REV.	ECN NO.	DATE	SIGN	DESCRIPTION
B	LEN13B0208~11	2013/08/08	Cary	Change Logo From LTW To Amphenol

ALTW DCC. DEPT. CONFIDENTIAL 2013.11.22 ISSUED

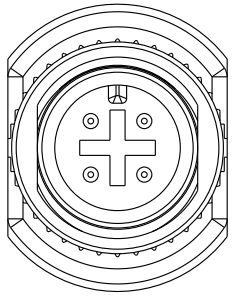

Conn.

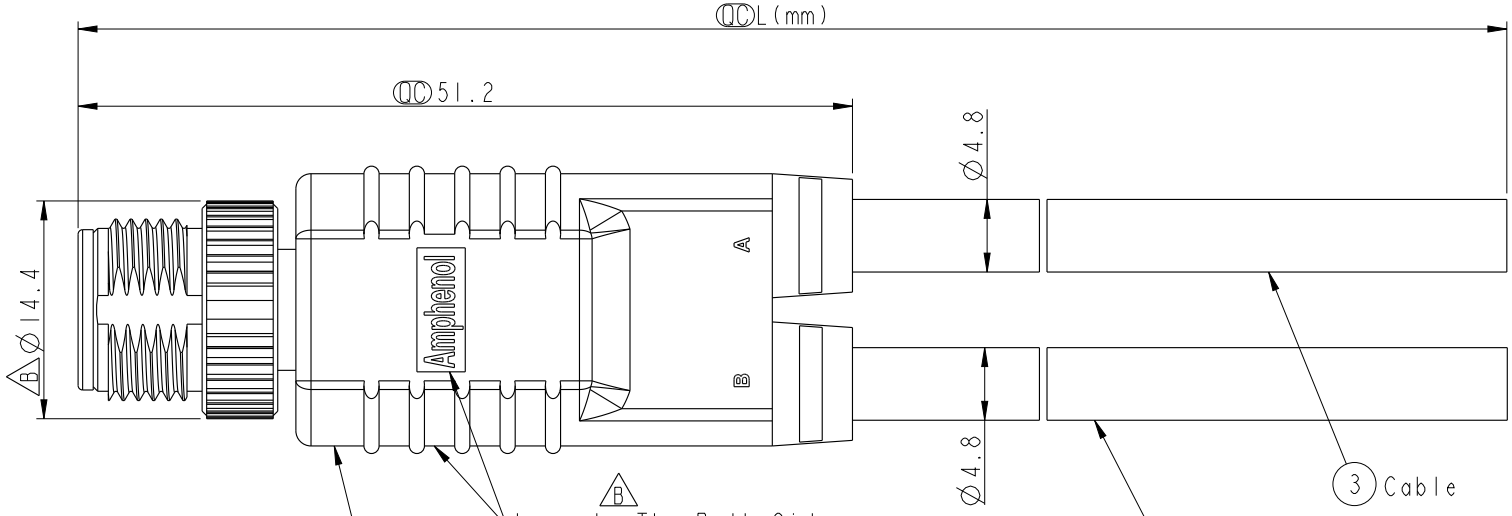

ALTW CONFIDENTIAL 2013-08-08 R&D DEPT.

SS-040000-M00-YSBXX

XX:01~99Meter
01:01Meter
02:02Meters
⋮
99:99Meters
Cable Length(L):01~99Meters

Note:
* QC Important Dimension To Check.
* Waterproof Rate:IP68
  IP68:1M Depth Of Water In 24hours.
* Housing:PU,Black
* Male Pin:Copper Alloy,Gold Plated.
* Cable: 22AWG*4C+INSULATION
  OD=4.8mm, Black
B * Cable Length Tolerance:01M:±40mm
  02M~05M:±60mm
  06M~10M:±100mm
  11M~30M:±200mm
  31M~99M:±500mm

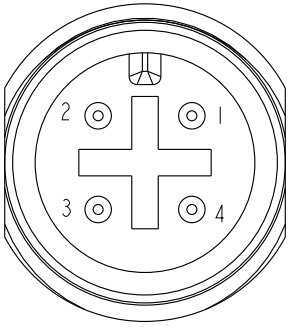

Pin Assignments
Front View

Conn.	A	B
4	Blue 藍	Blue 藍
3	White 白	White 白
2	Black 黑	Black 黑
1	Brown 棕	Brown 棕

Pin Out

UNIT:mm	TITLE: M12 Cable Screw 4Pin M Conn M Pin	ITEM NO	DRAWN BY: Cary_liu / DATE: 2013-08-08
TOLERANCE ±0.5mm	SCALE 2:1 / SIZE A4 / SHEET 1 OF 1	DWG NO: SS-040000-M00-YSBXX	CHECKED BY: Mafei / DATE: 2013-08-08
	REV. B / WC-REV. A.2 / QC:Inspection item	CUSTOMER: ALTW	APPROVED BY: Victor / DATE: 2013-08-08

Amphenol LTW
安費諾亮泰企業股份有限公司

FMW10702-01-02A1

THIS DOCUMENT IS SUBJECT TO CHANGE WITHOUT NOTICE. IT IS CONFIDENTIAL AND A PROPERTY OF Amphenol LTW. DISCLOSURE TO THIRD PARTY HAS TO BE AUTHORIZED BY Amphenol LTW.

sales@prom-elec.com / ООО ПРОМЭЛЕКТРОНИКА