Amphenol

Amphenol-Tuchel Electronics GmbH

Data sheet

heavy|mate® - C146 D Contact insert (for stamped crimp contacts)

Part No. **C146 10A015 000 2**

View represents all available contact positions.

Series Heavy duty connectors heavy|mate® - C 146

Subseries Heavy duty connector heavy|mate® - C146 D

COMMON CHARACTERISTICS		
No. of contacts		15 + PE
Contact arrangement (DIN)	DIN EN 60130-9	EN 175 301-801 (DIN 43652)
Type of contact		Stamped/rolled crimp contact
Max. cable diameter		4,1 mm
Weight male insert		28 g
Weight female insert		30 g
ELECTRICAL CHARACTERISTICS		
Rated voltage	DIN EN 60664-1 / IEC 60664-1	250 V~ (400 V~ bei modifizierter Kontaktanordnung) (600 V UL / CSA)
Rated impulse voltage	DIN EN 60664-1 / IEC 60664-1	4000V
Rated current at 40°C		12 A
Voltage proof	DIN EN 60512-2, Test 4a / IEC 60512-2, Test 4a	2.200 V
Installation category	DIN EN 60664-1 / IEC 60664-1	III
Insulation group	DIN EN 60664-1 / IEC 60664-1	III b
Insulation resistance	DIN EN 60512-2, Test 3a / IEC 60512-2, Test 3a	≥ 10^{12} Ω
Contact resistance	DIN EN 60512-2, Test 2a / IEC 60512-2 Test 2a	≤ 5 mΩ
Clearance	IEC 60664-1	> 3,5 mm
Creepage	IEC 60664-1	> 4,6 mm
Current carrying capacity	DIN EN 60512-3, Test 5b / IEC 60512-2 Test 5b	see derating curves
Pollution degree	DIN EN 60664-1 / IEC 60664-1	3
CLIMATICAL CHARACTERISTICS		
Climatic category	DIN EN 60068-1 / IEC 60068-1	40 / 125 / 21
Upper temperature		+ 125 °C / 1000 h
Lower temperatur		- 40 °C / 16 h
MECHANICAL CHARACTERISTICS		
IP degree of protection	DIN EN 60529 / IEC 60529	IP00 unmated
Insertion and withdrawal force	DIN EN 60512-13-2, Test 13b / IEC 60512-13-2, Test 13b	20-30 N
Mechanical lifetime	IEC 60512-5; Test 9 a	≥ 500 mating cycles
MATERIALS		
Insert		PC GV
Colour		grey
FURTHER CHARACTERISTICS		
Termination		crimp
Flammability	UL 94	V-0

250 V, 10 A

600 V, 10 A
600 V, 15 A (Hochstrom/ High Current)

600 V,10 A

Amphenol

Amphenol-Tuchel Electronics GmbH

heavy|mate® - C146 D Contact insert (for stamped crimp contacts)

Part No. **C146 10A015 000 2**

View represents all available contact positions.

Series	Heavy duty connectors heavy|mate® - C 146
Subseries	Heavy duty connector heavy|mate® - C146 D

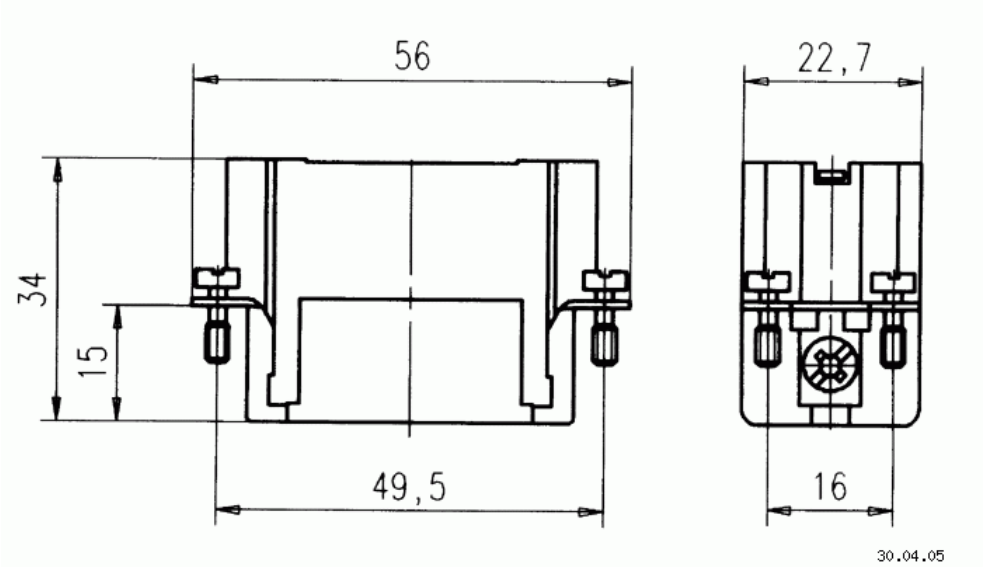

Drawing Dimensions in mm (Inch)

Amphenol

Amphenol-Tuchel Electronics GmbH

Data sheet

heavy|mate® - C146 D Contact insert (for stamped crimp contacts)

View represents all available contact positions.

Part No. **C146 10A015 000 2**

Series	Heavy duty connectors heavy|mate® - C 146
Subseries	Heavy duty connector heavy|mate® - C146 D

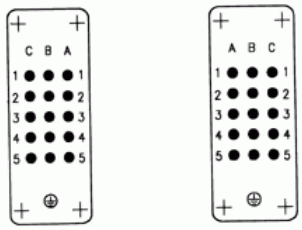
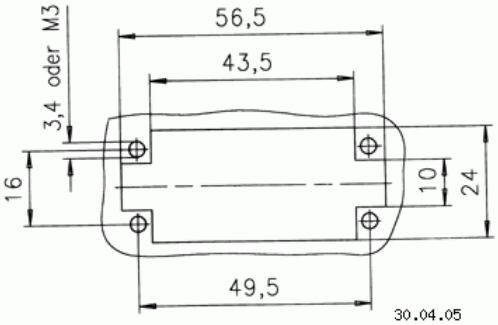
Contact arrangement