Weller®

WDC 2

Betriebsanleitung - Operating Instructions - Mode dèmploi - Istruzioni per lùso - Manual de uso - Manual do utilizador - Gebruiksaanwijzing - Instruktionsbok - Betjeningsvejledning - Käyttöohjeet - Οδηγίες Λειτουργίας- Kullanim kilavuzu - Návod k puziti - Instrukcja obslugi - Üzemeltetesi utasítás - Návod na pouzivanie - Navodila za uporabo - Kasutusjuhend - Naudojimo instrukcija - Lietosanas instrukcija - Ръководство за работа - Manual de exploatare - Naputak za rukovanje

---

DE	WDC 2 einsetzen
EN	Use WDC 2
FR	Utilisation de 2 WDC
IT	Impiego del WDC 2
ES	Colocar el WDC 2
PT	Inserir WDC 2
NL	WDC 2 inzetten
SV	Sätt in WDC 2
DK	Indsæt WDC 2
FI	WDC 2:n käyttö
GR	Τοποθέτηση της βάσης εναπόθεσης WDC 2
TR	WDC 2'nin takılması
CZ	Použít WDC 2
PL	Stosowanie WDC 2
HU	WDC 2 alkalmazása
SK	Použiť WDC 2
SL	uporabite WDC 2
EE	WDC 2 kasutamine
LV	Lietot WDC 2
LT	Įdėkite WDC 2
BG	Слагане на WDC 2
RO	Introducerea WDC 2
HR	Uporaba WDC 2

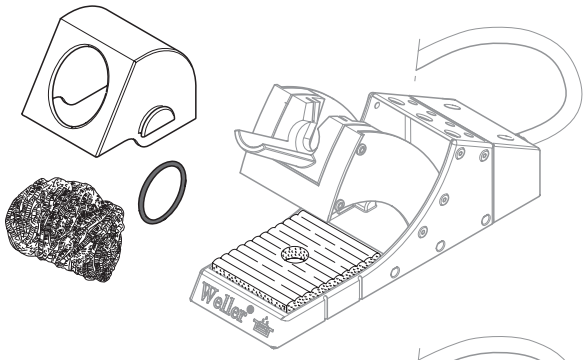

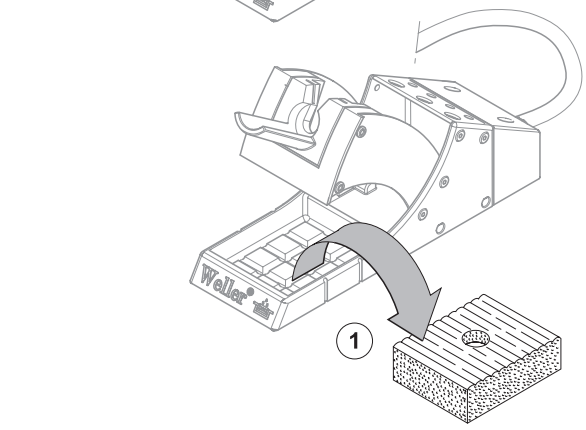

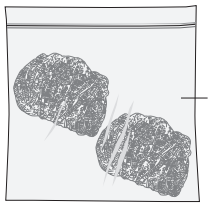

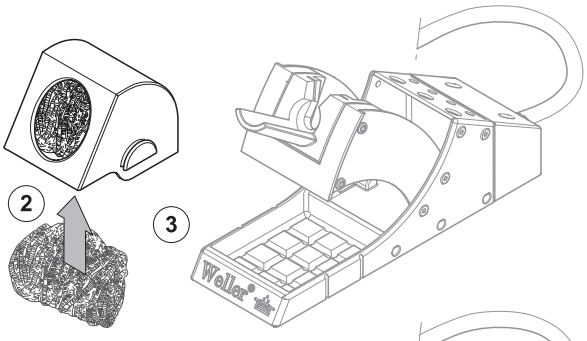

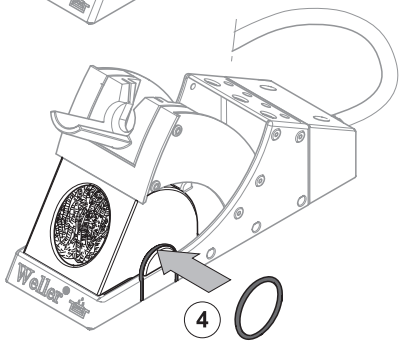

sales@prom-elec.com / ООО ПРОМЭЛЕКТРОНИКА

Weller®

DE	Lötwerkzeug reinigen
EN	Clean soldering iron
FR	Nettoyer l’outil de soudage
IT	Pulizia dell'utensile di saldatura
ES	Limpiar el soldador
PT	Limpeza da ferramenta de solda
NL	Soldeerwerktuig reinigen
SV	Rengör lödverktyg
DK	Rens loddeværktøj
FI	Juottotyökalun puhdistus
GR	Τοποθέτηση της βάσης εναπόθεσης WDC 2
TR	Lehim aletinin temizlenmesi
CZ	Vyčistit páječku
PL	Czyszczenie lutownicy
HU	forrasztószerszám tisztítása
SK	Vyčistiť spájkovačku
SL	očistite spajkala
EE	Jootekolvi puhastamine
LV	Tīrīt lodāmuru
LT	Išvalykite litavimo įrankį
BG	Почистване на поялния инструмент
RO	Curăţarea sculei de lipit
HR	Čišćenje lemila

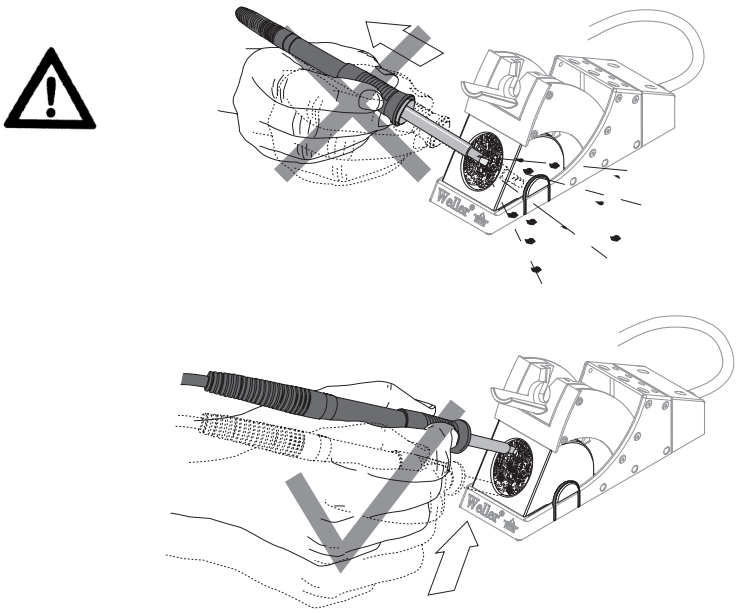

DE	Schaltablage reinigen
EN	Clean switching holder
FR	Nettoyer la plaque reposoir commutatrice
IT	Pulizia dell'unità di comando
ES	Limpiar el soporte de seguridad
PT	Limpeza da base de comutação
NL	Schakelhouder reinigen
SV	Rengör ställ med brytare
DK	Rens kolbeholder
FI	Kytkentätelineen puhdistus
GR	Τοποθέτηση της βάσης εναπόθεσης WDC 2
TR	Kumanda altlığının temizlenmesi
CZ	Vyčistit odkládací stojánek se spínáním
PL	Czyszczenie podstawki
HU	kapcsoló-lerakó tisztítása
SK	Vyčistiť odkladací stojan so spínaním
SL	očistite sklopno odlagališče
EE	Lülituspaneeli puhastamine
LV	Tīrīt paliktni
LT	Išvalykite dėklą
BG	Почистване на превключващата
RO	Curăţarea suportului cu
HR	Čišćenje stalka za uklapanje/isklapanje

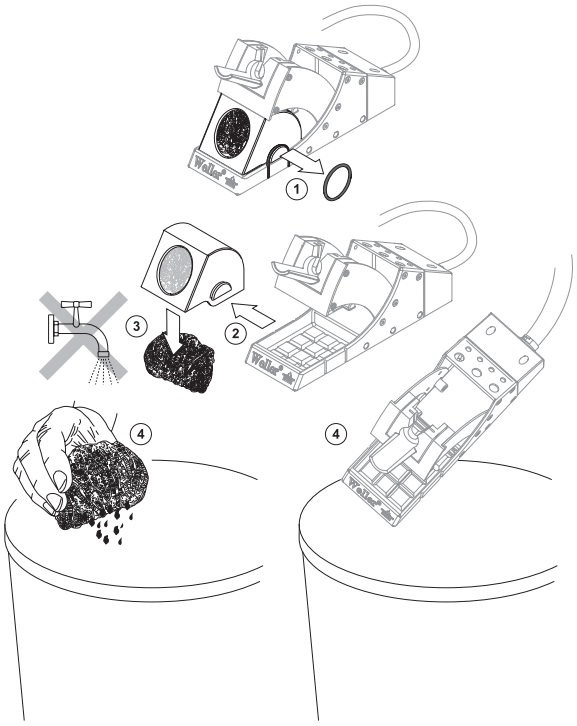

Weller Tools GmbH
Carl-Benz-Str. 2
74354 Besigheim, Germany
Phone: +49 (0) 7143 580-0

Apex Tool Group S.N.C.
25 av. Maurice Chevalier BP 46
77832 Ozoir-la-Ferrière Cedex (FR)
Phone : +33 (0) 1.64.43.22.00

Apex Tool Group (UK Operations) Ltd
4th Floor Pennine House
Washington, Tyne & Wear
NE37 1LY, Great Britain
Phone: +44 (0) 191 419 7700

Apex Tool S.r.l.
Viale Europa 80
20090 Cusago (MI), Italy
Phone: +39 (02) 90 33 101

Apex Tool Group, LLC
14600 York Rd. Suite A
Sparks, MD 21152, USA
Phone: +1 (800) 688-8949

The data specified above only serves to describe the product. No statements concerning a certain condition or suitability for a certain application can be derived from our information. The given information does not release the user from the obligation of own judgement and verification. It must be remembered that our products are subject to a natural process of wear and aging. © This document, as well as the data, specifications and other information set forth in it, are the exclusive property of Weller Tools GmbH. Without their consent it may not be reproduced or given to third parties. Subject to modifications. Printed in Germany.
Order No. T0055710205 – 05.2013
T0055710204 – 08.2011

Weller® is a registered Trademark and registered Design of Apex Tool Group, LLC
© 2013, Apex Tool Group, LLC