IP68 EMI/RFI General Purpose Enclosures
Technical Specification

Enhanced EMI/RFI protection is offered through the incorporation of a semi-conductive sealing mechanism which maintains conductivity between the lid and the enclosure, whilst preventing ingress of dust and water.

15 sizes are available, complete with silicone gasket, captive screws, earth screws and PCB guides on selected sizes. Nine sizes are also available with flanges for easy mounting.

Deltron Enclosures can customise any enclosure in our UK factory, including machining, painting, finishing, component sourcing and installation to meet your specification, save time and cut your costs. View our Services page on our website for more information.

For more information:

Phone: +44 (0)1724 273206

Features:

- Enhanced EMI/RFI Protection
- IP68 Rated
- Manufactured from ADC12
- Certified to BS EN 60529:1992
- Silicone Seal

Typical Applications:

- Marine
- Water Treatment
- Military
- Food Processing
- Aerospace

Available Dimensions:

89 x 35 x 31*	114 x 64 x 31*
114 x 89 x 56*	114 x 65 x 56*
172 x 121 x 56*	172 x 121 x 107*
222 x 146 x 56*	222 x 146 x 107
275 x 175 x 66	140 x 102 x 77*
165 x 127 x 77	120 x 100 x 36*
250 x 250 x 100	80 x 55 x 26
60 x 55 x 31	*= Available with Flanges

Finishes: Plain Aluminium, Powder or Nylon coat.
Coating Colours: Grey, Blue or Black.
Spares: Gaskets and Screws.

Or choose to have your enclosure customised for bespoke finishes and colours.

DELTRON Enclosures

DEM Manufacturing
Deltron Emcon House,
Hargreaves Way,
Sawcliffe Industrial Park,
Scunthorpe, DN15 8RF.

Web: www.dem-uk.com/deltron-enclosures
Tel: +44 (0) 1724 273206
Fax: +44 (0) 1724 280353
Email: sales@dem-uk.com

sales@prom-elec.com / ООО ПРОМЭЛЕКТРОНИКА

REV	DATE	ECN NUMBER	ECR COMMENT
003	06 Jun 2017	C03614	TORQUE SETTINGS ADDED

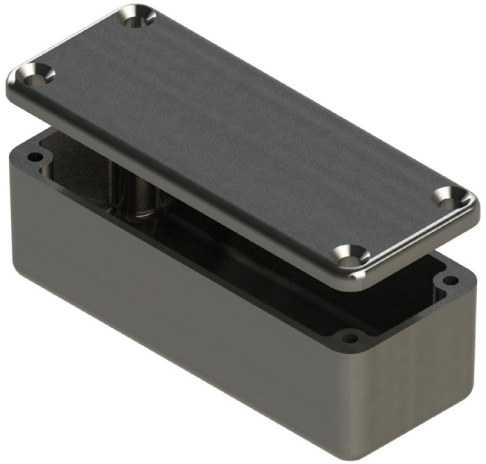

LENGTH	WIDTH	HEIGHT	SEAL	TORQUE SETTINGS	PLAIN	POWDER COAT	NYLON COAT
90	36	30	NONE	NONE	459-0010	461-0010*	462-0010*
			IP66	0.3Nm	460-0010	453-0010*	454-0010*
			IP68	0.7Nm	480-0010	481-0010*	482-0010*
			IP68 EMI/RFI	1.0Nm	480-C010	481-C010*	482-C010*
BOX DIMENSION IN MM			COLOUR OPTION - COLOUR SUFFIX * GREY=A / BLUE=B / BLACK = E				

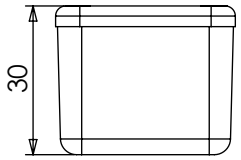

STANDARD DUTY ENCLOSURE

- Material grade ADC12/LM2 Die Cast Alloy
- IP Rated available
- Min wall thickness 1.5mm
- Min lid thickness 1.5mm
- Fine textured powder coating and smooth nylon
- Screws stainless steel
- IP68 Tested to 5 metres for 1 hour
- Enclosures can be supplied fully factory customised to your specification

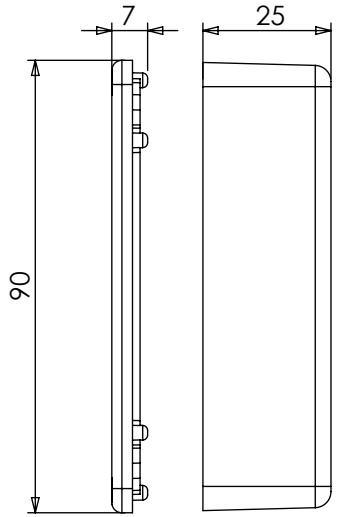

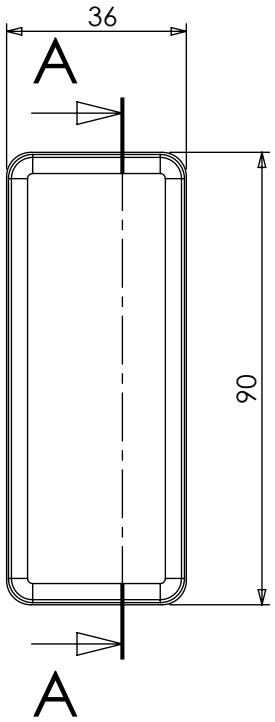

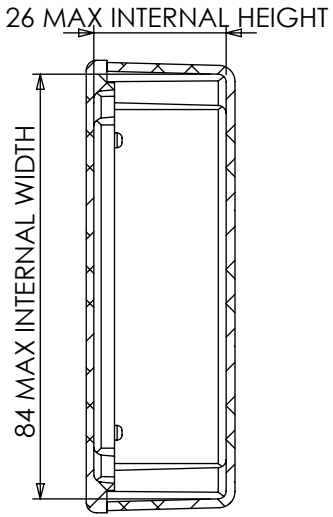

SECTION A-A

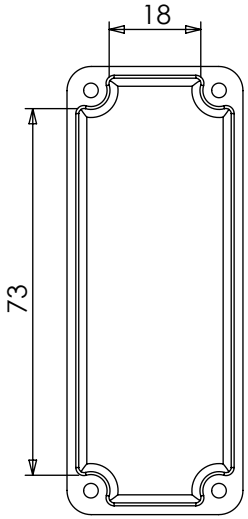

DELTRON Components | DELTRON Enclosures | ROXBURGH EMC | bes | DEM | Alpha3 manufacturing

+44(0)1724 273200 www.dem-uk.com

PROPRIETARY AND CONFIDENTIAL:

THE INFORMATION CONTAINED IN THIS DRAWING IS THE SOLE PROPERTY OF **ALPHA 3 MANUFACTURING**. ANY REPRODUCTION IN PART OR AS A WHOLE WITHOUT THE WRITTEN PERMISSION OF **ALPHA 3 MANUFACTURING** IS PROHIBITED.

DEM Manufacturing is a division of Alpha 3 Manufacturing LTD

DEM Manufacturing, Deltron Emcon House, Hargreaves Way, Sawcliffe Ind. Park, Scunthorpe, North Lincolnshire, DN15 8RF, UK

UNLESS OTHERWISE SPECIFIED DIMENSIONS ARE IN MILLIMETRES
LINEAR & RADIAL TOLERANCE:
NO DECIMAL PLACES
1 DECIMAL PLACE
2 DECIMAL PLACES
ANGULAR TOLERANCE:

IF IN DOUBT ASK! DO NOT SCALE DRAWING!

FINISH	SEE NOTES	AUTHOR	Alex Yau
MATERIAL	ALUMINIUM ALLOY	EDITOR	DT
		APPROVER	DT

THE FINISHED PRODUCT SHOULD BE CLEAN AND FREE FROM ALL LIQUIDS AND DEBRIS. SURFACES SHOULD BE OF UNIFORM APPEARANCE FREE FROM SHARP EDGES, BURRS AND CORROSION

THIRD ANGLE PROJECTION | SHEET 1 OF 1 | SCALE 1:1.5 | A4

TITLE	PLAIN ENCLOSURE		
FILE	A ENCLOSURE		
PART	BOX & LID ASSEMBLY		
ISSUE/REV.	003	VERSION	15
RELEASED		EDIT DATE	06 Jun 2017