LCD TFT Module Specification

Riverdi

Intelligent Display Solutions

RiTFT-35 series

3.5” EVE3 SERIES LCD TFT

Rev.1.0

2018-10-22

ITEM	CONTENTS	UNIT
LCD Type	TFT/Transmissive/Normally white	/
Size	3.5	Inch
Viewing Direction	12:00 (without image inversion)	O’ Clock
Gray Scale Inversion Direction	6:00	O’ Clock
Number of Dots	320 x (RGB) × 240	/
Driver IC	BT81x	/
Interface Type	SPI/QSPI	/
Module Memory Size	1 MB (BT81x) + 64 Mb (external flash)	/
Color Depth	16.7M	/
Pixel Arrangement	RGB Vertical Stripe	/
Surface Treatment	Anti-glare / Clear (for CTP)	/
Input Voltage	3.3	V

Note 1: RoHS, REACH SVHC compliant

Note 2: LCM weight tolerance: ± 5%.

sales@prom-elec.com / ООО ПРОМЭЛЕКТРОНИКА

REVISION RECORD

REVNO.	REVDATE	CONTENTS	REMARKS
1.0	2018-10-22	Initial Release	

CONTENTS

REVISION RECORD 2
CONTENTS 2
1 MODULE CLASSIFICATION INFORMATION 3
2 ASSEMBLY GUIDE - INTEGRATION 3
2.1 Mounting frame 4
3 MODULE DRAWING 4
4 ABSOLUTE MAXIMUM RATINGS 5
5 ELECTRICAL CHARACTERISTICS 5
6 BACKLIGHT CHARACTERISTICS 5
7 ELECTRO-OPTICAL CHARACTERISTICS 5
8 INTERFACE DESCRIPTION 7
9 BT8x CONTROLLER SPECIFICATIONS 8
9.1 Serial host interface 8
9.2 Block Diagram 8
9.3 Host interface SPI mode 0 9
9.4 Backlight driver block diagram 9
10 LCD TIMING CHARACTERISTICS 9
10.1 Clock and data input time diagram 9
10.2 Parallel RGB timing table 11
11 TOUCH SCREEN PANEL SPECIFICATIONS 11
11.1 Electrical characteristics 11
11.1.1 For capacitive touch panel 11
11.1.2 For resistive touch panel 12
11.2 Mechanical characteristics 12
11.2.1 For capacitive touch panel 12
11.2.2 For resistive touch panel 13
12 INSPECTION 13
12.1 Inspection condition 13
12.2 Inspection standard 14
13 RELIABILITY TEST 17
14 LEGAL INFORMATION 18

1 MODULE CLASSIFICATION INFORMATION

RV	T	35	A	H	B	x	W	x	00
1.	2.	3.	4.	5.	6.	7.	8.	9.	10.

1.	**BRAND**	**RV – Riverdi**
2.	**PRODUCT TYPE**	**T – TFT Standard** F – TFT Custom
3.	**DISPLAY SIZE**	**35 – 3.5”**
4.	**MODEL SERIAL NO.**	A (A-Z)
5.	**RESOLUTION**	**H– 320x240 px**
6.	**INTERFACE**	**B – TFT + Controller BT81x**
7.	**FRAME**	N – No Frame F – Mounting Frame
8.	**BACKLIGHT TYPE**	**W – LED White**
9.	**TOUCH PANEL**	N – No Touch Panel R – Resistive Touch Panel C – Capacitive Touch Panel
10.	**VERSION**	00 (00-99)

2 ASSEMBLY GUIDE - INTEGRATION

NAME OF THE PRODUCT	PART NUMBER	DESCRIPTION
RiTFT-35	RVT35AHBNWN00	BT816, no touch panel
RiTFT-35-RES	RVT35AHBNWR00	BT816, resistive touch panel
RiTFT-35-CAP	RVT35AHBNWC00	BT815, capacitive touch panel
RiTFT-35-FR	RVT35AHBFWN00	BT816, no touch panel, mounting frame
RiTFT-35-RES-FR	RVT35AHBFWR00	BT816, resistive touch panel, mounting frame
RiTFT-35-CAP-FR	RVT35AHBFWC00	BT815, capacitive touch panel, mounting frame

2.1 Mounting frame

For dimensions 3.5”, 4.3”, 5.0” and 7.0” the product with mounting frame version is available. Thanks to the four catches attached to the side, frame provides strong assembly to the surface by mounting element (like the screw, see Figure 3). The frames are specially designed to fit Riverdi products perfectly. The diameter of the mounting hole is 3.5mm.

Figure 1. Mounting frame

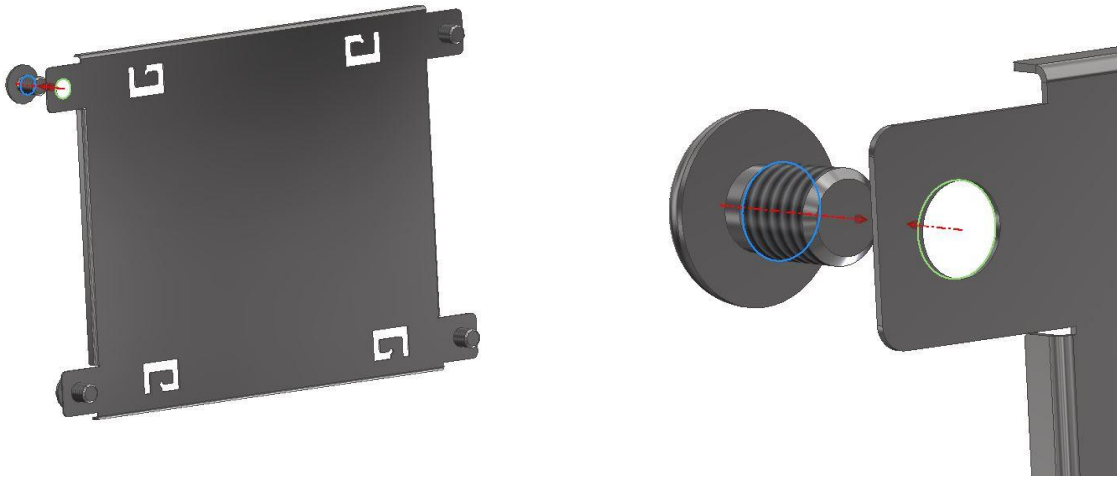

RiTFT-35

Revision:	Changes:	Date:
1.0	Initial Case	30.11.2018

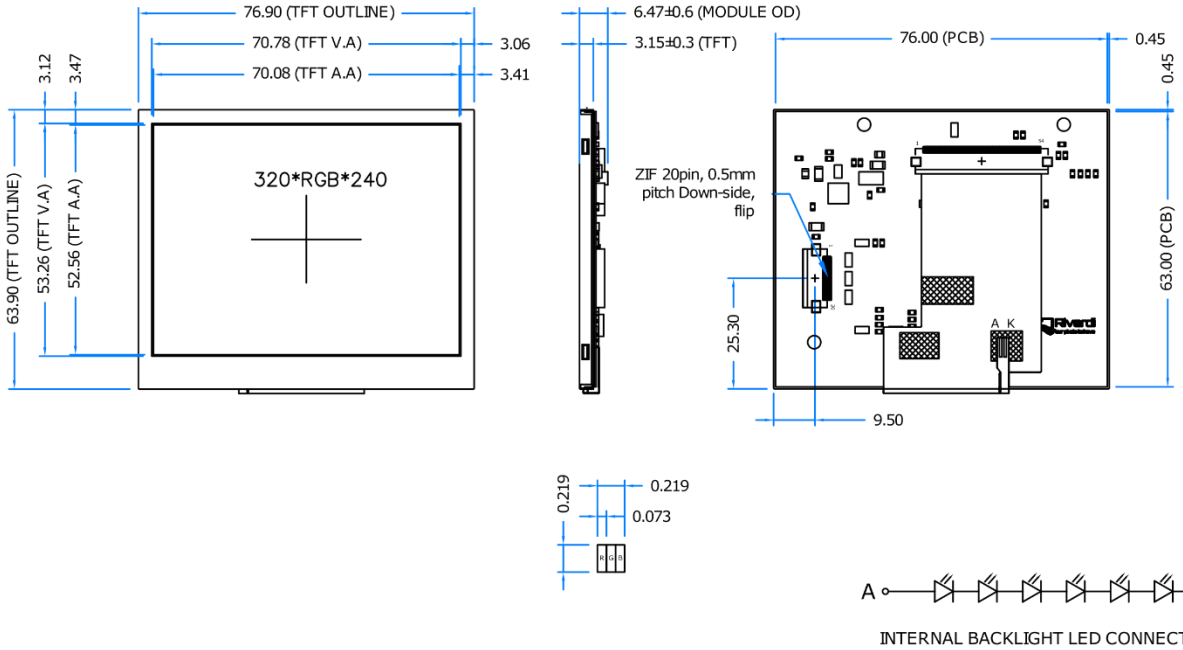

INTERNAL BACKLIGHT LED CONNECTION

PIN	DESC
1	VDD
2	GND
3	SPI_SCLK
4	MISO/IO1
5	MOSI/IO0
6	CS
7	INT
8	PD
9	NC
10	AUDIO_OUT
11	GPIO0/IO2
12	GPIO1/IO3
13	GPIO2
14	GPIO3
15	NC
16	NC
17	BLVDD
18	BLVDD
19	BLGND
20	BLGND

GENERAL NOTES:

1. DISPLAY TYPE: TFT, TRANSMISSIVE, NORMALLY WHITE
2. OPERATION VOLTAGE: VDD=3.3V
3. VIEWING DIRECTION: 12 O'CLOCK
4. IC CONTROLLER: BT816
5. OPERATING TEMP.: -20ºC ~70ºC
6. STORAGE TEMP.: -30ºC ~80ºC
7. LED BACKLIGHT: 6-LED WHITE, BUILT-IN INVERTER
8. SURFACE LUMINANCE: 540 cd/m^2
9. GENERAL TOLERANCE: ±0.2
10. RoHS COMPLIANT

PN: RVT35AHBNWN00			
SN: ####			
DRAWN: P.M.	12/07/18	1:1.00	
CHECKED:		[mm]	
APPR:		ISO A3	P. 1 of 1

Revision:	Changes:	Date:
1.0	Initial Case	30.11.2018

RiTFT-35-FR

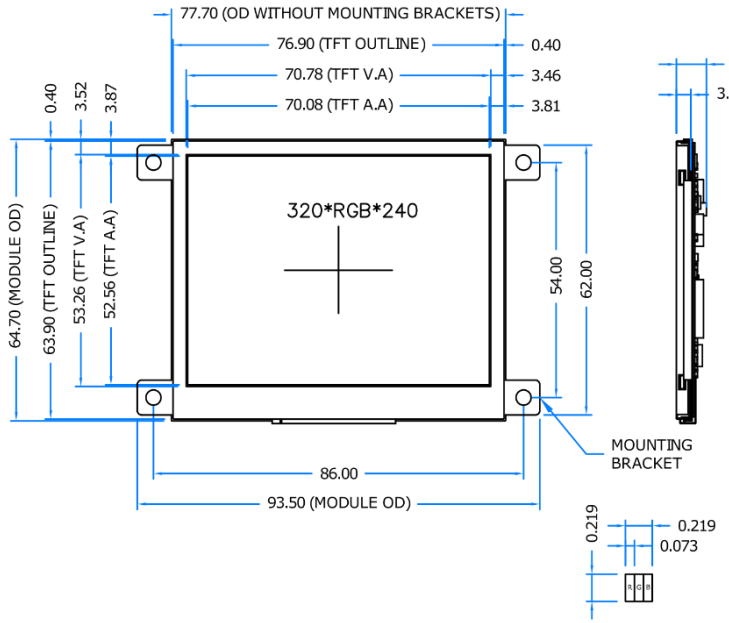

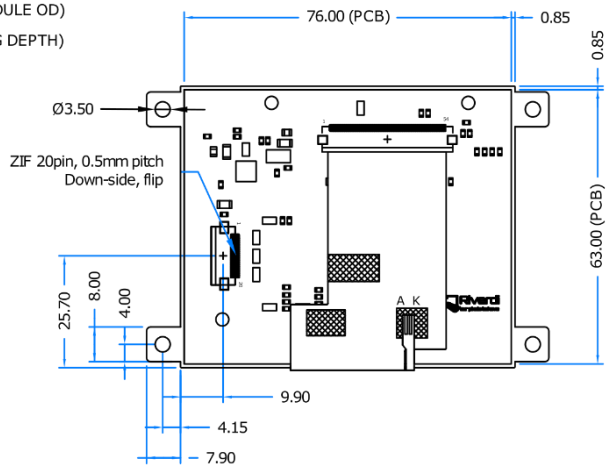

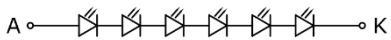

INTERNAL BACKLIGHT LED CONNECTION

PIN	DESC
1	VDD
2	GND
3	SPI_SCLK
4	MISO/IO1
5	MOSI/IO0
6	CS
7	INT
8	PD
9	NC
10	AUDIO_OUT
11	GPIO0/IO2
12	GPIO1/IO3
13	GPIO2
14	GPIO3
15	NC
16	NC
17	BLVDD
18	BLVDD
19	BLGND
20	BLGND

GENERAL NOTES:

1. DISPLAY TYPE: TFT, TRANSMISSIVE, NORMALLY WHITE
2. OPERATION VOLTAGE: VDD=3.3V
3. VIEWING DIRECTION: 12 O'CLOCK
4. IC CONTROLLER: BT816
5. OPERATING TEMP.: -20℃ ~70℃
6. STORAGE TEMP.: -30℃ ~80℃
7. LED BACKLIGHT: 6-LED WHITE, BUILT-IN INVERTER
8. SURFACE LUMINANCE: 540 cd/m^2
9. GENERAL TOLERANCE: ±0.2
10. RoHS COMPLIANT

PN: RVT35AHBFWN00			
SN: ####			
DRAWN: P.M.	12/07/18	1:1.00	
CHECKED:		[mm]	
APPR:		ISO A3	P. 1 of 1

Revision:	Changes:	Date:
1.0	Initial Case	29.11.2018

RiTFT-35-CAP

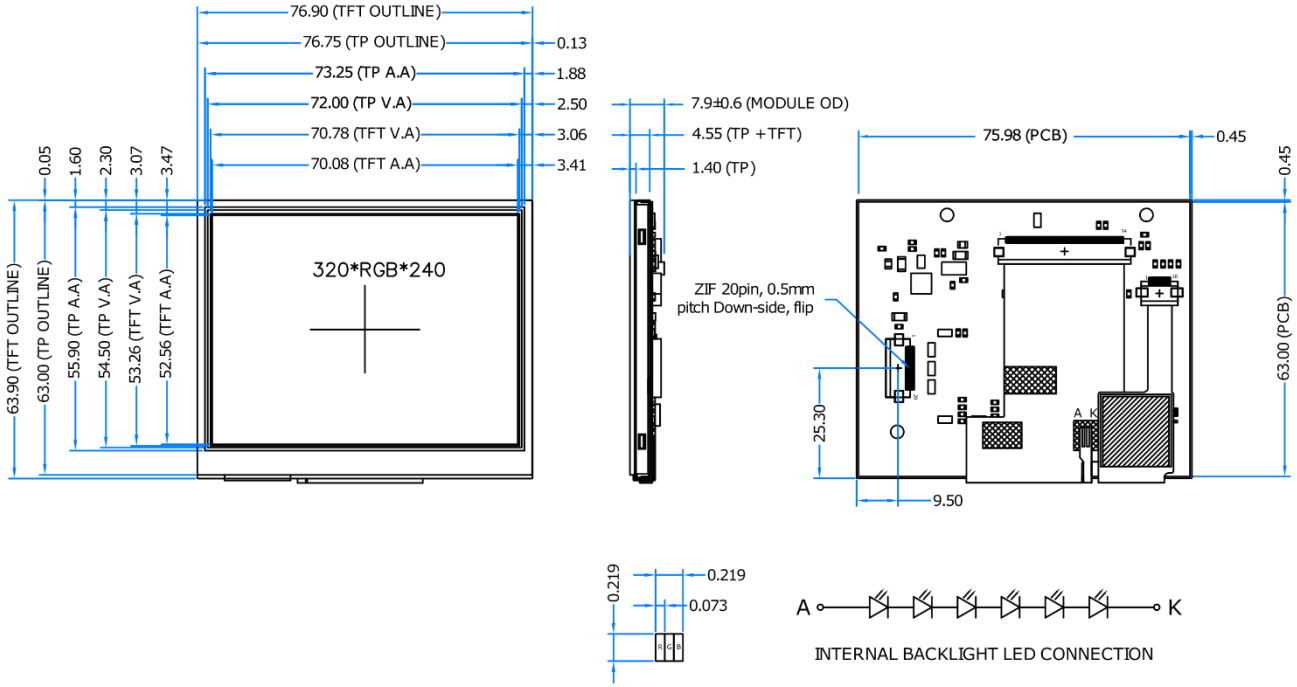

PIN	DESC
1	VDD
2	GND
3	SPI_SCLK
4	MISO/IO1
5	MOSI/IO0
6	CS
7	INT
8	PD
9	NC
10	AUDIO_OUT
11	GPIO0/IO2
12	GPIO1/IO3
13	GPIO2
14	GPIO3
15	NC
16	NC
17	BLVDD
18	BLVDD
19	BLGND
20	BLGND

GENERAL NOTES:

1. DISPLAY TYPE: TFT, TRANSMISSIVE, NORMALLY WHITE
2. OPERATION VOLTAGE: VDD=3.3V
3. VIEWING DIRECTION: 12 O'CLOCK
4. IC CONTROLLER: BT815
5. OPERATING TEMP.: -20ºC ~70ºC
6. STORAGE TEMP.: -30ºC ~80ºC
7. LED BACKLIGHT: 6-LED WHITE, BUILT-IN INVERTER
8. SURFACE LUMINANCE: 480 cd/m^2
9. GENERAL TOLERANCE: ±0.2
10. RoHS COMPLIANT

PN: RVT35AHBNWC00			
SN: ####			
DRAWN: P.M.	12/07/18	1:1.00	
CHECKED:		[mm]	
APPR:		ISO A3	P. 1 of 1

Revision:	Changes:	Date:
1.0	Initial Case	29.11.2018

RiTFT-35-CAP-FR

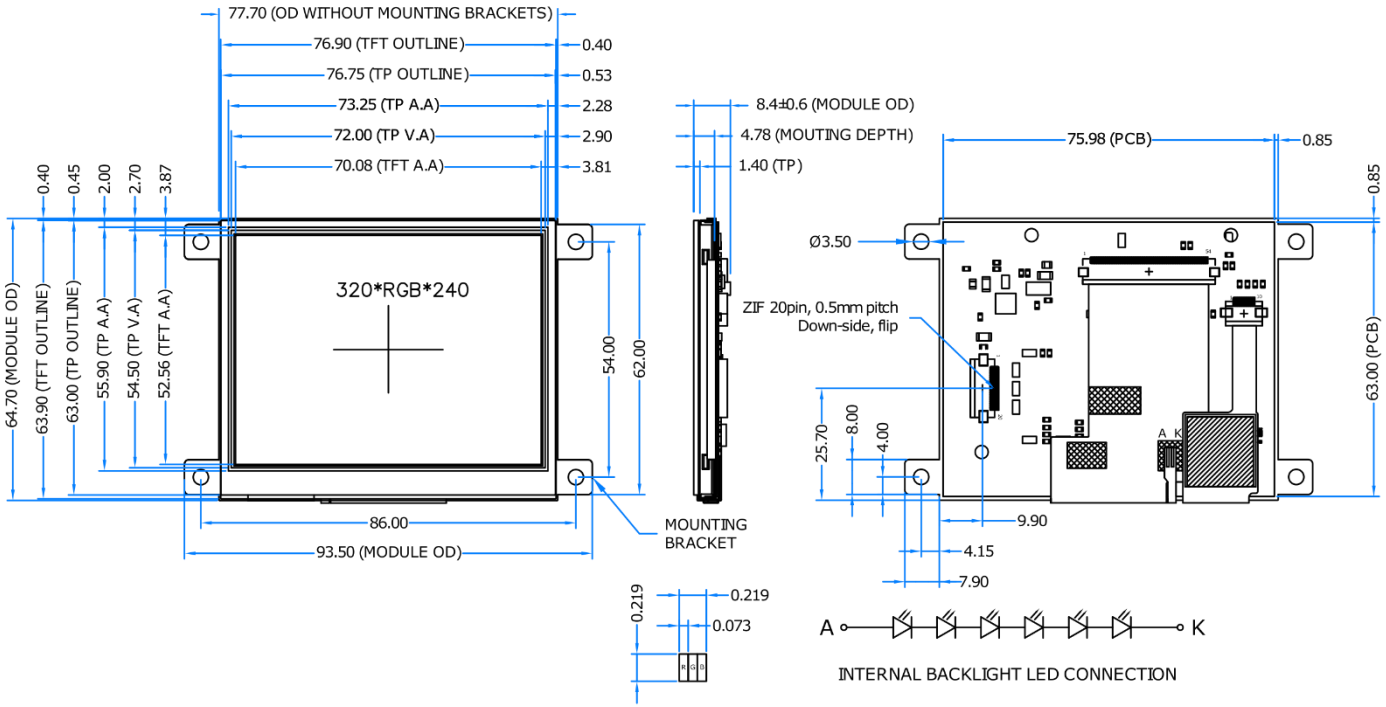

PIN	DESC
1	VDD
2	GND
3	SPI_SCLK
4	MISO/IO1
5	MOSI/IO0
6	CS
7	INT
8	PD
9	NC
10	AUDIO_OUT
11	GPIO0/IO2
12	GPIO1/IO3
13	GPIO2
14	GPIO3
15	NC
16	NC
17	BLVDD
18	BLVDD
19	BLGND
20	BLGND

GENERAL NOTES:

1. DISPLAY TYPE: TFT, TRANSMISSIVE, NORMALLY WHITE
2. OPERATION VOLTAGE: VDD=3.3V
3. VIEWING DIRECTION: 12 O'CLOCK
4. IC CONTROLLER: BT815
5. OPERATING TEMP.: -20ºC ~70ºC
6. STORAGE TEMP.: -30ºC ~80ºC
7. LED BACKLIGHT: 6-LED WHITE, BUILT-IN INVERTER
8. SURFACE LUMINANCE: 480 cd/m^2
9. GENERAL TOLERANCE: ±0.2
10. RoHS COMPLIANT

PN: RVT35AHBFWC00			
SN: ####			
DRAWN: P.M.	12/07/18	1:1.00	
CHECKED:		[mm]	
APPR:		ISO A3	P. 1 of 1

RiTFT-35-RES

Revision:	Changes:	Date:
1.0	Initial Case	30.11.2018

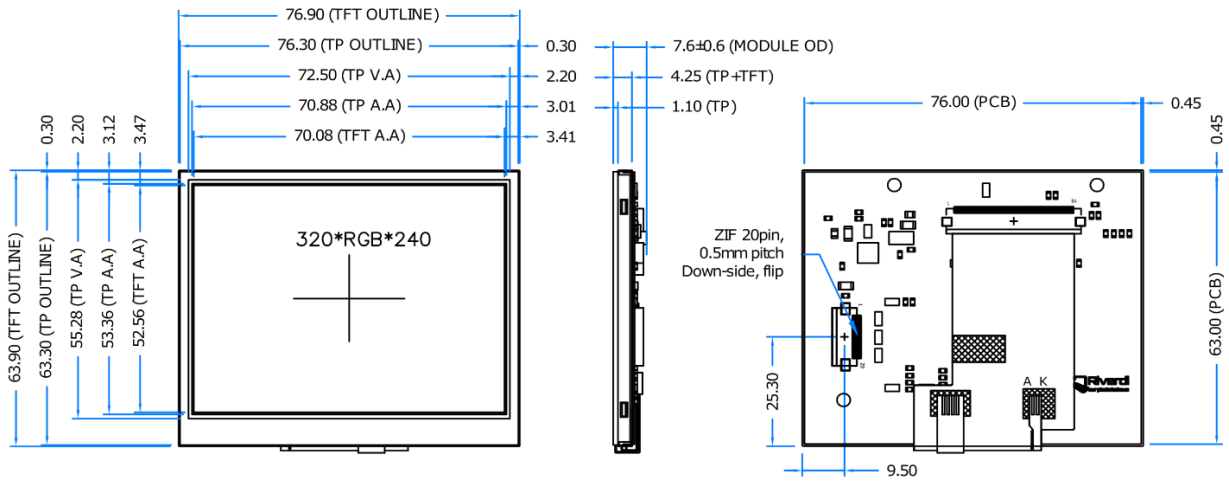

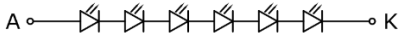

INTERNAL BACKLIGHT LED CONNECTION

PIN	DESC
1	VDD
2	GND
3	SPI_SCLK
4	MISO/IO1
5	MOSI/IO0
6	CS
7	INT
8	PD
9	NC
10	AUDIO_OUT
11	GPIO0/IO2
12	GPIO1/IO3
13	GPIO2
14	GPIO3
15	NC
16	NC
17	BLVDD
18	BLVDD
19	BLGND
20	BLGND

GENERAL NOTES:

1. DISPLAY TYPE: TFT, TRANSMISSIVE, NORMALLY WHITE
2. OPERATION VOLTAGE: VDD=3.3V
3. VIEWING DIRECTION: 12 O'CLOCK
4. IC CONTROLLER: BT816
5. OPERATING TEMP.: -20℃ ~ 70℃
6. STORAGE TEMP.: -30℃ ~ 80℃
7. LED BACKLIGHT: 6-LED WHITE, BUILT-IN INVERTER
8. SURFACE LUMINANCE: 450 cd/m^2
9. GENERAL TOLERANCE: ±0.2
10. RoHS COMPLIANT

PN: RVT35AHBNWR00			
SN: ####			
DRAWN: P.M.	12/3/2018	1:1.00	
CHECKED:		[mm]	
APPR:		ISO A3	P. 1 of 1

RiTFT-35-RES-FR

Revision:	Changes:	Date:
1.0	Initial Case	30.11.2018

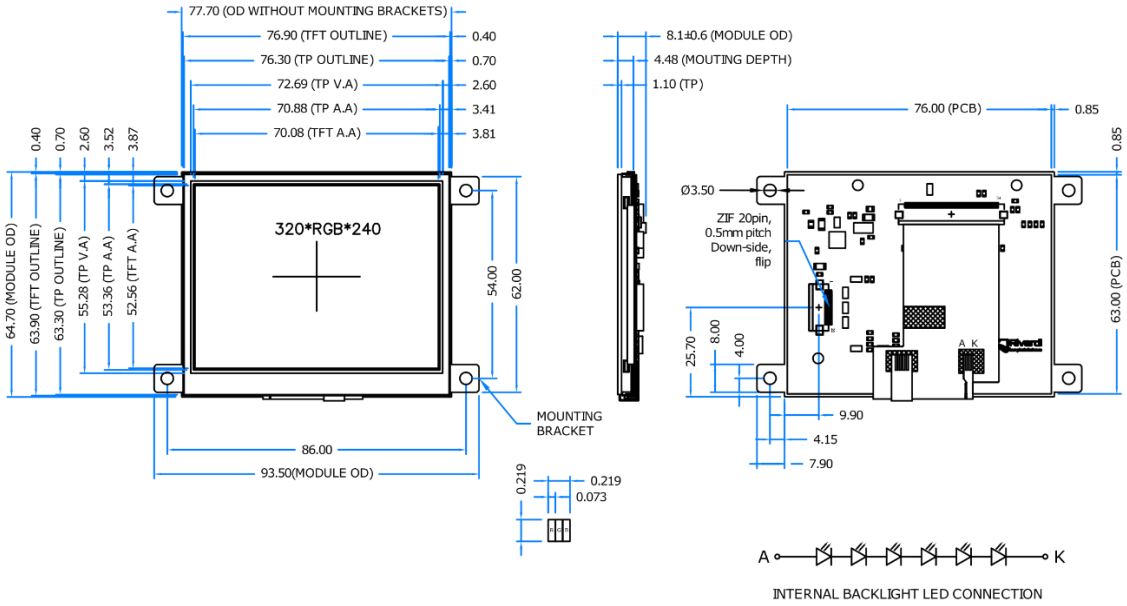

PIN	DESC
1	VDD
2	GND
3	SPI_SCLK
4	MISO/IO1
5	MOSI/IO0
6	CS
7	INT
8	PD
9	NC
10	AUDIO_OUT
11	GPIO0/IO2
12	GPIO1/IO3
13	GPIO2
14	GPIO3
15	NC
16	NC
17	BLVDD
18	BLVDD
19	BLGND
20	BLGND

GENERAL NOTES:

1. DISPLAY TYPE: TFT, TRANSMISSIVE, NORMALLY WHITE
2. OPERATION VOLTAGE: VDD=3.3V
3. VIEWING DIRECTION: 12 O'CLOCK
4. IC CONTROLLER: BT816
5. OPERATING TEMP.: -20℃ ~70℃
6. STORAGE TEMP.: -30℃ ~80℃
7. LED BACKLIGHT: 6-LED WHITE, BUILT-IN INVERTER
8. SURFACE LUMINANCE: 450 cd/m^2
9. GENERAL TOLERANCE: ±0.2
10. RoHS COMPLIANT

PN: RVT35AHBFWR00			
SN: ####			
DRAWN: P.M.	12/07/18	1:1.00	
CHECKED:		[mm]	
APPR:		ISO A3	P. 1 of 1

4 ABSOLUTE MAXIMUM RATINGS

PARAMETER	SYMBOL	MIN	MAX	UNIT
Supply Voltage for Logic	VDD	0	4.0	V
Supply Voltage for LED Inverter	BLVDD	0	7.0	V
Input Voltage for Logic	VIN	0	4.0	V
LED forward current (each LED)	IF	-	25	mA
Operating Temperature	T_{OP}	-20	70	°C
Storage Temperature	T_{ST}	-30	80	°C
Humidity	RH	-	90% (Max 60°C)	RH

5 ELECTRICAL CHARACTERISTICS

PARAMETER	SYMBOL	MIN	TYP	MAX	UNIT	NOTES
Supply Voltage For Module	VDD	3.0	3.3	3.6	V	
Input Voltage for LED Inverter	BLVDD	2.8	5.0	5.5	V	
LED Backlight Current	$IDD_{backlight}$	-	150	187	mA	BLVDD=3.3V
LED Backlight Current	$IDD_{backlight}$	-	93	117	mA	BLVDD=5V
Input Voltage ' H ' level	V_{IH}	0.7VDD	-	VDD	V	
Input Voltage ' L ' level	V_{IL}	0	-	0.2VDD	V	
Input Current	I_{In}		TBD		mA	
Input Current for module with CTP	I_{InC}		TBD		mA	

Note: The LED life time is defined as the module brightness decrease to 50% original brightness at Ta=25°C.

6 BACKLIGHT CHARACTERISTICS

ITEM	SYMBOL	MIN	TYP	MAX	UNIT
Voltage for LED backlight	V_I	-	19.2	20.4	V
Current for LED backlight	I_I	-	20	25	mA
LED Life Time	-	30000	50000	-	Hrs

Note: The LED Supply Voltage is defined by the numbers of LED at Ta=25°C and I_L= 20mA.

7 ELECTRO-OPTICAL CHARACTERISTICS

ITEM		SYMBOL	CONDITION	MIN	TYP	MAX	UNIT	REMARK	NOTE
Response Time		Tr+Tf	θ=0° Ø=0° Ta=25	-	25	30	ms	Figure 2	4
Contrast Ratio		Cr		-	350	-	---	Figure 3	1
Luminance Uniformity		δ WHITE		75	80	-	%	Figure 3	3
Surface Luminance	TFT	Lv		490	540	-	cd/m²	Figure 3	2
	TFT+CTP			440	490	-			
	TFT+RTP			400	440	-			
Viewing Angle Range		θ	Ø = 90°	30	40	-	deg	Figure 4	6
			Ø = 270°	50	60	-	deg	Figure 4	
			Ø = 0°	50	60	-	deg	Figure 4	
			Ø = 180°	50	60	-	deg	Figure	
CIE (x, y) Chromaticity	Red	x	θ=0° Ø=0° Ta=25	0.574	0.624	0.674		Figure 3	5
		y		0.318	0.368	0.418			
	Green	x		0.300	0.350	0.400			
		y		0.500	0.550	0.600			
	Blue	x		0.093	0.143	0.193			
		y		0.069	0.119	0.169			
	White	x		0.260	0.310	0.360			
		y		0.283	0.333	0.383			

Note 1. Contrast Ratio(CR) is defined mathematically as below, for more information see Figure .

$$\text{Contrast Ratio} = \frac{\text{Average Surface Luminance with all white pixels (P1, P2, P3, P4, P5)}}{\text{Average Surface Luminance with all black pixels (P1, P2, P3, P4, P5)}}$$

Note 2. Surface luminance is the LCD surface from the surface with all pixels displaying white. For more information, see Figure .

Lv = Average Surface Luminance with all white pixels (P1, P2, P3, P4, P5)

Note 3. The uniformity in surface luminance δ WHITE is determined by measuring luminance at each test position 1 through 5, and then dividing the maximum luminance of 5 points luminance by minimum luminance of 5 points luminance. For more information, see Figure .

$$\delta\ \text{WHITE} = \frac{\text{Minimum Surface Luminance with all white pixels (P1, P2, P3, P4, P5)}}{\text{Maximum Surface Luminance with all white pixels (P1, P2, P3, P4, P5)}}$$

Note 4. Response time is the time required for the display to transition from white to black (Rise Time, Tr) and from black to white (Decay Time, Tf). For additional information see FIG 1. The test equipment is Autronic-Melchers's ConoScope series.

Note 5. CIE (x, y) chromaticity, the x, y value is determined by measuring luminance at each test position 1 through 5, and then make average value.

Note 6. Viewing angle is the angle at which the contrast ratio is greater than 2. For TFT module the contrast ratio is greater than 10. The angles are determined for the horizontal or x axis and the vertical or y axis with respect to the z axis which is normal to the LCD surface. For more information see Figure .

Note 7. For viewing angle and response time testing, the testing data is based on Autronic-Melchers's ConoScope series. Instruments for Contrast Ratio, Surface Luminance, Luminance Uniformity, CIE the test data is based on TOPCON's BM-5 photo detector.

Note 8. For TFT module, Gray scale reverse occurs in the direction of panel viewing angle.

Figure 2. The definition of response time

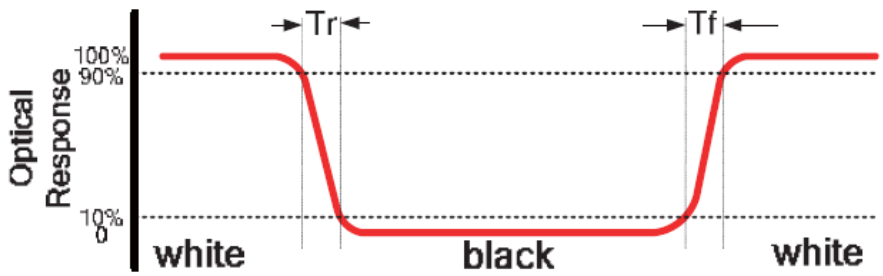

Figure 3. Measuring method for Contrast ratio, surface luminance, Luminance uniformity, CIE (x, y) chromaticity

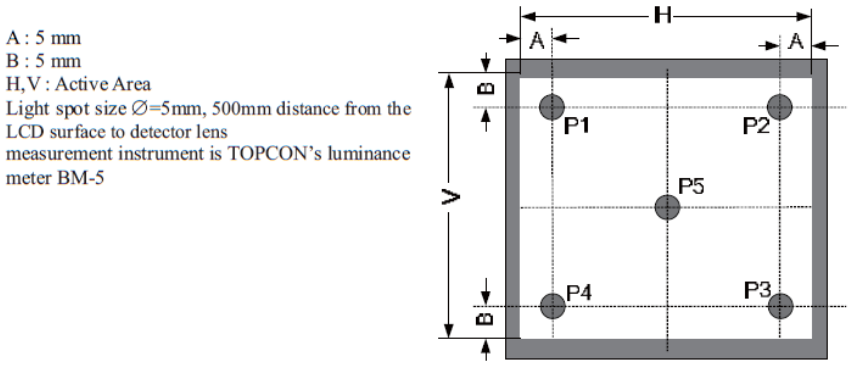

Figure 4.The definition of viewing angle

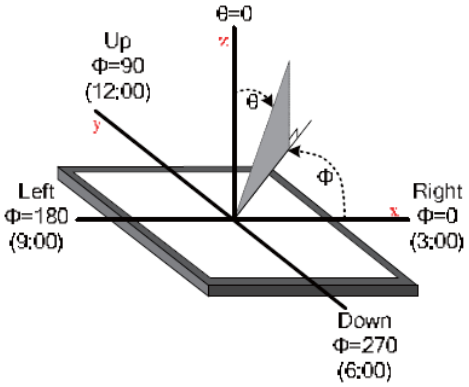

8 INTERFACE DESCRIPTION

PIN NO.	SYMBOL	DESCRIPTION
1	VDD	Power Supply
2	GND	Ground
3	SPI_SCLK	SPI SCK Signal, Internally 47k Pull UP
4	MISO/ IO1	SPI MISO Signal / SPI Quad mode: SPI data line 1
5	MOSI/ IO0	SPI MOSI Signal / SPI Quad mode: SPI data line 0
6	CS	SPI Chip Select Signal , Internally 47k Pull UP
7	INT	Interrupt Signal, Active Low, Internally 47k Pull UP
8	PD	Power Down Signal, Active Low, Internally 47k Pull UP
9	NC	Not Connected
10	AUDIO_OUT	Audio Out Signal
11	GPIO0/IO2	SPI Single mode: General purpose IO0/ SPI Quad mode: SPI data line 2
12	GPIO1/IO3	SPI Single mode: General purpose IO1/ SPI Quad mode: SPI data line 3
13	GPIO2	General purpose IO2
14	GPIO3	General purpose IO3 or analog input for ADC
15	NC	Not Connected
16	NC	Not Connected
17	BLVDD	Backlight Power Supply, Can Be Connected to VDD
18	BLVDD	Backlight Power Supply, Can Be Connected to VDD
19	BLGND	Backlight Ground, Internally connected to GND
20	BLGND	Backlight Ground, Internally connected to GND

9 BT8x CONTROLLER SPECIFICATIONS

BT8x or EVE3 (Embedded Video Engine 3) simplifies the system architecture for advanced human machine interfaces (HMIs) by providing functionality for display, audio, and touch as well as an object oriented architecture approach that extends from display creation to the rendering of the graphics.

9.1 Serial host interface

Figure 5.SPI interface connection

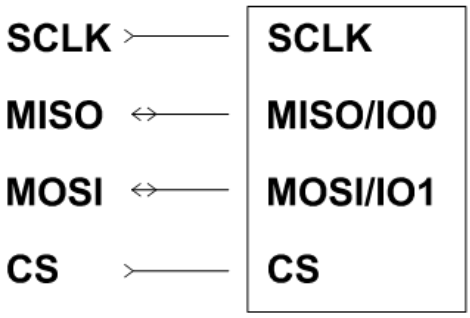

Figure 6. QSPI interface connection

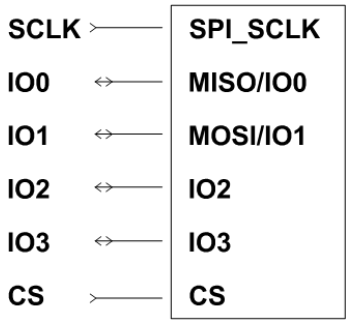

SPI Interface – the SPI slave interface operates up to 30MHz.

Only SPI mode 0 is supported. The SPI interface is selected by default (MODE pin is internally pulled low by 47k resistor).

9.2 Block Diagram

Figure 7.. BT8x Block diagram

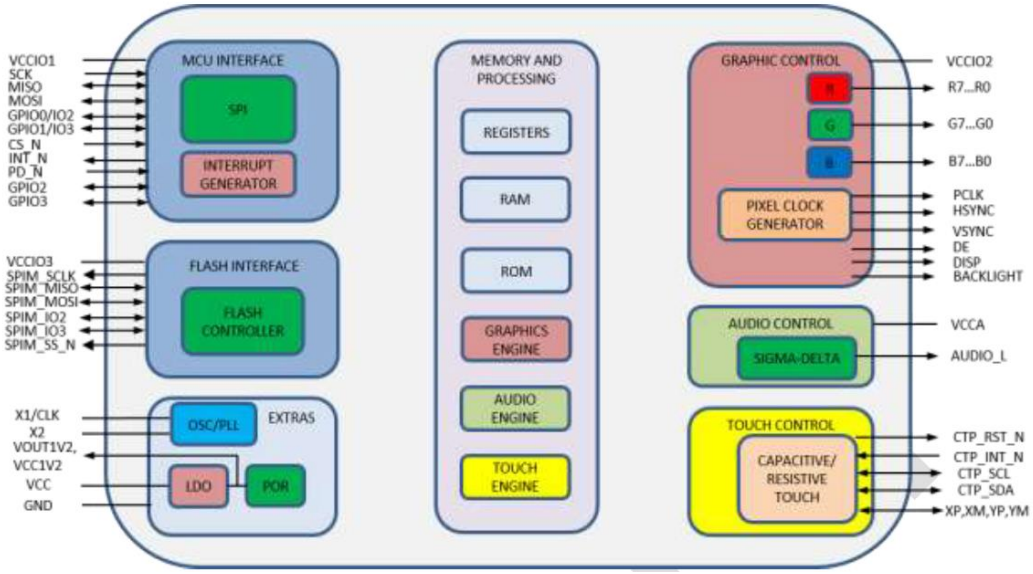

9.3 Host interface SPI mode 0

Figure 8. SPI timing diagram

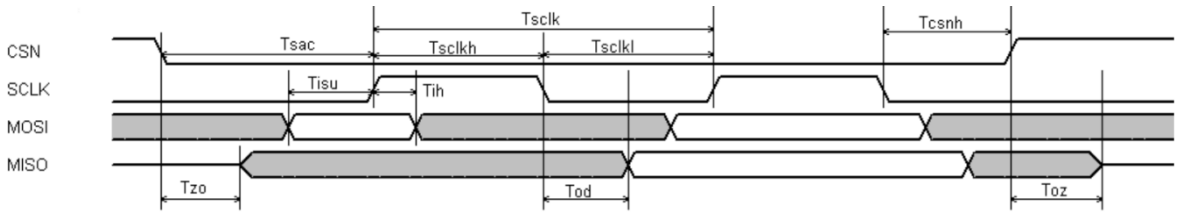

For more information about BT8x controller please go to official BT8x website.

https://www.ftdichip.com/Products/ICs/BT81X.html

9.4 Backlight driver block diagram

Backlight enable signal is internally connected to BT8x Backlight control pin. This pin is controlled by two BT8x's registers. One of them specifies the PWM output frequency, second one specifies the duty cycle. Refer to BT8x datasheet for more information.

Figure 9. Backlight driver block diagram

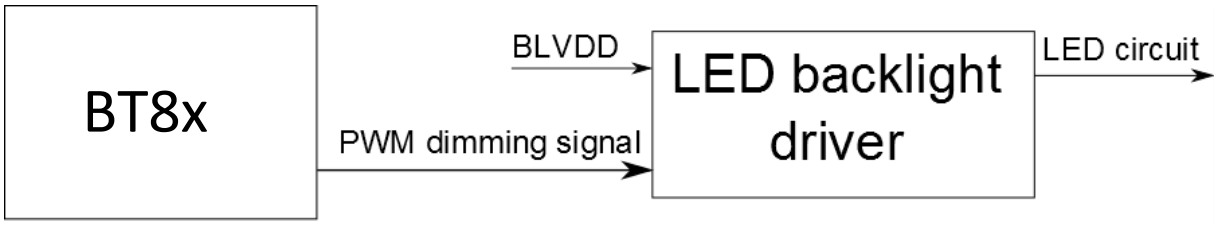

10 LCD TIMING CHARACTERISTICS

10.1 Clock and data input time diagram

Figure 10. DE mode timing diagram

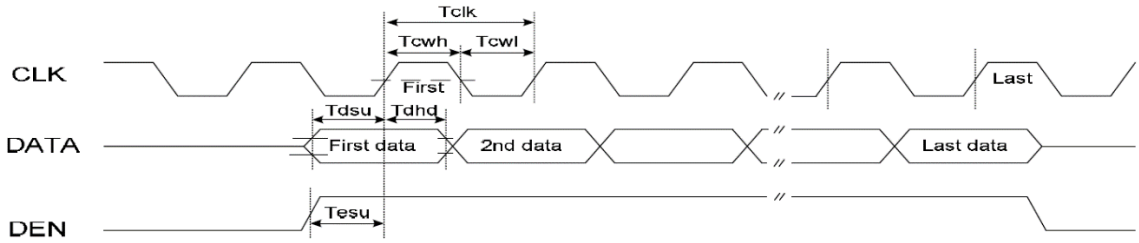

Figure 11. SYNC mode timing diagram

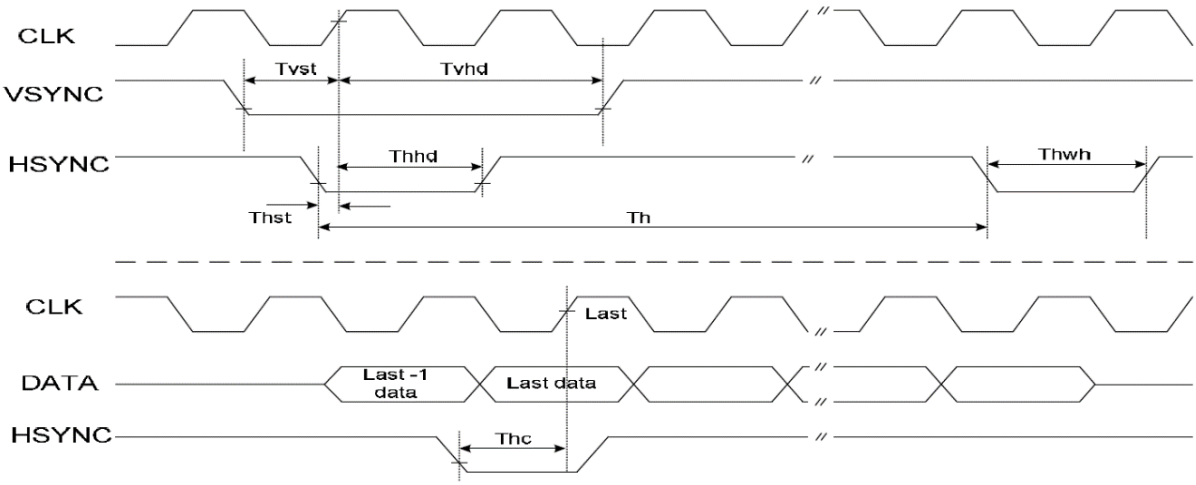

Figure 12. Timing diagram

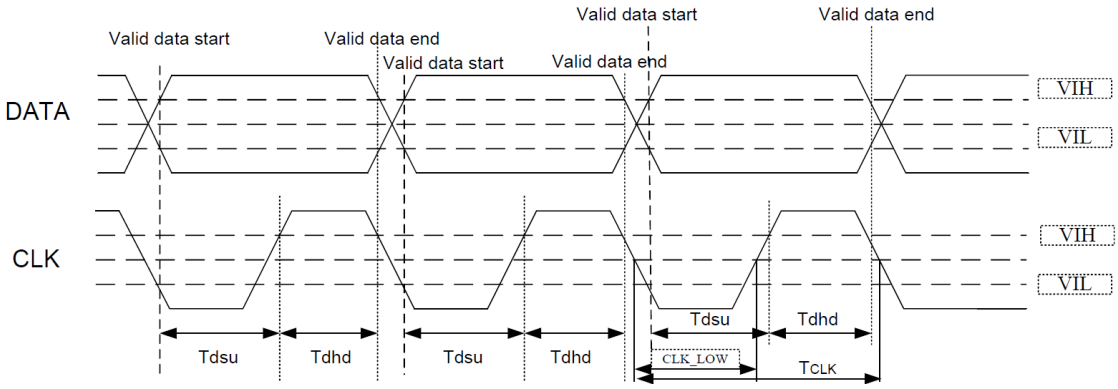

10.2 Parallel RGB timing table

Timing parameter (VDD=3.3V, GND=0V, Ta=25˚C)

PARAMETER	SYMBOL	MIN	TYP	MAX	UNIT	CONDITION
CLK Clock Time	T_{clk}	1/Max(F_{CLK})	-	1/Min(F_{CLK})	ns	-
CLK Pulse Duty	T_{chw}	40	50	60	%	T_{CLK}
HSYNC to CLK	T_{hc}	-	-	1	CLK	-
HSYNC Width	T_{hwh}	1	-	-	CLK	-
VSYNC Width	T_{vwh}	1	-	-	ns	-
HSYNC Period Time	T_h	60	63.56	67	ns	-
VSYNC Set-up Time	T_{vst}	12	-	-	ns	-
VSYNC Hold Time	T_{vhd}	12	-	-	ns	-
HSYNC Setup Time	T_{hst}	12	-	-	ns	-
HSYNC Hold Time	T_{hhd}	12	-	-	ns	-
Data Set-up Time	T_{dsu}	12	-	-	ns	D00~D23 to CLK
Data Hold Time	T_{dhd}	12	-	-	ns	D00~D23 to CLK
DEN Set-up Time	T_{esu}	12	-	-	ns	DEN to CLK

11 TOUCH SCREEN PANEL SPECIFICATIONS

11.1 Electrical characteristics

Note: Avoid operating with hard or sharp material such as a ball point pen or a mechanical pencil except a polyacetal pen (tip R0.8mm or less) or a finger

11.1.1 For capacitive touch panel

DESCRIPTION		SPECIFICATION
Operating Voltage		DC 2.8~3.6V
Power Consumption (IDD)	Active Mode	10~18mA
	Sleep Mode	30~50µA
Interface		I^2C
Linearity		<1.5%
Controller		FT5346
I2C address		0x38 (7 bit address)
Resolution		896*640

11.1.2 For resistive touch panel

ITEM	VALUE			UNIT	REMARK
	Min.	Typ.	Max.		
Linearity	-	-	1.5	%	Analog X and Y directions
Terminal Resistance	200	-	900	Ω	X
	100	-	600	Ω	Y
Insulation Resistance	20	-	-	MΩ	DC 25V
Voltage	-	-	10	V	DC
Chattering	-	-	10	ms	100kΩ pull-up
Transparency	78	-	-	%	JIS K7105

11.2 Mechanical characteristics

Note 1: Force test condition, Input DC 5V on X direction, Drop off Polyacetal Stylus (R0.8), until output voltage stabilize, then get the R8.0mm Silicon rubber and do finger Activation force test. Next step, 9 points.

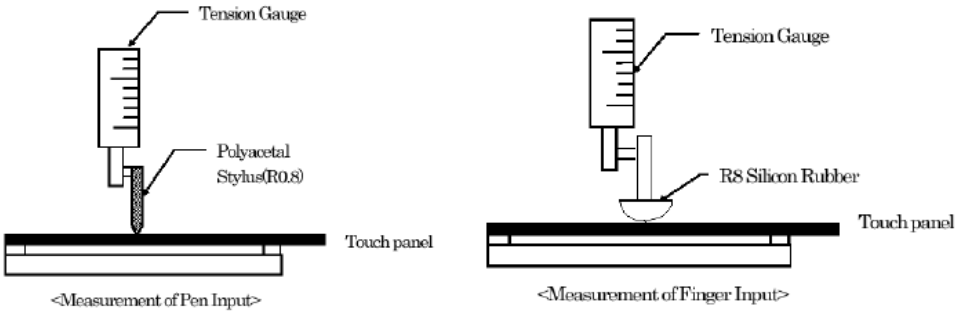

Note 2: Measurement surface area conditions, Scratch 100,000 times straight line on the film with a stylus change every 20,000 times with Force: 250gf, Speed: 60mm/sec by R0.8 polaceteal stylus.
Note 3: Pitting test, Pit 1, 000, 000 times on the film with R0.8 silicon rubber with Force: 250gf and Speed: 2 times/sec.

11.2.1 For capacitive touch panel

DESCRIPTION	INL SPECIFICATION	REMARK
Touch Panel Size	3.5 inch	
Outline Dimension (OD)	76.75 mm x 63.00mm	Cover Lens Outline
Product Thickness	1.40mm	
Glass Thickness	0.7 mm	
Ink View Area	72.00mm x 54.50mm	
Sensor Active Area	73.25mm x 55.90mm	
Input Method	5 Finger	
Activation Force	Touch	
Surface Hardness	≥7H	

11.2.2 For resistive touch panel

Note 1: Force test condition, Input DC 5V on X direction, drop off Polyacetal Stylus (R0.8), until output voltage stabilize, then get the R8.0mm Silicon rubber and do finger Activation force test. Next step, 9 points.

ITEM	VALUE			UNIT	REMARK
	Min.	Typ.	Max.		
Activation Force	20	-	100	gf	Note 1
Durability-Surface Scratching	Write 100,000	-	-	characters	Note 2
Durability-Surface Pitting	1,000,000	-	-	touches	Note 3
Surface Hardness	3	-	-	H	JIS K5400

12 INSPECTION

Standard acceptance/rejection criteria for TFT module.

12.1 Inspection condition

Ambient conditions:

- Temperature: 25±°C
- Humidity: (60±10) %RH
- Illumination: Single fluorescent lamp non-directive (300 to 700 lux)

Viewing distance:

35±5cm between inspector bare eye and LCD.

Viewing Angle:

U/D: 45°/45°, L/R 45°/45°

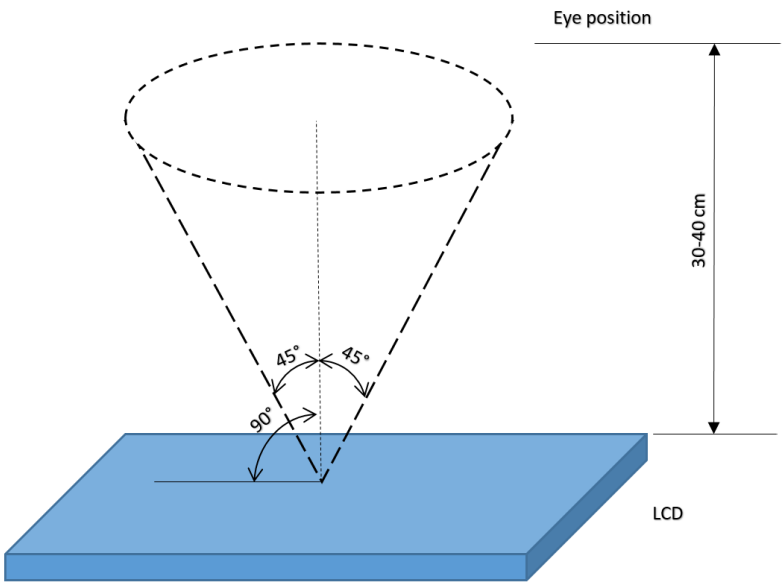

12.2 Inspection standard

<table>
<tr><th>Item</th><th>Criterion</th></tr>
<tr><td>Black spots, white spots, light leakage, Foreign Particle (round Type)</td><td>
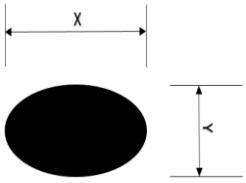

$$D = \frac{(x+y)}{2}$$

*Spots density: 10 mm

<table>
<tr><th colspan="2">Size < 5”</th></tr>
<tr><td>Average Diameter</td><td>Qualified Qty</td></tr>
<tr><td>D < 0.2 mm</td><td>Ignored</td></tr>
<tr><td>0.2 mm < D < 0.3 mm</td><td>3</td></tr>
<tr><td>0.3 mm < D < 0.5 mm</td><td>2</td></tr>
<tr><td>0.5 mm < D</td><td>0</td></tr>
</table>

<table>
<tr><th colspan="2">Size >= 5”</th></tr>
<tr><td>Average Diameter</td><td>Qualified Qty</td></tr>
<tr><td>D<0.2 mm</td><td>Ignored</td></tr>
<tr><td>0.2 mm < D < 0.3 mm</td><td>4</td></tr>
<tr><td>0.3 mm < D < 0.5 mm</td><td>2</td></tr>
<tr><td>0.5 mm < D</td><td>0</td></tr>
</table>
</td></tr>
<tr><td>LCD black spots, white spots, light leakage (line Type)</td><td>
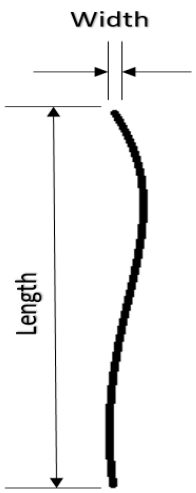

*Spots density: 10 mm

<table>
<tr><th colspan="3">Size < 5”</th></tr>
<tr><td>Length</td><td>Width</td><td>Qualified Qty</td></tr>
<tr><td>-</td><td>W< 0.02</td><td>Ignored</td></tr>
<tr><td>L < 3.0</td><td>0.02 < W <0.05</td><td rowspan="2">2</td></tr>
<tr><td>L < 2.5</td><td>0.05 < W <0.08</td></tr>
<tr><td>-</td><td>0.08 < W</td><td>0</td></tr>
</table>

<table>
<tr><th colspan="3">Size >= 5”</th></tr>
<tr><td>Length</td><td>Width</td><td>Qualified Qty</td></tr>
<tr><td>-</td><td>W< 0.02</td><td>Ignored</td></tr>
<tr><td>L < 3.0</td><td>0.02 < W <0.05</td><td rowspan="2">4</td></tr>
<tr><td>L < 2.5</td><td>0.05 < W <0.08</td></tr>
<tr><td>-</td><td>0.08 < W</td><td>0</td></tr>
</table>
</td></tr>
</table>

<table>
<tr><th>Item</th><th>Criterion</th></tr>
<tr><td>Clear spots</td><td>
<table>
<tr><th colspan="2">Size < 5”</th></tr>
<tr><td>Average Diameter</td><td>Qualified Qty</td></tr>
<tr><td>D < 0.2 mm</td><td>Ignored</td></tr>
<tr><td>0.2 mm < D < 0.3 mm</td><td>3</td></tr>
<tr><td>0.3 mm < D < 0.5 mm</td><td>2</td></tr>
<tr><td>0.5 mm < D</td><td>0</td></tr>
</table>
<table>
<tr><th colspan="2">Size >= 5”</th></tr>
<tr><td>Average Diameter</td><td>Qualified Qty</td></tr>
<tr><td>D<0.2 mm</td><td>Ignored</td></tr>
<tr><td>0.2 mm < D < 0.3 mm</td><td>4</td></tr>
<tr><td>0.3 mm < D < 0.5 mm</td><td>2</td></tr>
<tr><td>0.5 mm < D</td><td>0</td></tr>
</table>
*Spots density: 10 mm
</td></tr>
<tr><td>Polarizer bubbles</td><td>
<table>
<tr><th colspan="2">Size < 5”</th></tr>
<tr><td>Average Diameter</td><td>Qualified Qty</td></tr>
<tr><td>D < 0.2 mm</td><td>Ignored</td></tr>
<tr><td>0.2 mm < D < 0.5 mm</td><td>3</td></tr>
<tr><td>0.5 mm < D < 1 mm</td><td>2</td></tr>
<tr><td>1 mm < D</td><td>0</td></tr>
<tr><td>Total Q’ty</td><td>3</td></tr>
</table>
<table>
<tr><th colspan="2">Size >= 5”</th></tr>
<tr><td>Average Diameter</td><td>Qualified Qty</td></tr>
<tr><td>D<0.25 mm</td><td>Ignored</td></tr>
<tr><td>0.25 mm < D < 0.5 mm</td><td>3</td></tr>
<tr><td>0.5 mm < D</td><td>0</td></tr>
</table>
</td></tr>
<tr><td>Electrical Dot Defect</td><td>
<table>
<tr><th colspan="2">Size < 5”</th></tr>
<tr><td>item</td><td>Qualified Qty</td></tr>
<tr><td>Black do defect</td><td>4</td></tr>
<tr><td>Bright dot defect</td><td>2</td></tr>
<tr><td>Total Dot</td><td>5</td></tr>
</table>
<table>
<tr><th colspan="2">Size >= 5”</th></tr>
<tr><td>item</td><td>Qualified Qty</td></tr>
<tr><td>Black do defect</td><td>5</td></tr>
<tr><td>Bright dot defect</td><td>2</td></tr>
<tr><td>Total Dot</td><td>5</td></tr>
</table>
</td></tr>
</table>

<table>
<tr><th>Item</th><th>Criterion</th></tr>
<tr><td>Touch panel spot</td><td>
<table>
<tr><th colspan="2">Size < 5”</th></tr>
<tr><td>Average Diameter</td><td>Qualified Qty</td></tr>
<tr><td>D < 0.2 mm</td><td>Ignored</td></tr>
<tr><td>0.2 mm < D < 0.4 mm</td><td>5</td></tr>
<tr><td>0.4 mm < D < 0.5 mm</td><td>2</td></tr>
<tr><td>0.5 mm < D</td><td>0</td></tr>
</table>
<table>
<tr><th colspan="2">Size >= 5”</th></tr>
<tr><td>Average Diameter</td><td>Qualified Qty</td></tr>
<tr><td>D<0.25 mm</td><td>Ignored</td></tr>
<tr><td>0.25 mm < D < 0.5 mm</td><td>4</td></tr>
<tr><td>0.5 mm < D</td><td>0</td></tr>
</table>
</td></tr>
<tr><td>Touch panel White Line Scratch</td><td>
<table>
<tr><th colspan="3">Size < 5”</th></tr>
<tr><td>Length</td><td>Width</td><td>Qualified Qty</td></tr>
<tr><td>-</td><td>W< 0.02</td><td>Ignored</td></tr>
<tr><td>L < 3.0</td><td>0.02 < W <0.05</td><td rowspan="2">2</td></tr>
<tr><td>L < 2.5</td><td>0.05 < W <0.08</td></tr>
<tr><td>-</td><td>0.08 < W</td><td>0</td></tr>
</table>
<table>
<tr><th colspan="3">Size >= 5”</th></tr>
<tr><td>Length</td><td>Width</td><td>Qualified Qty</td></tr>
<tr><td>-</td><td>W< 0.03</td><td>Ignored</td></tr>
<tr><td>L < 5.0</td><td>0.03 < W <0.05</td><td>2</td></tr>
<tr><td>-</td><td>0.05 < W</td><td>0</td></tr>
</table>
</td></tr>
</table>

13 RELIABILITY TEST

NO.	TEST ITEM	TEST CONDITION	REMARKS
1	High Temperature Storage	80±2°C/240hours	Note 2
2	Low Temperature Storage	-30±2°C/240hours	Note 1,2
3	High Temperature Operating	70±2°C/240hours	
4	Low Temperature Operating	-20±2°C/240hours	Note 1
5	Temperature Cycle	-30±2°C~25±2°C ~80±2°C × 20 cycles (30min.) (5min.) (30min.)	Note 1,2
6	Damp Proof Test	60°C ±5°C × 90%RH/240hours	
7	Vibration Test	Frequency 10Hz~55Hz Amplitude of vibration : 1.5mm Sweep time: 12 min X, Y, Z 2 hours for each direction.	
8	Package Drop Test	Height:60 cm 1 corner, 3 edges, 6 surfaces	
9	ESD Test	Air: ±4KV 150pF/330Ω 5 times Contact: ±2KV 150pF/330Ω 5 times	
10	ESD Test for RTP	Air: ±8KV 150pF/330Ω 5 times Contact: ±4KV 150pF/330Ω 5 times	

Note 1: Without water condensation.

Note 2: The function test shall be conducted after 2 hours storage at the room temperature and humidity after removed from the test chamber.

14 LEGAL INFORMATION

Riverdi makes no warranty, either expressed or implied with respect to any product, and specifically disclaims all other warranties, including, without limitation, warranties for merchantability, non-infringement and fitness for any particular purpose. Information about device are the property of Riverdi and may be the subject of patents pending or granted. It is not allowed to copy or disclosed this document without prior written permission.

Riverdi endeavors to ensure that the all contained information in this document are correct but does not accept liability for any error or omission. Riverdi products are in developing process and published information may be not up to date. Riverdi reserves the right to update and makes changes to Specifications or written material without prior notice at any time. It is important to check the current position with Riverdi.

Images and graphics used in this document are only for illustrative the purpose. All images and graphics are possible to be displayed on the range products of Riverdi, however the quality may vary. Riverdi is no liable to the buyer or to any third part for any indirect, incidental, special, consequential, punitive or exemplary damages (including without limitation lost profits, lost savings, or loss of business opportunity) relating to any product, service provided or to be provided by Riverdi, or the use or inability to use the same, even if Riverdi has been advised of the possibility of such damages.

Riverdi products are not fault tolerant nor designed, manufactured or intended for use or resale as on line control equipment in hazardous environments requiring fail – safe performance, such as in the operation of nuclear facilities, aircraft navigation or communication systems, air traffic control, direct life support machines or weapons systems in which the failure of the product could lead directly to death, personal injury or severe physical or environmental damage (‘High Risk Activities’). Riverdi and its suppliers specifically disclaim any expressed or implied warranty of fitness for High Risk Activities. Using Riverdi products and devices in 'High Risk Activities' and in any other application is entirely at the buyer’s risk, and the buyer agrees to defend, indemnify and hold harmless Riverdi from any and all damages, claims or expenses resulting from such use. No licenses are conveyed, implicitly or otherwise, under any Riverdi intellectual property rights.

Riverdi
Intelligent Display Solutions