SAMXON®
Aluminum Electrolytic Capacitors

SAMXON

Aluminum Electrolytic Capacitors

RoHS Compliant

Halogen Free

PRODUCT CATALOGUE

QC 080000

IEC QUALITY ASSESSMENT SYSTEM (IECQ)
covering Electronic Components,
Assemblies, Related Materials and Processes

IECQ Certificate of Conformity
Hazardous Substance Process Management

IECQ Certificate No.:	IECQ-H BSI 09.0011	Issue No.:	6	Status:	Current
Supersedes:	IECQ-H BSI 09.0011 Issue 5	Issue Date:	2018/08/06	Org Issue:	2009/07/28
CB Reference No.:	H061657 IECQ	Expiration:	2021/07/25		

Applicable to:

- European Directive 2011/65/EU ("RoHS – Restriction of the use Of certain Hazardous Substances") in electrical and electronic equipment, including all published amendments
- European Directive 2012/19/EU ("WEEE – waste electrical and electronic equipment") recast
- European Regulation EC No. 1907/2006 ("REACH") and its amendments
- China – RoHS 2 2016-01-21 (Management Methods for the Restriction of the Use of Hazardous Substances in Electrical and Electronic Products)

Samxon Electronics (Dongguan) Co., Ltd.
Xinxing Industrial Area, Xingfa South Road,
Wusha Community, Chang'an Town, Dongguan
Guangdong, 523860
China

The organization has developed and implemented Hazardous Substance Process Management procedures and related processes which have been assessed and found to comply with the applicable requirements for IECQ HSPM organization approval which is in accordance with the Basic Rules IECQ 01 and Rules of Procedure IECQ 03-5 "IECQ Hazardous Substances Process Management" of the IEC Quality Assessment System for Electronic Components (IECQ), and with respect to the IECQ Specification:

- IECQ QC 080000:2017 – Hazardous Substance Process Management Systems Requirements

This Certificate is applicable to all electronic components, assemblies, related materials and processes for the following scope of activities:
Design and Manufacture of Aluminium Electrolytic Capacitors

Issued by the Certification Body: BSI

Kitemark Court, Davy Avenue
Knowlhill, Milton Keynes MK5 8PP
United Kingdom

Authorized person:
Paul Turner

bsi.

ISO 9001

bsi.

By Royal Charter

Certificate of Registration

质量管理体系 – ISO 9001:2015

兹证明：
力格三信电子（东莞）有限公司
91441900712210962 4
中国
广东省
东莞市
长安镇
乌沙兴发南路
新星工业园
邮编：523860

Samxon Electronics (Dongguan) Co., Ltd.
Xinxing Industrial Area
Xingfa South Road, Wusha Community
Chang'an Town
Dongguan
Guangdong
523860
China

持有证书：FM 76838

并运行符合 ISO 9001:2015 要求的质量管理体系，认证范围如下：

铝电解电容器的设计与制造。

The design and manufacture of aluminium electrolytic capacitors including.

由以代表：
Chris Cheung，亚太地区 合规风险主管

首次发证日期：2003-07-23
最新发证日期：2018-08-02
生效日期：2018-08-08
有效期至：2021-08-07

Page: 1 of 1

IAF ANAB

...making excellence a habit.™

ISO14001

bsi.

By Royal Charter

Certificate of Registration

环境管理体系 – ISO 14001:2015

兹证明：
力格三信电子（东莞）有限公司
91441900712210962 4
中国
广东省
东莞市
长安镇
乌沙兴发南路
新星工业园
邮编：523860

Samxon Electronics (Dongguan) Co., Ltd.
Xinxing Industrial Area
Xingfa South Road, Wusha Community
Chang'an Town
Dongguan
Guangdong
523860
China

持有证书：EMS 88881

并运行符合 ISO 14001:2015 要求的环境管理体系，认证范围如下：

铝电解电容器的设计与制造。

The design and manufacture of aluminium electrolytic capacitors including.

由以代表：
Chris Cheung，亚太地区 合规风险主管

首次发证日期：2006-01-19
最新发证日期：2018-08-02
生效日期：2018-08-08
有效期至：2021-08-07

Page: 1 of 1

IAF ANAB

...making excellence a habit.™

ACCREDITED

Contents (目錄)

002 Series Chart 產品體系圖
004 Series Table 產品一覽表
006 Application Guidelines 應用指引
015 Part Number System 產品編碼
016 Taping Specifications 編帶產品規格
017 Packing Specifications 包裝規格
018 Lead Forming Specifications 成型產品規格

Miniature Aluminum Electrolytic Capacitors 小型鋁電解電容器

019 Miniature Type 小型品
023 General Purpose 普通品
035 Low Impedance Type 低阻抗品
064 High Reliability Type 高可靠品
076 High Temperature Type 高溫度品
085 For Audio Type 音響用品
087 Non-polarized Type 無極性品
091 Pen Cap Type 筆型電容

Large Can Aluminum Electrolytic Capacitors 大型鋁電解電容器

097 Lug / Snap-in Terminal Type Case Size Table 插入/自立型產品圖解
099 Lug / Snap-in Terminal Standard Type 插入/自立型標准品
119 Lug / Snap-in Terminal High Reliability Type 插入/自立型高可靠品
155 Screw Terminal Type Case Size Table 螺釘型產品圖解
156 Screw Terminal Type 螺釘型

V-Chip Aluminum Electrolytic Capacitors 貼片式鋁電解電容器

187 Surface Mount Type Packing Specifications 貼片品包裝規格
188 Surface Mount Type 貼片品

Series Chart (產品體系圖)

Radial Lead Type 導針型

Low Impedance

SK P.49
-40 ~ +105°C
6,000 ~ 10,000 Hrs
Highest Ripple Current
Lower Impedance
Longest Life

SH P.47
-40 ~ +105°C
5,000 ~ 6,000 Hrs
Highest Ripple Current
Lowest Impedance
Long Life

GK P.45
-40 ~ +105°C
2,000 ~ 5,000 Hrs
Higher Ripple Current
Lower Impedance

GF P.35
-40 ~ +105°C
1,000 ~ 4,000 Hrs
High Ripple Current
Low Impedance

SF P.39
-40 ~ +105°C
3,000 ~ 6,000 Hrs
High Ripple Current
Long Life
Low Impedance

GT P.41
-40 ~ +105°C
4,000 ~ 10,000 Hrs
High Ripple Current
Longer Life
Low Impedance

RF P.60
-55 ~ +105°C
1,000 ~ 4,000 Hrs
Wide Temperature
High Ripple Current
Low Impedance

RS P.53
-40 ~ +105°C
3,000 ~ 7,000 Hrs
High Ripple Current
Longer Life
Low Impedance

GY P.57
-40 ~ +105°C
4,000 ~ 10,000 Hrs
Longer Life
Low Impedance

Miniaturization

KF P.19
-40 ~ +105°C
1,000 Hrs
5mmL

KS P.21
-40 ~ +105°C
1,000 Hrs
7mmL

General

GS P.23
-40(-25) ~ +85°C
2,000 Hrs
General

KM P.26
-40(-25) ~ +105°C
2,000 Hrs
General

KG P.31
-55 ~ +105°C
1,000 ~ 2,000 Hrs
Wide Temperature

High Reliability

RR P.64
-40(-25) ~ +105°C
3,000 Hrs
Long Life
High Ripple Current

RT P.66
-40(-25) ~ +105°C
5,000 Hrs
Long Life
High Ripple Current

RE P.70
-25 ~ +105°C
8,000 ~ 10,000 Hrs
Longer Life

RD P.72
-40(-25) ~ +105°C
8,000 ~ 10,000 Hrs
Longer Life
High Ripple Current

RH P.74
-40(-25) ~ +105°C
10,000 ~ 12,000 Hrs
Longest Life
High Ripple Current

Non-polar

NP P.87
-40 ~ +85°C
1,000 Hrs
Non-polar

NH P.89
-40 ~ +105°C
1,000 Hrs
Non-polar

Pen Cap

KM P.91
-25 ~ +105°C
2,000 Hrs
Pen Cap

RW P.93
-25 ~ +105°C
5,000 Hrs
Long Life
Pen Cap

RY P.95
-25 ~ +105°C
10,000 Hrs
Longer Life
Pen Cap

Special Type

FA P.85
-40 ~ +85°C
1,000 Hrs
For Audio Standard

OM P.33
-25 ~ +105°C
2,000 Hrs
Withstanding Overvoltage

High Temperature

BD P.76
-40 ~ +125°C
1,000 ~ 2,000 Hrs
High Temperature

RA P.78
-40(-25) ~ +130°C
1,000 ~ 4,000 Hrs
High Temperature
High Ripple Current

RB P.81
-40(-25) ~ +130°C
3,000 ~ 4,000 Hrs
High Temperature
High Ripple Current
Long Life

RC P.83
-25 ~ +130°C
5,000 ~ 6,000 Hrs
High Temperature
High Ripple Current
Longer Life

Series Chart (產品體系圖)

Lug / Snap-in Terminal Type 插入/自立型

General

LP P.99
-40(-25) ~ +85℃
2,000 Hrs
Standard

HP P.119
-40(-25) ~ +105℃
2,000 Hrs
Wide Temperature

GP P.152
-40(-25) ~ +105℃
2,000 Hrs
Ultra Small Size

Long Life

TP P.117
-25 ~ +85℃
10,000 Hrs
Ultra Long Life

KP P.128
-40(-25) ~ +105℃
3,000 Hrs
Long Life

EP P.135
-40(-25) ~ +105℃
5,000 Hrs
Long Life

SP P.143
-40(-25) ~ +105℃
7,000 Hrs
Longer Life

Special Type

QP P.108
-40(-25) ~ +85℃
2,000 Hrs
Withstanding Vibration

VP P.146
-40(-25) ~ +105℃
2,000 Hrs
Withstanding Vibration

AP P.106
-40 ~ +85℃
1,000 Hrs
For Audio

UP P.126
-25 ~ +105℃
2,000 Hrs
Withstanding Overvoltage

Low Impedance

DP P.114
-40(-25) ~ +85℃
5,000 Hrs
Long Life
Low Impedance

FP P.141
-40(-25) ~ +105℃
5,000 Hrs
Long Life
Low Impedance

Screw Terminal Type 螺釘型

General

WR P.156
-40(-25) ~ +85℃
2,000 Hrs
Standard

WI P.161
-25 ~ +85℃
2,000 Hrs
High Ripple Current

WT P.164
-40(-25) ~ +105℃
2,000 Hrs
Standard

Long Life

WX P.169
-40(-25) ~ +85℃
5,000 Hrs
Longer Life

WF P.173
-40(-25) ~ +105℃
5,000 Hrs
Long Life

WH P.178
-25 ~ +85℃
10,000 Hrs
Longer Life

WL P.181
-25 ~ +85℃
20,000 Hrs
Ultra Long Life

High Temperature

WB P.184
-25 ~ +125℃
3,000 Hrs
High Temperature

Surface Mount Type 貼片型

General

VS1 P.188
-40 ~ +85℃
2,000 Hrs
General
Φ4 ~ Φ10

VT1 P.190
-55 ~ +105℃
1,000 Hrs
General
Φ4 ~ Φ6.3

VTD P.192
-55 ~ +105℃
2,000 Hrs
Low Impedance
Φ6.3 ~ Φ10

Low Impedance

VZ2 P.196
-55 ~ +105℃
2,000 Hrs
Low Impedance
Φ4 ~ Φ10

High Voltage

VTG P.194
-25 ~ +105℃
3,000 Hrs
High Voltage
Φ8 ~ Φ10

Long Life

VTL P.188
-40 ~ +105℃
3,000 ~ 5,000 Hrs
Long Life
Φ4 ~ Φ10

Series Table (產品一覽表)

Series	Features (特點)	Letter Color	Sleeve Color	Temp. (˚C)	Voltage (VDC)	Cap. (μF)	Load Life	Page
Miniature Aluminum Electrolytic Capacitors								小型鋁電解電容器
Miniature Type								小型品
KF	5mmL (高), +105˚C	White (白)	Black (黑)	-40 ~ +105	4 ~ 50	3.3 ~ 330	1,000 Hrs.	P.19
KS	7mmL (高), -40˚C ~ +105˚C	White (白)	Black (黑)	-40 ~ +105	6.3 ~ 50	3.3 ~ 330	1,000 Hrs.	P.21
General Purpose								普通品
GS	+85˚C, General (普通品)	White (白)	Dark Blue (深藍)	-40(-25) ~ +85	6.3 ~ 450	2.2 ~ 22000	2,000 Hrs.	P.23
KM	+105˚C, General (普通品)	White (白)	Black (黑)	-40(-25) ~ +105	6.3 ~ 550	0.47 ~ 33000	2,000 Hrs.	P.26
KG	-55 ~ +105˚C, Wide Temperature (寬溫度)	White (白)	Black (黑)	-55 ~ +105	6.3 ~ 100	2.2 ~ 22000	1,000 ~ 2,000 Hrs.	P.31
OM	+105˚C, Withstanding Overvoltage (耐過電壓品)	White (白)	Black (黑)	-25 ~ +105	200 & 400	22 ~ 330	2,000 Hrs.	P.33
Low Impedance Type								低阻抗品
GF	+105˚C, High Ripple Current, Low Impedance (高紋波, 低阻抗)	White (白)	Sea Green (海綠)	-40 ~ +105	6.3 ~ 100	3.3 ~ 4700	1,000 ~ 4,000 Hrs.	P.35
SF	+105˚C, High Ripple Current, Long Life Assurance, Low Impedance (高紋波, 長壽命, 低阻抗)	White (白)	Black (黑)	-40 ~ +105	6.3 ~ 100	15 ~ 3900	3,000 ~ 6,000 Hrs.	P.39
GT	+105˚C, High Ripple Current, Longer Life Assurance, Low Impedance (高紋波, 較長壽命, 低阻抗)	Silver (銀)	Black (黑)	-40 ~ +105	6.3 ~ 100	15 ~ 4700	4,000 ~ 10,000 Hrs.	P.41
GK	+105˚C, Higher Ripple Current, Lower Impedance (較高紋波, 較低阻抗)	White (白)	Sea Green (海綠)	-40 ~ +105	6.3 ~ 25	100 ~ 3900	2,000 ~ 5,000 Hrs.	P.45
SH	+105˚C, Highest Ripple Current, Lowest Impedance, Long Life Assurance (更高紋波, 更低阻抗, 長壽命)	White (白)	Black (黑)	-40 ~ +105	6.3 ~ 50	100 ~ 8200	5,000 ~ 6,000 Hrs.	P.47
SK	+105˚C, Highest Ripple Current, Longest Life Assurance, Lower Impedance (更高紋波, 更長壽命, 較低阻抗)	Silver（銀）	Black（黑）	–40 ~ +105	6.3 ~ 100	33 ~ 8200	6,000 ~ 10,000 Hrs	P.49
RS	+105˚C, High Ripple Current, Longer Life Assurance, Low Impedance (高紋波, 較長壽命, 低阻抗)	White (白)	Black (黑)	-40 ~ +105	6.3 ~ 100	15 ~ 4700	3,000 ~ 7,000 Hrs.	P.53
GY	+105˚C, Longer Life Assurance, Low Impedance (較長壽命, 低阻抗)	White (白)	Black (黑)	-40 ~ +105	6.3 ~ 100	2.2 ~ 15000	4,000 ~ 10,000 Hrs.	P.57
RF	-55 ~ +105˚C, Wide Temperature, High Ripple Current, Low Impedance (寬溫度, 高紋波, 低阻抗)	White (白)	Black (黑)	-55 ~ +105	6.3 ~ 100	22 ~ 4700	1,000 ~ 4,000 Hrs.	P.60
High Reliability Type								高可靠品
RR	Long Life Assurance, High Ripple Current (長壽命, 高紋波)	White (白)	Black (黑)	-40(-25) ~ +105	160 ~ 500	1 ~ 220	3,000 Hrs.	P.64
RT	Long Life Assurance, High Ripple Current (長壽命, 高紋波)	White (白)	Black (黑)	-40(-25) ~ +105	160 ~ 500	1 ~ 220	5,000 Hrs.	P.66
RE	Longer Life Assurance (較長壽命)	White (白)	Black (黑)	-25 ~ +105	160 ~ 450	1 ~ 220	8,000 ~ 10,000 Hrs.	P.70
RD	Longer Life Assurance, High Ripple Current (較長壽命, 高紋波)	White (白)	Black (黑)	-40(-25) ~ +105	160 ~ 500	1 ~ 330	8,000 ~ 10,000 Hrs.	P.72
RH	Longest Life Assurance, High Ripple Current (更長壽命, 高紋波)	White (白)	Black (黑)	-40(-25) ~ +105	160 ~ 500	1 ~ 220	10,000 ~ 12,000 Hrs.	P.74
High Temperature Type								高溫度品
BD	+125˚C, High Temperature (高溫度)	White (白)	Black (黑)	-40 ~ +125	10 ~ 50	3.3 ~ 3900	1,000 ~ 2,000 Hrs.	P.76
RA	+130˚C, High Temperature, High Ripple Current (高溫度, 高紋波)	White (白)	Black (黑)	-40(-25) ~ +130	10 ~ 450	1 ~ 4700	1,000 ~ 4,000 Hrs.	P.78
RB	+130˚C, High Temperature, High Ripple Current, Long Life Assurance (高溫度, 高紋波, 長壽命)	White (白)	Black (黑)	-40(-25) ~ +130	160 ~ 450	1.5 ~ 100	3,000 ~ 4,000 Hrs.	P.81
RC	+130˚C, High Temperature, High Ripple Current, Longer Life Assurance (高溫度, 高紋波, 較長壽命)	White (白)	Black (黑)	-25 ~ +130	160 ~ 450	1.5 ~ 100	5,000 ~ 6,000 Hrs.	P.83
For Audio Type								音響用品
FA	Standard, For Audio (標準品, 音響電容)	White (白)	Coffee (咖啡)	-40 ~ +85	6.3 ~ 100	2.2 ~ 10000	1,000 Hrs.	P.85
Non-polarized Type								無極性品
NP	+85˚C, Non-polar (無極性)	Black (黑)	Green (綠)	-40 ~ +85	6.3 ~ 100	2.2 ~ 6800	1,000 Hrs.	P.87
NH	+105˚C, Non-polar (無極性)	White (白)	Black (黑)	-40 ~ +105	6.3 ~ 100	2.2 ~ 1000	1,000 Hrs.	P.89
Pen Cap Type								筆型電容
KM	+105˚C, Pen Cap (筆型電容)	White (白)	Black (黑)	-25 ~ +105	200 ~ 450	22 ~ 270	2,000 Hrs.	P.91
RW	+105˚C, Pen Cap, Long Life Assurance (筆型電容, 長壽命)	White (白)	Black (黑)	-25 ~ +105	200 ~ 450	22 ~ 220	5,000 Hrs.	P.93
RY	+105˚C, Pen Cap, Longer Life Assurance (筆型電容, 較長壽命)	White (白)	Black (黑)	-25 ~ +105	200 ~ 450	22 ~ 220	10,000 Hrs.	P.95
Large Can Aluminum Electrolytic Capacitors								大型鋁電解電容器
Standard Type								標準品
LP	Lug / Snap-in Terminal Type, Standard (插入/自立型, 標準品)	White (白)	Black (黑)	-40(-25) ~ +85	10 ~ 700	56 ~ 82000	2,000 Hrs.	P.99
AP	Lug / Snap-in Terminal Type, For Audio (插入/自立型, 音響電容)	White (白)	Coffee (咖啡)	-40 ~ +85	16 ~ 100	680 ~ 10000	1,000 Hrs.	P.106
QP	Lug / Snap-in Terminal Type, Withstanding Vibration (插入/自立型, 耐振動)	White (白)	Black (黑)	-40(-25) ~ +85	10 ~ 500	56 ~ 82000	2,000 Hrs.	P.108
DP	Lug / Snap-in Terminal Type, Long Life Assurance, Low Impedance (插入/自立型, 長壽命, 低阻抗)	White (白)	Black (黑)	-40(-25) ~ +85	160 ~ 650	47 ~ 2200	5,000 Hrs.	P.114
TP	Lug / Snap-in Terminal Type, Ultra Long Life Assurance (插入/自立型, 超長壽命)	White (白)	Black (黑)	-25 ~ +85	200 ~ 450	56 ~ 2200	10,000 Hrs.	P.117

Series Table (產品一覽表)

Series	Features (特點)	Letter Color	Sleeve Color	Temp. (˚C)	Voltage (VDC)	Cap. (μF)	Load Life	Page
Large Can Aluminum Electrolytic Capacitors								大型鋁電解電容器
High Reliability Type								高可靠品
HP	Lug / Snap-in Terminal Type, Wide Temperature (插入/自立型, 寬溫度)	White (白)	Black (黑)	-40(-25) ~ +105	10 ~ 600	47 ~ 56000	2,000 Hrs.	P.119
UP	Lug / Snap-in Terminal Type, Withstanding Overvoltage (插入/自立型, 耐過電壓品)	White (白)	Black (黑)	-25 ~ +105	200 ~ 450	56 ~ 1200	2,000 Hrs.	P.126
KP	Lug / Snap-in Terminal Type, Long Life Assurance (插入/自立型, 長壽命)	White (白)	Black (黑) *Blue (藍)	-40(-25) ~ +105	10 ~ 600	47 ~ 56000	3,000 Hrs.	P.128
EP	Lug / Snap-in Terminal Type, Long Life Assurance (插入/自立型, 長壽命)	White (白)	Black (黑) *Blue (藍)	-40(-25) ~ +105	10 ~ 550	82 ~ 47000	5,000 Hrs.	P.135
FP	Lug / Snap-in Terminal Type, Long Life Assurance, Low Impedance (插入/自立型, 長壽命, 低阻抗)	Silver (銀)	Black (黑)	-40(-25) ~ +105	10 ~ 450	100 ~ 33000	5,000 Hrs.	P.141
SP	Lug / Snap-in Terminal Type, Longer Life Assurance (插入/自立型, 較長壽命)	White (白)	Black (黑)	-40(-25) ~ +105	160 ~ 450	39 ~ 2200	7,000 Hrs.	P.143
VP	Lug / Snap-in Terminal Type, Withstanding Vibration (插入/自立型, 耐振動)	White (白)	Black (黑)	-40(-25) ~ +105	10 ~ 500	39 ~ 56000	2,000 Hrs.	P.146
GP	Lug / Snap-in Terminal Type, Ultra Small Size (插入/自立型, 超小體積)	White (白)	Black (黑)	-40(-25) ~ +105	160 ~ 450	100 ~ 3300	2,000 Hrs.	P.152
Screw Terminal Type								螺釘型
WR	+85˚C, Screw Terminal Type, Standard (螺釘型, 標準品)	Silver (銀)	Black (黑)	-40(-25) ~ +85	10 ~ 630	100 ~ 680000	2,000 Hrs.	P.156
WI	+85˚C, Screw Terminal Type, High Ripple Current (螺釘型, 高紋波)	Silver (銀)	Black (黑)	-25 ~ +85	350 ~ 450	390 ~ 22000	2,000 Hrs.	P.161
WT	+105˚C, Screw Terminal Type, Standard (螺釘型, 標準品)	Silver (銀)	Black (黑)	-40(-25) ~ +105	10 ~ 500	180 ~ 680000	2,000 Hrs.	P.164
WX	+85˚C, Screw Terminal Type, Long Life Assurance (螺釘型, 長壽命)	Silver (銀)	Black (黑)	-40(-25) ~ +85	10 ~ 550	1000 ~ 1500000	5,000 Hrs.	P.169
WF	+105˚C, Screw Terminal Type, Long Life Assurance (螺釘型, 長壽命)	Silver (銀)	Black (黑)	-40(-25) ~ +105	10 ~ 500	330 ~ 390000	5,000 Hrs.	P.173
WH	+85˚C, Screw Terminal Type, Longer Life Assurance (螺釘型, 較長壽命)	Silver (銀)	Black (黑)	-25 ~ +85	350 ~ 500	470 ~ 22000	10,000 Hrs.	P.178
WL	+85˚C, Screw Terminal Type, Ultra Long Life Assurance (螺釘型, 超長壽命)	Silver (銀)	Black (黑)	-25 ~ +85	350 ~ 450	2200 ~ 12000	20,000 Hrs.	P.181
WB	+125˚C, Screw Terminal Type, High Temperature (螺釘型, 高溫度)	Silver (銀)	Black (黑)	-25 ~ +125	160 ~ 400	330 ~ 15000	3,000 Hrs.	P.184
V-Chip Aluminum Electrolytic Capacitors								貼片式鋁電解電容器
Surface Mount Type								貼片品
VS1	+85˚C, Surface Mount Type, General Purpose（貼片普通品）			–40 ~ +85	6.3 ~ 50	0.1 ~ 1500	2,000 Hrs.	P.188
VT1	+105˚C, Surface Mount Type, General Purpose, 1,000 Hours（貼片普通品）			–55 ~ +105	6.3 ~ 50	0.1 ~ 220	1,000 Hrs.	P.190
VTD	+105˚C, Surface Mount Type, General Purpose, 2,000 Hours（貼片普通品）			–55 ~ +105	25 ~ 100	4.7 ~ 1500	2,000 Hrs.	P.192
VTG	+105˚C, Surface Mount Type, High Voltage, 3,000 Hours（高壓貼片品）			–25 ~ +105	400	2.2 ~ 4.7	3,000 Hrs.	P.194
VZ2	+105˚C, Surface Mount Type, Low Impedance（低阻抗貼片品）			–55 ~ +105	6.3 ~ 100	1 ~ 1500	2,000 Hrs.	P.196
VTL	+105˚C, Surface Mount Type, Long Life, 3,000/5,000 Hours（長壽命貼片品）			–40 ~ +105	10 ~ 50	0.1 ~ 1000	3,000/5,000Hrs.	P.198

* Automative

Application Guidelines (應用指引)

1. Circuit Design

1.1 Please make sure the environment and mounting conditions to which the capacitor will be exposed are within the conditions specified in this catalog (or alternate SAMXON'S specifications, such as series drawings).

1.2 Operating temperature and applied ripple current must be within SAMXON'S specification.

- The capacitor must not be used in an ambient temperature which exceeds the operating temperature specified in this catalog.
- Do not apply excessive current which exceeds the allowable ripple current.

1.3 Appropriate capacitors which comply with the life requirement of the products should be selected when designing the circuit.

1.4 Aluminum electrolytic capacitors are polarized. Do not apply reverse voltage or AC voltage. Please use non-polar capacitors for a circuit that can possibly see reversed polarity. Note: Even non-polar capacitors cannot be used for AC voltage application.

1.5 Do not use aluminum electrolytic capacitors in a circuit that requires rapid and very frequent charge/discharge. In this type of circuit, it is necessary to use a special design capacitor with extended life characteristics.

1.6 Do not apply excess voltage.

- Please pay attention so that the peak voltage, which is DC voltage overlapped by ripple current, will not exceed the rated voltage.
- In the case where more than 2 aluminum electrolytic capacitors are used in series , please make sure that applied voltage will be lower than rated voltage and the voltage will be applied to each capacitor equally using a balancing resistor in parallel with the capacitor.

1.7 Outer sleeve of the capacitor is not guaranteed as an electrical insulator.

- Do not use a standard sleeve on a capacitor in applications that require the electrical insulation. When the application requires special insulation, please contact our sales office for details.
- Do not connect the blank terminal (reinforcing terminal) of a multi-terminal (three- or four-terminal) product of the snap-in type to another circuit it may cause a short circuit.

1.8 Capacitors must not be used under the following conditions:

- Capacitors must not be exposed to water (including condensation), brine or oil.
- Ambient conditions that include toxic gases such as hydrogen sulfide, sulfurous acid, nitrous acid, chlorine, ammonium, etc.
- Ambient conditions that expose the capacitor to ozone, ultraviolet ray and radiation.
- Severe vibration and physical shock conditions that exceed SAMXON'S specifications.

1.9 When designing a circuit board, please pay attention to following:

- Make the hole spacing on the P.C. board match the lead spacing of the capacitor.
- There should not be any circuit pattern or circuit wire above the capacitor safety vent.
- Unless otherwise specified, following clearance should be mad above the safely vent.

Case Diameter	Gap Required
Φ6.3~16	2mm or more
Φ18~35	3mm or more
Φ40 or more	5mm or more

- In case the vent side is placed toward P.C. board (such as end seal vented parts), make a corresponding hole on the P.C. board to release the gas when vent is operated. The hole should be made to match the capacitor vent position.

- Do not install screw terminal capacitor with end seal side down. When you install a screw terminal capacitor in a horizontal mount, the positive terminal must be in the upper position.

1.10 The main chemical solution of the electrolyte and the separator paper used in the capacitors are combustible. The electrolyte is conductive. When it comes in contact with the P.C. board, there is a possibility of pattern corrosion or short circuit between the circuit pattern which could in result of smoking or catching fire. Do not locate any circuit pattern beneath the capacitor end seal.

1.11 Do not design a circuit board so that heat generating components such as resistor and transistors are placed near an aluminum capacitor or reverse side of P.C. board (under the capacitor).

1.12 Electrical characteristics may vary depending on changes in temperature and frequency. Please consider this variation when you design circuits.

1.13 When you are designing capacitors for use on double-sided P.C. boards, do not place capacitors on circuit patterns or over the unused holes.

1.14 The torque for terminal screw or brackets screws must be within the specified value on SAMXON's drawings.

1.15 When you install more than 2 capacitors in parallel, consider the balance of current flowing into the capacitors.

2. Mounting

2.1 Once a capacitor has been assembled in the set and power applied, do not attempt to reuse the capacitor in other circuits or application.

2.2 Electric potential between positive and negative terminal may exist as a result or returned electromotive force, so please discharge the capacitor using a 1kΩ resistor.

2.3 Leakage current of the parts that have been stored for more than 6 months may increase. When leakage current has increased, please perform a voltage treatment using 1kΩ resistor.

2.4 Please confirm ratings before installing capacitors on the P.C. board.

2.5 Please confirm polarity before installing capacitors on the P.C. board.

2.6 Do not drop capacitors on the floor, nor use a capacitor that was dropped.

2.7 Be careful not to deform the capacitor during installation.

2.8 Please confirm that the lead spacing of the capacitor matches the hole spacing of the P.C. board prior to installation.

2.9 Snap-in can type capacitor such as JIS configuration 692, 693, 694 and 695 type should be installed tightly to the P.C. board (allow no gap between the P.C. board and bottom of the capacitor).

2.10 Please pay attention that the clinch force is not too strong when capacitors are placed and fixed by an automatic insertion machine.

2.11 Please pay attention to that the mechanical shock to the capacitor by suction nozzle of the automatic insertion machine or automatic mounter, or by product checker, or by centering mechanism.

2.12 Soldering condition must be confirmed to be within SAMXON'S specification.

- Pb/Sn Type
  Flow Soldering: 235 ±5˚C ≤10 sec.
  Hand Soldering (Soldering iron tip): 350 ±10˚C ≤3 sec.

- Pb-free Type
  Flow Soldering: 260 ±5˚C ≤10 sec.
  Hand Soldering (Soldering iron tip): 400 ±10˚C ≤3 sec.

2.13 Do not tilt lay down or twist the capacitor body after the capacitor are soldered to the P.C. board.

2.14 Do not carry the P.C. board by grasping the soldered capacitor.

2.15 Please do not allow anything to touch the capacitor after soldering. If P.C. board are stored in stack, please make sure P.C. board or the other components do not touch the capacitor. The capacitors shall not be effected by any radiated heat from the soldered P.C. board or other components after soldering.

2.16 Do not clean capacitors with halogenated cleaning agent.

2.17 Precautions on fixing materials and coating materials.

- Do not use any ingredients which contain halogen.
- Please pay attention to remove flux and any contamination which remains in the gap between the end seal and P.C. board and dry that portion well before coating.
- Please do not apply any material all around the capacitor body but apply it partially.
- Please contact our sales office to make sure whether the curing condition of coating material would cause any problems.

2.18 Do not install screw terminal capacitor with end seal side down. When you install a screw terminal capacitor in a horizontal position, the positive terminal must be in the upper position.

3. Storage

3.1 The characteristics of aluminum electrolytic capacitors degrade when stored in a static condition for long period of time. The rate of deterioration depends upon temperature and humidity.

3.2 Capacitors should be stored at the temperature of 5˚C to 35˚C, the humidity of less than 75% RH and out of direct sunlight.

3.3 Capacitors that have been stored for long periods normally over one year should be subjected to a "voltage aging" treatment before use. This will reform and repair the oxide dielectric.

3.4 Suggested aging procedure is gradually applying the rated voltage to the capacitor(s) for 30 to 60 minutes. If the capacitance still exceeds the specified leakage current value, please do not use it.

4. Disposal

4.1 Dispose of capacitors as industrial waste.

4.2 Consignment to the waste disposal specialists to handle it professionally.

The above mentioned material according to EIAJ RCR-2367B (issued in March, 2002), titled "Guideline of notabilia for aluminum electrolyic capacitors for use in electronic equipment". Please refer to the book for details.

5. Printed Circuit Board Cleaning

5.1 Foreword

It had been generally accepted that halogen type organic solvents were hazardous to aluminum electrolytic capacitors. This is because an organic solvent can permeate the capacitor through the end seal. Then, the solvent dissolves and free chlorine ion (Cl^-ion), which can corrode the aluminum electrodes. The following measures were previously the only way to avoid this phenomenon.

- Use of cleaning agents, not hazardous to capacitors such as water or alcohol.
- Mount capacitors on PC boards cleaned with a halogen type solvent beforehand.
- Use of epoxy end seals

These measures have disadvantages with respect to working efficiency, cleaning capability, cost etc. Therefore, aluminum electrolytic capacitors which can withstand halogen type cleaning agents are desirable.

5.2 Types of Cleaning Agents

Generally there are three types of cleaning agents.

- Water type
- Alcohol type
- Halogen type

Of these, water and alcohol will have little effect even if they permeate the capacitor. However, halogens can cause corrosion of aluminum foil and tab. Common types of halogen cleaning agents are listed in Table below:

Chemical Name	Structural Formula	Representative Brand Name
Trichlorotrifluoroethane	$C_2Cl_3F_3$	Freon TF, Daiflon S-3
Fluorotrichloromethane	CCl_3F	Freon-11, Daiflon S-1
Trichloroethane	$C_2H_3Cl_3$	Chloroethene
Trichloroethylene	C_2HCl_3	Trichlene
Methyl Chloride	CH_3Cl	MC

The last four solvents listed above are particularly corrosive to aluminum and are not recommended to use as cleaning solvents.

5.3 Penetration Channel of Solvent and Corrosion Mechanism

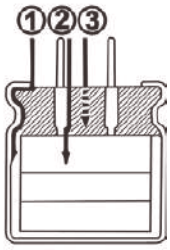

The three channels by which solvents can penetrate into the capacitor are illustrated:

- ① Penetration through a clearance between the rubber and the aluminum case (curled section)
- ② Penetration through a clearance between the rubber and the lead wires
- ③ Permeation through the rubber end seal

To reduce the possibility of solvents entering a capacitor, tight sealing is required to eliminate clearances between the rubber and the aluminum case/lead wires. A solvent resistant rubber material is also a necessity.

When a solvent, for example, trichlo-rotrifluoroethane gets inside a non anti-solvent capacitor, the chlorine ion is free as shown by the following reaction formula.

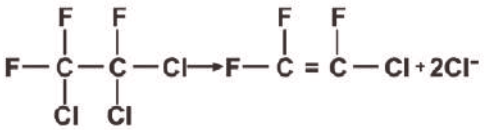

This chlorine ion reacts with aluminum as follows:

$$Al + 3Cl^- \longrightarrow AlCl_3 + 3e^-$$

Then $AlCl_3$ resolves in water, and it becomes:

$$AlCl_3 + 3H_2O \longrightarrow Al(OH)_3 + 3H^+ + 3Cl^-$$

Thus, the Cl^-ion is free again and repeats the corrosion of aluminum. The degree of this reaction depends on the volume of solvent, the ambient temperature of the capacitor in service, the applied voltage and time etc.

Application Guidelines (應用指引)

6. Basic Electrical Characteristics Capacitance:

The capacitance of capacitor is determined as AC capacitance by measuring its impedance. As the AC capacitance depends on frequency, voltage and other measuring methods, JIS C 5102 prescribes that the series capacitive component of an equivalent series circuit shall be considered as the capacitance by measuring it at a frequency of 120Hz and a maximum AC voltage of 0.5Vrms with a DC bias voltage of 1.5 to 2.0V applied for aluminum electrolytic capacitors.

The capacitance of an aluminum electrolytic capacitor shows smaller values as a measuring frequency increases. See the typical behavior shown as right chart.

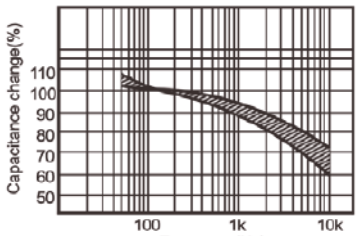

Capacitance vs. Frequency

Measuring temperature as well as frequency effects the capacitance. As the measuring temperature decreases, the capacitance shows smaller values. See the typical behavior shown as right chart.

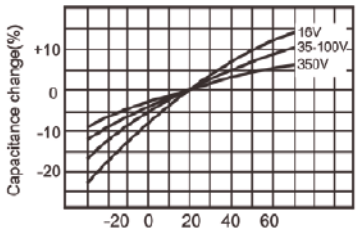

Capacitance vs. Temperature

On one hand, DC capacitance, which can be determined by measuring the charge when a DC voltage is applied, shows a slightly larger value than the AC capacitance at a normal temperature and has the flatter characteristic over the temperature range.

Tan δ (tangent of loss angle or dissipation factor):

The tan δ is the ratio of the resistive component (ESR) to the capacitive reactance (1/ωC) in the equivalent series circuit, and its measuring conditions are the same as the capacitance.

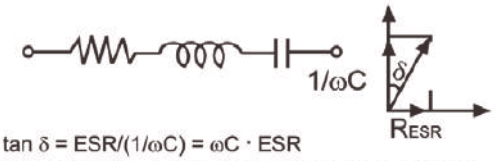

$\tan\delta = ESR/(1/\omega C) = \omega C \cdot ESR$

Where: ESR = Equivalent series resistor at 120Hz

$\omega = 2\pi f$

f = 120Hz

The tan δ show higher values as a measuring frequency increases and a measuring temperature decreases, as follows:

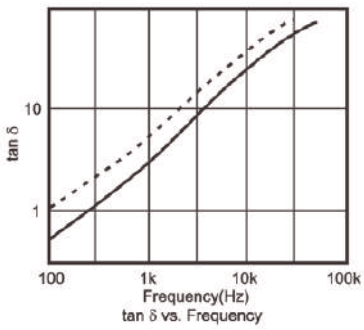

tan δ vs. Frequency

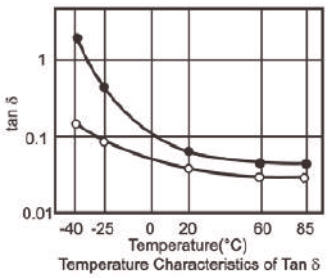

Temperature Characteristics of Tan δ

Equivalent Series Resistance (ESR)

The ESR is comprised of the resistance due to aluminum oxide layer and electrolyte/separator combination and other resistance effected with foil length, foil surface area, etc.

The ESR value depends on the temperature. Decreasing the temperature makes the resistivity of the electrolyte increase with the result of the ESR increasing.

As the measuring frequency increases, the ESR decreases and reaches an almost constant value that is mainly the frequency-independent resistance due to electrolyte/separator combination.

Impedance (Z):

The impedance is the resistance which oppose the flow of alternating current at a specific frequency. It is related to capacitance (C) and inductance (L) in terms of capacitive and inductive reactance, and also related to the ESR. It is expressed as follows:

$$Z = \sqrt{ESR^2 + (X_L - X_C)^2}$$

Where: $X_C = 1/\omega C = 1/2\pi fC$

$X_L = \omega L = 2\pi fL$

As shown as right chart, the capacitive reactance (Xc) predominates at the range of low frequencies, and the impedance decreases with increasing frequency until it reaches the ESR in the middle frequency range. At the range of the higher frequencies the inductive reactance (X_L) comes to predominate, so that the impedance increases with increasing the measuring frequency.

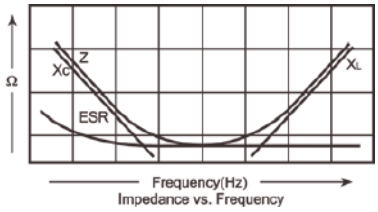

Impedance vs. Frequency

As shown as right chart, the impedance value varies with temperature, because the resistance of the electrolyte strongly changes with temperature.

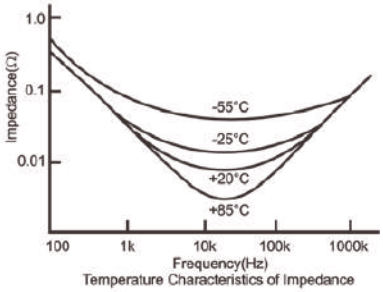

Temperature Characteristics of Impedance

Leakage Current:

The dielectric of a capacitor has a very high resistance which prevents the flow of DC current. However, due to the characteristics of the aluminum oxide layer that functions as a dielectric in contact with electrolyte, a small amount of current, called leakage current, will flow to reform and repair the oxide layer while a voltage is being applied. As shown below, a high leakage current flows in the first minutes as a voltage is applied to the capacitor, and then the leakage current will decrease and reach an almost steady-state value with time.

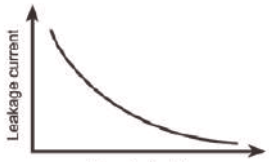

Leakage Current vs Time

Measuring temperature and voltage effect the leakage current. The leakage current shows higher values as the temperature and voltage increase.

In general, the leakage current is measured at 20˚C by applying the rated voltage, which is applied through a resistor of 1,000Ω connected in series with the capacitor, and several minutes after the capacitor reached the rated voltage. The catalog prescribes the measuring temperature and time.

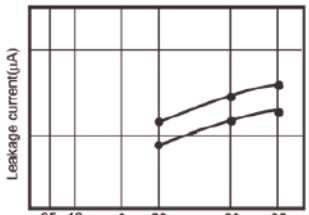

Typical Temperature Characteristics

LIFE ESTIMATION CHART

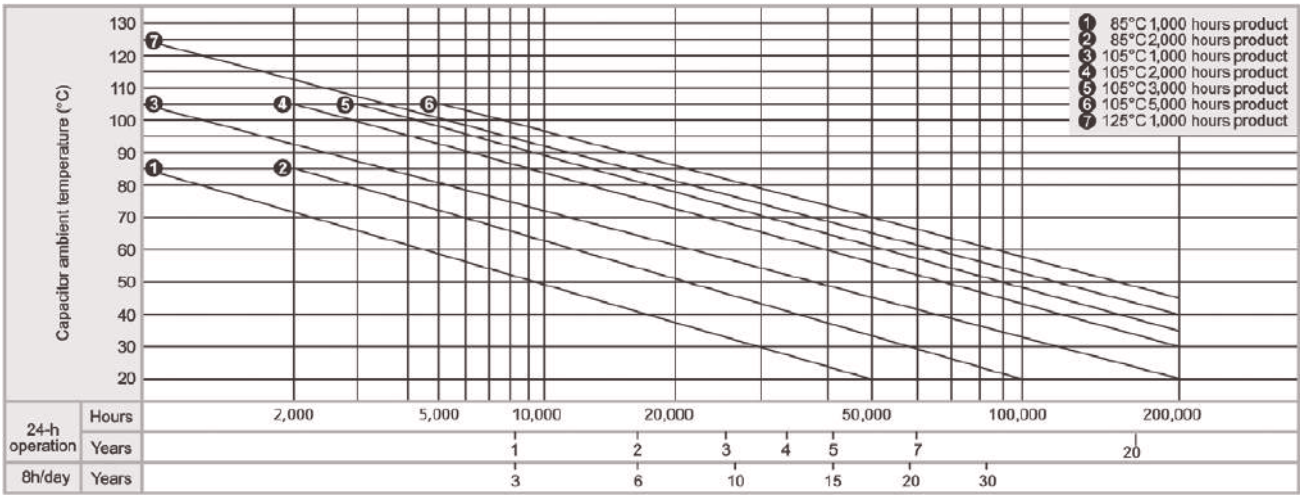

7. Quality Policy

7.1 General

Our basic corporate goals and commitment to total quality are set down in our quality policy. The quality of our products and services is an essential part of our corporate strategy, whose paramount aim is total customer satisfaction. Consistent application of quality management system results in flawless products and a high level of user benefit from our components. Our quality management system always reflects the most stringent international standards.

Our corporate goals is to play a leading role among the world's most competitive companies in electronic components. All quality management measures are geared to optimum customer benefit.

They include:

- Mastery of processes
- Continuous improvement programs to narrow process tolerances, and to increase quality and yield.
- Enhanced productivity
- Continuous optimization of material, capital and human resources.
- Promotion of innovation
- Putting customer benefit first in every product we design. Determining customer needs in partnership with customers, and rapid implementation of agreements.

The SAMXON quality management system, which is documented in the new edition of the company-wide SAMXON Quality Management Handbook, is designed to support this strategy.

7.2 Quality assurance

The required measures and regulations for quality assurance are documented in instructions on operations and procedures; the effectiveness and adequacy of the QA system are regularly checked in internal audits.

7.3 Quality programs

Project-oriented improvement programs pursuing the strategic objective of zero defects are set up and conducted by specialist teams.

7.4 Process assurance

Assurance of production processes starts as early as the planning and development phase. Quality tools like FMEA and SVP help detect and avoid potential errors, and safeguard process capability and product quality. Documentation of all production and testing steps as well as training of personnel are essential to flawless production. Statistical process control (SPC) is used wherever applicable. Permanent availability of plant is ensured by preventive maintenance.

7.5 Incoming inspection

Raw materials, parts and consumable undergo incoming inspection appropriate to their significance in the end product, unless this responsibility has been transferred to the supplier under a quality assurance agreement or similar.

7.6 In-process inspection

Wherever possible, in-process inspection in conducted to certify the conformity not only of intermediate products, but also of process supervision and control (e.g. SPC). It is generally integrated into the process steps and designed to be as preventive as possible, i.e. to avoid errors.

7.7 Final inspection/approval for shipment

Final inspection verifies the major properties of the end products batch by batch, usually by means of fully automated selection tests.

Approval for shipment helps certify that products shipped comply with specifications. It includes:

- Testing of principal parameter,
- Identification check and visual assessment,
- Examination of papers accompanying the batch.

8. Manufacturing and quality assurance procedures for Al electrolytic capacitors

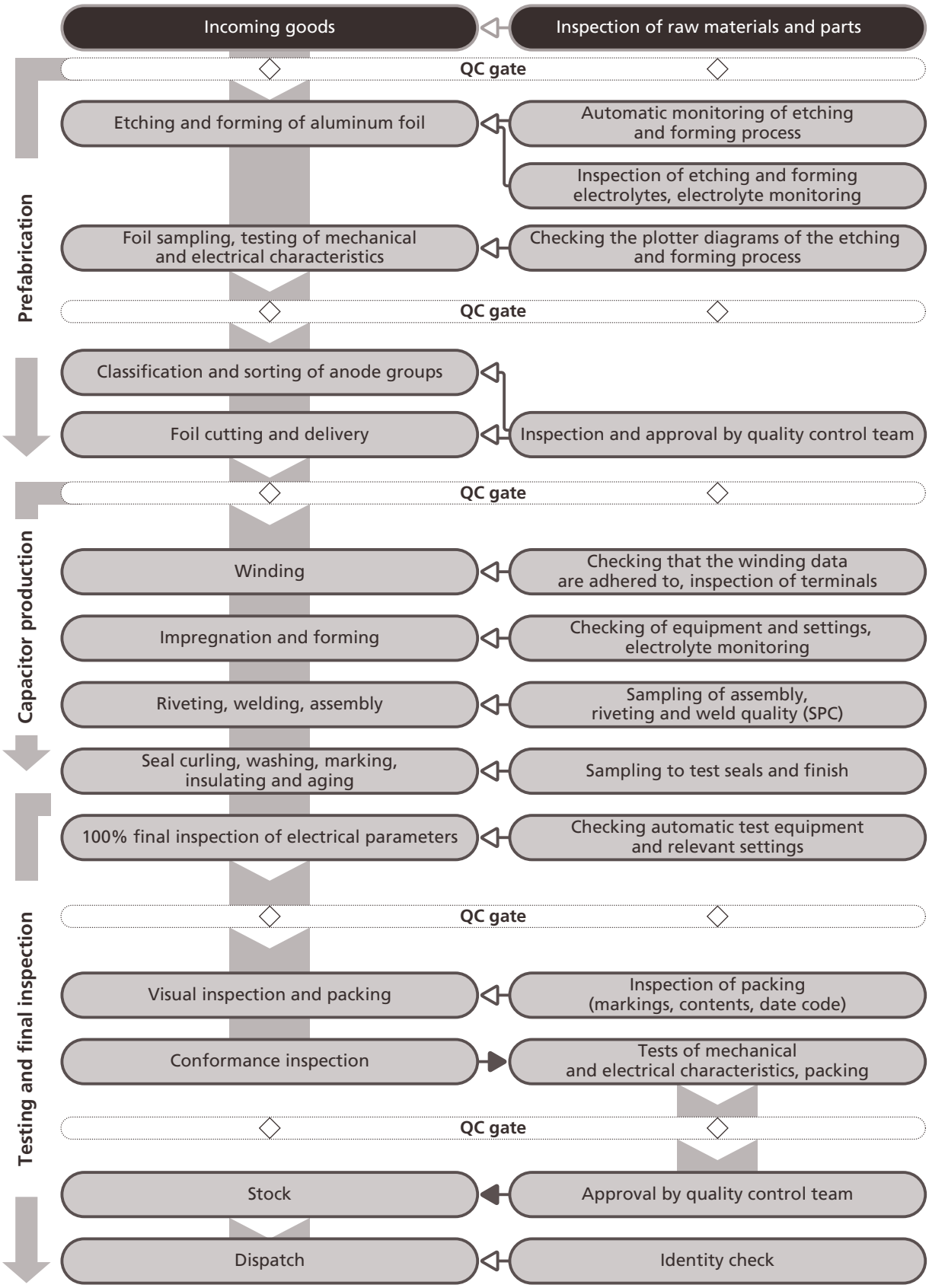

9. Environmental

Environmental policy

Our fundamental commitment to protection of the environment is laid down in SAMXON environmental policy:

- We work continuously to lighten the burden on the environment and to reduce consumption of energy and resources beyond statutory requirements.
- We take all precautions to avoid environmental hazards and to prevent damage to the environment.
- Potential impact on the environment is assessed and flows into product and process planning at the earliest possible stage.
- Our environmental management system ensures that our environmental policy is effectively implemented. The technical and organizational procedures required are regularly monitored and constantly upgraded.
- Every employee is required to act in an environmentally conscious manner. It is a permanent task of management to promote awareness of responsibility for the environment at all levels.
- We seek to influence our business associates to follow environmental guidelines similar to ours. We supply our customers with information on environmentally friendly use of our products. We work in a spirit of cooperation with the authorities.
- We inform the public of the environmental impact of our activities and the environmental achievements of our company.

10. Compliance with RoHS Directive

The company is committed to compliance with the European Union Restriction of Hazardous Substance (RoHS) Directive. We hereby guarantee that our products do not contain following materials exceeding the RoHS Directive (2011/65/EU).

- Lead (Pb) and its compounds ≤1000ppm
- Mercury (Hg) and its compounds ≤1000ppm
- Cadmium (Cd) and its compounds ≤100ppm
- Hexavalent chromium, Cr^{6+}, Cr VI ≤1000ppm
- Polybrominated biphenyls, PBBs ≤1000ppm
- Polybrominated diphenyls, PBDEs ≤1000ppm

11. Halogen Free Compliant

The products identified in the catalogue, and their homogeneous subcomponents, do not contain any of the following substances in concentrations greater than the listed maximum limits.

Substance	Maximum Limit (ppm)
Bromine (Br)	900 ppm (0.09%)
Chlorine (Cl)	900 ppm (0.09%)
Total concentration of Chlorine (Cl) + Bromine (Br)	1500 ppm (0.15%)

Part Number System (產品編碼)

1	2 3	4 5 6	7	8 9	10 11 12	13 14	15 16	17
E	G S	1 0 5	M	1 H	D 1 1	T C	S A	P
CATEGORY	SERIES	CAPACITANCE	TOLERANCE	VOLTAGE	CASE SIZE	TYPE	SAMXON PRODUCT LINE	SLEEVE MATERIAL

Category	Code
ECap	E
* ECap	A
V-Chip	V

Series
KF
KS
GS
KM
KG
OM
GF
SF
GT
GK
SK
SH
SK
RS
GY
RF
RR
RT
RE
RD
RH
BD
RA
RB
RC
FA
NP
NH
RW
RY
LP
AP
QP
DP
TP
HP
UP
KP
PK
P
FP
SP
VP
GP
WR
WI
WT
WX
WF
WH
WL
WB
S1
T1
TD
TG
Z2
TL

Cap (uF)	Code
0.1	104
0.22	224
0.33	334
0.47	474
1	105
2.2	225
3.3	335
4.7	475
10	106
22	226
33	336
47	476
100	107
220	227
330	337
470	477
2200	228
22000	229
33000	339
47000	479
100000	10T
150000	15T
220000	22T
330000	33T
1000000	10M
1500000	15M
2200000	22M
3300000	33M

Tol. (%)	Code
±5	J
±10	K
±15	L
±20	M
±30	N
-40 0	W
-20 0	A
-20 +10	C
-20 +40	X
-20 +50	S
-10 0	B
-10 +20	V
-10 +30	Q
-10 +50	T
+13 +50	E
-5 +15	F
-5 +20	G
0 +20	R
0 +30	O
0 +50	I
+5 +15	Z
+5 +20	D
+10 +50	H

Vol. (W.V.)	Code
2	0D
2.5	0E
4	0G
6.3	0J
8	0K
10	1A
12.5	1B
16	1C
20	1D
25	1E
30	1I
32	13
35	1V
40	1G
42	1M
50	1H
57	1L
63	1J
71	1S
75	1T
80	1K
85	1R
90	19
100	2A
120	2O
125	2B
150	2Z
160	2C
180	2P
200	2D
215	22
220	2N
230	23
250	2E
275	2T
300	2I
310	2R
315	2F
330	2U
350	2V
360	2X
375	2Q
385	2Y
400	2G
420	2M
450	2W
500	2H
550	25
600	26
630	2J

Case Size	
Diameter(Φ)	Code
3	B
3.5	1
4	C
5	D
6.3	E
8	F
10	G
12.5	I
13	J
13.5	V
14	4
14.5	A
16	K
16.5	7
18	L
18.5	8
20	M
22	N
25	O
30	P
34	W
35	Q
40	R
42	4
45	6
51	S
63.5	T
76	U
80	8
90	X
100	Z
Len. (mm)	Code
4.5	45
5	05
5.4	54
7	07
7.7	77
10.2	T2
11	11
11.5	1A
12	12
12.5	1B
13	13
13.5	1C
20	20
25	25
29.5	2J
30	30
31.5	3A
35	35
35.5	3E
50	50
80	80
100	1L
105	1K
110	1M
120	1N
130	1P
140	1Q
150	1R
155	1E
160	1S
165	1F
170	1T
180	1U
190	1V
200	2L
215	2A
210	2M
220	2N
240	2Q
250	2R
260	2S
270	2T

Feature	Code
Radial bulk	RR
Ammo Taping	
2.0mm Pitch	TT
2.5mm Pitch	TU
3.5mm Pitch	TV
5.0mm Pitch	TC
Lead Cut & Form	
CB-Type	CB
CE-Type	CE
HE-Type	HE
KD-Type	KD
FD-Type	FD
EH-Type	EH
PCB Terminal	
Snap-in	SW
	SX
	SZ
Lug	SG
Screw	O5
	O6
	T5
	T6
	D5
	D6

SAMXON Product Line
For internal use only (The product lines we have H,A,B,C,D,E,M or 0,1,2,3,4,5,9).

Sleeve Material	Code
PET	P
PVC	If the sleeve material is PVC, there will be blank in seventeenth digit.

* Automative

Taping Specifications (編帶產品規格)

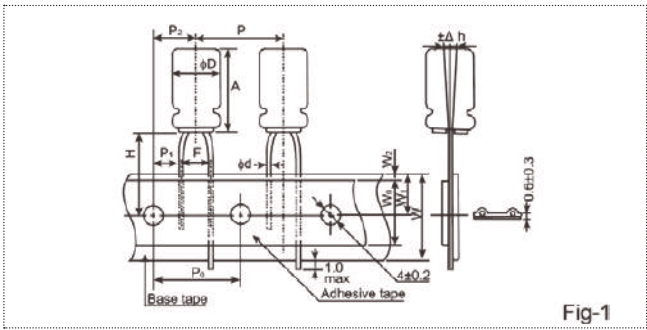

Fig-1

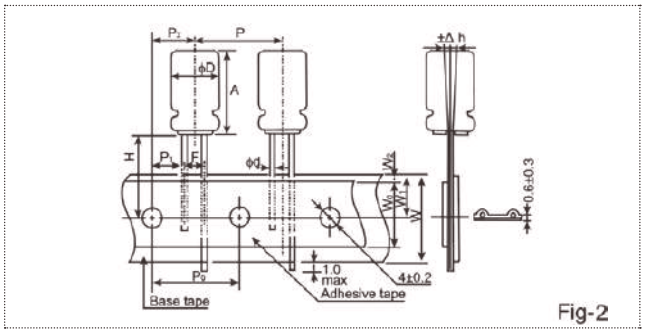

Fig-2

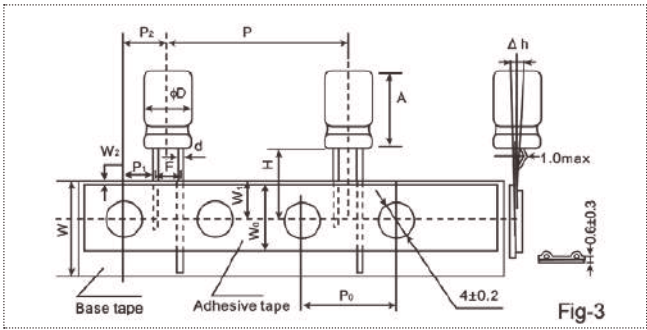

Fig-3

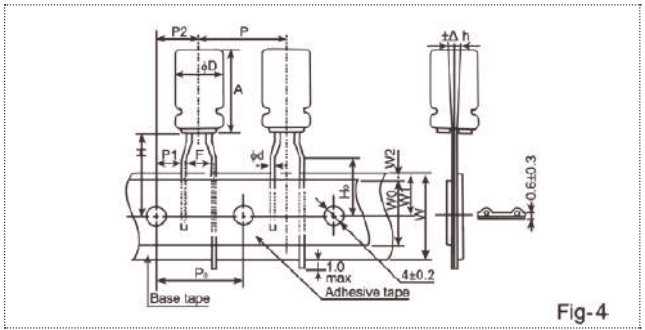

Fig-4

SPECIFICATIONS

Item		Dimensions (mm)													
Reference figure		Fig 1			Fig 2					Fig 3	Fig 4				Tol.
Diameter	D	3	4 ~ 5	5	6.3		8	10	12.5	16, 18	4, 5, 6.3	5, 6.3	8		
Height	A	5	5 ~ 7	9 ~ 15	5 ~ 7	9 ~ 15	11 ~ 20	9 ~ 21	15 ~ 35	15 ~ 40	5 ~ 7	9 ~ 15	5 ~ 9	11 ~ 20	
Lead Diameter	d	0.4	0.45	0.5	0.45	0.5	0.5	0.6	0.6	0.8	0.45	0.5	0.45	0.5	±0.05
Component Spacing	P	12.7			12.7		12.7	12.7	15	30	12.7		12.7		±1.0
Pitch of sprocket holes	P_0	12.7			12.7		12.7	12.7	15	15	12.7		12.7		±0.2
Distance between centres of component leads	F	2.5			2.5		3.5	5.0	5.0	7.5	5.0		5.0		$\pm^{0.8}_{0.5}$
Carrier tape width	W	18.0			18.0		18.0	18.0	18.0	18.0	18.0		18.0		±0.5
Distance between the center of upper edge of carrier tape and sprocket holes	W_1	9.0			9.0		9.0	9.0	9.0	9.0	9.0		9.0		±0.5
Distance between the abscissa and the bottom of the components body	H	18.5			18.5		18.5	18.5	18.5	18.5	17.5	18.5	17.5	20.0	$\pm^{0.75}_{0.5}$
Distance between the abscissa and the reference plane of the components with crimped leads	H_0	–			–		–	–	–	–	16.0		16.0		±0.5
Hold down tape width	W_0	7.0			7.0		7.0	7.0	12	12	7.0		7.0		Min.
Max. lateral deviation of the component body vertical to the tape plane	△h	0			0		0	0	0	0	0		0		±1.0
Distance between the upper edges of the carrier tape and the hold down tape	W_2	0 ~ 3			0 ~ 3		0 ~ 3	0 ~ 3	0 ~ 3	0 ~ 3	0 ~ 3		0 ~ 3		–
Distance between center of terminal and the sprocket holes	P_1	5.1			5.1		4.6	3.85	5.0	3.75	3.85		3.85		±0.5
Distance between center of the component and sprocket holes	P_2	6.35			6.35		6.35	6.35	7.5	7.5	6.35		6.35		±1.0

Packing Specifications (包裝規格)

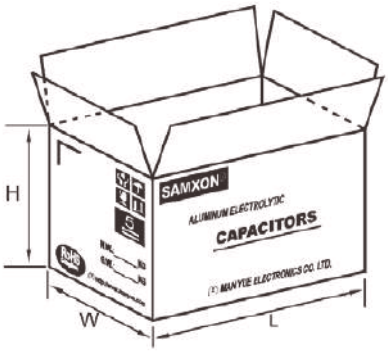

PACKING QUANTITY (TAPING TYPE)

ΦD x L (mm)	L (mm)	W (mm)	H (mm)	Inner Box Quantity	Outer Box Quantity
3 x 5	330	229	51	3,000	30,000
4 x 5 ~ 7	330	229	51	2,500	25,000
5 x 5 ~ 11	330	229	51	2,000	20,000
6.3 x 5 ~ 12	330	229	51	1,500	15,000
8 x 5 ~ 12	330	229	51	1,000	10,000
8 x 14 ~ 20	330	229	64	1,000	8,000
10 x 12.5	330	191	51	500	5,000
10 x 16	330	191	56	500	5,000
10 x 20 ~ 25	323	191	64	500	4,000
10 x 30	330	191	69	500	4,000
12.5 x 20	325	267	58	500	2,000
12.5 x 25	325	270	63	500	2,000
12.5 x 35	325	270	74	500	2,000
16 x 25	315	221	63	250	1,000
16 x 30 ~ 35	315	221	76	250	1,500
18 x 20 ~ 25	343	275	63	250	1,000
18 x 30 ~ 35	343	275	73	250	500
18 x 40	343	275	73	250	500

PACKING QUANTITY (BULK TYPE)

Long Lead Wire Product			
ΦD x L (mm)	Plastic Bag Quantity	Inner Box Quantity	Outer Box Quantity
3 x 5	1,000	24,000	96,000
4 x 5	1,000	16,000	64,000
4 x 7	1,000	14,000	56,000
5 x 5	1,000	12,000	48,000
5 x 7	1,000	10,000	40,000
5 x 11	1,000	8,000	32,000
6.3 x 5 ~ 7	1,000	8,000	32,000
6.3 x 11	1,000	6,000	24,000
8 x 5 ~ 7	1,000	6,000	24,000
8 x 9	500	4,000	16,000
8 x 10 ~ 16	500	3,000	12,000
8 x 20	200	1,600	6,400
8 x 25	200	1,200	4,800
10 x 12.5	400	2,400	9,600
10 x 15 ~ 20	200	1,200	7,200
10 x 25 ~ 30	200	1,200	4,800
12.5 x 20	150	1,200	4,800
12.5 x 25	150	900	3,600
12.5 x 30 ~ 35	100	600	2,400
12.5 x 40	–	300	1,800
16 x 20	–	200	2,000
16 x 25 ~ 30	–	200	1,600
16 x 35 ~ 40	–	200	1,200
18 x 15 ~ 20	–	150	1,500
18 x 25 ~ 30	–	150	1,200
18 x 35 ~ 50	–	150	900

PACKING QUANTITY (SNAP-IN)

Snap-in Terminal Product					
ΦD x L (mm)	Inner Box Quantity	Outer Box Quantity	ΦD x L (mm)	Inner Box Quantity	Outer Box Quantity
20 x 25	100	1,200	25 x 30 ~ 35	100	800
20 x 30 ~ 40	100	1,000	25 x 40 ~ 50	100	600
22 x 25	100	1,200	30 x 30 ~ 35	50	500
22 x 30 ~ 40	100	1,000	30 x 40 ~ 50	50	400
22 x 45 ~ 50	100	800	35 x 30 ~ 35	40	400
25 x 25	100	1,000	35 x 40 ~ 50	40	320

Lead Forming Specifications (成型產品規格)

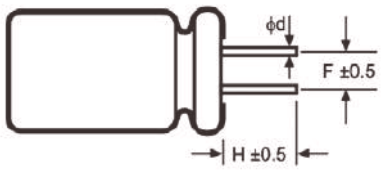

TYPE CB

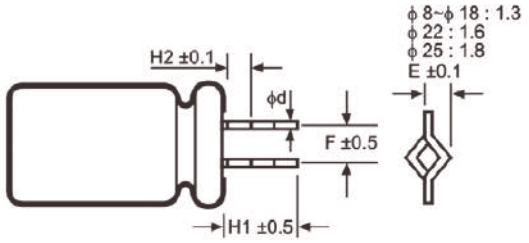

TYPE KD

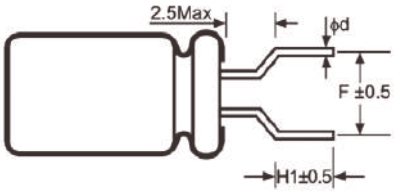

TYPE HE

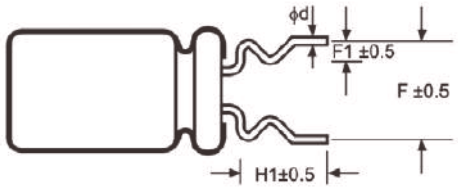

TYPE EC

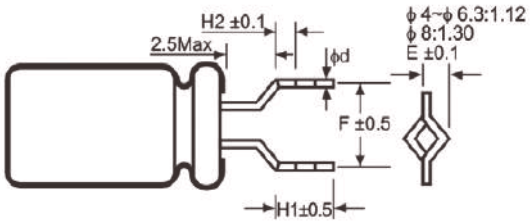

TYPE FD

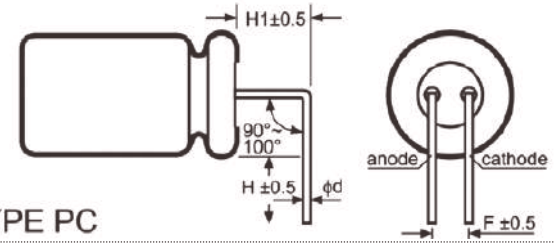

TYPE PC

SHAPE CODE	ΦD	4	5	6.3	8 (L >5mm)	10	13	16	18
CB	F	1.5	2.0	2.5	3.5	5.0	5.0	7.5	7.5
	H	3.5	3.5	3.5	3.5	3.5	3.5	3.5	3.5
	Φd ±0.05	0.45	0.5	0.5	0.5	0.6	0.6	0.8	0.8
HE	F	5.0	5.0	5.0	5.0	–	–	–	–
	H1	5.0	5.0	5.0	5.0	–	–	–	–
	Φd ±0.05	0.45	0.5	0.5	0.5	–	–	–	–
FD	F	5.0	5.0	5.0	5.0	–	–	–	–
	H1	4.5	4.5	4.5	4.5	–	–	–	–
	H2	1.8	1.8	1.8	1.8	–	–	–	–
	Φd ±0.05	0.45	0.5	0.5	0.5	–	–	–	–
	E	1.12	1.12	1.12	1.30	–	–	–	–
KD	F	–	–	–	–	5.0	5.0	7.5	7.5
	H1	–	–	–	–	4.5	4.5	4.5	4.5
	H2	–	–	–	–	2.0	2.0	2.0	2.0
	Φd ±0.05	–	–	–	–	0.6	0.6	0.8	0.8
	E	–	–	–	–	1.30	1.30	1.30	1.30
EC	F	5.0	5.0	5.0	5.0	–	–	–	–
	F1	1.2	1.2	1.2	1.2	–	–	–	–
	H1	4.0	4.0	4.0	4.0	–	–	–	–
	Φd ±0.05	0.45	0.5	0.5	0.5	–	–	–	–
PC	F	–	2.0	2.5	3.5	5.0	5.0	7.5	7.5
	H	–	4.0	4.0	4.0	4.0	4.0	4.0	4.0
	H1	–	3.0	3.0	3.0	3.0	3.0	3.0	3.0
	Φd ±0.05	–	0.5	0.5	0.5	0.6	0.6	0.8	0.8

FEATURES

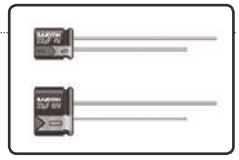

- Super miniature, 5mmL, high temperature, suitable for use in electronic circuit of high density assembly of video recorder, remote controller, VCD etc.

SPECIFICATIONS

Item	Performance Characteristics
Operating Temperature Range	-40 to +105˚C
Rated Working Voltage Range	4 to 50V
Nominal Capacitance Range	3.3 to 330μF
Capacitance Tolerance	±20% at 120Hz, +20˚C
Leakage Current	I ≤0.01CV or 3 (μA) whichever is greater measured after 2 minutes application of rated working voltage at +20˚C
tan δ (120Hz, +20˚C)	Working Voltage (V): 4, 6.3, 10, 16, 25, 35, 50 tan δ (max.): 0.37, 0.28, 0.24, 0.20, 0.16, 0.13, 0.12
Low Temperature Characteristics	Impedance ratio max. at 120Hz Working Voltage (V): 4, 6.3, 10, 16, 25, 35, 50 Z-25˚C / Z+20˚C: 6, 3, 3, 2, 2, 2, 2 Z-40˚C / Z+20˚C: 12, 8, 5, 4, 3, 3, 3
High Temperature Loading	Test time : 1,000 hours Test temperature : +105˚C Test conditions : Rated DC working voltage with rated ripple current Post test requirements at +20˚C Leakage current : ≤Initial specified value Cap. change : within ±20% of the initial measured value (4V: within ±30%) tan δ : ≤200% of the initial specified value
Shelf Life	At +105˚C no voltage applied after 1,000 hours and then being stabilized at +20˚C the capacitors shall meet the following limits Leakage current : ≤Initial specified value Cap. change : within ±20% of the initial measured value (4V: within ±30%) tan δ : ≤200% of the initial specified value
Industrial Standard	JIS C - 5101-4 (IEC 60384-4)

CASE SIZE TABLE

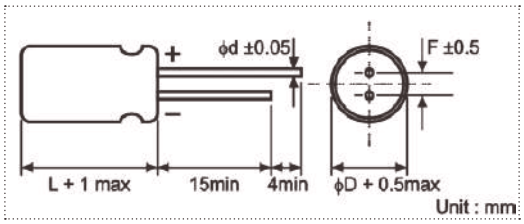

ΦD	4	5	6.3	8
F	1.5	2.0	2.5	2.5
Φd	0.45			

RIPPLE CURRENT MULTIPLIER

Frequency Coefficient

Coefficient / Freq. (Hz) / Cap (μF)	50	120	300	1k	10k~
≤47	0.75	1.00	1.35	1.57	2.00
68~330	0.80	1.00	1.23	1.34	1.50

PART NUMBER SYSTEM (EXAMPLE : 16V 33μF)

1	2 3	4 5 6	7	8 9	10	11 12	13 14
E	KF	336	M	1C	E	05	RR

- Type (Radial Bulk)
- Case Length (5mm)
- Diameter (6.3mm)
- Voltage (16V)
- Tolerance (±20%)
- Capacitance (33μF)
- Series
- E-CAP

SAMXON®
Aluminum Electrolytic Capacitors

5mmL (高), +105˚C

STANDARD RATINGS

Voltage (Code)		4V (0G)		6.3V (0J)		10V (1A)		16V (1C)	
Cap. (μF)	Code	Case Size	Ripple Current	Case Size	Ripple Current	Case Size	Ripple Current	Case Size	Ripple Current
10	106							4 x 5	18
22	226	4 x 5	22	4 x 5	22	4 x 5	24	5 x 5	30
33	336	5 x 5	30	5 x 5	30	5 x 5	35	6.3 x 5	40
47	476	5 x 5	36	5 x 5	36	6.3 x 5	46	6.3 x 5	50
100	107	6.3 x 5	60	6.3 x 5	60	6.3 x 5	67	6.3 x 5	73
220	227			8 x 5	103	8 x 5	116	8 x 5	126
330	337			8 x 5	127				

Maximum Allowable Ripple Current (mArms) at 105˚C 120Hz

Case Size ΦD x L (mm)

Voltage (Code)		25V (1E)		35V (1V)		50V (1H)	
Cap. (μF)	Code	Case Size	Ripple Current	Case Size	Ripple Current	Case Size	Ripple Current
3.3	335			4 x 5	11	4 x 5	14
4.7	475	4 x 5	13	4 x 5	15	5 x 5	19
10	106	4 x 5	20	5 x 5	25	6.3 x 5	30
22	226	6.3 x 5	38	6.3 x 5	48	8 x 5	52
33	336	6.3 x 5	48	6.3 x 5	59	8 x 5	63
47	476	6.3 x 5	58	8 x 5	82		
100	107	8 x 5	97				

Maximum Allowable Ripple Current (mArms) at 105˚C 120Hz

Case Size ΦD x L (mm)

Specifications are subject to change without notice. Should a safety or technical concern arise regarding the product, please be sure to contact our sales offices or agents immediately.

FEATURES

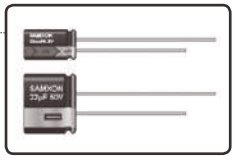

- Rated working voltage range 6.3 to 50V DC operation temperature range -40 to +105˚C.
- This series is for communication equipments, switching power supply, industrial measuring instruments, automotive electric products, etc.

SPECIFICATIONS

Item	Performance Characteristics
Operating Temperature Range	-40 to +105˚C
Rated Working Voltage Range	6.3 to 50V
Nominal Capacitance Range	3.3 to 330μF
Capacitance Tolerance	±20% at 120Hz, +20˚C
Leakage Current	I ≤0.01CV or 3 (μA) whichever is greater measured after 2 minutes application of rated working voltage at +20˚C

tan δ (120Hz, +20˚C)

Working Voltage (V)	6.3	10	16	25	35	50
tan δ (max.)	0.24	0.21	0.18	0.15	0.13	0.12

Low Temperature Characteristics

Impedance ratio max. at 120Hz

Working Voltage (V)	6.3	10	16	25	35	50
Z-25˚C / Z+20˚C	4	2	2	2	2	2
Z-40˚C / Z+20˚C	8	5	4	3	3	3

High Temperature Loading

Test time : 1,000 hours
Test temperature : +105˚C
Test conditions : Rated DC working voltage with rated ripple current

Post test requirements at +20˚C
Leakage current : ≤Initial specified value
Cap. change : within ±20% of the initial measured value
tan δ : ≤200% of the initial specified value

Shelf Life

At +105˚C no voltage applied after 1,000 hours and then being stabilized at +20˚C the capacitors shall meet the following limits
Leakage current : ≤Initial specified value
Cap. change : within ±20% of the initial measured value
tan δ : ≤200% of the initial specified value

Industrial Standard	JIS C - 5101-4 (IEC 60384-4)

CASE SIZE TABLE

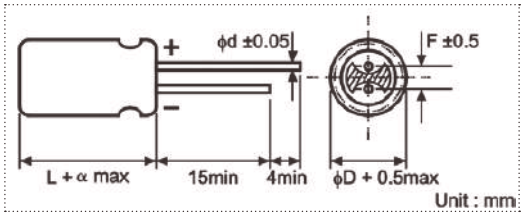

ΦD	4	5	6.3	8
F	1.5	2.0	2.5	3.5
Φd	0.45			
α	(L ≤7) 1		(L ≥9) 1.5	

RIPPLE CURRENT MULTIPLIER

Frequency Coefficient

Coefficient / Freq. (Hz) / Cap (μF)	50	120	300	1k	10k~
≤47	0.75	1.00	1.35	1.57	2.00
68~220	0.80	1.00	1.23	1.34	1.50

PART NUMBER SYSTEM (EXAMPLE : 6.3V 47μF)

1	2 3	4 5 6	7	8 9	10	11 12	13 14
E	KS	476	M	0J	D	07	RR

- Type (Radial Bulk)
- Case Length (7mm)
- Diameter (5mm)
- Voltage (6.3V)
- Tolerance (±20%)
- Capacitance (47μF)
- Series
- E-CAP

SAMXON®
Aluminum Electrolytic Capacitors

7mmL (高), -40˚C~+105˚C

STANDARD RATINGS

Voltage (Code)		6.3V (0J)		10V (1A)		16V (1C)		25V (1E)	
Cap. (μF)	Code	Case Size	Ripple Current	Case Size	Ripple Current	Case Size	Ripple Current	Case Size	Ripple Current
10	106					4 x 7	29	4 x 7	29
22	226	4 x 7	34	4 x 7	34	4 x 7	38	5 x 7	45
33	336	4 x 7	37	4 x 7	40	5 x 7	50	5 x 7	55
47	476	4 x 7	44	5 x 7	50	5 x 7	60	6.3 x 7	67
100	107	5 x 7	67	5 x 7	72	6.3 x 7	92	6.3 x 7	97
				6.3 x 7	83	8 x 7	106	8 x 7	113
220	227	6.3 x 7	112	8 x 7	140	8 x 9	174		
330	337	8 x 7	158						

Maximum Allowable Ripple Current (mArms) at 105˚C 120Hz

Case Size ΦD x L (mm)

Voltage (Code)		35V (1V)		50V (1H)	
Cap. (μF)	Code	Case Size	Ripple Current	Case Size	Ripple Current
3.3	335			4 x 7	24
4.7	475	4 x 7	24	5 x 7	29
10	106	5 x 7	36	5 x 7	38
				6.3 x 7	44
22	226	6.3 x 7	57	8 x 7	65
33	336	6.3 x 7	62		
47	476	6.3 x 7	74		
100	107	8 x 9	65		

Maximum Allowable Ripple Current (mArms) at 105˚C 120Hz

Case Size ΦD x L (mm)

Specifications are subject to change without notice. Should a safety or technical concern arise regarding the product, please be sure to contact our sales offices or agents immediately.

FEATURES

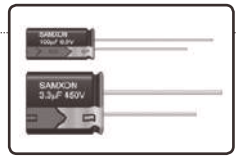

- High CV value, guarantee 2,000 hours load life at 85˚C.
- Suitable for use in electronic circuits in colour TV receiver, video recorder etc.

SPECIFICATIONS

Item	Performance Characteristics	
Operating Temperature Range	-40 to +85˚C	-25 to +85˚C
Rated Working Voltage Range	6.3 to 100V	160 to 450V
Nominal Capacitance Range	2.2 to 22000μF	
Capacitance Tolerance	±20% at 120Hz, +20˚C	
Leakage Current	I ≤0.01CV or 3 (μA) whichever is greater measured after 2 minutes application of rated working voltage at +20˚C	I ≤0.03CV +40 (μA) after 2 minutes application of rated working voltage at +20˚C

tan δ (120Hz, +20˚C)

Working Voltage (V)	6.3	10	16	25	35	50	63	100
tan δ (max.)	0.28	0.24	0.20	0.16	0.14	0.12	0.10	0.08

Working Voltage (V)	160	200	250	350	400	450
tan δ (max.)	0.20	0.20	0.20	0.25	0.25	0.25

For capacitance value >1000μF, add 0.02 per another 1000μF

Low Temperature Characteristics

Impedance ratio max. at 120Hz

Working Voltage (V)	6.3	10	16	25	35	50	63	100
Z-25˚C / Z+20˚C	5	4	3	2	2	2	2	2
Z-40˚C / Z+20˚C	12	10	8	5	4	3	3	3

Working Voltage (V)	160	200	250	350	400	450
Z-25˚C / Z+20˚C	3	3	4	4	6	15

For capacitance value >1000μF, add 0.5 per another 1000μF for Z-25˚C / Z+20˚C
add 1.0 per another 1000μF for Z-40˚C / Z+20˚C

High Temperature Loading

Test time : 2,000 hours
Test temperature : +85˚C
Test conditions : Rated DC working voltage with rated ripple current

Post test requirements at +20˚C
Leakage current : ≤Initial specified value
Cap. change : within ±20% of the initial measured value
tan δ : ≤200% of the initial specified value

Shelf Life

At +85˚C no voltage applied after 1,000 hours and then being stabilized at +20˚C the capacitors shall meet the following limits
Leakage current : ≤Initial specified value
Cap. change : within ±20% of the initial measured value
tan δ : ≤200% of the initial specified value

Industrial Standard: JIS C - 5101-4 (IEC 60384-4)

CASE SIZE TABLE

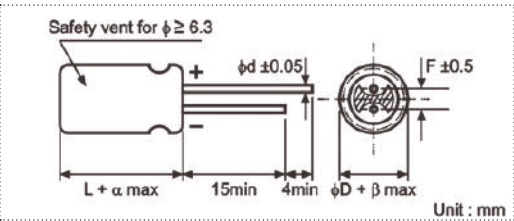

ΦD	8 (L <20)	8 (L ≥20)	10	12.5	16	18	22	25
F	3.5	3.5	5.0	5.0	7.5	7.5	10.0	12.5
Φd	0.5	0.6	0.6	0.6	0.8	0.8	0.8	1.0
α	(L <20) 1.5				(L ≥20) 2.0			
β	(D <20) 0.5				(D ≥20) 1.0			

PART NUMBER SYSTEM (EXAMPLE : 16V 470μF)

1	2 3	4 5 6	7	8 9	10	11 12	13 14
E	GS	477	M	1C	F	12	RR

- 13 14: Type (Radial Bulk)
- 11 12: Case Length (12mm)
- 10: Diameter (8mm)
- 8 9: Voltage (16V)
- 7: Tolerance (±20%)
- 4 5 6: Capacitance (470μF)
- 2 3: Series
- 1: E-CAP

STANDARD RATINGS

Voltage (Code)		6.3V (0J)		10V (1A)		16V (1C)		25V (1E)	
Cap. (μF)	Code	Case Size	Ripple Current	Case Size	Ripple Current	Case Size	Ripple Current	Case Size	Ripple Current
220	227							8 x 12	370
330	337							8 x 12	453
470	477					8 x 12	499	10 x 12.5	628
680	687	8 x 12	503	8 x 12	546	10 x 12.5	690	10 x 16	826
1000	108	8 x 12	610	10 x 12.5	791	10 x 16	928	10 x 20	1094
1500	158	10 x 12.5	780	10 x 16	875	10 x 20	1025	12.5 x 20	1210
2200	228	10 x 16	890	10 x 20	1226	12.5 x 20	1555	12.5 x 25	1800
3300	338	10 x 20	1350	12.5 x 20	1685	12.5 x 25	1990	16 x 25	2304
4700	478	12.5 x 20	1822	12.5 x 25	2103	16 x 25	2487	16 x 30	2854
6800	688	12.5 x 25	1930	16 x 25	2606	16 x 30	3010	16 x 40	3528
								18 x 35	3546
10000	109	16 x 25	2760	16 x 30	2960	16 x 35	3490		
15000	159	16 x 35	2860	16 x 40	3100				
22000	229	18 x 40	3400						

Maximum Allowable Ripple Current (mArms) at 85˚C 120Hz

Case Size ΦD x L (mm)

Voltage (Code)		35V (1V)		50V (1H)		63V (1J)		100V (2A)	
Cap. (μF)	Code	Case Size	Ripple Current	Case Size	Ripple Current	Case Size	Ripple Current	Case Size	Ripple Current
33	336							8 x 12	187
47	476							10 x 12.5	259
68	686					8 x 12	220	10 x 16	290
100	107			8 x 12	306	8 x 12	321	10 x 20	453
220	227	8 x 12	405	10 x 12.5	506	10 x 16	615	12.5 x 20	742
330	337	10 x 12.5	576	10 x 16	706	10 x 20	823	12.5 x 25	987
470	477	10 x 16	753	10 x 20	811	12.5 x 20	1153	16 x 25	1394
680	687	10 x 20	988	12.5 x 20	988	12.5 x 25	1512	16 x 30	1400
1000	108	12.5 x 20	1407	12.5 x 25	1715	16 x 25	2037	18 x 35	1995
2200	228	16 x 25	2134	16 x 30	2320	18 x 35	2300		
3300	338	16 x 30	2338	18 x 35	3218	18 x 40	2500		
4700	478	18 x 35	3400	18 x 40	3336				
5600	568	18 x 40	3411						
6800	688	18 x 40	3500						

Maximum Allowable Ripple Current (mArms) at 85˚C 120Hz

Case Size ΦD x L (mm)

Specifications are subject to change without notice. Should a safety or technical concern arise regarding the product, please be sure to contact our sales offices or agents immediately.

STANDARD RATINGS

Voltage (Code)		160V (2C)		200V (2D)		250V (2E)		350V (2V)	
Cap. (μF)	Code	Case Size	Ripple Current	Case Size	Ripple Current	Case Size	Ripple Current	Case Size	Ripple Current
3.3	335							8 x 12	56
4.7	475							10 x 12.5	77
10	106	8 x 12	82	8 x 12	90	10 x 12.5	113	10 x 16	120
22	226	10 x 16	150	10 x 16	168	10 x 20	185	12.5 x 20	233
33	336	10 x 20	243	10 x 20	245	10 x 20	198	16 x 25	312
47	476	10 x 20	307	12.5 x 20	343	12.5 x 20	235	16 x 25	413
68	686	12.5 x 20	350	12.5 x 25	350	16 x 25	380	16 x 25	450
100	107	12.5 x 25	541	16 x 25	601	16 x 25	572	18 x 35	518
220	227	16 x 30	976	16 x 35	1138				
330	337	18 x 35	1346	18 x 35	1324				

Maximum Allowable Ripple Current (mArms) at 85˚C 120Hz

Case Size ΦD x L (mm)

Voltage (Code)		400V (2G)		450V (2W)	
Cap. (μF)	Code	Case Size	Ripple Current	Case Size	Ripple Current
2.2	225	8 x 12	47	8 x 12	40
3.3	335	8 x 12	55	10 x 12.5	54
4.7	475	10 x 12.5	73	10 x 16	72
10	106	10 x 16	120	10 x 20	98
22	226	12.5 x 20	230	12.5 x 25	202
33	336	16 x 25	345	16 x 25	271
47	476	16 x 25	437	16 x 30	355
68	686	16 x 30	500	18 x 35	360
82	826	16 x 30	550	18 x 40	385
100	107	18 x 35	720		

Maximum Allowable Ripple Current (mArms) at 85˚C 120Hz

Case Size ΦD x L (mm)

RIPPLE CURRENT MULTIPLIER

Frequency Coefficient

Rated Voltage	Coefficient / Freq. (Hz) / Cap (μF)	50	120	300	1k	10k~
6.3~100V	≤47	0.75	1.00	1.35	1.57	2.00
	68~470	0.80	1.00	1.23	1.34	1.50
	≥560	0.85	1.00	1.10	1.13	1.15
160~450V	2.2~220	0.80	1.00	1.25	1.40	1.60
	≥270	0.90	1.00	1.10	1.13	1.15

Specifications are subject to change without notice. Should a safety or technical concern arise regarding the product, please be sure to contact our sales offices or agents immediately.

SAMXON®

Aluminum Electrolytic Capacitors

+105˚C, General (普通品)

FEATURES

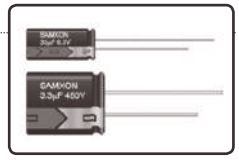

- Rated working voltage range 6.3 to 100V DC / 160 to 550V DC at operation temperature range -40 to +105˚C / -25 to +105˚C.
- This series is for communication equipments, switching power supply, industrial measuring instruments, automotive electric products, etc.

SPECIFICATIONS

Item	Performance Characteristics	
Operating Temperature Range	-40 to +105˚C	-25 to +105˚C
Rated Working Voltage Range	6.3 to 100V	160 to 550V
Nominal Capacitance Range	0.47 to 33000μF	
Capacitance Tolerance	±20% at 120Hz, +20˚C	
Leakage Current	I ≤0.01CV or 3 (μA) whichever is greater measured after 2 minutes application of rated working voltage at +20˚C	I ≤0.03CV +40 (μA) after 2 minutes application of rated working voltage at +20˚C

tan δ (120Hz, +20˚C)

Working Voltage (V)	6.3	10	16	25	35	50	63	100
tan δ (max.)	0.26	0.22	0.18	0.16	0.14	0.12	0.10	0.08
Working Voltage (V)	160	200	220	250	350	400	420	450~550
tan δ (max.)	0.20	0.20	0.20	0.20	0.24	0.24	0.24	0.24

For capacitance value >1000μF, add 0.02 per another 1000μF

Low Temperature Characteristics

Impedance ratio max. at 120Hz

Working Voltage (V)	6.3	10	16	25	35	50	63	100
Z-25˚C / Z+20˚C	5	4	3	2	2	2	2	2
Z-40˚C / Z+20˚C	10	8	6	4	3	3	3	3
Working Voltage (V)	160	200	220	250	350	400	420	450~550
Z-25˚C / Z+20˚C	3	3	3	4	4	6	6	15

For capacitance value >1000μF, add 0.5 per another 1000μF for Z-25˚C / Z+20˚C
add 1.0 per another 1000μF for Z-40˚C / Z+20˚C

High Temperature Loading

Test time : 2,000 hours
Test temperature : +105˚C
Test conditions : Rated DC working voltage with rated ripple current.

Post test requirements at +20˚C
Leakage current : ≤Initial specified value
Cap. change : within ±20% of the initial measured value
tan δ : ≤200% of the initial specified value

Shelf Life

At +105˚C no voltage applied after 1,000 hours and then being stabilized at +20˚C the capacitors shall meet the following limits
Leakage current : ≤Initial specified value
Cap. change : within ±20% of the initial measured value
tan δ : ≤200% of the initial specified value

Industrial Standard	JIS C - 5101-4 (IEC 60384-4)

CASE SIZE TABLE

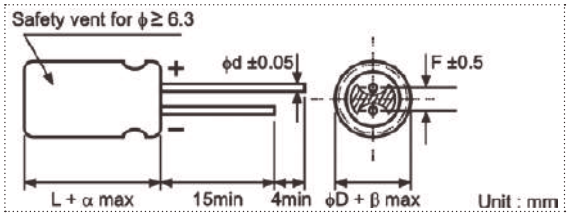

ΦD	5	6.3	8 (L <20)	8 (L ≥20)	10	12.5	16	18	22	25
F	2.0	2.5	3.5	3.5	5.0	5.0	7.5	7.5	10.0	12.5
Φd	0.5	0.5	0.5	0.6	0.6	0.6	0.8	0.8	0.8	1.0
α	(L <20) 1.5						(L ≥20) 2.0			
β	(D <20) 0.5						(D ≥20) 1.0			

PART NUMBER SYSTEM (EXAMPLE : 25V 330μF)

1	2 3	4 5 6	7	8 9	10	11 12	13 14
E	KM	337	M	1E	F	12	RR

- 13 14: Type (Radial Bulk)
- 11 12: Case Length (12mm)
- 10: Diameter (8mm)
- 8 9: Voltage (25V)
- 7: Tolerance (±20%)
- 4 5 6: Capacitance (330μF)
- 2 3: Series
- 1: E-CAP

STANDARD RATINGS

Voltage (Code)		6.3V (0J)		10V (1A)		16V (1C)		25V (1E)	
Cap. (μF)	Code	Case Size	Ripple Current	Case Size	Ripple Current	Case Size	Ripple Current	Case Size	Ripple Current
4.7	475							5 x 11	26
10	106					5 x 11	35	5 x 11	38
22	226			5 x 11	49	5 x 11	54	5 x 11	57
33	336	5 x 11	54	5 x 11	60	5 x 11	64	5 x 11	75
47	476	5 x 11	65	5 x 11	70	5 x 11	80	5 x 11	84
68	686	5 x 11	70	5 x 11	75	5 x 11	90	5 x 11	92
100	107	5 x 11	95	5 x 11	105	5 x 11	125	5 x 11	140
						6.3 x 11	142	6.3 x 11	159
220	227	5 x 11	153	5 x 11	170	6.3 x 11	213	8 x 12	285
				6.3 x 11	193				
330	337	6.3 x 11	216	6.3 x 11	239	8 x 12	315	8 x 12	340
470	477	6.3 x 11	258	6.3 x 11	285	8 x 12	366	8 x 12	406
						10 x 12.5	400	10 x 12.5	471
680	687	8 x 12	365	8 x 12	408	10 x 12.5	480	10 x 16	620
1000	108	8 x 12	443	10 x 12.5	571	8 x 20	663	10 x 20	821
						10 x 16	680		
						10 x 20	723		
2200	228	10 x 16	740	10 x 20	886	10 x 20	980	12.5 x 20	1176
						12.5 x 20	1108	12.5 x 25	1296
3300	338	10 x 20	1032	12.5 x 20	1205	12.5 x 25	1389	16 x 25	1646
4700	478	12.5 x 20	1280	12.5 x 25	1492	16 x 25	1740	16 x 30	2012
6800	688	12.5 x 25	1554	16 x 25	1824	16 x 30	2081	16 x 35	2308
10000	109	16 x 25	1897	16 x 30	1980	16 x 35	2379	18 x 35	2500
15000	159	16 x 30	2188	16 x 40	2180	18 x 35	2600		
22000	229	18 x 35	2400	18 x 40	2407				
33000	339	18 x 40	2555						

Maximum Allowable Ripple Current (mArms) at 105˚C 120Hz

Case Size ΦD x L (mm)

Voltage (Code)		35V (1V)		50V (1H)		63V (1J)		100V (2A)	
Cap. (μF)	Code	Case Size	Ripple Current	Case Size	Ripple Current	Case Size	Ripple Current	Case Size	Ripple Current
1	105			5 x 11	13			5 x 11	16
2.2	225			5 x 11	20			5 x 11	23
3.3	335			5 x 11	30			5 x 11	34
4.7	475	5 x 11	28	5 x 11	37	5 x 11	40	5 x 11	40
10	106	5 x 11	41	5 x 11	54	5 x 11	59	6.3 x 11	61
22	226	5 x 11	67	5 x 11	79	5 x 11	79	6.3 x 11	92
33	336	5 x 11	80	5 x 11	101	6.3 x 11	122	8 x 12	144
47	476	5 x 11	101	6.3 x 11	133	6.3 x 11	146	10 x 12.5	199
68	686	6.3 x 11	138	6.3 x 11	160	8 x 12	155	10 x 16	240
100	107	6.3 x 11	168	8 x 12	229	10 x 12.5	251	10 x 20	349
		8 x 12	198						
220	227	8 x 12	294	10 x 16	509	10 x 20	504	12.5 x 25	662
330	337	8 x 16	330	10 x 16	589	12.5 x 20	688	12.5 x 25	800
		10 x 12.5	419						
470	477	10 x 16	547	10 x 20	707	12.5 x 20	810	16 x 25	990
		10 x 20	567						
680	687	10 x 20	682	12.5 x 20	923	12.5 x 25	1160	16 x 30	1289
1000	108	12.5 x 20	1023	12.5 x 25	1287	16 x 25	1448	18 x 35	1903
				16 x 25	1478			18 x 40	2020
1200	128	12.5 x 20	1120						
1500	158	12.5 x 25	1300						
2200	228	16 x 25	1497	16 x 30	1759	18 x 35	1781		
				16 x 35	1884				
3300	338	16 x 30	1808	18 x 35	2167				
4700	478	18 x 35	2335						
6800	688	18 x 40	2400						

Maximum Allowable Ripple Current (mArms) at 105˚C 120Hz

Case Size ΦD x L (mm)

Specifications are subject to change without notice. Should a safety or technical concern arise regarding the product, please be sure to contact our sales offices or agents immediately.

STANDARD RATINGS

Voltage (Code)		160V (2C)		200V (2D)		220V (2N)		250V (2E)	
Cap. (μF)	Code	Case Size	Ripple Current	Case Size	Ripple Current	Case Size	Ripple Current	Case Size	Ripple Current
0.47	474							6.3 x 11	8
1	105							6.3 x 11	17
2.2	225							6.3 x 11	27
3.3	335			6.3 x 11	30	6.3 x 11	30	6.3 x 11	35
4.7	475	6.3 x 11	41	6.3 x 11	40	8 x 12	40	8 x 12	45
10	106	8 x 12	60	10 x 12.5	72	10 x 12.5	70	10 x 12.5	75
				10 x 16	79				
22	226	10 x 12.5	100	10 x 16	113	10 x 20	125	10 x 20	130
		10 x 16	110						
33	336	10 x 20	156	10 x 20	165	12.5 x 20	165	12.5 x 20	184
47	476	10 x 20	195	10 x 20	194	12.5 x 20	220	12.5 x 25	238
				12.5 x 16	185				
68	686	12.5 x 20	250	12.5 x 20	226	12.5 x 25	245	16 x 20	246
				12.5 x 25	250				
82	826	12.5 x 25	310	10 x 30	320	12.5 x 30	280	16 x 25	351
100	107	12.5 x 25	360	16 x 20	357	16 x 25	335	16 x 25	390
				16 x 25	386			16 x 30	422
150	157	12.5 x 30	380	16 x 25	525	16 x 30	365	18 x 25	406
180	187	12.5 x 35	420	12.5 x 35	560	16 x 35	500	18 x 35	469
220	227	16 x 30	680	16 x 30	643	16 x 40	615	18 x 35	485
				18 x 25	635				
270	277	16 x 30	728	18 x 30	740				
330	337	18 x 35	830	18 x 30	808				
				18 x 35	864				
390	397	18 x 35	850	18 x 35	904	18 x 40	959		
470	477	18 x 40	880	18 x 40	1016				
560	567	18 x 45	925	18 x 45	1112				

Maximum Allowable Ripple Current (mArms) at 105˚C 120Hz

Case Size ΦD x L (mm)

Specifications are subject to change without notice. Should a safety or technical concern arise regarding the product, please be sure to contact our sales offices or agents immediately.

STANDARD RATINGS

Voltage (Code)		350V (2V)		400V (2G)		420V (2M)		450V (2W)	
Cap. (μF)	Code	Case Size	Ripple Current	Case Size	Ripple Current	Case Size	Ripple Current	Case Size	Ripple Current
0.47	474	6.3 x 11	8	6.3 x 11	8	6.3 x 11	8		
1	105	6.3 x 11	18	6.3 x 9	17	6.3 x 11	15	6.3 x 11	16
				6.3 x 11	19				
2.2	225	6.3 x 11	25	6.3 x 11	25	8 x 12	29	8 x 12	24
				8 x 12	30				
3.3	335	8 x 12	40	6.3 x 11	30	8 x 12	35	8 x 12	29
				8 x 9	31				
				8 x 12	35				
4.7	475	8 x 12	43	8 x 12	40	10 x 12.5	46	10 x 12.5	37
				10 x 12.5	46			10 x 16	42
5.6	565							8 x 16	40
6.8	685			8 x 16	53	8 x 16	53	10 x 16	50
				10 x 12.5	56				
10	106	10 x 16	73	8 x 16	68	10 x 12.5	65	10 x 16	66
				10 x 12.5	70	10 x 16	77	10 x 20	74
				10 x 16	78	10 x 20	85		
12				10 x 12.5	76				
				10 x 20	90				
15	156			12.5 x 16	92			10 x 16	73
18	186	12.5 x 20	100	12.5 x 20	105	12.5 x 25	124	10 x 30	108
22	226	12.5 x 20	150	12.5 x 20	148	12.5 x 20	126	12.5 x 20	118
				12.5 x 25	163	12.5 x 25	140	12.5 x 25	131
27	276	12.5 x 25	177	10 x 30	192	12.5 x 25	170	12.5 x 30	164
				12.5 x 20	181				
33	336	16 x 25	200	12.5 x 20	175	16 x 25	200	12.5 x 30	181
				12.5 x 25	193			16 x 20	215
				16 x 20	209			16 x 25	237
39	396	16 x 25	258	16 x 25	251	12.5 x 30	248	12.5 x 35	256
47	476	16 x 25	265	12.5 x 25	245	12.5 x 35	288	16 x 25	281
				12.5 x 30	266	18 x 20	277	16 x 30	305
				16 x 20	256				
56	566	16 x 30	280	12.5 x 30	313	12.5 x 40	344	16 x 30	342
				12.5 x 35	336				
68	686	16 x 30	288	16 x 25	365	16 x 30	408	16 x 30	352
				16 x 30	396			18 x 25	352
				18 x 20	356			18 x 30	366
82	826	18 x 30	372	16 x 30	414	16 x 35	456	18 x 30	440
				18 x 25	409	18 x 25	420	18 x 34	462
				18 x 30	443				
100	107	18 x 35	460	16 x 30	457	18 x 30	440	16 x 35	459
				18 x 25	452	18 x 35	488	18 x 30	457
				18 x 30	489			18 x 35	490
120	127			16 x 40	567	16 x 35	464	18 x 40	592
				18 x 30	532	18 x 30	464		
				18 x 35	570	18 x 35	482		
150	157			16 x 40	577	18 x 35	507	18 x 40	606
				18 x 35	580	18 x 45	568	18 x 45	640
				18 x 40	616				
180	187			18 x 40	636	18 x 40	573		
				18 x 50	704	18 x 45	622		

Maximum Allowable Ripple Current (mArms) at 105°C 120Hz

Case Size ΦD x L (mm)

Specifications are subject to change without notice. Should a safety or technical concern arise regarding the product, please be sure to contact our sales offices or agents immediately.

STANDARD RATINGS

Voltage (Code)		500V (2H)		550V (25)	
Cap. (μF)	Code	Case Size	Ripple Current	Case Size	Ripple Current
1	105	8 x 12	20		
2.2	225	8 x 12	30	10 x 12.5	30
3.3	335	8 x 16	40	10 x 16	42
		10 x 12.5	40		
4.7	475	10 x 16	48	10 x 20	55
		10 x 20	58		
10	106	10 x 20	90	12.5 x 20	95
		12.5 x 20	100	12.5 x 25	100
18	186	12.5 x 25	150	12.5 x 30	150
22	226	12.5 x 30	180	16 x 25	170
		16 x 25	190	18 x 20	170
33	336	16 x 30	240	16 x 35	240
		18 x 25	240	18 x 35	240
47	476	18 x 30	360	18 x 35	310
		16 x 35	360	16 x 40	310
56	566	16 x 40	420	16 x 45	350
		18 x 35	420	18 x 40	350
68	686	18 x 35	460	18 x 45	400
		16 x 45	480		
82	826	18 x 40	510		
100	107	18 x 45	600		

Maximum Allowable Ripple Current (mArms) at 105˚C 120Hz

Case Size ΦD x L (mm)

RIPPLE CURRENT MULTIPLIER

Frequency Coefficient

Rated Voltage	Coefficient / Freq. (Hz) / Cap (μF)	50	120	300	1k	10k~
6.3~100V	≤47	0.75	1.00	1.35	1.57	2.00
	68~470	0.80	1.00	1.23	1.34	1.50
	≥560	0.85	1.00	1.10	1.13	1.15
160~550V	0.47~220	0.80	1.00	1.25	1.40	1.60
	≥270	0.90	1.00	1.10	1.13	1.15

Specifications are subject to change without notice. Should a safety or technical concern arise regarding the product, please be sure to contact our sales offices or agents immediately.

FEATURES

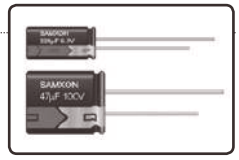

- For general purpose, -55˚C to +105˚C, 1,000 to 2,000 hours.
- Wide CV value range.
- Safety vent construction products.

SPECIFICATIONS

Item	Performance Characteristics
Operating Temperature Range	-55 to +105˚C
Rated Working Voltage Range	6.3 to 100V
Nominal Capacitance Range	2.2 to 22000μF
Capacitance Tolerance	±20% at 120Hz, +20˚C
Leakage Current	I ≤0.01CV or 3 (μA) whichever is greater measured after 2 minutes application of rated working voltage at +20˚C
tan δ (120Hz, +20˚C)	Working Voltage (V): 6.3, 10, 16, 25, 35, 50, 63, 100 tan δ (max.): 0.28, 0.24, 0.20, 0.16, 0.14, 0.12, 0.10, 0.08 For capacitance value >1000μF, add 0.02 per another 1000μF
Low Temperature Characteristics	Impedance ratio max. at 120Hz Working Voltage (V): 6.3, 10, 16, 25, 35, 50, 63, 100 Z-25˚C / Z+20˚C: 4, 3, 2, 2, 2, 2, 2, 2 Z-40˚C / Z+20˚C: 10, 8, 6, 4, 3, 3, 3, 3 For capacitance value >1000μF, add 0.5 per another 1000μF for Z-25˚C / Z+20˚C add 1.0 per another 1000μF for Z-40˚C / Z+20˚C
High Temperature Loading	Test time : ΦD: 5 ~ 8, 10 ~18; Load life: 1,000h, 2,000h Test temperature : +105˚C Test conditions : Rated DC working voltage with rated ripple current Post test requirements at +20˚C Leakage current : ≤Initial specified value Cap. change : within ±20% of the initial measured value tan δ : ≤200% of the initial specified value
Shelf Life	At +105˚C no voltage applied after 1,000 hours and then being stabilized at +20˚C the capacitors shall meet the following limits Leakage current : ≤Initial specified value Cap. change : within ±20% of the initial measured value tan δ : ≤200% of the initial specified value
Industrial Standard	JIS C - 5101-4 (IEC 60384-4)

CASE SIZE TABLE

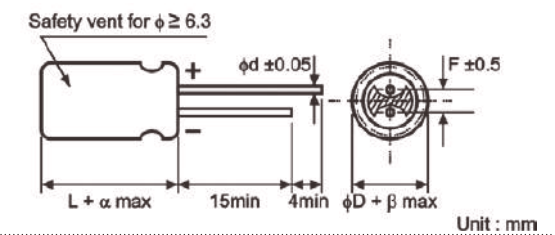

ΦD	5	6.3	8 (L <20)	8 (L ≥20)	10	12.5	16	18
F	2.0	2.5	3.5	3.5	5.0	5.0	7.5	7.5
Φd	0.5	0.5	0.5	0.6	0.6	0.6	0.8	0.8
α	(L <20) 1.5					(L ≥20) 2.0		
β	(D <20) 0.5					(D ≥20) 1.0		

PART NUMBER SYSTEM (EXAMPLE : 16V 470μF)

1	2 3	4 5 6	7	8 9	10	11 12	13 14
E	KG	477	M	1C	F	12	RR

- Type (Radial Bulk)
- Case Length (12mm)
- Diameter (8mm)
- Voltage (16V)
- Tolerance (±20%)
- Capacitance (470μF)
- Series
- E-CAP

SAMXON®
Aluminum Electrolytic Capacitors

-55˚C~+105˚C, Wide Temperature (寬溫度)

STANDARD RATINGS

Voltage (Code)		6.3V (0J)		10V (1A)		16V (1C)		25V (1E)	
Cap. (μF)	Code	Case Size	Ripple Current	Case Size	Ripple Current	Case Size	Ripple Current	Case Size	Ripple Current
47	476							5 x 11	91
100	107					5 x 11	110	6.3 x 11	130
220	227	5 x 11	140			6.3 x 11	180	8 x 12	230
330	337			6.3 x 11	200	8 x 12	260	8 x 12	310
470	477	6.3 x 11	230	6.3 x 11	240	8 x 12	310	10 x 12.5	380
1000	108	8 x 12	380	10 x 12.5	460	10 x 16	560	10 x 20	680
2200	228	10 x 16	710	10 x 20	760	12.5 x 20	920	12.5 x 20	988
3300	338	10 x 20	840	12.5 x 20	1000	12.5 x 25	1170	16 x 25	1400
4700	478	12.5 x 20	1090	12.5 x 25	1260	16 x 25	1480	16 x 30	1750
6800	688	12.5 x 25	1350	16 x 25	1570	16 x 30	1780	16 x 35	1910
10000	109	16 x 25	1650	16 x 30	1890	16 x 35	1930		
15000	159	16 x 30	2010	16 x 40	2170				
22000	229	18 x 35	2350						

Maximum Allowable Ripple Current (mArms) at 105˚C 120Hz

Case Size ΦD x L (mm)

Voltage (Code)		35V (1V)		50V (1H)		63V (1J)		100V (2A)	
Cap. (μF)	Code	Case Size	Ripple Current	Case Size	Ripple Current	Case Size	Ripple Current	Case Size	Ripple Current
2.2	225			5 x 11	18			5 x 11	21
3.3	335			5 x 11	22			5 x 11	31
4.7	475			5 x 11	26			5 x 11	38
10	106			5 x 11	39	5 x 11	46	6.3 x 11	54
22	226			5 x 11	65	5 x 11	71	6.3 x 11	93
33	336			5 x 11	90	6.3 x11	100	8 x 12	130
47	476	5 x 11	90	6.3 x11	110	6.3 x11	120	10 x 12.5	165
100	107	6.3 x 11	150	8 x 12	180	10 x 12.5	215	10 x 20	265
220	227	8 x 12	270	10 x 16	330	10 x 20	370	12.5 x 25	440
330	337	10 x 12.5	350	10 x 16	410	12.5 x 20	578	12.5 x 25	600
470	477	10 x 16	460	10 x 20	530	12.5 x 20	640	16 x 25	715
1000	108	12.5 x 20	810	12.5 x 25	950	16 x 25	930	18 x 40	1040
2200	228	16 x 25	1260	16 x 35	1570	18 x 35	1610		
3300	338	16 x 30	1610	18 x 35	1770				
4700	478	18 x 35	1910						

Maximum Allowable Ripple Current (mArms) at 105˚C 120Hz

Case Size ΦD x L (mm)

RIPPLE CURRENT MULTIPLIER

Frequency Coefficient

Coefficient / Freq. (Hz) / Cap (μF)	60	120	1k	10k	100k
0.1~33	0.75	1.00	1.55	1.80	2.00
47~470	0.80	1.00	1.35	1.50	1.50
1000~22000	0.85	1.00	1.10	1.15	1.15

Specifications are subject to change without notice. Should a safety or technical concern arise regarding the product, please be sure to contact our sales offices or agents immediately.

FEATURES

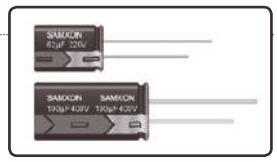

- Doesn't spark with DC over voltage.
- Load life: 2,000 hours at 105˚C.

SPECIFICATIONS

Item	Performance Characteristics
Operating Temperature Range	-25 to +105˚C
Rated Working Voltage Range	200 & 400V
Nominal Capacitance Range	22 to 330μF
Capacitance Tolerance	±20% at 120Hz, +20˚C
Leakage Current	I ≤0.03CV +40 (μA) after 2 minutes application of rated working voltage at +20˚C
tan δ (120Hz, +20˚C)	Working Voltage (V): 200, 400 tan δ (max.): 0.20, 0.24
Low Temperature Characteristics	Impedance ratio max. at 120Hz Rated Voltage (V): 200, 400 Z-25˚C / Z+20˚C: 3, 6
High Temperature Loading	Test time : 2,000 hours Test temperature : +105˚C Test conditions : Rated DC working voltage with rated ripple current Post test requirements at +20˚C Leakage current : ≤Initial specified value Cap. change : within ±20% of the initial measured value tan δ : ≤200% of the initial specified value
Shelf Life	At +105˚C no voltage applied after 1,000 hours and then being stabilized at +20˚C the capacitors shall meet the following limits Leakage current : ≤Initial specified value Cap. change : within ±20% of the initial measured value tan δ : ≤200% of the initial specified value
Industrial Standard	JIS C - 5101-4 (IEC 60384-4)

CASE SIZE TABLE

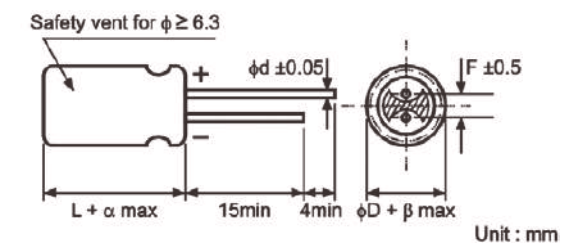

ΦD	16	18
F	7.5	7.5
Φd	0.8	0.8
α	(L <20) 1.5	(L ≥20) 2.0
β	(D <20) 0.5	(D ≥20) 1.0

RIPPLE CURRENT MULTIPLIER

Frequency Coefficient

Coefficient / Freq. (Hz) / Cap (μF)	50	120	300	1k	10k~
22~220	0.80	1.00	1.25	1.40	1.60
270~330	0.90	1.00	1.10	1.13	1.15

PART NUMBER SYSTEM (EXAMPLE : 200V 100μF)

1	2 3	4 5 6	7	8 9	10	11 12	13 14
E	OM	107	M	2D	K	25	RR

- Type (Radial Bulk)
- Case Length (25mm)
- Diameter (16mm)
- Voltage (200V)
- Tolerance (±20%)
- Capacitance (100μF)
- Series
- E-CAP

SAMXON®
Aluminum Electrolytic Capacitors

+105˚C, Withstanding Overvoltage Design (耐過電壓品)

STANDARD RATINGS

Voltage (Code)		200V (2D)		400V (2G)	
Cap. (μF)	Code	Case Size	Ripple Current	Case Size	Ripple Current
22	226			16 x 20	145
33	336			16 x 25	220
				18 x 20	225
39	396			16 x 30	245
				18 x 25	250
47	476			16 x 30	275
				18 x 25	280
56	566			16 x 40	350
				18 x 30	315
68	686			18 x 35	350
82	826	16 x 20	230	18 x 40	395
100	107	16 x 25	425	18 x 40	450
		18 x 20	250		
120	127	16 x 30	500		
		18 x 25	475		
150	157	16 x 30	560		
		18 x 25	530		
180	187	16 x 40	645		
		18 x 30	630		
220	227	18 x 35	725		
270	277	18 x 45	830		
330	337	18 x 45	920		

Maximum Allowable Ripple Current (mArms) at 105˚C 120Hz

Case Size ΦD x L (mm)

DC OVERVOLTAGE TEST CONDITIONS

They vent will operate and the capacitor shall become an open circuit without buming materials when the following excess DC voltage is applied.

- **Test DC voltage**

Rated voltage	Current limit	Test DC voltage
200Vdc	4A	300 / 375Vdc
400Vdc	2A	500 / 600Vdc

- **Test circuit**

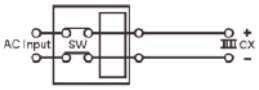

Constant DC voltage / current power supply

Specifications are subject to change without notice. Should a safety or technical concern arise regarding the product, please be sure to contact our sales offices or agents immediately.

FEATURES

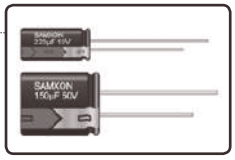

- Low impedance for high frequency.
- Life time: 1,000~4,000 hours at 105˚C.

SPECIFICATIONS

Item	Performance Characteristics
Operating Temperature Range	-40 to +105˚C
Rated Working Voltage Range	6.3 to 100V
Nominal Capacitance Range	3.3 to 4700μF
Capacitance Tolerance	±20% at 120Hz, +20˚C
Leakage Current	I ≤0.01CV or 3 (μA) whichever is greater measured after 2 minutes application of rated working voltage at +20˚C
tan δ (120Hz, +20˚C)	Working Voltage (V): 6.3, 10, 16, 25, 35, 50, 63, 100 tan δ (max.): 0.22, 0.19, 0.16, 0.14, 0.12, 0.10, 0.09, 0.08 For capacitance value >1000μF, add 0.02 per another 1000μF
Low Temperature Characteristics	Impedance ratio max. at 120Hz Working Voltage (V): 6.3, 10, 16, 25, 35, 50, 63, 100 Z-25˚C / Z+20˚C: 4, 3, 2, 2, 2, 2, 2, 2 Z-40˚C / Z+20˚C: 8, 6, 4, 3, 3, 3, 3, 3
High Temperature Loading	Test time : L / ΦD: L≤7, D5~6.3, D8~10, D12.5; Load life: 1,000h, 2,000h, 3,000h, 4,000h Test temperature : +105˚C Test conditions : Rated DC working voltage with rated ripple current Post test requirements at +20˚C Leakage current : ≤Initial specified value Cap. change : within ±25% of the initial measured value tan δ : ≤150% of the initial specified value
Shelf Life	At +105˚C no voltage applied after 1,000 hours and then being stabilized at +20˚C the capacitors shall meet the following limits Leakage current : ≤Initial specified value Cap. change : within ±25% of the initial measured value tan δ : ≤150% of the initial specified value
Industrial Standard	JIS C - 5101-4 (IEC 60384-4)

CASE SIZE TABLE

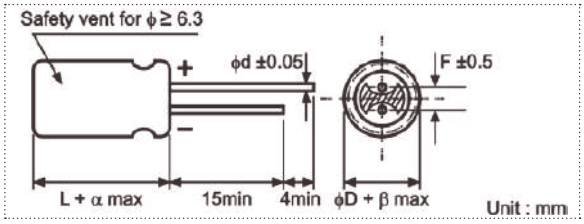

ΦD	4	5	6.3	8 (L <20)	8 (L ≥20)	10	12.5
F	1.5	2.0	2.5	3.5	3.5	5.0	5.0
Φd	0.45	(L ≤7) 0.45	(L ≥9) 0.50		0.6	0.6	0.6
α	(L ≤7) 1		(L ≤9 <20) 1.5		(L ≥20) 2.0		
β	(D <20) 0.5		(D ≥20) 1.0				

PART NUMBER SYSTEM (EXAMPLE : 6.3V 1000μF)

1	2 3	4 5 6	7	8 9	10	11 12	13 14
E	GF	108	M	0J	G	1B	RR

- 13 14: RR — Type (Radial Bulk)
- 11 12: 1B — Case Length (12.5mm)
- 10: G — Diameter (10mm)
- 8 9: 0J — Voltage (6.3V)
- 7: M — Tolerance (±20%)
- 4 5 6: 108 — Capacitance (1000μF)
- 2 3: GF — Series
- 1: E — E-CAP

+105˚C, High Ripple Current (高紋波), Low Impendence (低阻抗品)

STANDARD RATINGS

Voltage (Code)		6.3V (0J)			10V (1A)			16V (1C)		
Cap. (μF)	Code	Case Size	Impedance	Ripple Current	Case Size	Impedance	Ripple Current	Case Size	Impedance	Ripple Current
10	106							4 x 5	5.000	50
15	156							4 x 7	3.300	70
								5 x 5	2.600	80
22	226	4 x 5	5.000	50	4 x 7	3.300	70	5 x 7	1.700	110
					5 x 5	2.600	80	5 x 5	2.600	80
33	336	5 x 5	2.600	80	5 x 5	2.600	80	6.3 x 5	1.300	115
		5 x 7	1.700	110	5 x 7	1.700	110	6.3 x 7	0.800	160
47	476	5 x 5	2.600	80	6.3 x 5	1.300	115	6.3 x 5	1.300	115
		5 x 7	1.700	110	6.3 x 7	0.800	160	6.3 x 7	0.800	160
68	686	6.3 x 5	1.300	115	6.3 x 7	0.800	160	8 x 7	0.500	200
		6.3 x 7	0.800	160						
100	107	6.3 x 5	1.300	115	8 x 7	0.500	200	6.3 x 11	0.220	340
		6.3 x 7	0.800	160				8 x 7	0.500	200
120	127							6.3 x 11	0.220	340
150	157	8 x 7	0.500	200	6.3 x 11	0.220	340	6.3 x 11	0.220	340
					8 x 7	0.500	200	8 x 12	0.130	640
180	187	6.3 x 11	0.220	340	6.3 x 11	0.220	340	6.3 x 11	0.220	340
								8 x 12	0.130	640
220	227	8 x 7	0.500	200	6.3 x 11	0.220	340	6.3 x 11	0.220	340
		6.3 x 11	0.220	340				8 x 12	0.130	640
270	277	6.3 x 11	0.220	340	6.3 x 11	0.220	340	8 x 12	0.130	640
					8 x 12	0.130	640			
330	337	6.3 x 11	0.220	340	6.3 x 11	0.220	340	6.3 x 11	0.220	340
		8 x 12	0.130	640	8 x 12	0.130	640	8 x 12	0.130	640
390	397	8 x 12	0.130	640	8 x 12	0.130	640	8 x 12	0.130	640
470	477	8 x 12	0.130	640	6.3 x 11	0.220	340	8 x 12	0.130	640
					8 x 12	0.130	640	10 x 12.5	0.080	865
560	567	8 x 12	0.130	640	8 x 12	0.130	640	10 x 12.5	0.080	865
680	687	8 x 12	0.130	640	8 x 12	0.130	640	8 x 16	0.087	840
								10 x 12.5	0.080	865
820	827	8 x 12	0.130	640	10 x 12.5	0.080	865	10 x 16	0.060	1210
		10 x 12.5	0.080	865						
1000	108	8 x 12	0.130	640	8 x 16	0.087	840	8 x 16	0.087	840
		10 x 12.5	0.080	865	10 x 16	0.060	1210	10 x 16	0.060	1210
1200	128	8 x 16	0.087	840	10 x 20	0.046	1400	10 x 20	0.046	1400
		10 x 12.5	0.080	865						
1500	158	8 x 20	0.069	1050	10 x 20	0.046	1400	10 x 20	0.046	1400
		10 x 16	0.060	1210						
1800	188	10 x 20	0.046	1400	10 x 20	0.046	1400	10 x 25	0.042	1650
								12.5 x 20	0.035	1900
2200	228	10 x 20	0.046	1400	10 x 20	0.046	1400	10 x 25	0.042	1650
								12.5 x 20	0.035	1900
2700	278	10 x 25	0.042	1650	10 x 25	0.042	1650	12.5 x 25	0.030	2124
		12.5 x 20	0.035	1900	12.5 x 20	0.035	1900			
3300	338	10 x 25	0.042	1650	12.5 x 25	0.030	2124	12.5 x 25	0.030	2124
		12.5 x 20	0.035	1900						
3900	398	12.5 x 20	0.035	1900						
4700	478	12.5 x 25	0.030	2124						

Maximum Allowable Ripple Current (mArms) at 105˚C 100kHz
Maximum Impedance (Ω) at 20˚C 100kHz

Case Size ΦD x L (mm)

Specifications are subject to change without notice. Should a safety or technical concern arise regarding the product, please be sure to contact our sales offices or agents immediately.

STANDARD RATINGS

Voltage (Code)		25V (1E)			35V (1V)			50V (1H)		
Cap. (μF)	Code	Case Size	Impedance	Ripple Current	Case Size	Impedance	Ripple Current	Case Size	Impedance	Ripple Current
3.3	335				4 x 5	5.000	50			
4.7	475	4 x 5	5.000	50	4 x 5	5.000	50			
6.8	685	4 x 5	5.000	50	4 x 7	3.300	70			
					5 x 5	2.600	80			
10	106	4 x 7	3.300	70	5 x 5	2.600	80			
		5 x 5	2.600	80	5 x 7	1.700	110			
15	156	5 x 7	1.700	110	6.3 x 5	1.300	115			
		6.3 x 5	1.300	115	6.3 x 7	0.800	160			
22	226	5 x 7	1.700	110	6.3 x 5	1.300	115			
		6.3 x 5	1.300	115	6.3 x 7	0.800	160			
33	336	6.3 x 5	1.300	115	8 x 7	0.500	200	6.3 x 11	0.300	295
		6.3 x 7	0.800	160						
39	396							6.3 x 11	0.300	295
47	476	8 x 7	0.500	200	6.3 x 11	0.220	340	6.3 x 11	0.300	295
56	566				6.3 x 11	0.220	340	8 x 12	0.170	555
68	686	8 x 7	0.500	200	6.3 x 11	0.220	340	8 x 12	0.170	555
82	826	6.3 x 11	0.220	340	8 x 12	0.130	640	8 x 12	0.170	555
100	107	6.3 x 11	0.220	340	6.3 x 11	0.220	340	10 x 12.5	0.120	760
					8 x 12	0.130	640			
120	127	8 x 12	0.130	640	8 x 12	0.130	640	8 x 16	0.120	730
								10 x 12.5	0.120	760
150	157	8 x 12	0.130	640	8 x 12	0.130	640	10 x 16	0.084	1050
180	187	8 x 12	0.130	640	10 x 12.5	0.080	865	8 x 20	0.091	910
								10 x 16	0.084	1050
220	227	8 x 12	0.130	640	8 x 12	0.130	640	8 x 20	0.091	910
					8 x 16	0.087	840			
					10 x 12.5	0.080	865	10 x 16	0.084	1050
270	277	8 x 12	0.130	640	10 x 16	0.060	1210	10 x 25	0.055	1440
		10 x 12.5	0.080	865						
330	337	8 x 12	0.130	640	8 x 16	0.087	840	12.5 x 20	0.045	1660
					8 x 20	0.069	1050			
		10 x 12.5	0.080	865	10 x 12.5	0.080	865			
					10 x 16	0.060	1210			
390	397	10 x 12.5	0.080	865	10 x 16	0.060	1210	12.5 x 20	0.045	1660
470	477	8 x 16	0.087	840	10 x 16	0.060	1210	12.5 x 25	0.034	1950
		10 x 12.5	0.080	865						
		10 x 16	0.060	1210	10 x 20	0.046	1400			
560	567	10 x 16	0.060	1210	10 x 20	0.046	1400	12.5 x 25	0.034	1950
680	687	10 x 16	0.060	1210	10 x 20	0.046	1400			
		10 x 20	0.046	1400	12.5 x 20	0.035	1900			
820	827	10 x 20	0.046	1400	10 x 25	0.042	1650			
					12.5 x 20	0.035	1900			
1000	108	10 x 20	0.046	1400	12.5 x 20	0.035	1900			
					12.5 x 25	0.030	2124			
1200	128	10 x 20	0.046	1400						
1500	158	10 x 25	0.042	1650						
		12.5 x 20	0.035	1900						
1800	188	12.5 x 25	0.030	2124						
2200	228	12.5 x 25	0.030	2124						

Maximum Allowable Ripple Current (mArms) at 105˚C 100kHz
Maximum Impedance (Ω) at 20˚C 100kHz

Case Size ΦD x L (mm)

Specifications are subject to change without notice. Should a safety or technical concern arise regarding the product, please be sure to contact our sales offices or agents immediately.

STANDARD RATINGS

Voltage (Code)		63V (1J)			100V (2A)		
Cap. (μF)	Code	Case Size	Impedance	Ripple Current	Case Size	Impedance	Ripple Current
15	156				6.3 x 11	0.960	115
22	226	6.3 x 11	0.960	115			
27	276	6.3 x 11	0.960	115	8 x 12	0.504	232
33	336	6.3 x 11	0.960	115			
39	396	8 x 12	0.504	232	8 x 16	0.360	300
47	476	8 x 12	0.504	232	10 x 12.5	0.344	314
56	566	8 x 12	0.504	232	8 x 20	0.264	362
68	686	8 x 12	0.504	232	10 x 16	0.248	357
82	826	10 x 12.5	0.344	314	10 x 20	0.168	466
100	107	8 x 16	0.360	300	10 x 20	0.168	466
		10 x 12.5	0.344	314	12.5 x 20	0.128	690
120	127	8 x 16	0.360	300	12.5 x 20	0.128	690
		10 x 16	0.248	357			
150	157	8 x 20	0.264	362			
180	187	10 x 20	0.168	466	12.5 x 25	0.096	922
220	227	10 x 16	0.248	357	12.5 x 25	0.096	922
		10 x 20	0.168	466			
270	277	12.5 x 20	0.128	690			
330	337	12.5 x 20	0.128	690			
390	397	12.5 x 25	0.096	922			

Maximum Allowable Ripple Current (mArms) at 105˚C 100kHz
Maximum Impedance (Ω) at 20˚C 100kHz

Case Size ΦD x L (mm)

RIPPLE CURRENT MULTIPLIER

Frequency Coefficient

Coefficient / Freq. (Hz) / Cap (μF)	120	1k	10k	100k
≤180	0.40	0.75	0.90	1.00
220~560	0.50	0.85	0.94	1.00
680~1800	0.60	0.87	0.95	1.00
2200~3900	0.75	0.90	0.95	1.00
4700	0.85	0.95	0.98	1.00

Specifications are subject to change without notice. Should a safety or technical concern arise regarding the product, please be sure to contact our sales offices or agents immediately.

+105˚C, High Ripple Current (高紋波), Long Life Assurance (長壽命), Low Impedance (低阻抗品)

FEATURES

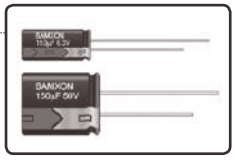

- Low impedance for high frequency.
- Long life: 3,000~6,000 hours at 105˚C.

SPECIFICATIONS

Item	Performance Characteristics
Operating Temperature Range	-40 to +105˚C
Rated Working Voltage Range	6.3 to 100V
Nominal Capacitance Range	15 to 3900μF
Capacitance Tolerance	±20% at 120Hz, +20˚C
Leakage Current	I ≤0.01CV or 3 (μA) whichever is greater measured after 2 minutes application of rated working voltage at +20˚C
tan δ (120Hz, +20˚C)	Working Voltage (V): 6.3, 10, 16, 25, 35, 50, 63, 100 tan δ (max.): 0.22, 0.19, 0.16, 0.14, 0.12, 0.10, 0.09, 0.08 For capacitance value >1000μF, add 0.02 per another 1000μF
Low Temperature Characteristics	Impedance ratio max. at 120Hz Working Voltage (V): 6.3, 10, 16, 25, 35, 50, 63, 100 Z-25˚C / Z+20˚C: 4, 3, 2, 2, 2, 2, 2, 2 Z-40˚C / Z+20˚C: 8, 6, 4, 3, 3, 3, 3, 3
High Temperature Loading	Test time : ΦD 5~6.3, 8, 10, 12.5 Load life 3,000h, 4,000h, 5,000h, 6,000h Test temperature : +105˚C Test conditions : Rated DC working voltage with rated ripple current Post test requirements at +20˚C Leakage current : ≤Initial specified value Cap. change : within ±25% of the initial measured value tan δ : ≤200% of the initial specified value
Shelf Life	At +105˚C no voltage applied after 1,000 hours and then being stabilized at +20˚C the capacitors shall meet the following limits Leakage current : ≤Initial specified value Cap. change : within ±25% of the initial measured value tan δ : ≤200% of the initial specified value
Industrial Standard	JIS C - 5101-4 (IEC 60384-4)

CASE SIZE TABLE

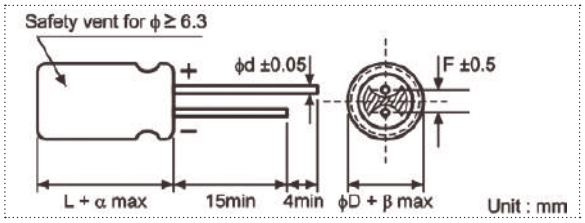

ΦD	6.3	8 (L <20)	8 (L ≥20)	10	12.5
F	2.5	3.5	3.5	5.0	5.0
Φd	0.5	0.5	0.6	0.6	0.6
α	(L <20) 1.5		(L ≥20) 2.0		
β	(D <20) 0.5		(D ≥20) 1.0		

RIPPLE CURRENT MULTIPLIER

Frequency Coefficient

Coefficient / Freq. (Hz) / Cap (μF)	50	120	300	1k	100k
15~33	0.45	0.55	0.70	0.90	1.00
39~330	0.60	0.70	0.85	0.95	1.00
470~1000	0.65	0.75	0.90	0.98	1.00
1200~3900	0.75	0.80	0.95	1.00	1.00

PART NUMBER SYSTEM (EXAMPLE : 10V 1500μF)

1	2 3	4 5 6	7	8 9	10	11 12	13 14
E	SF	158	M	1A	G	20	RR

- RR — Type (Radial Bulk)
- 20 — Case Length (20mm)
- G — Diameter (10mm)
- 1A — Voltage (10V)
- M — Tolerance (±20%)
- 158 — Capacitance (1500μF)
- SF — Series
- E — E-CAP

SAMXON®
Aluminum Electrolytic Capacitors

+105˚C, High Ripple Current (高紋波), Long Life Assurance (長壽命), Low Impedance (低阻抗品)

STANDARD RATINGS

Voltage (Code)		6.3V (0J)			10V (1A)			16V (1C)		
Cap. (μF)	Code	Case Size	Impedance	Ripple Current	Case Size	Impedance	Ripple Current	Case Size	Impedance	Ripple Current
120	127							6.3 x 11	0.220	340
220	227				6.3 x 11	0.220	340			
330	337	6.3 x 11	0.220	340				8 x 12	0.130	640
470	477				8 x 12	0.130	640	8 x 12	0.130	640
								8 x 16	0.087	840
								10 x 12.5	0.080	865
680	687	8 x 12	0.130	640	8 x 16	0.087	840	8 x 20	0.069	1050
					10 x 12.5	0.080	865	10 x 12.5	0.080	865
								10 x 16	0.060	1210
820	827	10 x 12.5	0.080	865						
1000	108	8 x 16	0.087	840	8 x 20	0.069	1050	10 x 16	0.060	1210
					10 x 16	0.060	1210	10 x 20	0.046	1400
1200	128	8 x 20	0.069	1050	10 x 20	0.046	1400	10 x 25	0.042	1650
		10 x 16	0.060	1210						
1500	158	10 x 20	0.046	1400	10 x 25	0.042	1650	12.5 x 20	0.035	1900
2200	228	10 x 25	0.042	1650	12.5 x 20	0.035	1900	12.5 x 20	0.035	1900
								12.5 x 25	0.030	2124
3300	338	12.5 x 20	0.035	1900	12.5 x 25	0.030	2124			
3900	398	12.5 x 25	0.030	2124						

Maximum Allowable Ripple Current (mArms) at 105˚C 100kHz
Maximum Impedance (Ω) at 20˚C 100kHz
Case Size ΦD x L (mm)

Voltage (Code)		25V (1E)			35V (1V)			50V (1H)		
Cap. (μF)	Code	Case Size	Impedance	Ripple Current	Case Size	Impedance	Ripple Current	Case Size	Impedance	Ripple Current
56	566				6.3 x 11	0.220	340	6.3 x 11	0.300	295
100	107	6.3 x 11	0.220	340				8 x 12	0.170	555
120	127							8 x 16	0.120	730
150	157				8 x 12	0.130	640	10 x 12.5	0.120	760
220	227	6.3 x 11	0.220	340	8 x 16	0.087	840	10 x 16	0.084	1050
		8 x 12	0.130	640	10 x 12.5	0.080	865			
330	337	8 x 16	0.087	840	10 x 12.5	0.080	865	10 x 25	0.055	1440
		10 x 12.5	0.080	865	10 x 16	0.060	1210			
470	477	8 x 20	0.069	1050	10 x 20	0.046	1400	10 x 20	0.060	1210
		10 x 16	0.060	1210				12.5 x 20	0.045	1660
560	567				10 x 25	0.042	1650	12.5 x 25	0.034	1950
680	687	10 x 16	0.060	1210	12.5 x 20	0.035	1900	10 x 30	0.043	1690
		10 x 20	0.046	1400						
820	827	10 x 25	0.042	1650						
1000	108	12.5 x 20	0.035	1900	12.5 x 20	0.035	1900			
					12.5 x 25	0.030	2124			
1500	158	12.5 x 25	0.030	2124						

Maximum Allowable Ripple Current (mArms) at 105˚C 100kHz
Maximum Impedance (Ω) at 20˚C 100kHz
Case Size ΦD x L (mm)

Voltage (Code)		63V (1J)			100V (2A)		
Cap. (μF)	Code	Case Size	Impedance	Ripple Current	Case Size	Impedance	Ripple Current
15	156				6.3 x 11	0.960	115
27	276				8 x 12	0.504	232
33	336	6.3 x 11	0.960	115			
39	396				8 x 16	0.360	300
47	476				10 x 12.5	0.344	314
56	566	8 x 12	0.504	232	8 x 20	0.264	362
68	686				10 x 16	0.248	357
82	826	8 x 16	0.360	300	10 x 20	0.168	466
		10 x 12.5	0.344	314			
100	107				10 x 20	0.168	466
					10 x 25	0.160	531
120	127	8 x 20	0.264	362	12.5 x 20	0.128	690
		10 x 16	0.248	357			
180	187	10 x 20	0.168	466	12.5 x 25	0.096	922
220	227	10 x 25	0.160	531			
270	277	12.5 x 20	0.128	690			
330	337	12.5 x 25	0.096	922			

Maximum Allowable Ripple Current (mArms) at 105˚C 100kHz
Maximum Impedance (Ω) at 20˚C 100kHz
Case Size ΦD x L (mm)

Specifications are subject to change without notice. Should a safety or technical concern arise regarding the product, please be sure to contact our sales offices or agents immediately.

+105˚C, High Ripple Current (高紋波), Longer Life Assurance (較長壽命), Low Impedance (低阻抗品)

FEATURES

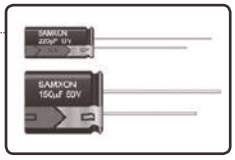

- Low impedance for high frequency.
- Load life of 4,000~10,000 hours at 105˚C.

SPECIFICATIONS

Item	Performance Characteristics
Operating Temperature Range	-40 to +105˚C
Rated Working Voltage Range	6.3 to 100V
Nominal Capacitance Range	15 to 4700μF
Capacitance Tolerance	±20% at 120Hz, +20˚C
Leakage Current	I ≤0.01CV or 3 (μA) whichever is greater measured after 2 minutes application of rated working voltage at +20˚C
tan δ (120Hz, +20˚C)	Working Voltage (V): 6.3, 10, 16, 25, 35, 50, 63, 100 tan δ (max.): 0.22, 0.19, 0.16, 0.14, 0.12, 0.10, 0.09, 0.08 For capacitance value >1000μF, add 0.02 per another 1000μF
Low Temperature Characteristics	Impedance ratio max. at 120Hz Rated Voltage (V): 6.3, 10, 16, 25, 35, 50, 63, 100 Z-25˚C / Z+20˚C: 4, 3, 2, 2, 2, 2, 2, 2 Z-40˚C / Z+20˚C: 8, 6, 4, 3, 3, 3, 3, 3
High Temperature Loading	Test time: Φ D / 5~6.3 / 8~10 / ≥12.5 6.3~10WV / 4,000h / 6,000h / 8,000h 16~100WV / 5,000h / 7,000h / 10,000h Test temperature: +105˚C Test conditions: Rated DC working voltage with rated ripple current Post test requirements at +20˚C Leakage current: ≤Initial specified value Cap. change: within ±25% of the initial measured value tan δ: ≤200% of the initial specified value
Shelf Life	At +105˚C no voltage applied after 1,000 hours and then being stabilized at +20˚C the capacitors shall meet the following limits Leakage current: ≤Initial specified value Cap. change: within ±25˚% of the initial measured value tan δ: ≤200% of the initial specified value
Industrial Standard	JIS C - 5101-4 (IEC 60384-4)

CASE SIZE TABLE

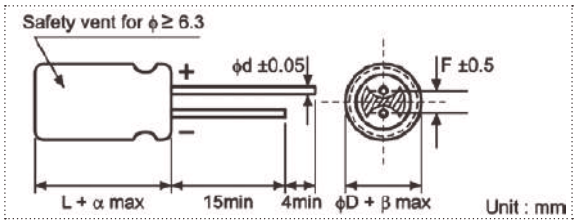

ΦD	6.3	8 (L <20)	8 (L ≥20)	10	12.5	16
F	2.5	3.5	3.5	5.0	5.0	7.5
Φd	0.5	0.5	0.6	0.6	0.6	0.8
α	(L <20) 1.5			(L ≥20) 2.0		
β	(D <20) 0.5			(D ≥20) 1.0		

RIPPLE CURRENT MULTIPLIER

Frequency Coefficient

Coefficient / Freq. (Hz) / Cap (μF)	50	120	300	1k	100k
15~33	0.45	0.55	0.70	0.90	1.00
39~330	0.60	0.70	0.85	0.95	1.00
390~1000	0.65	0.75	0.90	0.98	1.00
1200~4700	0.75	0.80	0.95	1.00	1.00

PART NUMBER SYSTEM (EXAMPLE : 10V 3300μF)

1	2 3	4 5 6	7	8 9	10	11 12	13 14
E	GT	338	M	1A	I	25	RR

- Type (Radial Bulk)
- Case Length (25mm)
- Diameter (12.5mm)
- Voltage (10V)
- Tolerance (±20%)
- Capacitance (3300μF)
- Series
- E-CAP

STANDARD RATINGS

Voltage (Code)		6.3V (0J)			10V (1A)			16V (1C)		
Cap. (μF)	Code	Case Size	Impedance	Ripple Current	Case Size	Impedance	Ripple Current	Case Size	Impedance	Ripple Current
120	127							6.3 x 11	0.220	340
220	227				6.3 x 11	0.220	340	6.3 x 11	0.220	340
330	337	6.3 x 11	0.220	340				8 x 12	0.130	640
470	477				6.3 x 11	0.220	340	8 x 12	0.130	640
								8 x 16	0.087	840
					8 x 12	0.130	640	10 x 12.5	0.080	865
680	687	8 x 12	0.130	640	8 x 16	0.087	840	8 x 16	0.087	840
								8 x 20	0.069	1050
					10 x 12.5	0.080	865	10 x 16	0.060	1210
820	827	10 x 12.5	0.080	865						
1000	108	8 x 16	0.087	840	8 x 20	0.069	1050	8 x 20	0.069	1050
		10 x 12.5	0.080	865	10 x 16	0.060	1210	10 x 16	0.060	1210
								10 x 20	0.046	1400
1200	128	8 x 20	0.069	1050	10 x 20	0.046	1400	10 x 20	0.046	1400
		10 x 16	0.060	1210				10 x 25	0.042	1650
1500	158	10 x 20	0.046	1400	10 x 25	0.042	1650	10 x 20	0.046	1400
								10 x 30	0.031	1910
								12.5 x 20	0.035	1900
2200	228	10 x 25	0.042	1650	10 x 30	0.031	1910	12.5 x 25	0.030	2124
					12.5 x 20	0.035	1900			
2700	278	10 x 30	0.031	1910						
3300	338	12.5 x 20	0.035	1900	12.5 x 25	0.030	2124	12.5 x 25	0.030	2124
								16 x 20	0.035	2210
3900	398	12.5 x 25	0.030	2124						
4700	478							16 x 25	0.028	2552

Maximum Allowable Ripple Current (mArms) at 105˚C 100kHz
Maximum Impedance (Ω) at 20˚C 100kHz

Case Size ΦD x L (mm)

Specifications are subject to change without notice. Should a safety or technical concern arise regarding the product, please be sure to contact our sales offices or agents immediately.

STANDARD RATINGS

Voltage (Code)		25V (1E)			35V (1V)			50V (1H)		
Cap. (μF)	Code	Case Size	Impedance	Ripple Current	Case Size	Impedance	Ripple Current	Case Size	Impedance	Ripple Current
47	476							6.3 x 11	0.300	295
56	566				6.3 x 11	0.220	340	6.3 x 11	0.300	295
100	107	6.3 x 11	0.220	340	6.3 x 11	0.220	340	8 x 12	0.170	555
120	127							8 x 16	0.120	730
150	157				8 x 12	0.130	640	10 x 12.5	0.120	760
180	187							8 x 12	0.170	555
220	227	6.3 x 11	0.220	340	8 x 12	0.130	640	8 x 16	0.120	730
		8 x 12	0.130	640	8 x 16	0.087	840	10 x 12.5	0.120	760
					10 x 12.5	0.080	865	10 x 16	0.084	1050
270	277							10 x 20	0.060	1220
330	337	8 x 16	0.087	840	10 x 12.5	0.080	865	10 x 16	0.084	1050
		10 x 12.5	0.080	865	10 x 16	0.060	1210	10 x 25	0.055	1440
470	477	8 x 12	0.130	640	8 x 20	0.069	1050	10 x 16	0.084	1050
		8 x 16	0.087	840	10 x 16	0.060	1210	10 x 20	0.060	1220
		8 x 20	0.069	1050				10 x 30	0.043	1690
		10 x 16	0.060	1210	10 x 20	0.046	1400	12.5 x 20	0.045	1660
560	567				10 x 25	0.042	1650	10 x 20	0.060	1220
								12.5 x 25	0.034	1950
680	687	8 x 20	0.069	1050	10 x 20	0.046	1400	12.5 x 20	0.045	1660
		10 x 16	0.060	1210	10 x 30	0.031	1910			
		10 x 20	0.046	1400	12.5 x 20	0.035	1900			
820	827	10 x 20	0.046	1400	10 x 25	0.042	1650	12.5 x 20	0.045	1660
		10 x 25	0.042	1650				12.5 x 25	0.034	1950
1000	108	10 x 16	0.060	1210	12.5 x 20	0.035	1900	12.5 x 25	0.034	1950
		10 x 20	0.046	1400						
		10 x 25	0.042	1650	12.5 x 25	0.030	2124			
		10 x 30	0.031	1910						
		12.5 x 20	0.035	1900						
1500	158	12.5 x 20	0.035	1900	12.5 x 25	0.030	2124			
		12.5 x 25	0.030	2124						
2200	228	12.5 x 25	0.030	2124	12.5 x 30	0.026	2524			

Maximum Allowable Ripple Current (mArms) at 105˚C 100kHz
Maximum Impedance (Ω) at 20˚C 100kHz

Case Size ΦD x L (mm)

Specifications are subject to change without notice. Should a safety or technical concern arise regarding the product, please be sure to contact our sales offices or agents immediately.

STANDARD RATINGS

Voltage (Code)		63V (1J)			100V (2A)		
Cap. (μF)	Code	Case Size	Impedance	Ripple Current	Case Size	Impedance	Ripple Current
15	156				6.3 x 11	0.960	115
22	226				6.3 x 11	0.960	115
27	276				8 x 12	0.504	232
33	336	6.3 x 11	0.960	115	8 x 12	0.504	232
39	396				8 x 16	0.360	300
47	476	6.3 x 11	0.960	115	10 x 12.5	0.344	314
56	566	8 x 12	0.504	232	8 x 20	0.264	362
68	686	8 x 12	0.504	232	10 x 16	0.248	357
82	826	8 x 16	0.360	300	10 x 20	0.168	466
		10 x 12.5	0.344	314			
100	107	10 x 12.5	0.344	314	10 x 16	0.248	357
					10 x 20	0.168	466
					10 x 25	0.160	531
120	127	8 x 20	0.264	362	10 x 30	0.120	663
		10 x 16	0.248	357	12.5 x 20	0.128	690
150	157				10 x 20	0.168	466
180	187	10 x 20	0.168	466	12.5 x 25	0.096	922
220	227	10 x 16	0.248	357	12.5 x 25	0.096	922
		10 x 25	0.160	531			
270	277	10 x 20	0.168	466			
		10 x 30	0.120	663			
		12.5 x 20	0.128	690			
330	337	10 x 20	0.168	466	12.5 x 30	0.080	905
		12.5 x 20	0.128	690			
		12.5 x 25	0.096	922			
390	397	12.5 x 20	0.128	690			
470	477	12.5 x 20	0.128	690	16 x 25	0.058	1250
		12.5 x 25	0.096	922			
680	687	12.5 x 25	0.096	922			
820	827	12.5 x 40	0.057	1300			
		16 x 25	0.058	1250			
1000	108	16 x 25	0.058	1250			
1200	128	16 x 25	0.058	1250			

Maximum Allowable Ripple Current (mArms) at 105˚C 100kHz
Maximum Impedance (Ω) at 20˚C 100kHz

Case Size ΦD x L (mm)

Specifications are subject to change without notice. Should a safety or technical concern arise regarding the product, please be sure to contact our sales offices or agents immediately.

FEATURES

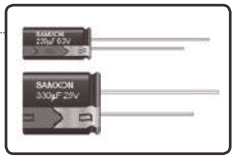

- Load life of 2,000~5,000 hours at 105˚C.
- Enabled high ripple current by a reduction of impedance at high frequency range.
- Lowest impedance for personal computer and storage equipment.

SPECIFICATIONS

Item	Performance Characteristics
Operating Temperature Range	-40 to +105˚C
Rated Working Voltage Range	6.3 to 25V
Nominal Capacitance Range	100 to 3900μF
Capacitance Tolerance	±20% at 120Hz, +20˚C
Leakage Current	I ≤0.01CV or 3 (μA) whichever is greater measured after 2 minutes application of rated working voltage at +20˚C
tan δ (120Hz, +20˚C)	Working Voltage (V): 6.3 / 10 / 16 / 25 tan δ (max.): 0.22 / 0.19 / 0.16 / 0.14 For capacitance value >1000μF, add 0.02 per another 1000μF
Low Temperature Characteristics	Impedance ratio max. at 120Hz Working Voltage (V): 6.3 / 10 / 16 / 25 Z-25˚C / Z+20˚C: 2 / 2 / 2 / 2
High Temperature Loading	Test time : ΦD: 6.3 / 8 / 10 / 12.5; Load life: 2,000h / 3,000h / 4,000h / 5,000h Test temperature : +105˚C Test conditions : Rated DC working voltage with rated ripple current Post test requirements at +20˚C Leakage current : ≤Initial specified value Cap. change : within ±25˚% of the initial measured value tan δ : ≤200% of the initial specified value
Shelf Life	At +105˚C no voltage applied after 1,000 hours and then being stabilized at +20˚C the capacitors shall meet the following limits Leakage current : ≤Initial specified value Cap. change : within ±25˚% of the initial measured value tan δ : ≤200% of the initial specified value
Industrial Standard	JIS C - 5101-4 (IEC 60384-4)

CASE SIZE TABLE

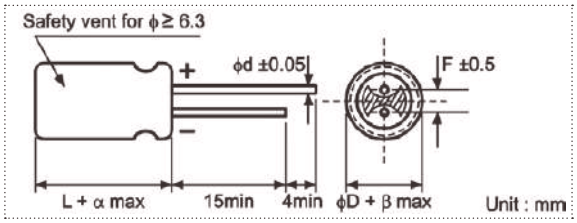

ΦD	6.3	8 (L <20)	8 (L ≥20)	10	12.5
F	2.5	3.5	3.5	5.0	5.0
Φd	0.5	0.5	0.6	0.6	0.6
α	(L <20) 1.5		(L ≥20) 2.0		
β	(D <20) 0.5		(D ≥20) 1.0		

RIPPLE CURRENT MULTIPLIER

Frequency Coefficient

Coefficient / Freq. (Hz) / Cap (μF)	120	1k	10k	100k
100~180	0.40	0.75	0.90	1.00
220~560	0.50	0.85	0.94	1.00
680~1800	0.60	0.87	0.95	1.00
2200~3900	0.75	0.90	0.95	1.00

PART NUMBER SYSTEM (EXAMPLE : 25V 220μF)

1	2 3	4 5 6	7	8 9	10	11 12	13 14
E	GK	227	M	1E	F	12	RR

- Type (Radial Bulk)
- Case Length (12mm)
- Diameter (8mm)
- Voltage (25V)
- Tolerance (±20%)
- Capacitance (220μF)
- Series
- E-CAP

SAMXON®
Aluminum Electrolytic Capacitors

+105˚C, Higher Ripple Current (較高紋波), Lower Impedance (較低阻抗品)

STANDARD RATINGS

Voltage (Code)		6.3V (0J)			10V (1A)			16V (1C)		
Cap. (μF)	Code	Case Size	Impedance	Ripple Current	Case Size	Impedance	Ripple Current	Case Size	Impedance	Ripple Current
120	127							6.3 x 11	0.130	405
220	227	6.3 x 11	0.130	405	6.3 x 11	0.130	405	8 x 12	0.072	760
330	337	6.3 x 11	0.130	405	8 x 12	0.072	760	8 x 12	0.072	760
470	477	8 x 12	0.072	760	8 x 12	0.072	760	8 x 16	0.056	995
								10 x 12.5	0.053	1030
560	567	8 x 12	0.072	760						
680	687				8 x 16	0.056	995	8 x 20	0.041	1250
					10 x 12.5	0.053	1030	10 x 16	0.038	1430
820	827	8 x 16	0.056	995						
1000	108	10 x 12.5	0.053	1030	8 x 20	0.041	1250	10 x 20	0.023	1820
					10 x 16	0.038	1430			
1200	128	8 x 20	0.041	1250	10 x 20	0.023	1820	10 x 25	0.022	2150
		10 x 16	0.038	1430						
1500	158	10 x 20	0.023	1820	10 x 25	0.022	2150	12.5 X 20	0.021	2360
2200	228	10 x 25	0.022	2150	12.5 x 20	0.021	2360	12.5 X 25	0.018	2770
3300	338	12.5 x 20	0.021	2360	12.5 x 25	0.018	2770			
3900	398	12.5 x 25	0.018	2770						

Maximum Allowable Ripple Current (mArms) at 105˚C 100kHz
Maximum Impedance (Ω) at 20˚C 100kHz
Case Size ΦD x L (mm)

Voltage (Code)		25V (1E)		
Cap. (μF)	Code	Case Size	Impedance	Ripple Current
100	107	6.3 x 11	0.130	405
220	227	8 x 12	0.072	760
330	337	8 x 16	0.056	995
		10 x 12.5	0.053	1030
470	477	8 x 20	0.041	1250
		10 x 16	0.038	1430
680	687	10 x 20	0.023	1820
820	827	10 x 25	0.022	2150
1000	108	12.5 x 20	0.021	2360
1500	158	12.5 x 25	0.018	2770

Maximum Allowable Ripple Current (mArms) at 105˚C 100kHz
Maximum Impedance (Ω) at 20˚C 100kHz
Case Size ΦD x L (mm)

Specifications are subject to change without notice. Should a safety or technical concern arise regarding the product, please be sure to contact our sales offices or agents immediately.

+105˚C, Highest Ripple Current (更高紋波), Lowest Impedance (更低阻抗品), Long Life (長壽命)

FEATURES

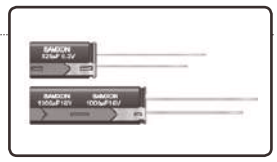

- Load life of 5,000~6,000 hours at 105˚C.
- Enabled high ripple current by a reduction of impedance at high frequency range.
- Lowest impedance for personal computer and storage equipment.

SPECIFICATIONS

Item	Performance Characteristics
Operating Temperature Range	-40 to +105˚C
Rated Working Voltage Range	6.3 to 50V
Nominal Capacitance Range	100 to 8200μF
Capacitance Tolerance	±20% at 120Hz, +20˚C
Leakage Current	I ≤0.01CV or 3 (μA) whichever is greater measured after 2 minutes application of rated working voltage at +20˚C
tan δ (120Hz, +20˚C)	Working Voltage (V): 6.3, 10, 16, 25, 35, 50 tan δ (max.): 0.22, 0.19, 0.16, 0.14, 0.12, 0.10 For capacitance value >1000μF, add 0.02 per another 1000μF
Low Temperature Characteristics	Impedance ratio max. at 120Hz Working Voltage (V): 6.3, 10, 16, 25, 35, 50 Z-25˚C / Z+20˚C: 2, 2, 2, 2, 2, 2
High Temperature Loading	Test time : ΦD 6.3 8~16; Load life 5,000h 6,000h Test temperature : +105˚C Test conditions : Rated DC working voltage with rated ripple current Post test requirements at +20˚C Leakage current : ≤Initial specified value Cap. change : within ±25% of the initial measured value (6.3, 10V: within ±30%) tan δ : ≤200% of the initial specified value
Shelf Life	At +105˚C no voltage applied after 1,000 hours and then being stabilized at +20˚C the capacitors shall meet the following limits Leakage current : ≤Initial specified value Cap. change : within ±25% of the initial measured value (6.3, 10V: within ±30%) tan δ : ≤200% of the initial specified value
Industrial Standard	JIS C - 5101-4 (IEC 60384-4)

CASE SIZE TABLE

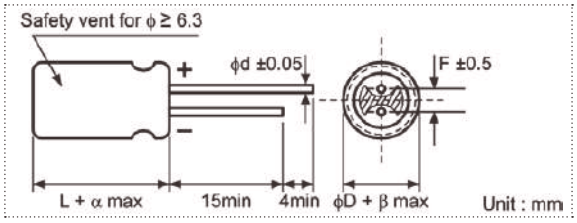

ΦD	6.3	8 (L <20)	8 (L ≥20)	10	12.5	16
F	2.5	3.5	3.5	5.0	5.0	7.5
Φd	0.5	0.5	0.6	0.6	0.6	0.8
α	(L <20) 1.5			(L ≥20) 2.0		
β	(D <20) 0.5			(D ≥20) 1.0		

RIPPLE CURRENT MULTIPLIER

Frequency Coefficient

Coefficient / Freq. (Hz) / Cap (μF)	120	1k	10k	100k
100~180	0.40	0.75	0.90	1.00
220~560	0.50	0.85	0.94	1.00
680~1800	0.60	0.87	0.95	1.00
2200~3900	0.75	0.90	0.95	1.00
4700~8200	0.85	0.95	0.98	1.00

PART NUMBER SYSTEM (EXAMPLE : 16V 1000μF)

1	2 3	4 5 6	7	8 9	10	11 12	13 14
E	SH	108	M	1C	G	16	RR

- 13 14: Type (Radial Bulk)
- 11 12: Case Length (16mm)
- 10: Diameter (10mm)
- 8 9: Voltage (16V)
- 7: Tolerance (±20%)
- 4 5 6: Capacitance (1000μF)
- 2 3: Series
- 1: E-CAP

STANDARD RATINGS

Voltage (Code)		6.3V (0J)			10V (1A)			16V (1C)		
Cap. (μF)	Code	Case Size	Impedance	Ripple Current	Case Size	Impedance	Ripple Current	Case Size	Impedance	Ripple Current
220	227							6.3 x 11	0.110	500
330	337				6.3 x 11	0.110	500			
470	477	6.3 x 11	0.110	500				8 x 12	0.062	900
680	687				8 x 12	0.062	900	8 x 16	0.048	1210
								10 x 12.5	0.045	1240
820	827	8 x 12	0.062	900						
1000	108				8 x 16	0.048	1210	8 x 20	0.033	1410
					10 x 12.5	0.045	1240	10 x 16	0.032	1650
1200	128	8 x 16	0.048	1210						
		10 x 12.5	0.045	1240						
1500	158	8 x 20	0.033	1410	8 x 20	0.033	1410	10 x 20	0.020	1960
					10 x 16	0.032	1650		0.028	2500*
						0.032	1760*			
1800	188	10 x 16	0.032	1650	10 x 20	0.020	1960	10 x 25	0.018	2250
2200	228	10 x 20	0.020	1960	10 x 25	0.018	2250	12.5 x 20	0.017	2480
2700	278	10 x 25	0.018	2250				12.5 x 25	0.015	2900
3300	338				12.5 x 20	0.017	2480	12.5 x 30	0.013	3450
								16 x 20	0.015	3250
3900	398	12.5 x 20	0.017	2480	12.5 x 25	0.015	2900	12.5 x 35	0.012	3570
4700	478	12.5 x 25	0.015	2900	12.5 x 30	0.013	3450	16 x 25	0.013	3630
					16 x 20	0.015	3250			
5600	568	12.5 x 30	0.013	3450	12.5 x 35	0.012	3570			
6800	688	12.5 x 35	0.012	3570	16 x 25	0.013	3630			
		16 x 20	0.015	3250						
8200	828	16 x 25	0.013	3630						

Maximum Allowable Ripple Current (mArms) at 105˚C 100kHz
Maximum Impedance (Ω) at 20˚C 100kHz
Case Size ΦD x L (mm)

Voltage (Code)		25V (1E)			35V (1V)			50V (1H)		
Cap. (μF)	Code	Case Size	Impedance	Ripple Current	Case Size	Impedance	Ripple Current	Case Size	Impedance	Ripple Current
100	107	6.3 x 11	0.110	500	6.3 x 11	0.110	500	8 x 12	0.074	724
150	157	6.3 x 11	0.110	500				10 x 12.5	0.061	979
220	227				8 x 12	0.062	900	10 x 16	0.042	1370
330	337	8 x 12	0.062	900	10 x 12.5	0.045	1240	10 x 20	0.028	1870
390	397	8 x 16	0.048	1210	8 x 20	0.033	1410			
470	477	10 x 12.5	0.045	1240	10 x 16	0.032	1650	12.5 x 20	0.027	2050
560	567	8 x 20	0.033	1410	10 x 20	0.020	1960	12.5 x 25	0.023	2410
680	687	10 x 16	0.032	1650	10 x 20	0.020	1960	12.5 x 30	0.021	2860
			0.032	1760*						
820	827	10 x 20	0.020	1960*						
1000	108	10 x 25	0.018	2250	12.5 x 20	0.017	2480	16 x 25	0.021	3010
1200	128				12.5 x 25	0.015	2900			
1500	158	12.5 x 20	0.017	2480						
1800	188	12.5 x 25	0.015	2900						
2200	228	12.5 x 30	0.013	3450	16 x 25	0.013	3630			
		16 x 20	0.015	3250						
2700	278	12.5 x 35	0.012	3570						
3300	338	16 x 25	0.013	3630						

Maximum Allowable Ripple Current (mArms) at 105˚C 100kHz
Maximum Impedance (Ω) at 20˚C 100kHz
Case Size ΦD x L (mm)

* Special item with higher ripple current & longer life of 10,000 hrs.
Specifications are subject to change without notice. Should a safety or technical concern arise regarding the product, please be sure to contact our sales offices or agents immediately.

+105˚C, Highest Ripple Current (更高紋波), Longest Life Assurance (更長壽命), Lower Impedance (較低阻抗)

FEATURES

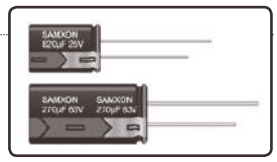

- Higher ripple current than GT series and Lower Impedance than GY series.
- Load life of 6,000~10,000 hours at 105˚C.
- Enabled high ripple current by a reduction of impedance at high frequency range.
- Lowest impedance for personal computer and storage equipment.

SPECIFICATIONS

Item	Performance Characteristics
Operating Temperature Range	-40 to +105˚C
Rated Working Voltage Range	6.3 to 100V
Nominal Capacitance Range	33 to 8200μF
Capacitance Tolerance	±20% at 120Hz, +20˚C
Leakage Current	I ≤0.01CV or 3(μA) whichever is greater measured after 2 minutes application of rated working voltage at +20˚C
tan δ (120Hz, +20˚C)	Working Voltage (V): 6.3, 10, 16, 25, 35, 50, 63, 80, 100 tan δ (max.): 0.22, 0.19, 0.16, 0.14, 0.12, 0.10, 0.09, 0.08, 0.08 For capacitance ＞1000μF, add 0.02 per another 1000μF
Low Temperature Characteristics	Impedance ratio max. at 120Hz Working Voltage (V): 6.3, 10, 16, 25, 35, 50, 63, 80, 100 Z-25˚C / Z+20˚C: 2, 2, 2, 2, 2, 2, 2, 2, 2
High Temperature Loading	Test time : ΦD / 6.3V / 10~50V / 63~100V ≤6.3 / 6,000h / 7,000h / 6,000h 8 x 12 / 8,000h / 9,000h / 8,000h 10 x 12.5 / 9,000h / 9,000h / 9,000h 8 x 16, 8 x 20 / 9,000h / 10,000h / 9,000h 10 x 16,10 x 20, 10 x 25, ≥12.5 / 10,000h Post test requirements at +20˚C Leakage current : ≤Initial specified value Cap. change : within ±25% of the initial measured value (6.3, 10V: within ±30%) tan δ : ≤200% of the initial specified value Test temperature : +105˚C Test conditions : Rated DC working voltage with rated ripple current
Shelf Life	At +105˚C no voltage applied after 1,000 hours and then being stabilized at +20˚C the capacitors shall meet the following limits Leakage current : ≤Initial specified value Cap. change : within ±25% of the initial measured value (6.3, 10V: within ±30%) tan δ : ≤200% of the initial specified value
Industrial Standard	JIS C - 5101-4 (IEC 60384-4)

CASE SIZE TABLE

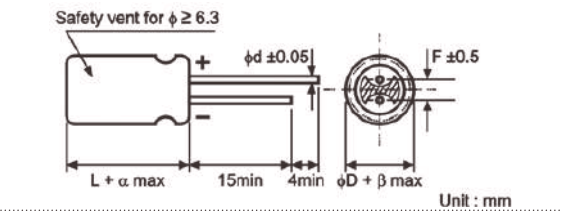

ΦD	5	6.3	8(L<20)	8(L≥20)	10	12.5	16	18
F	2.0	2.5	3.5	3.5	5.0	5.0	7.5	7.5
Φd	0.5	0.5	0.5	0.6	0.6	0.6	0.8	0.8
α	(L <20) 1.5				(L ≥20) 2.0			
β	(D <20) 0.5				(D ≥20) 1.0			

RIPPLE CURRENT MULTIPLIER

Frequency Coefficient

Coefficient / Freq. (Hz) / Cap (μF)	120	1K	10K	100K
33~270	0.50	0.73	0.92	1.00
330~680	0.55	0.77	0.94	1.00
820~1800	0.60	0.80	0.96	1.00
2200~8200	0.70	0.85	0.98	1.00

PART NUMBER SYSTEM (EXAMPLE : 16V 1000μF)

1	2 3	4 5 6	7	8 9	10	11 12	13 14
E	SK	108	M	1C	G	16	RR

- Type (Radial Bulk)
- Case Length (16mm)
- Diameter (10mm)
- Voltage (16V)
- Tolerance (±20%)
- Capacitance (1000μF)
- Series
- E-CAP

STANDARD RATINGS

Voltage (Code)		6.3V (0J)			10V (1A)			16V (1C)		
Cap. (μF)	Code	Case Size	Impedance	Ripple Current	Case Size	Impedance	Ripple Current	Case Size	Impedance	Ripple Current
270	277							6.3 x 12	0.170	700
330	337				6.3 x 12	0.170	700			
470	477	6.3 x 12	0.170	540				8 x 12	0.075	1200
560	567				8 x 12	0.075	1200	8 x 16	0.059	1600
680	687				8 x 16	0.059	1600	8 x 16	0.059	1600
								10 x 12.5	0.053	1700
820	827	8 x 12	0.075	945	10 x 12.5	0.053	1700	8 x 20	0.041	1960
1000	108	8 x 16	0.059	1250	8 x 16	0.059	1600	8 x 16	0.059	1600
					8 x 20	0.041	1960	10 x 16	0.038	2000
1200	128	10 x 12.5	0.053	1330	10 x 16	0.038	2000			
1500	158	8 x 20	0.041	1500				10 x 16	0.038	2000
								10 x 20	0.028	2500
1800	188	10 x 16	0.038	1760	10 x 20	0.028	2500	10 x 25	0.024	2900
2200	228				10 x 25	0.024	2900	10 x 20	0.028	2500
								12.5 x 20	0.025	2600
2700	278	10 x 20	0.028	1960	12.5 x 20	0.025	2600	12.5 x 25	0.019	3200
3300	338	10 x 25	0.024	2250	12.5 x 25	0.019	3200	12.5 x 25	0.019	3200
								16 x 20	0.021	3330
3900	398	12.5 x 20	0.025	2480				12.5 x 35	0.016	4120
4700	478	12.5 x 25	0.019	2900	12.5 x 30	0.018	3660	16 x 25	0.017	3810
					16 x 20	0.021	3330			
5600	568	12.5 x 30	0.018	3450	12.5 x 35	0.016	4120			
					16 x 25	0.017	3810			
6800	688	12.5 x 35	0.016	3570						
		16 x 20	0.021	3250						
8200	828	16 x 25	0.017	3630						

Maximum Allowable Ripple Current (mArms) at 105°C 100kHz
Maximum Impedance (Ω) at 20°C 100kHz

Case Size ΦD x L (mm)

Specifications are subject to change without notice. Should a safety or technical concern arise regarding the product, please be sure to contact our sales offices or agents immediately.

STANDARD RATINGS

Voltage (Code)		25V (1E)			35V (1V)			50V (1H)		
Cap. (μF)	Code	Case Size	Impedance	Ripple Current	Case Size	Impedance	Ripple Current	Case Size	Impedance	Ripple Current
56	566							6.3 x 12	0.220	500
100	107				6.3 x 12	0.170	700	8 x 12	0.120	950
120	127							8 x 16	0.082	1230
150	157	6.3 x 12	0.170	700				10 x 12.5	0.073	1280
180	187				8 x 12	0.075	1200	8 x 20	0.058	1580
220	227				8 x 16	0.059	1600	10 x 16	0.053	1650
270	277				10 x 12.5	0.053	1700			
330	337	8 x 12	0.075	1200	8 x 20	0.041	1960	10 x 16	0.053	1650
								10 x 20	0.038	2060
390	397	8 x 16	0.059	1600	10 x 16	0.038	2000	10 x 25	0.032	2420
470	477	8 x 12	0.075	1200	10 x 16	0.038	2000	10 x 20	0.038	2060
		10 x 12.5	0.053	1700				12.5 x 20	0.032	2300
560	567	8 x 20	0.041	1960	10 x 20	0.028	2500			
680	687	8 x 16	0.059	1600	10 x 20	0.028	2500	12.5 x 25	0.025	2800
		10 x 16	0.038	2000	10 x 25	0.024	2900			
820	827				12.5 x 20	0.025	2600	12.5 x 30	0.023	3370
								16 x 20	0.026	3070
1000	108	10 x 20	0.028	2500	12.5 x 20	0.025	2600	12.5 x 20	0.032	2300
								12.5 x 35	0.021	3810
1200	128	10 x 25	0.024	2900	12.5 x 25	0.019	3200			
1500	158	12.5 x 20	0.025	2600	12.5 x 30	0.018	3660			
					16 x 20	0.021	3330			
1800	188	12.5 x 25	0.019	3200	12.5 x 35	0.016	4120			
					16 x 25	0.017	3810			
2200	228	12.5 x 30	0.018	3660						
		16 x 20	0.021	3330						
2700	278	12.5 x 35	0.016	4120						
3300	338	16 x 25	0.017	3810						

Maximum Allowable Ripple Current (mArms) at 105°C 100kHz
Maximum Impedance (Ω) at 20°C 100kHz

Case Size ΦD x L (mm)

Specifications are subject to change without notice. Should a safety or technical concern arise regarding the product, please be sure to contact our sales offices or agents immediately.

STANDARD RATINGS

Voltage (Code)		63V (1J)			80V (1K)			100V (2A)		
Cap. (μF)	Code	Case Size	Impedance	Ripple Current	Case Size	Impedance	Ripple Current	Case Size	Impedance	Ripple Current
33	336							8 x 12	0.290	620
47	476				8 x 12	0.290	620	8 x 16	0.200	780
								10 x 12.5	0.170	780
56	566				8 x 16	0.200	780	10 x 12.5	0.170	780
68	686				10 x 12.5	0.170	780	8 x 20	0.160	1040
								10 x 12.5	0.170	780
82	826	8 x 12	0.180	720	8 x 20	0.160	1040	10 x 16	0.110	1040
100	107	8 x 16	0.130	990	10 x 16	0.110	1040	10 x 16	0.110	1040
								10 x 20	0.084	1430
		10 x 12.5	0.110	990				12.5 x 16	0.110	1430
120	127	10 x 12.5	0.110	990				10 x 25	0.069	1620
150	157	8 x 20	0.096	1200	10 x 20	0.084	1430	10 x 20	0.084	1430
					12.5 x 16	0.110	1430	12.5 x 20	0.062	1750
180	187	10 x 16	0.076	1200	10 x 25	0.069	1620			
220	227				12.5 x 20	0.062	1750	12.5 x 25	0.047	2210
270	277	10 x 20	0.056	1570	12.5 x 25	0.047	2210	12.5 x 30	0.042	2400
		12.5 x 16	0.072	1570				16 x 20	0.048	1950
330	337	10 x 20	0.056	1570	12.5 x 30	0.042	2400	12.5 x 35	0.036	2600
		10 x 25	0.046	1990	16 x 20	0.048	1950			
390	397	12.5 x 20	0.041	1990	12.5 x 35	0.036	2600	12.5 x 40	0.032	2860
								16 x 25	0.038	2430
		12.5 x 25	0.031	2460				18 x 20	0.045	2270
470	477	12.5 x 25	0.031	2460	12.5 x 40	0.032	2860	16 x 31.5	0.032	2640
					16 x 25	0.038	2430	18 x 20	0.045	2270
		12.5 x 30	0.028	2760	18 x 20	0.045	2270	18 x 25	0.036	2500
560	567	12.5 x 30	0.028	2760	16 x 31.5	0.032	2640	16 x 35.5	0.029	2860
		16 x 20	0.032	2380				18 x 31.5	0.030	2860
680	687	12.5 x 35	0.024	3040	16 x 35.5	0.029	2860	16 x 40	0.027	3510
					18 x 25	0.036	2500	18 x 35.5	0.027	3510
820	827	16 x 25	0.025	2890	16 x 40	0.027	3510	18 x 40	0.026	3860
					18 x 31.5	0.030	2860			
1000	108				18 x 35.5	0.027	3510			
1200	128				16 x 40	0.027	3510			
					18 x 40	0.026	2860			

Maximum Allowable Ripple Current (mArms) at 105°C 100kHz
Maximum Impedance (Ω) at 20°C 100kHz

Case Size ΦD x L (mm)

Specifications are subject to change without notice. Should a safety or technical concern arise regarding the product, please be sure to contact our sales offices or agents immediately.

+105˚C, High Ripple Current (高紋波), Longer Life Assurance (較長壽命), Low Impedance (低阻抗品)

FEATURES

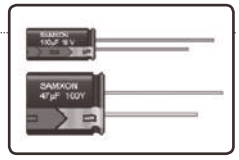

- Load life 105˚C and low ESR.
- Excellent ripple current capability.
- Used in communication equipments, switching power supply, industrial measuring instruments, etc.

SPECIFICATIONS

Item	Performance Characteristics
Operating Temperature Range	-40 to +105˚C
Rated Working Voltage Range	6.3 to 100V
Nominal Capacitance Range	15 to 4700μF
Capacitance Tolerance	±20% at 120Hz, +20˚C
Leakage Current	I ≤0.01CV or 3 (μA) whichever is greater measured after 2 minutes application of rated working voltage at +20˚C
tan δ (120Hz, +20˚C)	Working Voltage (V): 6.3, 10, 16, 25, 35, 50, 63, 100 tan δ (max.): 0.22, 0.19, 0.16, 0.14, 0.12, 0.10, 0.09, 0.08 For capacitance value >1000μF, add 0.02 per another 1000μF
Low Temperature Characteristics	Impedance ratio max. at 120Hz Working Voltage (V): 6.3, 10, 16, 25, 35, 50, 63, 100 Z-25˚C / Z+20˚C: 4, 3, 3, 3, 3, 3, 2, 2 Z-40˚C / Z+20˚C: 8, 6, 4, 4, 3, 3, 3, 3
High Temperature Loading	Test time : ΦD 6.3, 8, 10, 12.5; Load life 3,000h, 4,000h, 5,000h, 7,000h Test temperature : +105˚C Test conditions : Rated DC working voltage with rated ripple current Post test requirements at +20˚C Leakage current : ≤Initial specified value Cap. change : within ±25% of the initial measured value tan δ : ≤200% of the initial specified value
Shelf Life	At +105˚C no voltage applied after 1,000 hours and then being stabilized at +20˚C the capacitors shall meet the following limits Leakage current : ≤Initial specified value Cap. change : within ±20% of the initial measured value tan δ : ≤200% of the initial specified value
Industrial Standard	JIS C - 5101-4 (IEC 60384-4)

CASE SIZE TABLE

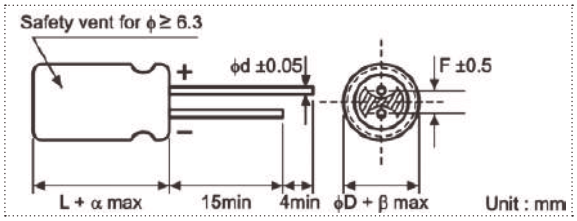

ΦD	6.3	8 (L <20)	8 (L ≥20)	10	12.5
F	2.5	3.5	3.5	5.0	5.0
Φd	0.5	0.5	0.6	0.6	0.6
α	(L <20) 1.5		(L ≥20) 2.0		
β	(D <20) 0.5		(D ≥20) 1.0		

PART NUMBER SYSTEM (EXAMPLE : 35V 2200μF)

1	2 3	4 5 6	7	8 9	10	11 12	13 14
E	RS	228	M	1V	K	30	RR

- 13 14: Type (Radial Bulk)
- 11 12: Case Length (30mm)
- 10: Diameter (16mm)
- 8 9: Voltage (35V)
- 7: Tolerance (±20%)
- 4 5 6: Capacitance (2200μF)
- 2 3: Series
- 1: E-CAP

STANDARD RATINGS

Voltage (Code)		6.3V (0J)			10V (1A)			16V (1C)		
Cap. (μF)	Code	Case Size	Impedance	Ripple Current	Case Size	Impedance	Ripple Current	Case Size	Impedance	Ripple Current
100	107							6.3 x 11	0.286	298
120	127							6.3 x 11	0.286	298
150	157				6.3 x 11	0.286	298	6.3 x 11	0.286	298
								8 x 12	0.169	561
180	187				6.3 x 11	0.286	298	6.3 x 11	0.286	298
								8 x 12	0.169	561
220	227	6.3 x 11	0.286	298	6.3 x 11	0.286	298	6.3 x 11	0.286	298
								8 x 12	0.169	561
270	227	6.3 x 11	0.286	298	6.3 x 11	0.286	298	8 x 12	0.169	561
					8 x 12	0.169	561			
330	337	6.3 x 11	0.286	298	6.3 x 11	0.286	298	8 x 12	0.169	561
		8 x 12	0.169	561	8 x 12	0.169	561			
390	397	8 x 12	0.169	561	8 x 12	0.169	561	8 x 12	0.169	561
470	477	8 x 12	0.169	561	8 x 12	0.169	561	8 x 12	0.169	561
								10 x 12.5	0.104	759
560	567	8 x 12	0.169	561	8 x 12	0.169	561	10 x 12.5	0.104	759
680	687	8 x 12	0.169	561	8 x 12	0.169	561	8 x 16	0.113	737
								10 x 12.5	0.104	759
820	827	8 x 12	0.169	561	10 x 12.5	0.104	759	10 x 16	0.078	1061
		10 x 12.5	0.104	759						
1000	108	8 x 12	0.169	561	8 x 16	0.113	737	10 x 16	0.078	1061
		10 x 12.5	0.104	759	10 x 16	0.078	1061			
1200	128	8 x 16	0.113	737	10 x 20	0.060	1228	10 x 20	0.060	1228
		10 x 12.5	0.104	759						
1500	158	8 x 20	0.090	921	10 x 20	0.060	1228	10 x 20	0.060	1228
		10 x 16	0.078	1061						
1800	188	10 x 20	0.060	1228	10 x 20	0.060	1228	10 x 25	0.055	1447
								12.5 x 20	0.046	1666
2200	228	10 x 20	0.060	1228	10 x 20	0.060	1228	12.5 x 20	0.046	1666
2700	278	10 x 25	0.055	1447	10 x 25	0.055	1447	12.5 x 25	0.039	1863
		12.5 x 20	0.046	1666	12.5 x 20	0.046	1666			
3300	338	10 x 25	0.055	1447	12.5 x 25	0.039	1863			
		12.5 x 20	0.046	1666						
3900	398	12.5 x 20	0.046	1666						
4700	478	12.5 x 25	0.039	1863						

Maximum Allowable Ripple Current (mArms) at 105˚C 100kHz
Maximum Impedance (Ω) at 20˚C 100kHz

Case Size ΦD x L (mm)

Specifications are subject to change without notice. Should a safety or technical concern arise regarding the product, please be sure to contact our sales offices or agents immediately.

STANDARD RATINGS

Voltage (Code)		25V (1E)			35V (1V)			50V (1H)		
Cap. (μF)	Code	Case Size	Impedance	Ripple Current	Case Size	Impedance	Ripple Current	Case Size	Impedance	Ripple Current
33	336							6.3 x 11	0.390	259
39	396							6.3 x 11	0.390	259
47	476				6.3 x 11	0.286	298	6.3 x 11	0.390	259
56	566				6.3 x 11	0.286	298	8 x 12	0.221	487
68	686				6.3 x 11	0.286	298	8 x 12	0.221	487
82	826	6.3 x 11	0.286	298	8 x 12	0.169	561	8 x 12	0.221	487
100	107	6.3 x 11	0.286	298	8 x 12	0.169	561	10 x 12.5	0.156	667
120	127	8 x 12	0.169	561	8 x 12	0.169	561	8 x 16	0.156	640
								10 x 12.5	0.156	667
150	157	8 x 12	0.169	561	8 x 12	0.169	561	10 x 16	0.109	921
180	187	8 x 12	0.169	561	10 x 12.5	0.104	759	8 x 20	0.118	798
								10 x 16	0.109	921
220	227	8 x 12	0.169	561	8 x 16	0.113	737	10 x 16	0.109	921
					10 x 12.5	0.104	759			
270	277	8 x 12	0.169	561	10 x 16	0.078	1061	10 x 25	0.072	1263
		10 x 12.5	0.104	759						
330	337	8 x 12	0.169	561	8 x 20	0.090	921	12.5 x 20	0.059	1456
		10 x 12.5	0.104	759	10 x 16	0.078	1061			
390	397	10 x 12.5	0.104	759	10 x 16	0.078	1061	12.5 x 20	0.059	1456
470	477	8 x 16	0.113	737	10 x 16	0.078	1061	12.5 x 25	0.050	1620
		10 x 12.5	0.104	759						
560	567	10 x 16	0.078	1061	10 x 20	0.060	1228	12.5 x 25	0.050	1620
680	687	10 x 16	0.078	1061	10 x 20	0.060	1228			
820	827	10 x 20	0.060	1228	10 x 25	0.055	1447			
					12.5 x 20	0.046	1666			
1000	108	10 x 20	0.060	1228	12.5 x 25	0.039	1863			
1200	128	10 x 20	0.060	1228						
1500	158	10 x 25	0.055	1447						
		12.5 x 20	0.046	1666						
1800	188	12.5 x 25	0.039	1863						
2200	228	12.5 x 25	0.039	1863						

Maximum Allowable Ripple Current (mArms) at 105˚C 100kHz
Maximum Impedance (Ω) at 20˚C 100kHz

Case Size ΦD x L (mm)

Specifications are subject to change without notice. Should a safety or technical concern arise regarding the product, please be sure to contact our sales offices or agents immediately.

STANDARD RATINGS

Voltage (Code)		63V (1J)			100V (2A)		
Cap. (μF)	Code	Case Size	Impedance	Ripple Current	Case Size	Impedance	Ripple Current
15	156				6.3 x 11	1.560	101
22	226	6.3 x 11	1.560	101			
27	276	6.3 x 11	1.560	101	8 x 12	0.819	203
33	336	6.3 x 11	1.560	101			
39	396	8 x 12	0.819	203	8 x 16	0.585	263
47	476	8 x 12	0.819	203	10 x 12.5	0.559	253
56	566	8 x 12	0.819	203	8 x 20	0.429	317
68	686	8 x 12	0.819	203	10 x 16	0.403	313
82	826	10 x 12.5	0.559	253	10 x 20	0.273	409
100	107	8 x 16	0.585	263	10 x 20	0.273	409
		10 x 12.5	0.559	253			
120	127	10 x 16	0.403	313	12.5 x 20	0.208	605
150	157	8 x 20	0.429	317			
180	187	10 x 20	0.273	409	12.5 x 25	0.156	688
220	227	10 x 20	0.273	409	12.5 x 25	0.156	688
270	277	12.5 x 20	0.208	605			
330	337	12.5 x 20	0.208	605			
390	397	12.5 x 25	0.156	688			

Maximum Allowable Ripple Current (mArms) at 105˚C 100kHz
Maximum Impedance (Ω) at 20˚C 100kHz

Case Size ΦD x L (mm)

RIPPLE CURRENT MULTIPLIER

Frequency Coefficient

Coefficient / Freq. (Hz) / Cap (μF)	120	1k	10k	100k
≤180	0.40	0.75	0.90	1.00
220~560	0.50	0.85	0.94	1.00
680~1800	0.60	0.87	0.95	1.00
2200~3900	0.75	0.90	0.95	1.00
4700	0.85	0.95	0.98	1.00

Specifications are subject to change without notice. Should a safety or technical concern arise regarding the product, please be sure to contact our sales offices or agents immediately.

FEATURES

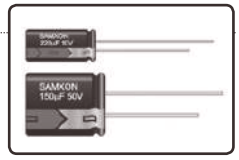

- Low impedance for high frequency.
- Load life of 4,000~10,000 hours at 105˚C.

SPECIFICATIONS

Item	Performance Characteristics
Operating Temperature Range	-40 to +105˚C
Rated Working Voltage Range	6.3 to 100V
Nominal Capacitance Range	2.2 to 15000µF
Capacitance Tolerance	±20% at 120Hz, +20˚C
Leakage Current	I ≤0.01CV or 3 (µA) whichever is greater measured after 2 minutes application of rated working voltage at +20˚C
tan δ (120Hz, +20˚C)	Working Voltage (V): 6.3, 10, 16, 25, 35, 50, 63, 100 tan δ (max.): 0.22, 0.19, 0.16, 0.14, 0.12, 0.10, 0.09, 0.08 For capacitance value >1000µF, add 0.02 per another 1000µF
Low Temperature Characteristics	Impedance ratio max. at 120Hz Rated Voltage (V): 6.3, 10, 16, 25, 35, 50, 63, 100 Z-25˚C / Z+20˚C: 4, 3, 2, 2, 2, 2, 2, 2 Z-40˚C / Z+20˚C: 8, 6, 4, 3, 3, 3, 3, 3
High Temperature Loading	Test time: ΦD / 5~6.3 / 8~10 / 12.5~ 6.3~10WV: 4,000h / 6,000h / 8,000h 16~100WV: 5,000h / 7,000h / 10,000h Test temperature: +105˚C Test conditions: Rated DC working voltage with rated ripple current Post test requirements at +20˚C Leakage current: ≤Initial specified value Cap. change: within ±25% of the initial measured value tan δ: ≤200% of the initial specified value
Shelf Life	At +105˚C no voltage applied after 1,000 hours and then being stabilized at +20˚C the capacitors shall meet the following limits Leakage current: ≤Initial specified value Cap. change: within ±25% of the initial measured value tan δ: ≤200% of the initial specified value
Industrial Standard	JIS C - 5101-4 (IEC 60384-4)

CASE SIZE TABLE

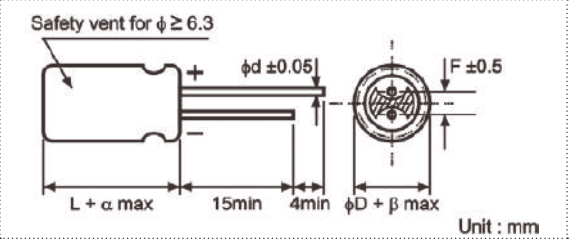

ΦD	6.3	8 (L <20)	8 (L ≥20)	10	12.5	16	18
F	2.5	3.5	3.5	5.0	5.0	7.5	7.5
Φd	0.5	0.5	0.6	0.6	0.6	0.8	0.8
α	(L <20) 1.5			(L ≥20) 2.0			
β	(D <20) 0.5			(D ≥20) 1.0			

RIPPLE CURRENT MULTIPLIER

Frequency Coefficient

Coefficient / Freq. (Hz) / Cap (µF)	120	1k	10k	100k
2.2~10	0.42	0.60	0.80	1.00
22~33	0.55	0.75	0.90	1.00
47~330	0.70	0.85	0.95	1.00
470~1000	0.75	0.90	0.98	1.00
2200~15000	0.80	0.95	1.00	1.00

PART NUMBER SYSTEM (EXAMPLE : 10V 1000µF)

1	2 3	4 5 6	7	8 9	10	11 12	13 14
E	GY	108	M	1A	G	16	RR

- RR — Type (Radial Bulk)
- 16 — Case Length (16mm)
- G — Diameter (10mm)
- 1A — Voltage (10V)
- M — Tolerance (±20%)
- 108 — Capacitance (1000µF)
- GY — Series
- E — E-CAP

SAMXON®
Aluminum Electrolytic Capacitors

+105˚C, Longer Life Assurance (較長壽命), Low Impedance (低阻抗品)

STANDARD RATINGS

Voltage (Code)		6.3V (0J)			10V (1A)			16V (1C)		
Cap. (μF)	Code	Case Size	Impedance	Ripple Current	Case Size	Impedance	Ripple Current	Case Size	Impedance	Ripple Current
47	476							5 x 11	0.900	150
100	107	5 x 11	0.900	150	5 x 11	0.900	150	6.3 x 11	0.400	250
220	227	6.3 x 11	0.400	250	6.3 x 11	0.400	250	6.3 x 11	0.400	250
								8 x 12	0.250	400
330	337	6.3 x 11	0.400	250	8 x 12	0.250	400	8 x 12	0.250	400
470	477	8 x 12	0.250	400	8 x 12	0.250	400	8 x 12	0.250	400
								10 x 12.5	0.160	580
1000	108	10 x 12.5	0.160	580	10 x 16	0.120	770	10 x 16	0.120	770
								10 x 20	0.078	1050
2200	228	12.5 x 20	0.062	1300	12.5 x 20	0.062	1300	12.5 x 25	0.048	1650
3300	338	12.5 x 20	0.062	1300	12.5 x 25	0.048	1650	16 x 25	0.034	1850
4700	478	16 x 25	0.034	1850	16 x 25	0.034	1850	16 x 30	0.029	2000
6800	688	16 x 25	0.034	1850	16 x 30	0.029	2000	18 x 35	0.025	2200
10000	109	16 x 30	0.029	2000	18 x 35	0.025	2200			
15000	159	18 x 35	0.025	2200						

Maximum Allowable Ripple Current (mArms) at 105˚C 100kHz
Maximum Impedance (Ω) at 20˚C 100kHz
Case Size ΦD x L (mm)

Voltage (Code)		25V (1E)			35V (1V)			50V (1H)		
Cap. (μF)	Code	Case Size	Impedance	Ripple Current	Case Size	Impedance	Ripple Current	Case Size	Impedance	Ripple Current
2.2	225							5 x 11	2.500	43
3.3	335							5 x 11	2.200	53
4.7	475							5 x 11	1.900	88
10	106							5 x 11	1.500	100
22	226							5 x 11	0.900	150
33	336	5 x 11	0.900	150	5 x 11	0.900	150	6.3 x 11	0.400	250
47	476	5 x 11	0.900	150	6.3 x 11	0.400	250	6.3 x 11	0.400	250
100	107	6.3 x 11	0.400	250	6.3 x 11	0.400	250	8 x 12	0.250	400
					8 x 12	0.250	400			
220	227	8 x 12	0.250	400	10 x 12.5	0.160	580	10 x 16	0.120	770
330	337	8 x 12	0.250	400	10 x 16	0.120	770	10 x 20	0.078	1050
		10 x 12.5	0.160	580						
470	477	8 x 16	0.220	510	10 x 20	0.078	1050	10 x 20	0.078	1050
		10 x 12.5	0.160	580				12.5 x 20	0.062	1300
		10 x 16	0.120	770						
560	567							12.5 x 16	0.078	1050
680	687	10 x 12.5	0.160	580				12.5 x 20	0.062	1300
1000	108	10 x 20	0.078	1050	12.5 x 20	0.062	1300	16 x 25	0.034	1850
		12.5 x 20	0.062	1300	12.5 x 25	0.048	1650			
2200	228	12.5 x 25	0.048	1650	16 x 25	0.034	1850	18 x 35	0.025	2200
		16 x 25	0.034	1850	16 x 30	0.029	2000			
3300	338	16 x 30	0.029	2000	18 x 35	0.025	2200	18 x 35	0.025	2200
4700	478	18 x 35	0.025	2200						

Maximum Allowable Ripple Current (mArms) at 105˚C 100kHz
Maximum Impedance (Ω) at 20˚C 100kHz
Case Size ΦD x L (mm)

Specifications are subject to change without notice. Should a safety or technical concern arise regarding the product, please be sure to contact our sales offices or agents immediately.

STANDARD RATINGS

Voltage (Code)		63V (1J)			100V (2A)		
Cap. (μF)	Code	Case Size	Impedance	Ripple Current	Case Size	Impedance	Ripple Current
22	226	6.3 x 11	1.300	140	8 x 12	0.630	160
33	336	6.3 x 11	1.200	140	10 x 12.5	0.430	230
47	476	8 x 12	0.630	210	10 x 16	0.310	290
100	107	10 x 12.5	0.430	300	10 x 16	0.310	290
					12.5 x 20	0.160	430
220	227	10 x 20	0.210	520	16 x 25	0.073	900
330	337	12.5 x 20	0.160	660	16 x 25	0.073	900
470	477	12.5 x 25	0.120	750			
1000	108	16 x 30	0.054	1390			

Maximum Allowable Ripple Current (mArms) at 105˚C 100kHz
Maximum Impedance (Ω) at 20˚C 100kHz

Case Size ΦD x L (mm)

Specifications are subject to change without notice. Should a safety or technical concern arise regarding the product, please be sure to contact our sales offices or agents immediately.

SAMXON®
Aluminum Electrolytic Capacitors

-55˚C~+105˚C, Wide Temperature (寬溫度), High Ripple Current (高紋波), Low Impedance (低阻抗品)

FEATURES

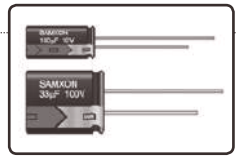

- Load life of 1,000~4,000 hours at 105˚C
- Enabled high ripple current by a reduction of impedance at high frequency range.

SPECIFICATIONS

Item	Performance Characteristics
Operating Temperature Range	-55 to +105˚C
Rated Working Voltage Range	6.3 to 100V
Nominal Capacitance Range	22 to 4700μF
Capacitance Tolerance	±20% at 120Hz, +20˚C
Leakage Current	I ≤0.01CV or 3 (μA) whichever is greater measured after 2 minutes application of rated working voltage at +20˚C
tan δ (120Hz, +20˚C)	Working Voltage (V): 6.3, 10, 16, 25, 35, 50, 63, 100 tan δ (max.): 0.22, 0.19, 0.16, 0.14, 0.12, 0.10, 0.09, 0.08 For capacitance value >1000μF, add 0.02 per another 1000μF
Low Temperature Characteristics	Impedance ratio max. at 120 Hz Working Voltage (V): 6.3, 10, 16, 25, 35, 50, 63, 100 Z-25˚C / Z+20˚C: 4, 3, 2, 2, 2, 2, 2, 2 Z-40˚C / Z+20˚C: 8, 6, 4, 3, 3, 3, 3, 3
High Temperature Loading	Test time : ΦD: 6.3, 8, 10, 12.5; Load life: 1,000h, 2,000h, 3,000h, 4,000h Test temperature : +105˚C Test conditions : Rated DC working voltage with rated ripple current Post test requirements at +20˚C Leakage current : ≤Initial specified value Cap. change : within ±25% of the initial measured value tan δ : ≤200% of the initial specified value
Shelf Life	At +105˚C no voltage applied after 1,000 hours and then being stabilized at +20˚C the capacitors shall meet the following limits Leakage current : ≤Initial specified value Cap. change : within ±20% of the initial measured value tan δ : ≤200% of the initial specified value
Industrial Standard	JIS C - 5101-4 (IEC 60384-4) EIAJ RC - 2372

CASE SIZE TABLE

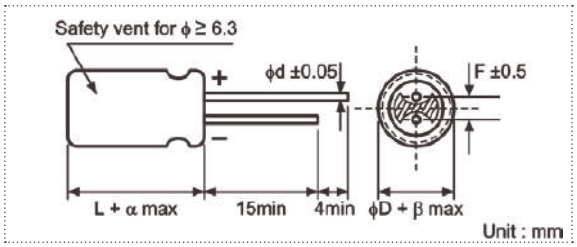

ΦD	6.3	8(L <20)	8(L <20)	10	12.5
F	2.5	3.5	3.5	5.0	5.0
Φd	0.5	0.5	0.6	0.6	0.6
α	(L <20) 1.5			(L ≥20) 2.0	
β	(D <20) 0.5			(D ≥20) 1.0	

RIPPLE CURRENT MULTIPLIER

Frequency Coefficient

Coefficient / Freq. (Hz) / Cap (μF)	60	120	1k	10k	100k
22~330	0.55	0.75	0.85	0.90	1.00
390~1000	0.70	0.75	0.90	0.95	1.00
1200~2200	0.75	0.80	0.90	0.95	1.00
2700~4700	0.80	0.85	0.95	1.00	1.00

PART NUMBER SYSTEM (EXAMPLE : 16V 330μF)

1	2 3	4 5 6	7	8 9	10	11 12	13 14
E	RF	337	M	1C	F	12	RR

- Type (Radial Bulk)
- Case Length (12mm)
- Diameter (8mm)
- Voltage (16V)
- Tolerance (±20%)
- Capacitance (330μF)
- Series
- E-CAP

STANDARD RATINGS

Voltage (Code)		6.3V (0J)			10V (1A)			16V (1C)		
Cap. (μF)	Code	Case Size	Impedance	Ripple Current	Case Size	Impedance	Ripple Current	Case Size	Impedance	Ripple Current
100	107							6.3 x 11	0.220	340
120	127							6.3 x 11	0.220	340
150	157				6.3 x 11	0.220	340	6.3 x 11	0.220	340
180	187	6.3 x 11	0.220	340	6.3 x 11	0.220	340	6.3 x 11	0.220	340
220	227	6.3 x 11	0.220	340	6.3 x 11	0.220	340	8 x 12	0.130	640
270	277	6.3 x 11	0.220	340	6.3 x 11	0.220	340	8 x 12	0.130	640
330	337	6.3 x 11	0.220	340	8 x 12	0.130	640	8 x 12	0.130	640
390	397	8 x 12	0.130	640	8 x 12	0.130	640	8 x 12	0.130	640
470	477	8 x 12	0.130	640	8 x 12	0.130	640	8 x 12	0.130	640
								10 x 12.5	0.080	865
560	567	8 x 12	0.130	640	8 x 12	0.130	640	10 x 12.5	0.080	865
680	687	8 x 12	0.130	640	8 x 12	0.130	640	8 x 16	0.087	840
								10 x 12.5	0.080	865
820	827	8 x 12	0.130	640	10 x 12.5	0.080	865	10 x 16	0.060	1210
		10 x 12.5	0.080	865						
1000	108	8 x 12	0.130	640	8 x 16	0.087	840	10 x 16	0.060	1210
		10 x 12.5	0.080	865	10 x 16	0.060	1210			
1200	128	8 x 16	0.087	840	10 x 20	0.046	1400	10 x 20	0.046	1400
		10 x 12.5	0.080	865						
1500	158	10 x 16	0.060	1210	10 x 20	0.046	1400	10 x 20	0.046	1400
1800	188	10 x 20	0.046	1400	10 x 20	0.046	1400	12.5 x 20	0.035	1900
2200	228	10 x 20	0.046	1400	10 x 20	0.046	1400	12.5 x 20	0.035	1900
2700	278	10 x 25	0.042	1650	12.5 x 20	0.035	1900	12.5 x 25	0.030	2124
		12.5 x 20	0.035	1900						
3300	338	10 x 25	0.042	1650	12.5 x 25	0.030	2124			
		12.5 x 20	0.035	1900						
3900	398	12.5 x 20	0.035	1900						
4700	478	12.5 x 25	0.030	2124						

Maximum Allowable Ripple Current (mArms) at 105˚C 100kHz
Maximum Impedance (Ω) at 20˚C 100kHz

Case Size ΦD x L (mm)

Specifications are subject to change without notice. Should a safety or technical concern arise regarding the product, please be sure to contact our sales offices or agents immediately.

STANDARD RATINGS

Voltage (Code)		25V (1E)			35V (1V)			50V (1H)		
Cap. (μF)	Code	Case Size	Impedance	Ripple Current	Case Size	Impedance	Ripple Current	Case Size	Impedance	Ripple Current
33	336							6.3 x 11	0.300	295
39	396							6.3 x 11	0.300	295
47	476				6.3 x 11	0.220	340	6.3 x 11	0.300	295
56	566				6.3 x 11	0.220	340	8 x 12	0.170	555
68	686				6.3 x 11	0.220	340	8 x 12	0.170	555
82	826	6.3 x 11	0.220	340	8 x 12	0.130	640	8 x 12	0.170	555
100	107	6.3 x 11	0.220	340	8 x 12	0.130	640	10 x 12.5	0.120	760
120	127	8 x 12	0.130	640	8 x 12	0.130	640	8 x 16	0.120	730
								10 x 12.5	0.120	760
150	157	8 x 12	0.130	640	8 x 12	0.130	640	10 x 16	0.084	1050
180	187	8 x 12	0.130	640	10 x 12.5	0.080	865	8 x 20	0.091	910
								10 x 16	0.084	1050
220	227	8 x 12	0.130	640	8 x 16	0.087	840	10 x 16	0.084	1050
					10 x 12.5	0.080	865			
270	277	10 x 12.5	0.080	865	10 x 16	0.060	1210	10 x 25	0.055	1440
330	337	8 x 12	0.130	640	8 x 20	0.069	1050	12.5 x 20	0.045	1660
		10 x 12.5	0.080	865	10 x 16	0.060	1210			
390	397	10 x 12.5	0.080	865	10 x 16	0.060	1210	12.5 x 20	0.045	1660
470	477	8 x 16	0.087	840	10 x 16	0.060	1210	12.5 x 25	0.034	1950
		10 x 12.5	0.080	865						
560	567	10 x 16	0.060	1210	10 x 20	0.046	1400	12.5 x 25	0.034	1950
680	687	10 x 16	0.060	1210	10 x 20	0.046	1400			
820	827	10 x 20	0.046	1400	12.5 x 20	0.035	1900			
1000	108	10 x 20	0.046	1400	12.5 x 25	0.030	2124			
1200	128	10 x 20	0.046	1400						
1500	158	10 x 25	0.042	1650						
		12.5 x 20	0.035	1900						
1800	188	12.5 x 25	0.030	2124						
2200	228	12.5 x 25	0.030	2124						

Maximum Allowable Ripple Current (mArms) at 105˚C 100kHz
Maximum Impedance (Ω) at 20˚C 100kHz

Case Size ΦD x L (mm)

Specifications are subject to change without notice. Should a safety or technical concern arise regarding the product, please be sure to contact our sales offices or agents immediately.

STANDARD RATINGS

Voltage (Code)		63V (1J)			100V (2A)		
Cap. (μF)	Code	Case Size	Impedance	Ripple Current	Case Size	Impedance	Ripple Current
22	226	6.3 x 11	0.960	115			
33	336	6.3 x 11	0.960	115			
39	396	8 x 12	0.504	232	8 x 16	0.360	300
47	476	8 x 12	0.504	232	10 x 12.5	0.344	314
56	566	8 x 12	0.504	232	8 x 20	0.264	362
68	686	8 x 12	0.504	232	10 x 16	0.248	357
82	826	10 x 12.5	0.344	314	10 x 20	0.168	466
100	107	8 x 16	0.360	300	10 x 20	0.168	466
		10 x 12.5	0.344	314			
120	127	10 x 16	0.248	357	12.5 x 20	0.128	690
150	157	8 x 20	0.264	362			
180	187	10 x 20	0.168	466	12.5 x 25	0.096	922
220	227	10 x 20	0.168	466	12.5 x 25	0.096	922
270	277	12.5 x 20	0.128	690			
330	337	12.5 x 20	0.128	690			
390	397	12.5 x 25	0.096	922			

Maximum Allowable Ripple Current (mArms) at 105˚C 100kHz
Maximum Impedance (Ω) at 20˚C 100kHz

Case Size ΦD x L (mm)

Specifications are subject to change without notice. Should a safety or technical concern arise regarding the product, please be sure to contact our sales offices or agents immediately.

SAMXON®
Aluminum Electrolytic Capacitors

Long Life Assurance (長壽命), High Ripple Current (高紋波)

FEATURES

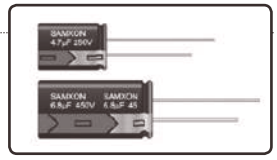

- High ripple current.
- For electronic ballast, power supply.

SPECIFICATIONS

Item	Performance Characteristics
Operating Temperature Range	-40 to +105˚C; -25 to +105˚C
Rated Working Voltage Range	160 to 400V; 450V to 500V
Nominal Capacitance Range	1 to 220μF
Capacitance Tolerance	±20% at 120Hz, +20˚C
Leakage Current	I ≤0.02CV +25 (μA) after 2 minutes application of rated working voltage at +20˚C

	Working Voltage (V)	160	200	250	350	400	450	500
tan δ (120Hz, +20˚C)	tan δ (max.)	0.15	0.15	0.15	0.20	0.20	0.20	0.24
Surge Voltage	Working Voltage (V)	160	200	250	350	400	450	500
	Surge Voltage (V)	200	250	300	400	450	500	550
Low Temperature Characteristics	Impedance ratio max. at 120Hz							
	Working Voltage (V)	160	200	250	350	400	450	500
	Z-25˚C / Z+20˚C	3	3	3	5	5	6	6

High Temperature Loading	Test time : 3,000 hours Test temperature : +105˚C Test conditions : Rated DC working voltage with rated ripple current	Post test requirements at +20˚C Leakage current : ≤Initial specified value Cap. change : within ±20% of the initial measured value tan δ : ≤200% of the initial specified value
Shelf Life	At +105˚C no voltage applied after 1,000 hours and then being stabilized at +20˚C the capacitors shall meet the following limits Leakage current : ≤Initial specified value Cap. change : within ±20% of the initial measured value tan δ : ≤200% of the initial specified value	
Industrial Standard	JIS C - 5101-4 (IEC 60384-4)	

CASE SIZE TABLE

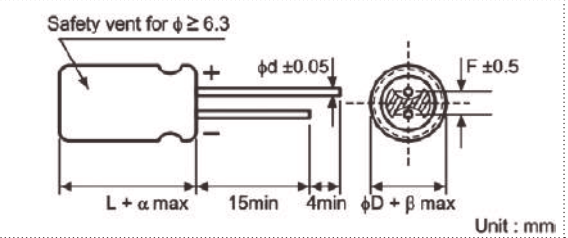

ΦD	8 (L <20)	8 (L ≥20)	10	12.5	16	18
F	3.5	3.5	5.0	5.0	7.5	7.5
Φd	0.5	0.6	0.6	0.6	0.8	0.8
α	(L <20) 1.5			(L ≥20) 2.0		
β	(D <20) 0.5			(D ≥20) 1.0		

RIPPLE CURRENT MULTIPLIER

Frequency Coefficient

Coefficient / Freq. (Hz) / Cap (μF)	120	1k	10k	100k
1~5.6	0.20	0.40	0.80	1.00
6.8~180	0.40	0.75	0.90	1.00
≥220	0.50	0.85	0.94	1.00

PART NUMBER SYSTEM (EXAMPLE : 200V 220μF)

1	2 3	4 5 6	7	8 9	10	11 12	13 14
E	RR	227	M	2D	L	30	RR

- Type (Radial Bulk)
- Case Length (30mm)
- Diameter (18mm)
- Voltage (200V)
- Tolerance (±20%)
- Capacitance (220μF)
- Series
- E-CAP

STANDARD RATINGS

Voltage (Code)		160V (2C)		200V (2D)		250V (2E)		350V (2V)	
Cap. (μF)	Code	Case Size	Ripple Current	Case Size	Ripple Current	Case Size	Ripple Current	Case Size	Ripple Current
4.7	475					8 x 12	160	10 x 12.5	150
5.6	565							10 x 12.5	180
6.8	685			8 x 12	204	8 x 12	215	10 x 16	280
						10 x 12.5	250		
10	106	10 x 16	320	10 x 16	320	10 x 16	320	10 x 20	350
22	226	10 x 20	500	10 x 16	453	10 x 16	453	12.5 x 20	650
				10 x 20	500	10 x 20	500		
33	336	10 x 20	650	10 x 16	589	10 x 16	640	16 x 20	900
				10 x 20	650	12.5 x 20	800		
47	476	10 x 20	750	12.5 x 20	980	12.5 x 20	980	16 x 20	1080
68	686	12.5 x 20	1180	12.5 x 25	1300	16 x 20	1300	18 x 25	1470
				16 x 20	1300				
82	826			16 x 20	1380	16 x 20	1380	18 x 25	1530
100	107	12.5 x 25	1420	16 x 20	1420	16 x 25	1530		
		16 x 20	1420						
150	157	16 x 25	1890	16 x 25	1890	18 x 25	1940		
220	227	18 x 25	2370	18 x 30	2648				

Maximum Allowable Ripple Current (mArms) at 105˚C 100kHz

Case Size ΦD x L (mm)

Voltage (Code)		400V (2G)		450V (2W)		500V (2H)	
Cap. (μF)	Code	Case Size	Ripple Current	Case Size	Ripple Current	Case Size	Ripple Current
1	105	8 x 12	60				
1.5	155	8 x 12	90				
		10 x 12.5	100				
1.8	185	8 x 12	95				
		10 x 12.5	120				
2.2	225	8 x 12	95	8 x 12	105		
		10 x 12.5	140				
3.3	335	8 x 12	130				
		10 x 12.5	150				
4.7	475	8 x 12	171	8 x 16	176		
		10 x 16	220	10 x 20	220		
5.6	565	10 x 16	250	10 x 20	250		
6.8	685	10 x 16	280	10 x 12.5	228		
				10 x 20	280		
10	106	10 x 16	317	10 x 20	397	12.5 x 20	320
		10 x 20	350	12.5 x 20	450		
15	156	12.5 x 15	487	12.5 x 25	600	12.5 x 25	440
		12.5 x 20	550			16 x 20	440
22	226	12.5 x 20	760	12.5 x 25	698	12.5 x 35	560
						16 x 25	560
				16 x 20	730	18 x 20	560
33	336	12.5 x 25	861	16 x 20	891	16 x 30	700
		16 x 20	900	16 x 25	980	18 x 25	700
47	476	12.5 x 25	1027	16 x 25	1121	18 x 30	880
		16 x 20	1073	18 x 20	1093		
		16 x 25	1180				
		18 x 20	1180	18 x 25	1200		
68	686	16 x 25	1374			18 x 35	1000
		16 x 30	1488				
		18 x 25	1470				

Maximum Allowable Ripple Current (mArms) at 105˚C 100kHz

Case Size ΦD x L (mm)

Specifications are subject to change without notice. Should a safety or technical concern arise regarding the product, please be sure to contact our sales offices or agents immediately.

SAMXON®
Aluminum Electrolytic Capacitors

Long Life Assurance (長壽命), High Ripple Current (高紋波)

FEATURES

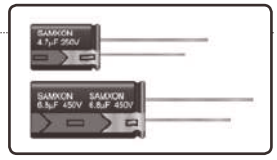

- High ripple current & load life 5,000 hours.
- For electronic ballast, power supply.

SPECIFICATIONS

Item	Performance Characteristics							
Operating Temperature Range	-40 to +105˚C				-25 to +105˚C			
Rated Working Voltage Range	160 to 400V				450V to 500V			
Nominal Capacitance Range	1 to 220μF							
Capacitance Tolerance	±20% at 120Hz, +20˚C							
Leakage Current	I ≤0.02CV +25 (μA) after 2 minutes application of rated working voltage at +20˚C							
tan δ (120Hz, +20˚C)	Working Voltage (V)	160	200	250	350	400	450	500
	tan δ (max.)	0.15	0.15	0.15	0.20	0.20	0.20	0.24
Low Temperature Characteristics	Impedance ratio max. at 120Hz							
	Working Voltage (V)	160	200	250	350	400	450	500
	Z-25˚C / Z+20˚C	3	3	3	5	5	6	6
High Temperature Loading	Test time : 5,000 hours Test temperature : +105˚C Test conditions : Rated DC working voltage with rated ripple current				Post test requirements at +20˚C Leakage current : ≤Initial specified value Cap. change : within ±20% of the initial measured value tan δ : ≤200% of the initial specified value			
Shelf Life	At +105˚C no voltage applied after 1,000 hours and then being stabilized at +20˚C the capacitors shall meet the following limits Leakage current : ≤Initial specified value Cap. change : within ±20% of the initial measured value tan δ : ≤200% of the initial specified value							
Industrial Standard	JIS C - 5101-4 (IEC 60384-4)							

CASE SIZE TABLE

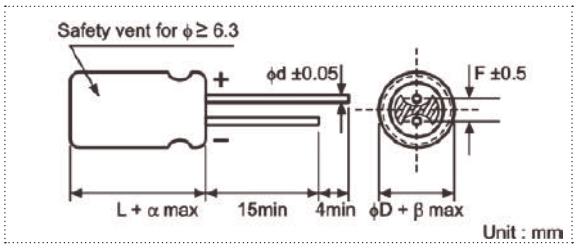

ΦD	8 (L <20)	8 (L ≥20)	10	12.5	16	18
F	3.5	3.5	5.0	5.0	7.5	7.5
Φd	0.5	0.6	0.6	0.6	0.8	0.8
α	(L <20) 1.5			(L ≥20) 2.0		
β	(D <20) 0.5			(D ≥20) 1.0		

RIPPLE CURRENT MULTIPLIER

Frequency Coefficient

Coefficient / Freq. (Hz) / Cap (μF)	120	1k	10k	100k
1~5.6	0.20	0.40	0.80	1.00
6.8~180	0.40	0.75	0.90	1.00
≥220	0.50	0.85	0.94	1.00

PART NUMBER SYSTEM (EXAMPLE : 250V 22μF)

1	2 3	4 5 6	7	8 9	10	11 12	13 14
E	RT	226	M	2E	G	20	RR

- 13 14: Type (Radial Bulk)
- 11 12: Case Length (20mm)
- 10: Diameter (10mm)
- 8 9: Voltage (250V)
- 7: Tolerance (±20%)
- 4 5 6: Capacitance (22μF)
- 2 3: Series
- 1: E-CAP

STANDARD RATINGS

Voltage (Code)		160V (2C)		200V (2D)		250V (2E)		350V (2V)	
Cap. (μF)	Code	Case Size	Ripple Current	Case Size	Ripple Current	Case Size	Ripple Current	Case Size	Ripple Current
3.3	335							8 x 12	110
4.7	475					8 x 12	160	10 x 12.5	150
5.6	565							10 x 12.5	180
6.8	685			8 x 12	204	8 x 12	215	10 x 16	280
						10 x 12.5	250		
10	106	10 x 16	320	10 x 16	320	10 x 16	320	10 x 20	350
15	156					10 x 16	380		
22	226	10 x 12.5	400	10 x 16	453	10 x 16	453	12.5 x 20	650
		10 x 20	500	10 x 20	500	10 x 20	500		
33	336	10 x 20	650	10 x 16	589	10 x 16	640	16 x 20	900
				10 x 20	650	12.5 x 20	800		
47	476	10 x 20	750	12.5 x 20	980	12.5 x 20	980	16 x 20	1080
							1200*		
68	686	10 x 20	950	12.5 x 25	1300	16 x 20	1300	18 x 25	1470
		12.5 x 20	1180	16 x 20	1300	16 x 25	1380		
82	826	10 x 20	1040	16 x 20	1380	16 x 20	1380	18 x 25	1530
						16 x 25	1430		
100	107	12.5 x 25	1420	16 x 20	1420	12.5 x 30	1450		
		16 x 20	1420			16 x 25	1530		
150	157	16 x 25	1890	16 x 25	1890	18 x 25	1940		
220	227	18 x 25	2370	18 x 30	2648	18 x 35	2450		
330	337	18 x 30	2560	18 x 35	2780				
470	477	18 x 35	2760						

Maximum Allowable Ripple Current (mArms) at 105˚C 100kHz

Case Size ΦD x L (mm)

* Special item with higher ripple current.

Specifications are subject to change without notice. Should a safety or technical concern arise regarding the product, please be sure to contact our sales offices or agents immediately.

STANDARD RATINGS

Voltage (Code)		400V (2G)		450V (2W)		500V (2H)	
Cap. (μF)	Code	Case Size	Ripple Current	Case Size	Ripple Current	Case Size	Ripple Current
1	105	8 x 12	60				
1.5	155	8 x 12	90				
		10 x 12.5	100				
1.8	185	8 x 12	95				
		10 x 12.5	120				
2.2	225	8 x 12	95	8 x 12	105		
		10 x 12.5	140				
3.3	335	8 x 12	130				
		10 x 12.5	150				
4.7	475	8 x 12	171	8 x 16	176		
				10 x 12.5	180		
		10 x 16	220	10 x 20	220		
5.6	565	10 x 16	250	10 x 20	250		
6.8	685	8 x 16	230	10 x 12.5	228		
		10 x 16	280	10 x 20	280		
10	106	10 x 16	317	10 x 20	397	12.5 x 20	320
		10 x 20	350	12.5 x 20	450		
15	156	10 x 16	380	12.5 x 25	600	12.5 x 25	440
		12.5 x 20	487			16 x 20	440
22	226	12.5 x 20	760	12.5 x 20	620	12.5 x 35	560
				12.5 x 25	698	16 x 25	560
				16 x 20	730	18 x 20	560
33	336	12.5 x 25	861	16 x 20	891	16 x 30	700
		16 x 20	900	16 x 25	980	18 x 25	700
47	476	12.5 x 25	1027	16 x 25	1121	18 x 30	880
		16 x 20	1073	18 x 20	1093		
		16 x 25	1180	18 x 25	1200		
		18 x 20	1180				
56	566	16 x 25	1250	16 x 25	1220		
		18 x 20	1250	18 x 20	1220		
68	686	16 x 25	1374	18 x 25	1350	18 x 35	1000
		16 x 30	1488				
		18 x 25	1470				
82	826	16 x 30	1600	18 x 30	1600		
		18 x 25	1600				
100	107	18 x 30	1850	18 x 35	2088		
120	127	18 x 30	2000	18 x 40	2325		

Maximum Allowable Ripple Current (mArms) at 105°C 100kHz

Case Size ΦD x L (mm)

* Special item with higher ripple current.
Specifications are subject to change without notice. Should a safety or technical concern arise regarding the product, please be sure to contact our sales offices or agents immediately.

TEMPERATURE CHARACTERISTICS

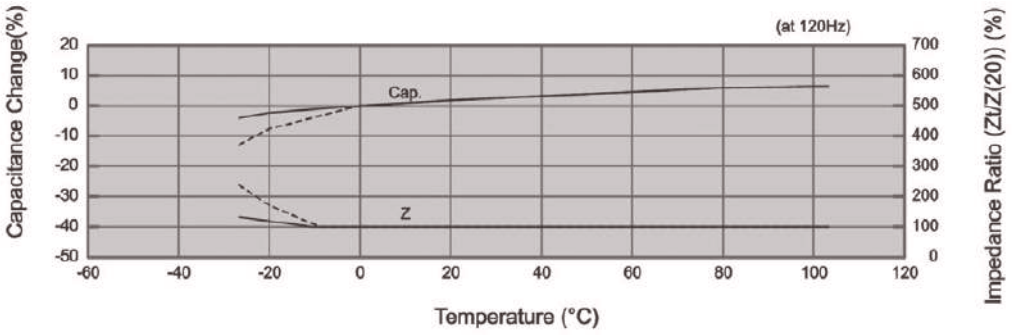

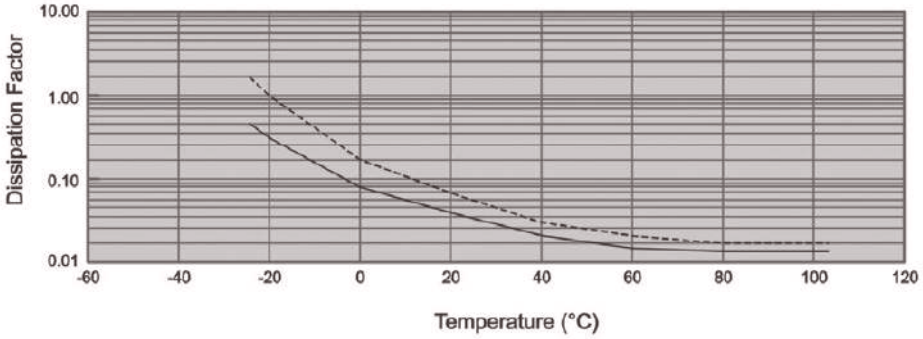

ENDURANCE

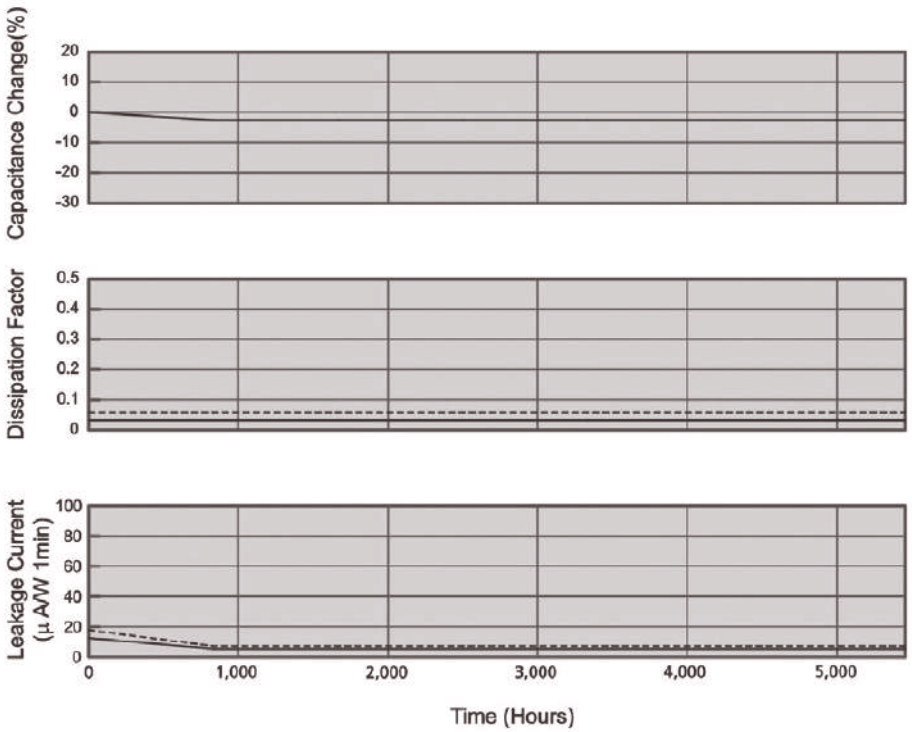

SAMXON®
Aluminum Electrolytic Capacitors

105˚C, Longer Life Assurance (較長壽命)

FEATURES

- Load life of 8,000~10,000 hours at 105˚C.
- For electronic ballast.

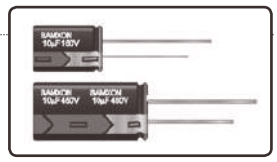

SPECIFICATIONS

Item	Performance Characteristics
Operating Temperature Range	-25 to +105˚C
Rated Working Voltage Range	160 to 450V
Nominal Capacitance Range	1 to 220μF
Capacitance Tolerance	±20% at 120Hz, +20˚C
Leakage Current	I ≤0.02CV +25 (μA) after 2 minutes application of rated working voltage at +20˚C
tan δ (120Hz, +20˚C)	Working Voltage (V): 160, 200, 250, 350, 400, 450 tan δ (max.): 0.15, 0.15, 0.15, 0.20, 0.20, 0.20
Low Temperature Characteristics	Impedance ratio max. at 120Hz Rated Voltage (V): 160, 200, 250, 350, 400, 450 Z-25˚C / Z+20˚C: 3, 3, 3, 6, 6, 6
High Temperature Loading	Test time : ΦD: 8~10, 12.5~18; Load life: 8,000h, 10,000h Test temperature : +105˚C Test conditions : Rated DC working voltage with rated ripple current Post test requirements at +20˚C Leakage current : ≤Initial specified value Cap. change : within ±20% of the initial measured value tan δ : ≤200% of the initial specified value
Shelf Life	At +105˚C no voltage applied after 1,000 hours and then being stabilized at +20˚C the capacitors shall meet the following limits Leakage current : ≤Initial specified value Cap. change : within ±20% of the initial measured value tan δ : ≤200% of the initial specified value
Industrial Standard	JIS C - 5101-4 (IEC 60384-4)

CASE SIZE TABLE

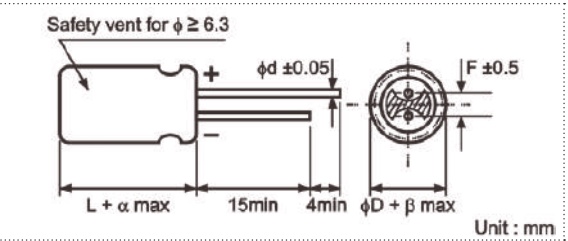

ΦD	8 (L <20)	8 (L ≥20)	10	12.5	16	18
F	3.5	3.5	5.0	5.0	7.5	7.5
Φd	0.5	0.6	0.6	0.6	0.8	0.8
α	(L <20) 1.5			(L ≥20) 2.0		
β	(D <20) 0.5			(D ≥20) 1.0		

RIPPLE CURRENT MULTIPLIER

Frequency Coefficient

Coefficient / Freq. (Hz) / Cap (μF)	120	1k	10k	100k
1~5.6	0.20	0.40	0.80	1.00
6.8~180	0.40	0.75	0.90	1.00
≥220	0.50	0.85	0.94	1.00

PART NUMBER SYSTEM (EXAMPLE : 200V 220μF)

1	2 3	4 5 6	7	8 9	10	11 12	13 14
E	RE	227	M	2D	L	30	RR

- Type (Radial Bulk)
- Case Length (30mm)
- Diameter (18mm)
- Voltage (200V)
- Tolerance (±20%)
- Capacitance (220μF)
- Series
- E-CAP

STANDARD RATINGS

Voltage (Code)		160V (2C)		200V (2D)		250V (2E)		350V (2V)	
Cap. (μF)	Code	Case Size	Ripple Current	Case Size	Ripple Current	Case Size	Ripple Current	Case Size	Ripple Current
6.8	685	8 x 12	160	8 x 12	160	8 x 12	150	10 x 16	220
10	106	10 x 16	250	10 x 16	250	10 x 12.5	228	10 x 16	254
						10 x 20	280	10 x 20	280
22	226	10 x 20	500	10 x 20	500	12.5 x 20	600	12.5 x 20	350
33	336	10 x 20	500	12.5 x 20	600	12.5 x 20	600	16 x 20	500
47	476	12.5 x 20	660	12.5 x 20	660	12.5 x 25	720	16 x 25	660
						16 x 20		18 x 20	
68	686	12.5 x 25	760	12.5 x 25	760	16 x 25	920	16 x 30	850
		16 x 20		16 x 20		18 x 20		18 x 25	
100	107	16 x 25	1120	16 x 25	1120	16 x 30	1200		
		18 x 20		18 x 20		18 x 25			
150	157	16 x 30	1360	16 x 30	1360	18 x 30	1500		
		18 x 25		18 x 25					
220	227	16 x 30	1400	18 x 30	1700				
		18 x 25							

Maximum Allowable Ripple Current (mArms) at 105˚C 100kHz

Case Size ΦD x L (mm)

Voltage (Code)		400V (2G)		450V (2W)	
Cap. (μF)	Code	Case Size	Ripple Current	Case Size	Ripple Current
1	105	8 x 12	38		
1.5	155	8 x 12	72		
		10 x 12.5	80		
1.8	185	8 x 12	76		
		10 x 12.5	96		
2.2	225	8 x 12	76		
		10 x 12.5	112		
3.3	335	10 x 12.5	120		
4.7	475	10 x 16	176	10 x 20	120
5.6	565	10 x 16	200	10 x 20	135
6.8	685	10 x 16	220	10 x 20	150
10	106	10 x 20	280	12.5 x 20	320
22	226	12.5 x 25	430	16 x 25	560
		16 x 20		18 x 20	
33	336	16 x 25	640	16 x 30	700
		18 x 20		18 x 25	
47	476	16 x 30	840	18 x 30	880
		18 x 25			
68	686	18 x 30	1000		

Maximum Allowable Ripple Current (mArms) at 105˚C 100kHz

Case Size ΦD x L (mm)

Specifications are subject to change without notice. Should a safety or technical concern arise regarding the product, please be sure to contact our sales offices or agents immediately.

SAMXON®
Aluminum Electrolytic Capacitors

Longer Life Assurance (較長壽命), High Ripple Current (高紋波)

FEATURES

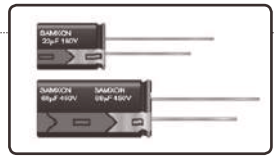

- High ripple current at high frequency, load life of 8,000~10,000 hours at 105˚C.
- For electronic ballast, power supply input circuit.

SPECIFICATIONS

Item	Performance Characteristics	
Operating Temperature Range	-40 to +105˚C	-25 to +105˚C
Rated Working Voltage Range	160 to 400V	450 to 500V
Nominal Capacitance Range	1 to 330μF	
Capacitance Tolerance	±20% at 120Hz, +20˚C	
Leakage Current	I ≤0.02CV +25 (μA) after 2 minutes application of rated working voltage at +20˚C	

tan δ (120Hz, +20˚C)

Working Voltage (V)	160	200	250	350	400	450	500
tan δ (max.)	0.15	0.15	0.15	0.20	0.20	0.20	0.20

Low Temperature Characteristics

Impedance ratio max. at 120Hz

Rated Voltage (V)	160	200	250	350	400	450	500
Z-25˚C / Z+20˚C	3	3	3	5	5	6	12

High Temperature Loading

Test time :

ΦD	8~10	12.5~18
Load life	8,000h	10,000h

Test temperature : +105˚C
Test conditions : Rated DC working voltage with rated ripple current

Post test requirements at +20˚C
Leakage current : ≤Initial specified value
Cap. change : within ±20% of the initial measured value
tan δ : ≤200% of the initial specified value

Shelf Life

At +105˚C no voltage applied after 1,000 hours and then being stabilized at +20˚C the capacitors shall meet the following limits
Leakage current : ≤Initial specified value
Cap. change : within ±20% of the initial measured value
tan δ : ≤200% of the initial specified value

Industrial Standard: JIS C - 5101-4 (IEC 60384-4)

CASE SIZE TABLE

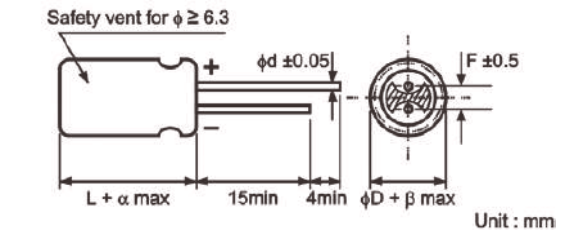

ΦD	8 (L <20)	8 (L ≥20)	10	12.5	16	18
F	3.5	3.5	5.0	5.0	7.5	7.5
Φd	0.5	0.6	0.6	0.6	0.8	0.8
α	(L <20) 1.5			(L ≥20) 2.0		
β	(D <20) 0.5			(D ≥20) 1.0		

RIPPLE CURRENT MULTIPLIER

Frequency Coefficient

Coefficient / Freq. (Hz) / Cap (μF)	120	1k	10k	100k
1~5.6	0.20	0.40	0.80	1.00
6.8~180	0.40	0.75	0.90	1.00
≥220	0.50	0.85	0.94	1.00

PART NUMBER SYSTEM (EXAMPLE : 350V 33μF)

1	2 3	4 5 6	7	8 9	10	11 12	13 14
E	RD	336	M	2V	K	20	RR

- Type (Radial Bulk)
- Case Length (20mm)
- Diameter (16mm)
- Voltage (350V)
- Tolerance (±20%)
- Capacitance (33μF)
- Series
- E-CAP

STANDARD RATINGS

Voltage (Code)		160V (2C)		200V (2D)		250V (2E)		350V (2V)	
Cap. (μF)	Code	Case Size	Ripple Current	Case Size	Ripple Current	Case Size	Ripple Current	Case Size	Ripple Current
10	106					10 x 16	342	10 x 20	350
22	226	10 x 20	500	10 x 16	544	10 x 16	508	12.5 x 20	480
				10 x 20	600	10 x 20	560		
33	336	10 x 20	580	10 x 20	650	12.5 x 20	710	16 x 20	640
						16 x 15	728		
47	476	10 x 20	750	10 x 20	697	12.5 x 20	834	16 x 25	800
						12.5 x 25	920		
				12.5 x 20	790	16 x 20	990	18 x 20	800
68	686	12.5 x 20	950	12.5 x 20	861	16 x 20	1000	16 x 30	1100
				12.5 x 25	950			18 x 20	910
				16 x 20	1000			18 x 25	1000
82	826	12.5 x 25	1060	16 x 20	1100	16 x 25	1200	18 x 25	1100
						18 x 20	1200		
100	107	12.5 x 25	1170	16 x 25	1300	16 x 25	1385	18 x 25	1110
						16 x 30	1500	18 x 30	1200
		16 x 20	1280	18 x 20	1280	18 x 25	1500		
150	157	16 x 25	1400	16 x 25	1400	18 x 25	1665		
		18 x 20	1400			18 x 30	1800		
220	227	16 x 30	1700	18 x 30	2000	18 x 40	2100		
		18 x 25	1500						
330	337	18 x 30	2000	18 x 40	2400				

Maximum Allowable Ripple Current (mArms) at 105˚C 100kHz

Case Size ΦD x L (mm)

Voltage (Code)		400V (2G)		450V (2W)		500V (2H)	
Cap. (μF)	Code	Case Size	Ripple Current	Case Size	Ripple Current	Case Size	Ripple Current
1	105	6.3 x 11	34				
		8 x 12	41				
1.5	155	8 x 12	77				
		10 x 12.5	86				
1.8	185	8 x 12	81				
		10 x 12.5	103				
2.2	225	8 x 12	81				
		10 x 12.5	120				
3.3	335	8 x 12	110				
		10 x 12.5	128				
4.7	475	8 x 12	146	10 x 20	128		
		10 x 16	188				
5.6	565	10 x 16	214	10 x 20	144		
6.8	685	10 x 12.5	207	10 x 20	160		
		10 x 16	230				
10	106	10 x 16	276	10 x 20	309	12.5 x 20	280
		10 x 20	300	12.5 x 20	350		
15	156	12.5 x 20	410	12.5 x 20	508	12.5 x 25	390
				12.5 x 25	560	16 x 20	390
22	226	12.5 x 20	450	12.5 x 20	590	16 x 25	500
		12.5 x 25	500	12.5 x 25	651	18 x 20	500
		16 x 20	600	16 x 20	680		
33	336	12.5 x 25	698	12.5 x 25	683	16 x 30	630
				16 x 25	785		
					975*		
		16 x 20	730	16 x 30	850	18 x 25	630
				18 x 25	850		
47	476	16 x 20	764	16 x 25	1250*	18 x 30	750
		16 x 25	840	16 x 30	936		
		18 x 20	840	18 x 30	1000		
68	686	18 x 25	1110	18 x 24	1450*	18 x 35	890
				18 x 25	1054		
		18 x 30	1200		1550*		
				18 x 30	1140		
82	826	18 x 25	1550			18 x 45	980
		18 x 40	1500				
120	127	18 x 35	2250*				

Maximum Allowable Ripple Current (mArms) at 105˚C 100kHz

Case Size ΦD x L (mm)

* Special item with higher ripple current.

Specifications are subject to change without notice. Should a safety or technical concern arise regarding the product, please be sure to contact our sales offices or agents immediately.

SAMXON®
Aluminum Electrolytic Capacitors

+105˚C, Longest Life Assurance (更長壽命), High Ripple Current (高紋波)

FEATURES

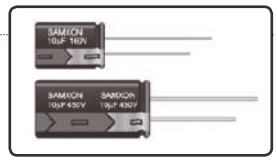

- High ripple current at high frequency, load life of 10,000~12,000 hours at 105˚C.
- For electronic ballast.

SPECIFICATIONS

Item	Performance Characteristics	
Operating Temperature Range	-40 to +105˚C	-25 to +105˚C
Rated Working Voltage Range	160 to 400V	450 to 500V
Nominal Capacitance Range	1 to 220μF	
Capacitance Tolerance	±20% at 120Hz, +20˚C	
Leakage Current	I ≤0.02CV +25 (μA) after 2 minutes application of rated working voltage at +20˚C	

tan δ (120Hz, +20˚C)

Working Voltage (V)	160	200	250	350	400	450	500
tan δ (max.)	0.15	0.15	0.15	0.20	0.20	0.20	0.20

Low Temperature Characteristics

Impedance ratio max. at 120Hz

Rated Voltage (V)	160	200	250	350	400	450	500
Z-25˚C / Z+20˚C	3	3	3	5	5	6	12

High Temperature Loading

Test time :

ΦD	8~10	12.5~18	500V
Load life	10,000h	12,000h	10,000h

Test temperature : +105˚C
Test conditions : Rated DC working voltage with rated ripple current

Post test requirements at +20˚C
Leakage current : ≤Initial specified value
Cap. change : within ±20% of the initial measured value
tan δ : ≤200% of the initial specified value

Shelf Life

At +105˚C no voltage applied after 1,000 hours and then being stabilized at +20˚C the capacitors shall meet the following limits
Leakage current : ≤Initial specified value
Cap. change : within ±20% of the initial measured value
tan δ : ≤200% of the initial specified value

Industrial Standard	JIS C - 5101-4 (IEC 60384-4)

CASE SIZE TABLE

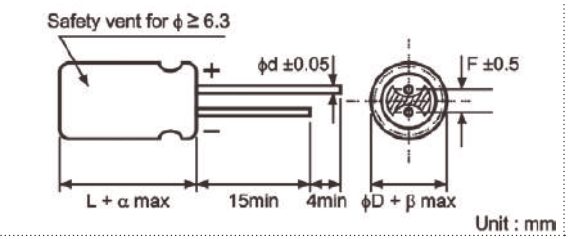

ΦD	8 (L <20)	8 (L ≥20)	10	12.5	16	18
F	3.5	3.5	5.0	5.0	7.5	7.5
Φd	0.5	0.6	0.6	0.6	0.8	0.8
α	(L <20) 1.5			(L ≥20) 2.0		
β	(D <20) 0.5			(D ≥20) 1.0		

RIPPLE CURRENT MULTIPLIER

Frequency Coefficient

Coefficient / Freq. (Hz) / Cap (μF)	120	1k	10k	100k
1~5.6	0.20	0.40	0.80	1.00
6.8~180	0.40	0.75	0.90	1.00
≥220	0.50	0.85	0.94	1.00

PART NUMBER SYSTEM (EXAMPLE : 160V 22μF)

1	2 3	4 5 6	7	8 9	10	11 12	13 14
E	R H	226	M	2C	G	20	RR

- 13 14: Type (Radial Bulk)
- 11 12: Case Length (20mm)
- 10: Diameter (10mm)
- 8 9: Voltage (160V)
- 7: Tolerance (±20%)
- 4 5 6: Capacitance (22μF)
- 2 3: Series
- 1: E-CAP

STANDARD RATINGS

Voltage (Code)		160V (2C)		200V (2D)		250V (2E)		350V (2V)	
Cap. (μF)	Code	Case Size	Ripple Current	Case Size	Ripple Current	Case Size	Ripple Current	Case Size	Ripple Current
6.8	685							10 x 16	220
10	106	10 x 16	250	10 x 16	250	10 x 20	300	10 x 20	280
22	226	10 x 20	500	10 x 20	500	12.5 x 20	600	12.5 x 25	350
33	336	10 x 20	565	12.5 x 20	600	12.5 x 20	630	16 x 20	600
47	476	12.5 x 20	725	12.5 x 20	780	12.5 x 25	720	16 x 25	700
						16 x 20	750	18 x 20	750
68	686	12.5 x 25	950	12.5 x 25	950	16 x 25	1000	16 x 30	1100
		16 x 20	970	16 x 20	970	18 x 20	920	18 x 25	875
100	107	16 x 25	1280	16 x 25	1280	16 x 30	1400		
		18 x 20	1180	18 x 20	1180	18 x 25	1345		
150	157	16 x 30	1360	16 x 30	1360	18 x 30	1500		
		18 x 25	1360	18 x 25	1360				
220	227	16 x 30	1400	18 x 30	1700				
		18 x 25	1400						

Maximum Allowable Ripple Current (mArms) at 105˚C 100kHz — Case Size ΦD x L (mm)

Voltage (Code)		400V (2G)		450V (2W)		500V (2H)	
Cap. (μF)	Code	Case Size	Ripple Current	Case Size	Ripple Current	Case Size	Ripple Current
1	105	8 x 12	38				
1.5	155	8 x 12	72				
		10 x 12.5	80				
1.8	185	8 x 12	76				
		10 x 12.5	96				
2.2	225	8 x 12	76				
		10 x 12.5	112				
3.3	335	10 x 12.5	120				
4.7	475	10 x 16	176	10 x 20	120		
5.6	565	10 x 16	200	10 x 20	135		
6.8	685	10 x 16	220	10 x 20	150		
10	106	10 x 20	280	12.5 x 20	320	12.5 x 20	240
15	156			16 x 25	560	12.5 x 25	300
				18 x 20	560	16 x 20	300
22	226	12.5 x 25	430	16 x 25	560	16 x 25	430
		16 x 20	600	18 x 20	560	18 x 20	430
33	336	16 x 25	640	16 x 30	700	16 x 30	540
		18 x 20	640	18 x 25	700	18 x 25	540
47	476	16 x 30	840	18 x 30	900	18 x 30	640
		18 x 25	840				
68	686	18 x 30	1000			18 x 35	750
82	826					18 x 45	800

Maximum Allowable Ripple Current (mArms) at 105˚C 100kHz — Case Size ΦD x L (mm)

Specifications are subject to change without notice. Should a safety or technical concern arise regarding the product, please be sure to contact our sales offices or agents immediately.

SAMXON®
Aluminum Electrolytic Capacitors

+125˚C, High Temperature (高溫度)

FEATURES

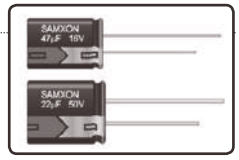

- Wide operating temperature range, it as long load life product at 125˚C.
- Suitable for use in DC or pulse circuits in various electronic and industrial.

SPECIFICATIONS

Item	Performance Characteristics
Operating Temperature Range	-40 to +125˚C
Rated Working Voltage Range	10 to 50V
Nominal Capacitance Range	3.3 to 3900μF
Capacitance Tolerance	±20% at 120Hz, +20˚C
Leakage Current	I ≤0.03CV or 4 (μA) whichever is greater measured after 1 minute application of rated working voltage at +20˚C
tan δ (120Hz, +20˚C)	Working Voltage (V): 10, 16, 25, 35, 50 tan δ (max.): 0.22, 0.18, 0.16, 0.14, 0.12 For capacitance value >1000μF, add 0.02 per another 1000μF
Low Temperature Characteristics	Impedance ratio max. at 120Hz Working Voltage (V): 10, 16, 25, 35, 50 Z-25˚C / Z+20˚C: 3, 2, 2, 2, 2 Z-40˚C / Z+20˚C: 6, 4, 4, 4, 4
High Temperature Loading	Test time : ΦD <8 ≥8; Load life 1,000h 2,000h Test temperature : +125˚C Test conditions : Rated DC working voltage with rated ripple current Post test requirements at +20 Leakage current : ≤Initial specified value Cap. change : within ±20% of the initial measured value tan δ : ≤200% of the initial specified value
Shelf Life	At +125˚C no voltage applied after 1,000 hours and then being stabilized at +20˚C the capacitors shall meet the following limits Leakage current : ≤Initial specified value Cap. change : within ±20% of the initial measured value tan δ : ≤200% of the initial specified value
Industrial Standard	JIS C - 5101-4 (IEC 60384-4)

CASE SIZE TABLE

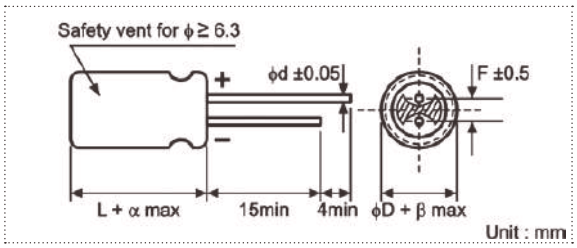

ΦD	5	6.3	8 (L <20)	8 (L ≥20)	10	12.5	16	18
F	2.0	2.5	3.5	3.5	5.0	5.0	7.5	7.5
Φd	0.5	0.5	0.5	0.6	0.6	0.6	0.8	0.8
α	(L <20) 1.5					(L ≥20) 2.0		
β	(D <20) 0.5					(D ≥20) 1.0		

RIPPLE CURRENT MULTIPLIER

Frequency Coefficient

Rated Voltage	Coefficient / Freq. (Hz) / Cap (μF)	50	120	300	1k	10k~100k
10~50V	≤47	0.75	1.00	1.35	1.57	2.00
	100~470	0.80	1.00	1.23	1.34	1.50
	≥560	0.85	1.00	1.10	1.13	1.15

PART NUMBER SYSTEM (EXAMPLE : 16V 330μF)

1	2 3	4 5 6	7	8 9	10	11 12	13 14
E	BD	337	M	1C	F	12	RR

- Type (Radial Bulk)
- Case Length (12mm)
- Diameter (8mm)
- Voltage (16V)
- Tolerance (±20%)
- Capacitance (330μF)
- Series
- E-CAP

STANDARD RATINGS

Voltage (Code)		10V (1A)		16V (1C)		25V (1E)		35V (1E)		50V (1H)	
Cap. (μF)	Code	Case Size	Ripple Current	Case Size	Ripple Current	Case Size	Ripple Current	Case Size	Ripple Current	Case Size	Ripple Current
3.3	335									5 x 11	21
4.7	475									5 x 11	26
10	106									5 x 11	38
22	226							5 x 11	47	5 x 11	55
33	336					5 x 11	53	5 x 11	56	6.3 x 11	81
47	476			5 x 11	56	5 x 11	59	6.3 x 11	84	6.3 x 11	93
100	107	5 x 11	74	5 x 11	88	6.3 x 11	111	6.3 x 11	118	8 x 12	160
220	227	6.3 x 11	135	6.3 x 11	149	8 x 12	200	10 x 12.5	240		
330	337	6.3 x 11	167	8 x 12	221	8 x 12	238				
470	477	8 x 12	237	8 x 12	256	10 x 16	366				
1000	108					10 x 20	575				
2200	228					12.5 x 25	908				
3900	398					16 x 30	1356				

Maximum Allowable Ripple Current (mArms) at 125˚C 120Hz

Case Size ΦD x L (mm)

Specifications are subject to change without notice. Should a safety or technical concern arise regarding the product, please be sure to contact our sales offices or agents immediately.

SAMXON®

Aluminum Electrolytic Capacitors

+130˚C, High Temperature (高溫度), High Ripple Current (高紋波)

FEATURES

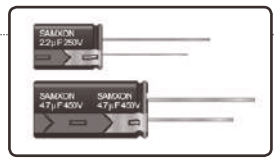

- High temperature, high ripple current at high frequency, load life of 1,000~4,000 hours at 130˚C.
- Specially designed for electronic ballast and energy saving lamp.

SPECIFICATIONS

Item	Performance Characteristics	
Operating Temperature Range	-40 to +130˚C	-25 to +130˚C
Rated Working Voltage Range	10 to 100V	200 to 450V
Nominal Capacitance Range	1 to 4700μF	
Capacitance Tolerance	±20% at 120Hz, +20˚C	
Leakage Current	I ≤0.01CV or 3 (μA) whichever is greater measured after 2 minutes application of rated working voltage at +20˚C	I ≤0.02CV +25 (μA) after 2 minutes application of rated working voltage at +20˚C

tan δ (120Hz, +20˚C)

Working Voltage (V)	10	16	25	35	50	63	100	200	250	350	400	450
tan δ (max.)	0.20	0.16	0.14	0.12	0.10	0.09	0.15	0.15	0.15	0.20	0.20	0.20

For capacitance ＞1000μF, add 0.02 per another 1000μF

Low Temperature Characteristics

Impedance ratio max. at 120Hz

Working Voltage (V)	10	16	25	35	50	63	100	200	250	350	400	450
Z-25˚C / Z+20˚C	3	2	2	2	2	2	2	3	3	5	6	6
Z-40˚C / Z+20˚C	6	4	3	3	3	3	3	–	–	–	–	–

High Temperature Loading

Test time :

ΦD	6.3	8-10	≥12.5
Load life	1,000h	2,000h	4,000h

Test temperature : +130˚C
Test conditions : Rated DC working voltage with rated ripple current

Post test requirements at +20˚C
Leakage current : ≤Initial specified value
Cap. change : within ±30% of the initial measured value
tan δ : ≤300% of the initial specified value (200~450V within 200%)

Shelf Life

At +105˚C no voltage applied after 1,000 hours and then being stabilized at +20˚C the capacitors shall meet the following limits

Leakage current : ≤Initial specified value
Cap. change : within ±30% of the initial measured value
tan δ : ≤300% of the initial specified value (200~450V within 200%)

Industrial Standard	JIS C - 5101-4 (IEC 60384-4)

CASE SIZE TABLE

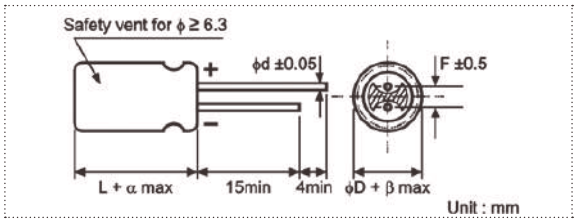

ΦD	6.3	8(L<20)	8(L≥20)	10	12.5	16	18
F	2.5	3.5	3.5	5.0	5.0	7.5	7.5
Φd	0.5	0.5	0.6	0.6	0.6	0.8	0.8
α	(L <20) 1.5			(L ≥20) 2.0			
β	(D <20) 0.5			(D ≥20) 1.0			

RIPPLE CURRENT MULTIPLIER

Frequency Coefficient

Rated Voltage	Coefficient / Freq. (Hz) / Cap (μF)	120	1k	10k	100k
10~100V	4.7	0.42	0.60	0.80	1.00
	10~33	0.55	0.75	0.90	1.00
	47~330	0.70	0.85	0.95	1.00
	470~1500	0.75	0.90	0.98	1.00
	2200~4700	0.80	0.95	1.00	1.00
200~450V	1~5.6	0.20	0.40	0.80	1.00
	6.8~15	0.30	0.60	0.90	1.00
	22~33	0.50	0.80	0.90	1.00

PART NUMBER SYSTEM (EXAMPLE : 16V 1000μF)

1	2 3	4 5 6	7	8 9	10	11 12	13 14
E	RA	108	M	1C	G	20	RR

- Type (Radial Bulk)
- Case Length (20mm)
- Diameter (10mm)
- Voltage (16V)
- Tolerance (±20%)
- Capacitance (1000μF)
- Series
- E-CAP

STANDARD RATINGS

Voltage (Code)		10V (1A)			16V (1C)		
Cap. (μF)	Code	Case Size	Impedance	Ripple Current	Case Size	Impedance	Ripple Current
330	337	8 x 12	0.220	360	8 x 12	0.220	360
470	477	10 x 12.5	0.150	620	10 x 12.5	0.150	620
1000	108	10 x 20	0.073	960	10 x 20	0.073	960
2200	228	12.5 x 25	0.040	1430	12.5 x 25	0.040	1430
3300	338	16 x 25	0.038	1900	16 x 30	0.034	2300
4700	478	16 x 30	0.034	2300	16 x 35	0.031	2550

Maximum Allowable Ripple Current (mArms) at 130˚C 100kHz
Maximum Impedance (Ω) at 20˚C 100kHz
Case Size ΦD x L (mm)

Voltage (Code)		25V (1E)			35V (1V)		
Cap. (μF)	Code	Case Size	Impedance	Ripple Current	Case Size	Impedance	Ripple Current
100	107				8 x 12	0.220	360
220	227	8 x 12	0.220	360	10 x 12.5	0.150	620
330	337	10 x 12.5	0.150	620	10 x 16	0.100	800
470	477	10 x 16	0.100	800	10 x 20	0.073	960
1000	108	12.5 x 20	0.055	1100	12.5 x 25	0.040	1430
2200	228	16 x 30	0.034	2300	16 x 35	0.031	2550
3300	338	16 x 35	0.031	2550	18 x 35	0.028	2800

Maximum Allowable Ripple Current (mArms) at 130˚C 100kHz
Maximum Impedance (Ω) at 20˚C 100kHz
Case Size ΦD x L (mm)

Voltage (Code)		50V (1H)			63V (1J)			100V (2A)		
Cap. (μF)	Code	Case Size	Impedance	Ripple Current	Case Size	Impedance	Ripple Current	Case Size	Impedance	Ripple Current
4.7	475	8 x 12	0.850	100				8 x 12	1.300	100
10	106	8 x 12	0.600	200				8 x 12	1.000	200
22	226	8 x 12	0.350	260				8 x 12	0.670	220
33	336	8 x 12	0.280	300	8 x 12	0.400	250	10 x 12.5	0.450	260
47	476	8 x 12	0.280	300	10 x 12.5	0.270	400	10 x 16	0.330	330
100	107	10 x 12.5	0.180	520	10 x 16	0.200	450	12.5 x 20	0.170	670
220	227	10 x 20	0.082	890	12.5 x 20	0.100	820	16 x 25	0.130	1100
330	337	12.5 x 20	0.065	1000	12.5 x 25	0.072	1000	16 x 30	0.100	1300
470	477	12.5 x 25	0.051	1200	16 x 25	0.069	1500	18 x 30	0.092	1600
1000	108	16 x 30	0.037	2180	16 x 30	0.056	1850			
1500	158				18 x 40	0.043	2350			
2200	228	18 x 40	0.029	2800						

Maximum Allowable Ripple Current (mArms) at 130˚C 100kHz
Maximum Impedance (Ω) at 20˚C 100kHz
Case Size ΦD x L (mm)

Specifications are subject to change without notice. Should a safety or technical concern arise regarding the product, please be sure to contact our sales offices or agents immediately.

SAMXON®
Aluminum Electrolytic Capacitors

+130˚C, High Temperature (高溫度), High Ripple Current (高紋波)

STANDARD RATINGS

Voltage (Code)		200V (2D)		250V (2E)	
Cap. (μF)	Code	Case Size	Ripple Current	Case Size	Ripple Current
4.7	475	6.3 x 11	100	8 x 12	120
		8 x 12	120		
5.6	565	8 x 12	130	8 x 16	180
		8 x 16	180		
6.8	685	8 x 12	130	8 x 16	180
		8 x 16	180		
8.2	825	10 x 16	200	10 x 16	200
10	106	8 x 16	200	8 x 20	240
		8 x 20	240		
15	156	8 x 16	200	10 x 16	240
		8 x 20	240		
22	226	8 x 20	300	10 x 20	260
		10 x 16	240		
33	336	10 x 20	320	12.5 x 20	350

Maximum Allowable Ripple Current (mArms) at 130˚C 100kHz

Case Size ΦD x L (mm)

Voltage (Code)		350V (2V)		400V (2G)		450V (2W)	
Cap. (μF)	Code	Case Size	Ripple Current	Case Size	Ripple Current	Case Size	Ripple Current
1	105	6.3 x 11	60	6.3 x 11	60	8 x 12	59
		8 x 12	65	8 x 12	65		
1.5	155	8 x 12	75	8 x 12	75	8 x 12	68
		8 x 16	80	8 x 16	80		
1.8	185	8 x 12	75	8 x 12	75	8 x 12	68
		8 x 16	85	8 x 16	85		
2.2	225	8 x 12	75	8 x 12	75	8 x 12	68
		8 x 16	90	8 x 16	90		
		8 x 20	110	8 x 20	110		
2.7	275	8 x 16	95	8 x 16	95	8 x 16	88
		8 x 20	115	8 x 20	115		
3.3	335	8 x 16	100	8 x 16	100	8 x 16	90
		8 x 20	120	8 x 20	120		
4.7	475	8 x 20	120	8 x 20	120	10 x 16	112
		10 x 16	125	10 x 16	125		
5.6	565	10 x 16	130	10 x 16	130	10 x 16	115
		10 x 20	145	10 x 20	145		
6.8	685	10 x 20	150	10 x 20	150	10 x 20	135
8.2	825	10 x 20	168	10 x 20	168	10 x 20	150
10	106	12.5 x 20	186	12.5 x 20	186	12.5 x 20	170
15	156	12.5 x 25	226	12.5 x 25	226	12.5 x 25	200
22	226	16 x 25	283	16 x 25	283		
33	336	16 x 30	375	16 x 30	375		

Maximum Allowable Ripple Current (mArms) at 130˚C 100kHz

Case Size ΦD x L (mm)

Specifications are subject to change without notice. Should a safety or technical concern arise regarding the product, please be sure to contact our sales offices or agents immediately.

+130˚C, High Temperature (高溫度), High Ripple Current (高紋波), Long Life Assurance (長壽命)

FEATURES

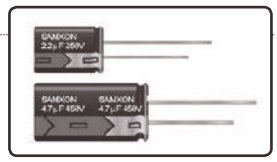

- High temperature, high ripple current at high frequency, load life of 3,000~4,000 hours at 130˚C.
- Specially designed for electronic ballast and energy saving lamp.

SPECIFICATIONS

Item	Performance Characteristics
Operating Temperature Range	-40 to +130˚C ; -25 to +130˚C
Rated Working Voltage Range	160 to 400V ; 450V
Nominal Capacitance Range	1.5 to 100μF
Capacitance Tolerance	±20% at 120Hz, +20˚C
Leakage Current	I ≤0.02CV +25 (μA) after 2 minutes application of rated working voltage at +20˚C
tan δ (120Hz, +20˚C)	Working Voltage (V): 160, 200, 250, 350, 400, 450 tan δ (max.): 0.15, 0.15, 0.15, 0.20, 0.20, 0.20
Low Temperature Characteristics	Impedance ratio max. at 120Hz Rated Voltage (V): 160, 200, 250, 350, 400, 450 Z-25˚C / Z+20˚C: 3, 3, 3, 5, 5, 6
High Temperature Loading	Test time : ΦD ≤12.5 >12.5; Load life 3,000h 4,000h Test temperature : +130˚C Test conditions : Rated DC working voltage with rated ripple current Post test requirements at +20˚C Leakage current : ≤Initial specified value Cap. change : within ±30% of the initial measured value tan δ : ≤300% of the initial specified value
Shelf Life	At +105˚C no voltage applied after 1,000 hours and then being stabilized at +20˚C the capacitors shall meet the following limits Leakage current : ≤Initial specified value Cap. change : within ±30% of the initial measured value tan δ : ≤300% of the initial specified value
Industrial Standard	JIS C - 5101-4 (IEC 60384-4)

CASE SIZE TABLE

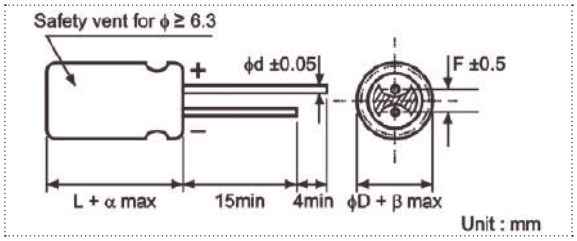

ΦD	8 (L <20)	8 (L ≥20)	10	12.5	16	18
F	3.5	3.5	5.0	5.0	7.5	7.5
Φd	0.5	0.6	0.6	0.6	0.8	0.8
α	(L <20) 1.5			(L ≥20) 2.0		
β	(D <20) 0.5			(D ≥20) 1.0		

RIPPLE CURRENT MULTIPLIER

Frequency Coefficient

Coefficient / Freq. (Hz) / Cap (μF)	120	1k	10k	100k
1.5~5.6	0.20	0.40	0.80	1.00
6.8~100	0.40	0.75	0.90	1.00

PART NUMBER SYSTEM (EXAMPLE : 200V 100μF)

1	2 3	4 5 6	7	8 9	10	11 12	13 14
E	RB	107	M	2D	K	35	RR

- 13 14: Type (Radial Bulk)
- 11 12: Case Length (35mm)
- 10: Diameter (16mm)
- 8 9: Voltage (200V)
- 7: Tolerance (±20%)
- 4 5 6: Capacitance (100μF)
- 2 3: Series
- 1: E-CAP

STANDARD RATINGS

Voltage (Code)		160V (2C)		200V (2D)		250V (2E)		350V (2V)	
Cap. (μF)	Code	Case Size	Ripple Current	Case Size	Ripple Current	Case Size	Ripple Current	Case Size	Ripple Current
1.8	185							10 x 16	62
2.2	225							10 x 16	70
2.8	285							10 x 16	76
3.3	335							10 x 16	84
4.7	475					10 x 16	88	10 x 20	105
5.6	565					10 x 16	88	12.5 x 20	121
6.8	685					10 x 16	96	12.5 x 20	176
8.2	825	10 x 16	96	10 x 16	100	10 x 16	104	12.5 x 20	192
10	106	10 x 16	200	10 x 16	200	10 x 16	224	12.5 x 20	224
15	156	10 x 16	336	10 x 20	336	12.5 x 20	360	12.5 x 25	240
22	226	10 x 20	400	12.5 x 20	400	12.5 x 20	480	16 x 25	252
33	336	12.5 x 20	400	12.5 x 20	480	12.5 x 25	480		
47	476	12.5 x 25	528	12.5 x 25	528	16 x 25	518		
68	686	16 x 25	547	16 x 25	547				
100	107	16 x 25	806						

Maximum Allowable Ripple Current (mArms) at 130˚C 100kHz

Case Size ΦD x L (mm)

Voltage (Code)		400V (2G)		450V (2W)	
Cap. (μF)	Code	Case Size	Ripple Current	Case Size	Ripple Current
1.5	155			10 x 16	70
1.8	185	10 x 16	72	10 x 16	74
2.2	225	10 x 16	74	10 x 16	77
2.8	285	10 x 16	80	10 x 16	80
3.3	335	10 x 16	88	10 x 16	88
4.7	475	10 x 20	104	10 x 20	104
5.6	565	12.5 x 20	112	12.5 x 20	112
6.8	685	12.5 x 20	176	12.5 x 20	120
8.2	825	12.5 x 20	208	12.5 x 20	224
10	106	12.5 x 20	224	12.5 x 20	256
15	156	12.5 x 25	256	12.5 x 25	336

Maximum Allowable Ripple Current (mArms) at 130˚C 100kHz

Case Size ΦD x L (mm)

Specifications are subject to change without notice. Should a safety or technical concern arise regarding the product, please be sure to contact our sales offices or agents immediately.

+130˚C, High Temperature (高溫度), High Ripple Current (高紋波), Longer Life Assurance (較長壽命)

FEATURES

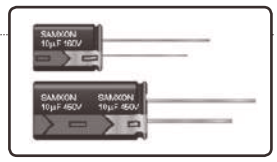

- High temperature, high ripple current at high frequency, load life of 5,000~6,000 hours at 130˚C.
- Specially designed for electronic ballast and energy saving lamp.

SPECIFICATIONS

Item	Performance Characteristics
Operating Temperature Range	-25 to +130˚C
Rated Working Voltage Range	160 to 450V
Nominal Capacitance Range	1.5 to 100μF
Capacitance Tolerance	±20% at 120Hz, +20˚C
Leakage Current	I ≤0.02CV +25 (μA) after 2 minutes application of rated working voltage at +20˚C

tan δ (120Hz, +20˚C)

Working Voltage (V)	160	200	250	350	400	450
tan δ (max.)	0.15	0.15	0.15	0.20	0.20	0.20

Low Temperature Characteristics

Impedance ratio max. at 120Hz

Rated Voltage (V)	160	200	250	350	400	450
Z-25˚C / Z+20˚C	3	3	3	5	5	6

High Temperature Loading

Test time :

ΦD	≤12.5	>12.5
Load life	5,000h	6,000h

Test temperature : +130˚C

Test conditions : Rated DC working voltage with rated ripple current

Post test requirements at +20˚C

Leakage current : ≤Initial specified value

Cap. change : within ±30% of the initial measured value

tan δ : ≤200% of the initial specified value

Shelf Life

At +105˚C no voltage applied after 1,000 hours and then being stabilized at +20˚C the capacitors shall meet the following limits

Leakage current : ≤Initial specified value

Cap. change : within ±30% of the initial measured value

tan δ : ≤200% of the initial specified value

Industrial Standard	JIS C - 5101-4 (IEC 60384-4)

CASE SIZE TABLE

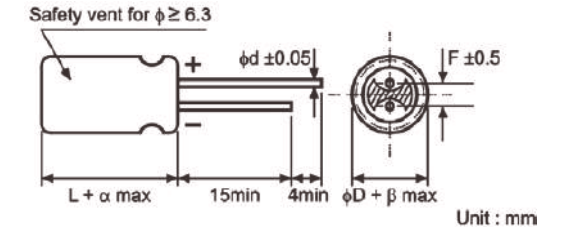

ΦD	10	12.5	16
F	5.0	5.0	7.5
Φd	0.6	0.6	0.8
α	(L <20) 1.5	(L ≥20) 2.0	
β	(D <20) 0.5	(D ≥20) 1.0	

RIPPLE CURRENT MULTIPLIER

Frequency Coefficient

Coefficient / Freq. (Hz) / Cap (μF)	120	1k	10k	100k
1.5~5.6	0.20	0.40	0.80	1.00
6.8~100	0.40	0.75	0.90	1.00

PART NUMBER SYSTEM (EXAMPLE : 250V 10μF)

1	2 3	4 5 6	7	8 9	10	11 12	13 14
E	RC	106	M	2E	G	16	RR

- Type (Radial Bulk)
- Case Length (16mm)
- Diameter (10mm)
- Voltage (250V)
- Tolerance (±20%)
- Capacitance (10μF)
- Series
- E-CAP

STANDARD RATINGS

Voltage (Code)		160V (2C)		200V (2D)		250V (2E)		350V (2V)	
Cap. (μF)	Code	Case Size	Ripple Current	Case Size	Ripple Current	Case Size	Ripple Current	Case Size	Ripple Current
2.2	225							10 x 16	50
3.3	335							10 x 16	58
4.7	475					10 x 16	56	10 x 20	70
5.6	565					10 x 16	60	12.5 x 20	85
6.8	685					10 x 16	65	12.5 x 20	120
8.2	825	10 x 16	65	10 x 16	70	10 x 16	70	12.5 x 20	135
10	106	10 x 16	140	10 x 16	140	10 x 16	155	12.5 x 20	155
15	156	10 x 16	235	10 x 20	235	12.5 x 20	250	12.5 x 25	168
22	226	10 x 20	280	12.5 x 20	280	12.5 x 20	335	16 x 25	175
33	336	12.5 x 20	290	12.5 x 20	335	12.5 x 25	335		
47	476	12.5 x 25	365	12.5 x 25	365	16 x 25	360		
68	686	16 x 25	380	16 x 25	380				
100	107	16 x 25	565						

Maximum Allowable Ripple Current (mArms) at 130˚C 100kHz

Case Size ΦD x L (mm)

Voltage (Code)		400V (2G)		450V (2W)	
Cap. (μF)	Code	Case Size	Ripple Current	Case Size	Ripple Current
1.5	155			10 x 16	50
1.8	185	10 x 16	50	10 x 16	52
2.2	225	10 x 16	52	10 x 16	54
2.8	285	10 x 16	56	10 x 16	56
3.3	335	10 x 16	62	10 x 16	62
4.7	475	10 x 20	72	10 x 20	72
5.6	565	12.5 x 20	78	12.5 x 20	78
6.8	685	12.5 x 20	120	12.5 x 20	84
8.2	825	12.5 x 20	145	12.5 x 20	156
10	106	12.5 x 20	155	12.5 x 20	179
15	156	12.5 x 25	180	12.5 x 25	235

Maximum Allowable Ripple Current (mArms) at 130˚C 100kHz

Case Size ΦD x L (mm))

Specifications are subject to change without notice. Should a safety or technical concern arise regarding the product, please be sure to contact our sales offices or agents immediately.

FEATURES

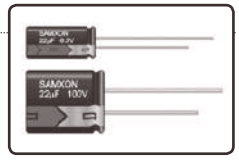

- Standard, for audio equipment.
- Low distortion ratio ensured with anti-vibration structures.

SPECIFICATIONS

Item	Performance Characteristics
Operating Temperature Range	-40 to +85˚C
Rated Working Voltage Range	6.3 to 100V
Nominal Capacitance Range	2.2 to 10000μF
Capacitance Tolerance	±20% at 120Hz, +20˚C
Leakage Current	I ≤0.01CV or 3 (μA) whichever is greater measured after 2 minutes application of rated working voltage at +20˚C
tan δ (120Hz, +20˚C)	Working Voltage (V): 6.3, 10, 16, 25, 35, 50, 63, 100 tan δ (max.): 0.22, 0.19, 0.16, 0.14, 0.12, 0.10, 0.09, 0.08 For capacitance value >1000μF, add 0.02 per another 1000μF
Low Temperature Characteristics	Impedance ratio max. at 120Hz Working Voltage (V): 6.3, 10, 16, 25, 35, 50, 63, 100 Z-25˚C / Z+20˚C: 4, 3, 2, 2, 2, 2, 2, 2 Z-40˚C / Z+20˚C: 8, 6, 4, 4, 3, 3, 3, 3
High Temperature Loading	Test time : 1,000 hours Test temperature : +85˚C Test conditions : Rated DC working voltage with rated ripple current Post test requirements at +20˚C Leakage current : ≤Initial specified value Cap. change : within ±20% of the initial measured value tan δ : ≤150% of the initial specified value
Shelf Life	At +85˚C no voltage applied after 1,000 hours and then being stabilized at +20˚C the capacitors shall meet the following limits Leakage current : ≤Initial specified value Cap. change : within ±20% of the initial measured value tan δ : ≤150% of the initial specified value
Industrial Standard	JIS C - 5101-4 (IEC 60384-4)

CASE SIZE TABLE

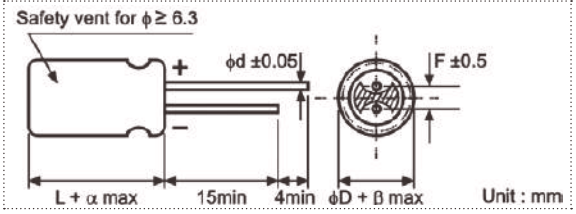

ΦD	5	6.3	8 (L <20)	8 (L ≥20)	10	12.5	16	18
F	2.0	2.5	3.5	3.5	5.0	5.0	7.5	7.5
Φd	0.5	0.5	0.5	0.6	0.6	0.6	0.8	0.8
α	(L <20) 1.5					(L ≥20) 2.0		
β	(D <20) 0.5					(D ≥20) 1.0		

RIPPLE CURRENT MULTIPLIER

Frequency Coefficient

Coefficient / Freq. (Hz) / Cap (μF)	50	120	300	1k	10k~
≤47	0.75	1.00	1.35	1.57	2.00
68~470	0.80	1.00	1.23	1.34	1.50
≥560	0.85	1.00	1.10	1.13	1.15

PART NUMBER SYSTEM (EXAMPLE : 25V 220μF)

1	2 3	4 5 6	7	8 9	10	11 12	13 14
E	FA	227	M	1E	G	16	RR

- RR — Type (Radial Bulk)
- 16 — Case Length (16mm)
- G — Diameter (10mm)
- 1E — Voltage (25V)
- M — Tolerance (±20%)
- 227 — Capacitance (220μF)
- FA — Series
- E — E-CAP

STANDARD RATINGS

Voltage (Code)		6.3V (0J)		10V (1A)		16V (1C)		25V (1E)	
Cap. (μF)	Code	Case Size	Ripple Current	Case Size	Ripple Current	Case Size	Ripple Current	Case Size	Ripple Current
4.7	475							5 x 11	22
10	106					5 x 11	31	5 x 11	32
22	226	5 x 11	36	5 x 11	41	5 x 11	46	5 x 11	50
33	336	5 x 11	46	5 x 11	51	5 x 11	57	6.3 x 11	70
47	476	5 x 11	55	5 x 11	60	6.3 x 11	74	6.3 x 11	85
100	107	6.3 x 11	88	6.3 x 11	99	8 x 12	128	8 x 12	140
220	227	8 x 12	155	8 x 12	170	10 x 12.5	226	10 x 16	260
330	337	10 x 12.5	226	10 x 12.5	247	10 x 16	309	10 x 20	351
470	477	10 x 12.5	270	10 x 16	330	10 x 20	406	12.5 x 20	476
1000	108	10 x 20	485	12.5 x 20	601	12.5 x 25	723	16 x 25	854
2200	228	12.5 x 25	867	16 x 25	1047	16 x 25	1209	16 x 35	1570
3300	338	16 x 25	1135	16 x 30	1520	16 x 25	1720	18 x 40	1794
4700	478	16 x 30	1431	16 x 35	1840	18 x 35	2140		
6800	688	18 x 35	1810	18 x 40	2049				
10000	109	18 x 40	2100						

Maximum Allowable Ripple Current (mArms) at 85˚C 120Hz

Case Size ΦD x L (mm)

Voltage (Code)		35V (1V)		50V (1H)		63V (1J)		100V (2A)	
Cap. (μF)	Code	Case Size	Ripple Current	Case Size	Ripple Current	Case Size	Ripple Current	Case Size	Ripple Current
2.2	225			5 x 11	18			5 x 11	22
3.3	335			5 x 11	22			5 x 11	27
4.7	475	5 x 11	24	5 x 11	27			5 x 11	36
10	106	5 x 11	36	5 x 11	39	6.3 x 11	50	8 x 12	65
22	226	6.3 x 11	60	6.3 x 11	65	8 x 12	85	10 x 12.5	110
33	336	6.3 x 11	75	8 x 12	93	8 x 12	105	10 x 16	150
47	476	8 x 12	101	8 x 12	111	10 x 12.5	140	10 x 20	190
100	107	10 x 12.5	176	10 x 16	215	10 x 20	255	12.5 x 20	300
220	227	10 x 20	320	12.5 x 20	390	12.5 x 20	420	16 x 25	549
330	337	12.5 x 20	446	12.5 x 20	488	12.5 x 25	541	16 x 30	734
470	477	12.5 x 25	590	16 x 25	650	16 x 25	840	18 x 35	980
1000	108	16 x 25	1060	16 x 30	1143	18 x 35	1400		
2200	228	18 x 35	1840						

Maximum Allowable Ripple Current (mArms) at 85˚C 120Hz

Case Size ΦD x L (mm)

Specifications are subject to change without notice. Should a safety or technical concern arise regarding the product, please be sure to contact our sales offices or agents immediately.

FEATURES

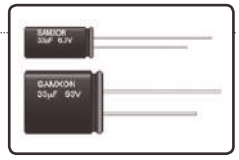

- Standard non-polarized series for entertainment electronics.

SPECIFICATIONS

Item	Performance Characteristics
Operating Temperature Range	-40 to +85˚C
Rated Working Voltage Range	6.3 to 100V
Nominal Capacitance Range	2.2 to 6800μF
Capacitance Tolerance	±20% at 120Hz, +20˚C
Leakage Current	I ≤0.03CV or 3 (μA) whichever is greater measured after 5 minutes application of rated working voltage at +20˚C
tan δ (120Hz, +20˚C)	Working Voltage (V): 6.3, 10, 16, 25, 35, 50, 63, 100 Tan δ (max.): 0.26, 0.24, 0.22, 0.20, 0.16, 0.14, 0.12, 0.10 For capacitance value >1000μF, add 0.02 per another 1000μF
Low Temperature Characteristics	Impedance ratio max. at 120Hz Working Voltage (V): 6.3, 10, 16, 25, 35, 50, 63, 100 Z-25˚C / Z+20˚C: 4, 3, 2, 2, 2, 2, 2, 2 Z-40˚C / Z+20˚C: 10, 8, 6, 5, 4, 4, 3, 3
High Temperature Loading	Test time : 1,000 hours Test temperature : +85˚C Test conditions : Rated DC working voltage to each polarity every 250 hours Post test requirements at +20˚C Leakage current : ≤Initial specified value Cap. change : within ±20% of the initial measured value tan δ : ≤200% of the initial specified value
Shelf Life	At +85˚C no voltage applied after 1,000 hours and then being stabilized at +20˚C the capacitors shall meet the following limits Leakage current : ≤Initial specified value Cap. change : within ±20% of the initial measured value tan δ : ≤200% of the initial specified value
Industrial Standard	JIS C - 5101-4 (IEC 60384-4)

CASE SIZE TABLE

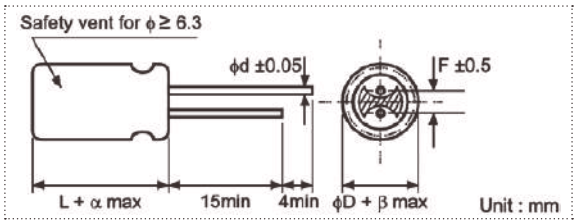

ΦD	5	6.3	8 (L <20)	8 (L ≥20)	10	12.5	16	18
F	2.0	2.5	3.5	3.5	5.0	5.0	7.5	7.5
Φd	0.5	0.5	0.5	0.6	0.6	0.6	0.8	0.8
α	(L <20) 1.5					(L ≥20) 2.0		
β	(D <20) 0.5					(D ≥20) 1.0		

RIPPLE CURRENT MULTIPLIER

Frequency Coefficient

Coefficient / Freq. (Hz) / Cap (μF)	50	120	300	1k	10k~
≤47	0.75	1.00	1.35	1.57	2.00
68~470	0.80	1.00	1.23	1.34	1.50
≥560	0.85	1.00	1.10	1.13	1.15

PART NUMBER SYSTEM (EXAMPLE : 16V 100μF)

1	2 3	4 5 6	7	8 9	10	11 12	13 14
E	NP	107	M	1C	F	12	RR

- 13 14: Type (Radial Bulk)
- 11 12: Case Length (12mm)
- 10: Diameter (8mm)
- 8 9: Voltage (16V)
- 7: Tolerance (±20%)
- 4 5 6: Capacitance (100μF)
- 2 3: Series
- 1: E-CAP

SAMXON®
Aluminum Electrolytic Capacitors

+85˚C, Non-polar (無極性)

STANDARD RATINGS

Voltage (Code)		6.3V (0J)		10V (1A)		16V (1C)		25V (1E)	
Cap. (μF)	Code	Case Size	Ripple Current	Case Size	Ripple Current	Case Size	Ripple Current	Case Size	Ripple Current
4.7	475							5 x 11	26
10	106					5 x 11	42	5 x 11	42
22	226			5 x 11	57	5 x 11	57	6.3 x 11	65
33	336	5 x 11	64	5 x 11	64	5 x 11	70	6.3 x 11	80
47	476	5 x 11	76	5 x 11	76	6.3 x 11	95	6.3 x 11	95
100	107	6.3 x 11	125	6.3 x 11	125	8 x 12	160	8 x 12	160
220	227	8 x 12	215	8 x 12	215	10 x 12.5	275	10 x 16	305
330	337	8 x 12	265	10 x 16	345	10 x 16	375	12.5 x 20	450
470	477	10 x 12.5	370	10 x 16	410	10 x 20	485	12.5 x 20	540
1000	108	10 x 20	650	12.5 x 20	720	12.5 x 25	855	16 x 25	950
2200	228	12.5 x 25	1160	16 x 25	1280	16 x 30	1510	18 x 35	1620
3300	338	16 x 25	1570	16 x 30	1690	18 x 35	1980		
4700	478	16 x 30	2020	18 x 35	2160				
6800	688	18 x 35	2600						

Maximum Allowable Ripple Current (mArms) at 85˚C 120Hz

Case Size ΦD x L (mm)

Voltage (Code)		35V (1V)		50V (1H)		63V (1J)		100V (2A)	
Cap. (μF)	Code	Case Size	Ripple Current	Case Size	Ripple Current	Case Size	Ripple Current	Case Size	Ripple Current
2.2	225			5 x 11	25			6.3 x 11	34
3.3	335			5 x 11	27	5 x 11	28	6.3 x 11	39
4.7	475	5 x 11	34	5 x 11	34	6.3 x 11	34	6.3 x 11	47
10	106	5 x 11	43	6.3 x 11	52	6.3 x 11	57	8 x 12	71
22	226	6.3 x 11	73	8 x 12	89	8 x 12	95	10 x 16	135
33	336	8 x 12	100	8 x 12	105	10 x 12.5	135	12.5 x 20	220
47	476	8 x 12	120	10 x 12.5	150	10 x 16	180	12.5 x 20	240
68	686			10 x 16	198				
100	107	10 x 16	230	10 x 20	265	12.5 x 20	320	16 x 25	425
220	227	12.5 x 20	410	12.5 x 25	480	16 x 25	575	18 x 35	720
330	337	12.5 x 20	505	16 x 25	650	16 x 30	655		
470	477	12.5 x 25	655	16 x 30	835	18 x 35	965		
1000	108	16 x 30	1140						

Maximum Allowable Ripple Current (mArms) at 85˚C 120Hz

Case Size ΦD x L (mm)

Specifications are subject to change without notice. Should a safety or technical concern arise regarding the product, please be sure to contact our sales offices or agents immediately.

FEATURES

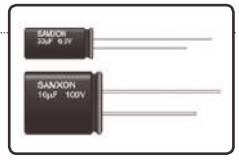

- Nonpolar, high temperature.
- Suitable for use in polarity and change circuits.

SPECIFICATIONS

Item	Performance Characteristics
Operating Temperature Range	-40 to +105˚C
Rated Working Voltage Range	6.3 to 100V
Nominal Capacitance Range	2.2 to 1000μF
Capacitance Tolerance	±20% at 120Hz, +20˚C
Leakage Current	I ≤0.03CV or 3 (μA) whichever is greater measured after 5 minutes application of rated working voltage at +20˚C
tan δ (120Hz, +20˚C)	Working Voltage (V): 6.3, 10, 16, 25, 35, 50, 63, 100 tan δ (max.): 0.26, 0.24, 0.22, 0.20, 0.16, 0.14, 0.12, 0.10
Low Temperature Characteristics	Impedance ratio max. at 120Hz Working Voltage (V): 6.3, 10, 16, 25, 35, 50, 63, 100 Z-25˚C / Z+20˚C: 4, 3, 2, 2, 2, 2, 2, 2 Z-40˚C / Z+20˚C: 8, 6, 4, 4, 3, 3, 3, 3
High Temperature Loading	Test time : 1,000 hours Test temperature : +105˚C Test conditions : Rated DC working voltage to each polarity every 250 hours Post test requirements at +20˚C Leakage current : ≤Initial specified value Cap. change : within ±20% of the initial measured value tan δ : ≤200% of the initial specified value
Shelf Life	At +105˚C no voltage applied after 1,000 hours and then being stabilized at +20˚C the capacitors shall meet the following limits Leakage current : ≤Initial specified value Cap. change : within ±20% of the initial measured value tan δ : ≤200% of the initial specified value
Industrial Standard	JIS C - 5101-4 (IEC 60384-4)

CASE SIZE TABLE

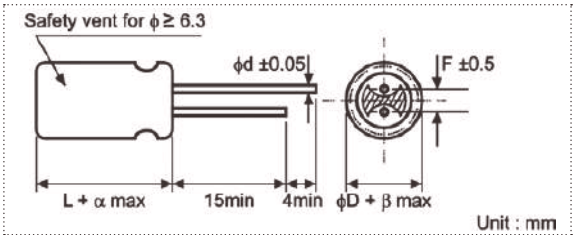

ΦD	5	6.3	8 (L <20)	8 (L ≥20)	10	12.5	16
F	2.0	2.5	3.5	3.5	5.0	5.0	7.5
Φd	0.5	0.5	0.5	0.6	0.6	0.6	0.8
α	(L <20) 1.5				(L ≥20) 2.0		
β	(D <20) 0.5				(D ≥20) 1.0		

RIPPLE CURRENT MULTIPLIER

Frequency Coefficient

Coefficient / Freq. (Hz) / Cap (μF)	50	120	300	1k	10k~
≤47	0.75	1.00	1.35	1.57	2.00
68~220	0.80	1.00	1.23	1.34	1.50
≥560	0.85	1.00	1.10	1.13	1.15

PART NUMBER SYSTEM (EXAMPLE : 10V 47μF)

1	2 3	4 5 6	7	8 9	10	11 12	13 14
E	NH	476	M	1A	E	11	RR

- Type (Radial Bulk)
- Case Length (11mm)
- Diameter (6.3mm)
- Voltage (10V)
- Tolerance (±20%)
- Capacitance (47μF)
- Series
- E-CAP

SAMXON®
Aluminum Electrolytic Capacitors

+105˚C, Non-polar (無極性)

STANDARD RATINGS

Voltage (Code)		6.3V (0J)		10V (1A)		16V (1C)		25V (1E)	
Cap. (μF)	Code	Case Size	Ripple Current	Case Size	Ripple Current	Case Size	Ripple Current	Case Size	Ripple Current
4.7	475							5 x 11	23
10	106					5 x 11	30	5 x 11	34
22	226			5 x 11	42	6.3 x 11	51	6.3 x 11	55
33	336	5 x 11	46	6.3 x 11	57	6.3 x 11	63	8 x 12	79
47	476	6.3 x 11	61	6.3 x 11	67	8 x 12	89	10 x 12.5	100
100	107	8 x 12	104	10 x 12.5	125	10 x 12.5	139	10 x 16	164
220	227	10 x 12.5	168	10 x 16	204	10 x 20	279	12.5 x 25	336
330	337	10 x 16	229	10 x 20	275	12.5 x 20	346	12.5 x 25	414
470	477	10 x 20	330	12.5 x 20	371	12.5 x 25	460	16 x 25	543
1000	108	12.5 x 25	550	16 x 25	668	16 x 25	746	16 x 30	871

Maximum Allowable Ripple Current (mArms) at 105˚C 120Hz

Case Size ΦD x L (mm)

Voltage (Code)		35V (1V)		50V (1H)		63V (1J)		100V (2A)	
Cap. (μF)	Code	Case Size	Ripple Current	Case Size	Ripple Current	Case Size	Ripple Current	Case Size	Ripple Current
2.2	225			5 x 11	18			6.3 x 11	22
3.3	335			5 x 11	22	6.3 x 11	26	8 x 12	32
4.7	475	5 x 11	25	6.3 x 11	29	6.3 x 11	31	8 x 12	39
10	106	6.3 x 11	40	8 x 12	51	8 x 12	53	10 x 12.5	64
22	226	8 x 12	68	10 x 12.5	82	10 x 16	96	10 x 20	114
33	336	10 x 12.5	89	10 x 16	107	10 x 20	129	12.5 x 20	164
47	476	10 x 12.5	111	10 x 20	146	10 x 20	157	12.5 x 25	200
100	107	10 x 20	196	12.5 x 25	264	12.5 x 25	275	16 x 25	304
220	227	12.5 x 25	364	16 x 25	443	16 x 30	486		
330	337	16 x 25	493	16 x 30	593				
470	477	16 x 25	586						

Maximum Allowable Ripple Current (mArms) at 105˚C 120Hz

Case Size ΦD x L (mm)

Specifications are subject to change without notice. Should a safety or technical concern arise regarding the product, please be sure to contact our sales offices or agents immediately.

FEATURES

- 105˚C high temperature and high voltage, load life : 2,000 hours.
- For slim size adaptor, LCD / LED-TV and LCD-Monitor power.

SPECIFICATIONS

Item	Performance Characteristics
Operating Temperature Range	-25 to +105˚C
Rated Working Voltage Range	200 to 450V
Nominal Capacitance Range	22 to 270μF
Capacitance Tolerance	±20% at 120Hz, +20˚C
Leakage Current	I ≤0.03CV +40 (μA) after 2 minutes application of rated working voltage at +20˚C
tan δ (120Hz, +20˚C)	Working Voltage (V): 200, 220, 250, 400, 420, 450 tan δ (max.): 0.20, 0.20, 0.20, 0.24, 0.24, 0.24
Low Temperature Characteristics	Impedance ratio max. at 120Hz Rated Voltage (V): 200, 220, 250, 400, 420, 450 Z-25˚C / Z+20˚C: 4, 4, 6, 8, 8, 15
High Temperature Loading	Test time : 2,000 hours Test temperature : +105˚C Test conditions : Rated DC working voltage with rated ripple current Post test requirements at +20˚C Leakage current : ≤Initial specified value Cap. change : within ±20% of the initial measured value tan δ : ≤200% of the initial specified value
Shelf Life	At +105˚C no voltage applied after 1,000 hours and then being stabilized at +20˚C the capacitors shall meet the following limits Leakage current : ≤Initial specified value Cap. change : within ±20% of the initial measured value tan δ : ≤200% of the initial specified value
Industrial Standard	JIS C - 5101-4 (IEC 60384-4)

CASE SIZE TABLE

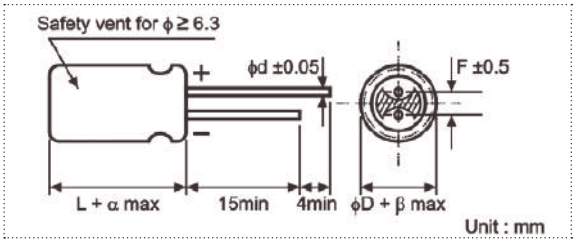

ΦD	10	12.5
F	5.0	5.0
Φd	0.6	0.6
α	2.0	
β	1.0	

RIPPLE CURRENT MULTIPLIER

Frequency Coefficient

Coefficient / Freq. (Hz) / Rated Voltage	50	120	300	1k	10k~
200~450V	0.80	1.00	1.25	1.40	1.60

PART NUMBER SYSTEM (EXAMPLE : 200V 220μF)

1	2 3	4 5 6	7	8 9	10	11 12	13 14
E	KM	227	M	2D	I	50	RR

- Type (Radial Bulk)
- Case Length (50mm)
- Diameter (12.5mm)
- Voltage (200V)
- Tolerance (±20%)
- Capacitance (220μF)
- Series
- E-CAP

STANDARD RATINGS

Voltage (Code)		200V (2D)		220V (2N)		250V (2E)	
Cap. (μF)	Code	Case Size	Ripple Current	Case Size	Ripple Current	Case Size	Ripple Current
82	826					10 x 45	390
100	107	10 x 40	410	10 x 45	420	10 x 50	430
						12.5 x 35	440
120	127	10 x 45	425	10 x 50	480	12.5 x 40	505
150	157	10 x 55	500	12.5 x 40	550	12.5 x 45	585
		12.5 x 35	495				
180	187	12.5 x 40	560	12.5 x 45	630	12.5 x 55	625
220	227	12.5 x 50	640	12.5 x 55	690		
270	277	12.5 x 60	695				

Maximum Allowable Ripple Current (mArms) at 105˚C 120Hz

Case Size ΦD x L (mm)

Voltage (Code)		400V (2G)		420V (2M)		450V (2W)	
Cap. (μF)	Code	Case Size	Ripple Current	Case Size	Ripple Current	Case Size	Ripple Current
22	226					10 x 35	135
27	276					10 x 40	165
33	336	10 x 40	245	10 x 40	215	10 x 45	200
39	396	10 x 45	320	10 x 45	245	10 x 50	245
						12.5 x 35	255
47	476	10 x 50	360	10 x 55	295	10 x 60	300
		12.5 x 35	350	12.5 x 35	285	12.5 x 40	305
56	566	10 x 60	415	12.5 x 40	345	12.5 x 45	350
		12.5 x 40	400				
68	686	12.5 x 45	465	12.5 x 50	400	12.5 x 50	390
82	826	12.5 x 55	500	12.5 x 55	455	12.5 x 60	440
100	107	12.5 x 60	520				

Maximum Allowable Ripple Current (mArms) at 105˚C 120Hz

Case Size ΦD x L (mm)

Specifications are subject to change without notice. Should a safety or technical concern arise regarding the product, please be sure to contact our sales offices or agents immediately.

FEATURES

- 105˚C high temperature and high voltage, load life : 5,000 hours.
- For slim size adaptor, LCD / LED-TV and LCD-Monitor power.

SPECIFICATIONS

Item	Performance Characteristics
Operating Temperature Range	-25 to +105˚C
Rated Working Voltage Range	200 to 450V
Nominal Capacitance Range	22 to 220μF
Capacitance Tolerance	±20% at 120Hz, +20˚C
Leakage Current	I ≤0.02CV +25 (μA) after 2 minutes application of rated working voltage at +20˚C
tan δ (120Hz, +20˚C)	Working Voltage (V): 200, 220, 250, 400, 420, 450 tan δ (max.): 0.20, 0.20, 0.20, 0.24, 0.24, 0.24
Low Temperature Characteristics	Impedance ratio max. at 120Hz Rated Voltage (V): 200, 220, 250, 400, 420, 450 Z-25˚C / Z+20˚C: 4, 4, 6, 8, 8, 15
High Temperature Loading	Test time : 5,000 hours Test temperature : +105˚C Test conditions : Rated DC working voltage with rated ripple current Post test requirements at +20˚C Leakage current : ≤Initial specified value Cap. change : within ±20% of the initial measured value tan δ : ≤200% of the initial specified value
Shelf Life	At +105˚C no voltage applied after 1,000 hours and then being stabilized at +20˚C the capacitors shall meet the following limits Leakage current : ≤Initial specified value Cap. change : within ±20% of the initial measured value tan δ : ≤200% of the initial specified value
Industrial Standard	JIS C - 5101-4 (IEC 60384-4)

CASE SIZE TABLE

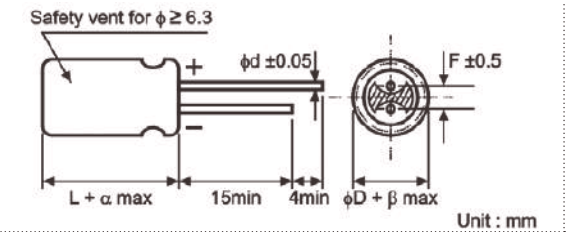

ΦD	10	12.5
F	5.0	5.0
Φd	0.6	0.6
α	2.0	
β	1.0	

RIPPLE CURRENT MULTIPLIER

Frequency Coefficient

Coefficient / Freq. (Hz) / Rated Voltage	50	120	300	1k	10k~
200~450V	0.80	1.00	1.25	1.40	1.60

PART NUMBER SYSTEM (EXAMPLE : 250V 150μF)

1	2 3	4 5 6	7	8 9	10	11 12	13 14
E	RW	157	M	2E	I	50	RR

- Type (Radial Bulk)
- Case Length (50mm)
- Diameter (12.5mm)
- Voltage (250V)
- Tolerance (±20%)
- Capacitance (150μF)
- Series
- E-CAP

SAMXON®
Aluminum Electrolytic Capacitors

+105˚C, Pen Cap. (筆型電容), Long Life Assurance (長壽命)

STANDARD RATINGS

Voltage (Code)		200V (2D)		220V (2N)		250V (2E)	
Cap. (μF)	Code	Case Size	Ripple Current	Case Size	Ripple Current	Case Size	Ripple Current
82	826					10 x 45	390
100	107	10 x 45	420	10 x 45	420	10 x 55 12.5 x 35	440
120	127	10 x 50	435	10 x 55	490	12.5 x 40	505
150	157	10 x 60 12.5 x 40	500	12.5 x 40	550	12.5 x 50	590
180	187	12.5 x 45	580	12.5 x 45	630	12.5 x 55	625
220	227	12.5 x 55	650	12.5 x 55	690		

Maximum Allowable Ripple Current (mArms) at 105˚C 120Hz

Case Size ΦD x L (mm)

Voltage (Code)		400V (2G)		420V (2M)		450V (2W)	
Cap. (μF)	Code	Case Size	Ripple Current	Case Size	Ripple Current	Case Size	Ripple Current
22	226					10 x 35	135
27	276					10 x 40	165
33	336	10 x 40	245	10 x 45	220	10 x 45	200
39	396	10 x 45	320	10 x 50 12.5 x 35	245	10 x 55 12.5 x 35	255
47	476	10 x 55 12.5 x 35	360	10 x 60 12.5 x 35	295	12.5 x 40	305
56	566	12.5 x 40	400	12.5 x 40	345	12.5 x 45	350
68	686	12.5 x 45	465	12.5 x 50	400	12.5 x 55	400
82	826	12.5 x 55	500	12.5 x 60	460	12.5 x 51	420

Maximum Allowable Ripple Current (mArms) at 105˚C 120Hz

Case Size ΦD x L (mm)

Specifications are subject to change without notice. Should a safety or technical concern arise regarding the product, please be sure to contact our sales offices or agents immediately.

FEATURES

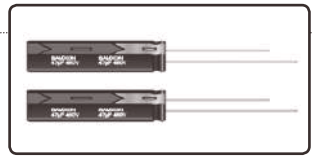

- 105˚C high temperature and high voltage, load life : 10,000 hours.
- For slim size adaptor, LCD / LED-TV and LCD-Monitor power.

SPECIFICATIONS

Item	Performance Characteristics
Operating Temperature Range	-25 to +105˚C
Rated Working Voltage Range	200 to 450V
Nominal Capacitance Range	22 to 220μF
Capacitance Tolerance	±20% at 120Hz, +20˚C
Leakage Current	I ≤0.02CV +25 (μA) after 2 minutes application of rated working voltage at +20˚C
tan δ (120Hz, +20˚C)	Working Voltage (V): 200, 220, 250, 400, 420, 450 tan δ (max.): 0.20, 0.20, 0.20, 0.24, 0.24, 0.24
Low Temperature Characteristics	Impedance ratio max. at 120Hz Rated Voltage (V): 200, 220, 250, 400, 420, 450 Z-25˚C / Z+20˚C: 4, 4, 6, 8, 8, 15
High Temperature Loading	Test time : 10,000 hours Test temperature : +105˚C Test conditions : Rated DC working voltage with rated ripple current Post test requirements at +20˚C Leakage current : ≤Initial specified value Cap. change : within ±20% of the initial measured value tan δ : ≤200% of the initial specified value
Shelf Life	At +105˚C no voltage applied after 1,000 hours and then being stabilized at +20˚C the capacitors shall meet the following limits Leakage current : ≤Initial specified value Cap. change : within ±20% of the initial measured value tan δ : ≤200% of the initial specified value
Industrial Standard	JIS C - 5101-4 (IEC 60384-4)

CASE SIZE TABLE

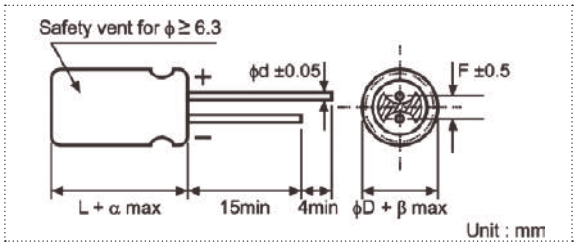

ΦD	10	12.5
F	5.0	5.0
Φd	0.6	0.6
α	2.0	
β	1.0	

RIPPLE CURRENT MULTIPLIER

Frequency Coefficient

Coefficient / Freq. (Hz) / Rated Voltage	50	120	300	1K	10k~
200~450V	0.80	1.00	1.25	1.40	1.60

PART NUMBER SYSTEM (EXAMPLE : 250V 150μF)

1	2 3	4 5 6	7	8 9	10	11 12	13 14
E	RY	157	M	2E	I	50	RR

- Type (Radial Bulk)
- Case Length (50mm)
- Diameter (12.5mm)
- Voltage (250V)
- Tolerance (±20%)
- Capacitance (150μF)
- Series
- E-CAP

STANDARD RATINGS

Voltage (Code)		200V (2D)		220V (2N)		250V (2E)	
Cap. (μF)	Code	Case Size	Ripple Current	Case Size	Ripple Current	Case Size	Ripple Current
82	826					10 x 45	390
100	107	10 x 45	420	10 x 45	430	10 x 55 12.5 x 35	440
120	127	10 x 50	435	10 x 55	490	12.5 x 40	505
150	157	10 x 60 12.5 x 40	500	12.5 x 40	550	12.5 x 50	590
180	187	12.5 x 45	580	12.5 x 50	640	12.5 x 55	625
220	227	12.5 x 55	650	12.5 x 60	700		

Maximum Allowable Ripple Current (mArms) at 105˚C 120Hz

Case Size ΦD x L (mm)

Voltage (Code)		400V (2G)		420V (2M)		450V (2W)	
Cap. (μF)	Code	Case Size	Ripple Current	Case Size	Ripple Current	Case Size	Ripple Current
22	226					10 x 40	145
27	276					10 x 45	175
33	336	10 x 40	245	10 x 45	220	10 x 50 12.5 x 35	210 220
39	396	10 x 45	320	10 x 50 12.5 x 35	245	10 x 60 12.5 x 40	260
47	476	10 x 55 12.5 x 35	360	10 x 60 12.5 x 35	295	12.5 x 45	315
56	566	12.5 x 40	400	12.5 x 45	355	12.5 x 50	365
68	686	12.5 x 45	465	12.5 x 50	400	12.5 x 60	410
82	826	12.5 x 55	500	12.5 x 60	460		

Maximum Allowable Ripple Current (mArms) at 105˚C 120Hz

Case Size ΦD x L (mm)

Specifications are subject to change without notice. Should a safety or technical concern arise regarding the product, please be sure to contact our sales offices or agents immediately.

CASE SIZE TABLE

SW-Type

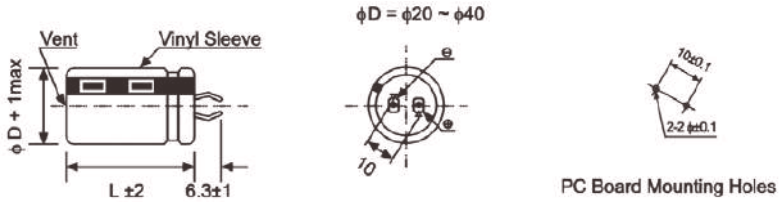

Unit : mm

SZ-Type

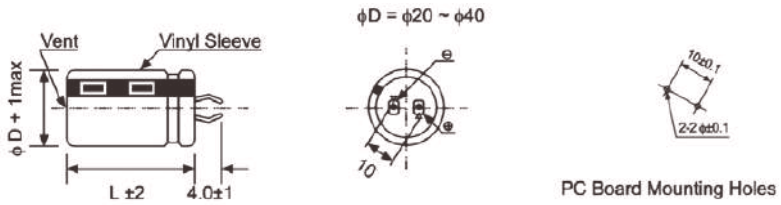

Unit : mm

SG-Type

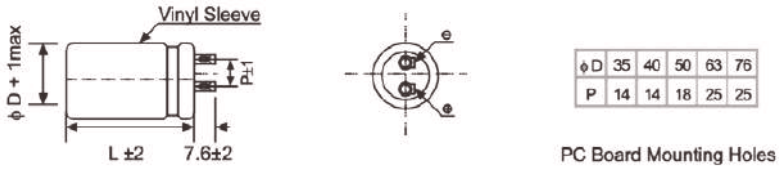

φD	35	40	50	63	76
P	14	14	18	25	25

Unit : mm

SX-Type

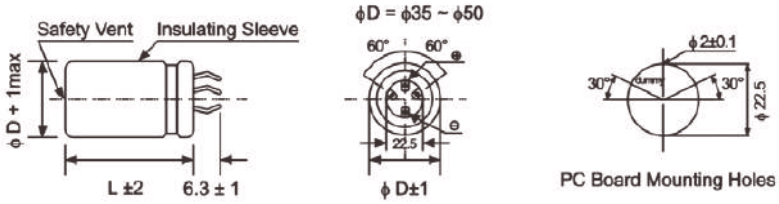

Unit : mm

LD-Type

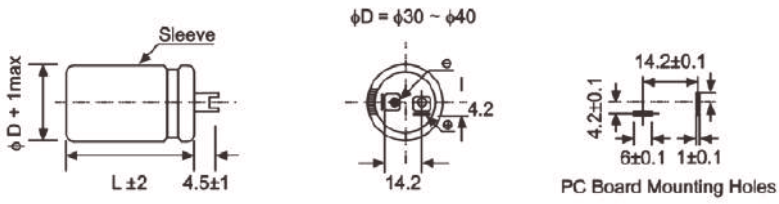

Unit : mm

ST-Type

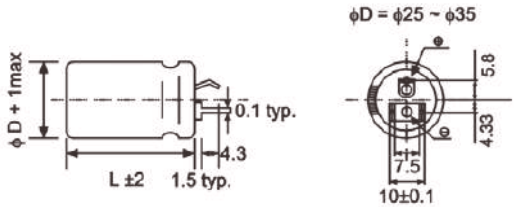

Unit : mm

CASE SIZE TABLE

FE-Type

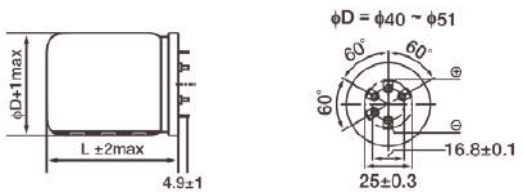

Unit : mm

VO-Type

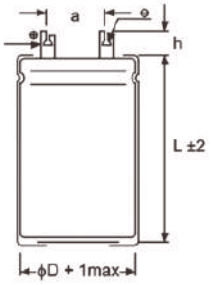

D	h	a
20	10	10
30	10	10
35	10	10
40	10	20
50	10	20

Unit : mm

VO-Type
成品带螺柱

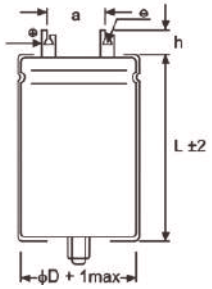

D	h	a	B
20	10	10	M8 x 12
30	10	10	M8 x 12
35	10	10	M8 x 12
40	10	20	M8 x 12
50	10	20	M12 x 16

Unit : mm

	thread	max. tightening torque
mounting	M8	4 Nm
mounting	M12	10 Nm

FEATURES

- Directly mountable on printed circuit board without holders.
- Smaller in sizes than ordinary capacitors.
- Terminal spacing fixed at 10mm for PC board plug in.
- Aluminum case designed with explosion-proof vent.

SPECIFICATIONS

Item	Performance Characteristics	
Operating Temperature Range	-40 to +85˚C	-25 to +85˚C
Rated Working Voltage Range	10 to 250V	315 to 700V
Nominal Capacitance Range	56 to 82000μF	
Capacitance Tolerance	±20% at 120Hz, +20˚C	
Leakage Current	$I \le 3\sqrt{CV}$ (μA) after 5 minutes application of rated working voltage at +20˚C	

tan δ (120Hz, +20˚C)

Working Voltage (V)	10	16	25	35	50	63	80	100
tan δ (max.)	0.55	0.50	0.45	0.40	0.35	0.30	0.25	0.20

Working Voltage (V)	160~250	315~420	450~700
tan δ (max.)	0.15	0.15	0.20

For capacitance value >33000μF, add following calculated value: $\frac{\text{(rated capacitance) - 33000μF}}{\text{10000μF}} \times 0.1$

Low Temperature Characteristics

Impedance ratio max. at 120Hz

Working Voltage (V)	10~100	160~250	315~385	400~450	500~700
Z-25˚C / Z+20˚C	4	3	5	8	8
Z-40˚C / Z+20˚C	15	15	–	–	–

High Temperature Loading

Test time : 2,000 hours
Test temperature : +85˚C
Test conditions : Rated DC working voltage with rated ripple current

Post test requirements at +20˚C
Leakage current : ≤Initial specified value
Cap. change : within ±20% of the initial measured value
tan δ : ≤200% of the initial specified value

Shelf Life

At +85˚C no voltage applied after 1,000 hours and then being stabilized at +20˚C the capacitors shall meet the following limits
Leakage current : ≤Initial specified value
Cap. change : within ±15% of the initial measured value
tan δ : ≤150% of the initial specified value

Industrial Standard	JIS C - 5101-4 (IEC 60384-4)

RIPPLE CURRENT MULTIPLIER

Frequency Coefficient

Coefficient / Freq. (Hz) / Rated Voltage	60	120	1k	10k~50k
10~100V	0.90	1.00	1.15	1.25
160~250V	0.80	1.00	1.15	1.47
315~500V	0.80	1.00	1.15	1.47
550~700V	0.80	1.00	1.30	1.41

PART NUMBER SYSTEM (EXAMPLE : 250V 330μF)

1	2 3	4 5 6	7	8 9	10	11 12	13 14
E	LP	337	M	2E	N	30	SW

- Type (Terminal Code)
- Case Length (30mm)
- Diameter (22mm)
- Voltage (250V)
- Tolerance (±20%)
- Capacitance (330μF)
- Series
- E-CAP

STANDARD RATINGS

Voltage (Code)		10V (1A)		16V (1C)		25V (1E)		35V (1V)	
Cap. (μF)	Code	Case Size	Ripple Current	Case Size	Ripple Current	Case Size	Ripple Current	Case Size	Ripple Current
2700	278							20 x 25	1.76
3300	338							20 x 30	2.14
3900	398							20 x 30	2.28
								22 x 25	2.22
4700	478					20 x 25	2.18	20 x 35	2.46
								22 x 30	2.46
								25 x 25	2.43
5600	568					20 x 30	2.33	22 x 35	2.79
						22 x 25	2.31	25 x 30	2.75
6800	688			20 x 25	2.33	20 x 35	2.56	22 x 40	2.97
								25 x 30	2.89
						22 x 30	2.56	30 x 25	3.09
8200	828			20 x 30	2.56	20 x 40	2.91	22 x 45	3.47
						22 x 30	2.86	25 x 35	3.33
				22 x 25	2.56	25 x 25	2.78	30 x 30	3.29
10000	109	20 x 25	2.22	20 x 35	2.85	22 x 35	3.31	22 x 50	3.75
								25 x 40	3.65
				22 x 30	2.89	25 x 30	3.16	30 x 30	3.61
12000	129	20 x 30	2.44	20 x 40	3.20	22 x 40	3.77	25 x 45	4.15
				22 x 30	3.13	25 x 35	3.63	30 x 35	4.14
		22 x 25	2.41	25 x 25	3.01	30 x 25	3.80	35 x 30	4.27
15000	159	20 x 35	2.90	22 x 35	3.69	22 x 50	4.21	30 x 40	4.80
		22 x 30	2.88	25 x 30	3.64	25 x 40	4.10		
		25 x 25	2.88	30 x 25	3.73	30 x 30	4.00	35 x 35	4.95
18000	189	20 x 40	3.31	22 x 40	3.98	25 x 45	4.68	30 x 45	5.30
		22 x 35	3.22	25 x 35	3.98	30 x 35	4.66		
		25 x 30	3.08	30 x 30	3.88	35 x 30	4.68	35 x 40	5.71
22000	229	22 x 40	3.79	22 x 50	4.52	30 x 40	5.33	35 x 45	6.38
		25 x 30	3.66	25 x 40	4.44				
		30 x 25	3.53	30 x 30	4.38	35 x 35	5.26		
27000	279	22 x 45	4.04	25 x 45	4.98	30 x 45	6.02	35 x 50	6.90
		25 x 35	4.04	30 x 35	4.95				
		30 x 30	3.99	35 x 30	4.82	35 x 40	6.02		
33000	339	22 x 50	4.58	25 x 50	5.49	35 x 45	6.75		
		25 x 40	4.56	30 x 40	5.60				
		30 x 30	4.58	35 x 30	5.46				
39000	399	25 x 45	5.29	30 x 45	6.21	35 x 50	7.56		
		30 x 35	5.21						
		35 x 30	5.50	35 x 35	6.12				
47000	479	25 x 50	5.78	30 x 50	6.93				
		30 x 40	5.78						
		35 x 35	5.55	35 x 40	6.89				
56000	569	30 x 45	6.59	35 x 45	7.69				
		35 x 35	6.40						
68000	689	30 x 50	7.50						
		35 x 40	7.48						
82000	829	35 x 50	8.50						

Maximum Allowable Ripple Current (Arms) at 85˚C 120Hz

Case Size ΦD x L (mm)

Specifications are subject to change without notice. Should a safety or technical concern arise regarding the product, please be sure to contact our sales offices or agents immediately.

STANDARD RATINGS

Voltage (Code)		50V (1H)		63V (1J)		80V (1K)		100V (2A)	
Cap. (μF)	Code	Case Size	Ripple Current	Case Size	Ripple Current	Case Size	Ripple Current	Case Size	Ripple Current
680	687							20 x 25	1.66
820	827							20 x 30	1.85
								22 x 25	1.86
1000	108					20 x 25	1.56	20 x 35	2.02
								22 x 30	2.02
1200	128					20 x 30	1.80	20 x 40	2.12
						22 x 25	1.77	22 x 30	2.12
								25 x 25	2.11
1500	158			20 x 25	1.69	20 x 35	2.10	22 x 35	2.45
						22 x 30	2.01	25 x 30	2.47
1800	188	20 x 25	1.70	20 x 30	2.04	20 x 40	2.30	22 x 40	2.77
				22 x 25	1.90	22 x 30	2.11	25 x 35	2.81
						25 x 25	2.26	30 x 25	2.65
2200	228	20 x 30	2.07	20 x 35	2.40	22 x 40	2.53	22 x 45	3.15
		22 x 25	1.93	22 x 30	2.35	25 x 30	2.53	25 x 40	3.21
				25 x 25	2.30	30 x 25	2.56	30 x 30	3.17
2700	278	20 x 35	2.21	20 x 40	2.52	22 x 45	2.93	25 x 45	3.66
		22 x 30	2.21	22 x 35	2.50	25 x 35	2.93	30 x 35	3.65
				25 x 30	2.52	30 x 30	2.91	35 x 30	3.77
3300	338	20 x 40	2.41	22 x 40	2.72	22 x 50	3.23	25 x 50	4.15
		22 x 30	2.41	25 x 30	2.74	25 x 40	3.29	30 x 40	4.18
		25 x 25	2.38	30 x 25	2.78	30 x 30	3.25	35 x 35	4.07
3900	398	22 x 35	2.72	22 x 45	3.09	25 x 45	3.62	30 x 45	4.67
		25 x 30	2.68	25 x 35	3.13	30 x 35	3.70	35 x 35	4.61
				30 x 30	3.09				
4700	478	22 x 40	3.02	22 x 50	3.69	25 x 50	4.28	30 x 50	5.26
		25 x 30	3.07	25 x 40	3.59	30 x 40	4.23	35 x 40	5.23
		30 x 25	3.01	30 x 30	3.54	35 x 30	4.12		
5600	568	22 x 45	3.43	25 x 45	4.01	30 x 45	4.70	35 x 45	5.88
		25 x 35	3.47	30 x 35	4.00	35 x 35	4.64		
		30 x 30	3.43	35 x 30	3.75				
6800	688	22 x 50	3.94	25 x 50	4.52	30 x 50	5.27	35 x 50	6.01
		25 x 40	3.87	30 x 40	4.55	35 x 40	5.24		
		30 x 35	3.93	35 x 30	4.44				
8200	828	25 x 45	4.44	30 x 45	5.12	35 x 45	5.89		
		30 x 35	4.47	35 x 35	5.05				
		35 x 30	4.41						
10000	109	30 x 40	5.08	30 x 50	5.78	35 x 50	6.63		
		35 x 35	4.92	35 x 40	5.75				
12000	129	30 x 50	5.72	35 x 45	6.47				
		35 x 40	5.69						
15000	159	35 x 45	6.56						
18000	189	35 x 50	7.14						

Maximum Allowable Ripple Current (Arms) at 85˚C 120Hz

Case Size ΦD x L (mm)

Specifications are subject to change without notice. Should a safety or technical concern arise regarding the product, please be sure to contact our sales offices or agents immediately.

Lug / Snap-in Terminal Type (插入/自立型), Standard (標準品)

STANDARD RATINGS

Voltage (Code)		160V (2C)		180V (2P)		200V (2D)		220V (2N)	
Cap. (μF)	Code	Case Size	Ripple Current	Case Size	Ripple Current	Case Size	Ripple Current	Case Size	Ripple Current
180	187							20 x 25	1.11
220	227					20 x 25	1.19	20 x 25	1.23
								22 x 25	1.30
270	277	20 x 25	1.28	20 x 25	1.29	20 x 30	1.39	20 x 30	1.46
						22 x 25	1.37	22 x 25	1.42
330	337	20 x 25	1.55	20 x 30	1.77	20 x 30	1.56	20 x 35	1.64
				22 x 25	1.49	22 x 25	1.51	22 x 30	1.59
								25 x 25	1.59
390	397	20 x 30	1.63	20 x 30	1.84	20 x 35	1.74	20 x 40	1.79
		22 x 25	1.63	22 x 25	1.84	22 x 30	1.73	22 x 35	1.80
						25 x 25	1.71	25 x 25	1.75
470	477	20 x 35	1.90	20 x 35	1.91	20 x 40	2.03	22 x 35	2.06
		22 x 30	1.86	22 x 30	1.91	22 x 30	1.97	25 x 30	2.08
		25 x 25	1.86	25 x 25	2.08	25 x 30	1.95	30 x 25	2.16
560	567	20 x 40	2.14	20 x 40	2.15	22 x 40	2.18	22 x 40	2.22
		22 x 30	2.15	22 x 35	2.25	25 x 30	2.15	25 x 35	2.38
		25 x 30	2.15	25 x 25	2.25	30 x 25	2.15	30 x 25	2.18
680	687	22 x 40	2.35	22 x 35	2.48	22 x 45	2.48	22 x 45	2.62
		25 x 30	2.33	25 x 30	2.50	25 x 35	2.48	25 x 40	2.56
		30 x 25	2.33	30 x 25	2.46	30 x 30	2.48	30 x 30	2.52
820	827	22 x 45	2.68	22 x 40	2.86	22 x 50	2.81	25 x 45	2.91
		25 x 35	2.65	25 x 35	2.75	25 x 40	2.79	30 x 35	2.84
		30 x 30	2.64	30 x 25	2.69	30 x 30	2.75	35 x 30	2.79
1000	108	22 x 50	3.02	25 x 40	3.06	25 x 45	3.28	25 x 50	3.53
		25 x 40	3.00	30 x 30	3.10	30 x 35	3.15	30 x 40	3.36
		30 x 30	2.96			35 x 30	3.25	35 x 30	3.29
1200	128	25 x 45	3.43	25 x 45	3.63	25 x 50	3.61	30 x 45	3.72
		30 x 35	3.41	30 x 35	3.55	30 x 40	3.61	35 x 35	3.68
		35 x 30	3.40	35 x 30	3.49	35 x 35	3.57		
1500	158	30 x 40	3.96	30 x 40	4.10	30 x 45	4.13	35 x 40	4.10
		35 x 35	3.94	35 x 35	4.02	35 x 40	4.06		
1800	188	30 x 45	4.31	30 x 45	4.55	35 x 45	4.59	35 x 45	4.52
		35 x 35	4.28	35 x 35	4.54				
2200	228	35 x 40	4.96	35 x 40	4.83	35 x 50	5.25		
2700	278	35 x 50	5.57	35 x 50	5.30				

Maximum Allowable Ripple Current (Arms) at 85˚C 120Hz

Case Size ΦD x L (mm)

Specifications are subject to change without notice. Should a safety or technical concern arise regarding the product, please be sure to contact our sales offices or agents immediately.

STANDARD RATINGS

Voltage (Code)		250V (2E)		315V (2F)		350V (2V)		385V (2Y)	
Cap. (μF)	Code	Case Size	Ripple Current	Case Size	Ripple Current	Case Size	Ripple Current	Case Size	Ripple Current
68	686							20 x 25	0.68
82	826							20 x 30	0.74
								22 x 25	0.76
100	107							20 x 30	0.86
								22 x 30	0.89
120	127					20 x 30	0.96	20 x 35	0.96
								22 x 30	0.98
						22 x 25	1.04	25 x 25	1.02
150	157			20 x 30	1.00	20 x 30	1.10	20 x 40	1.10
						22 x 30	1.20	22 x 35	1.12
						25 x 25	1.22	25 x 30	1.14
180	187	20 x 25	1.20	20 x 35	1.13	20 x 35	1.24	22 x 40	1.27
				22 x 30	1.29	22 x 30	1.34	25 x 35	1.30
				25 x 25	1.38	25 x 25	1.37	30 x 25	1.37
220	227	20 x 30	1.26	20 x 40	1.29	22 x 35	1.47	22 x 45	1.42
				22 x 35	1.41	25 x 30	1.53	25 x 35	1.48
		22 x 25	1.24	25 x 30	1.47	30 x 25	1.54	30 x 30	1.49
270	277	20 x 30	1.42	22 x 40	1.70	22 x 40	1.70	25 x 40	1.61
						25 x 35	1.73		
		22 x 30	1.50	25 x 30	1.70	30 x 25	1.80	30 x 35	16.4
330	337	20 x 35	1.68	22 x 45	1.91	22 x 45	1.87	25 x 50	1.80
		22 x 30	1.66	25 x 35	1.94	25 x 40	1.97	30 x 40	1.85
		25 x 25	1.61	30 x 30	1.98	30 x 30	2.03	35 x 30	1.87
390	397	20 x 40	1.92	22 x 50	2.07	25 x 40	2.14	30 x 40	2.05
		22 x 35	1.88	25 x 40	2.11	30 x 35	2.23		
		25 x 30	1.88	30 x 30	2.15	35 x 30	2.30	35 x 35	2.07
470	477	22 x 40	2.15	25 x 45	2.39	30 x 35	2.53	30 x 50	2.26
		25 x 35	2.15	30 x 35	2.38				
		30 x 25	2.04	35 x 30	2.36	35 x 30	2.55	35 x 40	2.26
560	567	22 x 45	2.48	30 x 40	2.63	30 x 40	2.73	35 x 45	2.59
		25 x 35	2.35						
		30 x 30	2.35	35 x 35	2.69	35 x 35	2.75		
680	687	25 x 40	2.67	30 x 45	2.80	35 x 40	3.15	35 x 50	2.80
		30 x 35	2.71	35 x 40	3.05				
820	827	25 x 50	3.01	30 x 50	3.28	35 x 45	3.47		
		30 x 35	2.98						
		35 x 30	2.96	35 x 45	3.45				
1000	108	30 x 45	3.56	35 x 50	3.57	35 x 50	3.60		
		35 x 35	3.48						
1200	128	30 x 50	3.99						
		35 x 40	3.84						
1500	158	35 x 45	4.33						
1800	188	35 x 50	4.54						

Maximum Allowable Ripple Current (Arms) at 85˚C 120Hz

Case Size ΦD x L (mm)

Specifications are subject to change without notice. Should a safety or technical concern arise regarding the product, please be sure to contact our sales offices or agents immediately.

STANDARD RATINGS

Voltage (Code)		400V (2G)		420V (2M)		450V (2W)		500V (2H)	
Cap. (μF)	Code	Case Size	Ripple Current	Case Size	Ripple Current	Case Size	Ripple Current	Case Size	Ripple Current
56	566					20 x 25	0.61		
68	686	20 x 25	0.75	20 x 25	0.70	20 x 30	0.70		
						22 x 25	0.71		
82	826	20 x 30	0.82	20 x 30	0.80	20 x 35	0.80		
		22 x 25	0.84	22 x 25	0.85	22 x 25	0.86		
100	107	20 x 30	0.95	20 x 35	0.90	20 x 35	0.88	25 x 25	0.80
		22 x 30	0.99	22 x 30	0.97	22 x 30	0.95		
		25 x 25	0.99	25 x 25	0.98	25 x 25	0.97	30 x 25	0.90
120	127	20 x 35	1.07	20 x 35	1.04	20 x 40	0.99	25 x 30	0.89
						22 x 35	1.07		
		22 x 30	1.09	22 x 30	1.07	25 x 30	1.09	30 x 25	0.90
		25 x 25	1.13	25 x 25	1.08	30 x 25	1.12		
150	157	20 x 40	1.22	20 x 45	1.17	22 x 40	1.18	25 x 35	1.07
				22 x 35	1.21				
		22 x 35	1.24	25 x 30	1.26	25 x 30	1.25		
		25 x 30	1.27	30 x 25	1.30	30 x 25	1.29		
180	187	22 x 40	1.41	22 x 40	1.33	22 x 45	1.32	30 x 35	1.30
		25 x 30	1.44	25 x 35	1.42	25 x 35	1.40		
		30 x 25	1.52	30 x 25	1.48	30 x 30	1.45		
220	227	22 x 45	1.58	22 x 45	1.55	25 x 40	1.59	25 x 45	1.40
		25 x 35	1.64	25 x 35	1.58	30 x 30	1.64		
		30 x 30	1.66	30 x 30	1.65	35 x 30	1.66		
270	277	25 x 40	1.79	25 x 40	1.74	25 x 45	1.73	25 x 50	1.60
				30 x 35	1.90	30 x 35	1.89		
		30 x 30	1.82	35 x 30	1.94	35 x 30	1.90	30 x 40	1.55
330	337	25 x 45	2.00	25 x 50	2.20	30 x 40	2.12	30 x 45	1.80
		30 x 35	2.05	30 x 35	1.98				
		35 x 30	2.05	35 x 35	2.17	35 x 35	2.15		
390	397	30 x 40	2.26	30 x 40	2.22	30 x 45	2.35	30 x 50	2.10
		35 x 35	2.28	35 x 35	2.27	35 x 40	2.38		
470	477	30 x 45	2.51	30 x 45	2.50	35 x 45	2.68		
		35 x 40	2.54	35 x 40	2.61				
560	567	35 x 40	2.85	35 x 45	2.95				
680	687	35 x 50	3.10						

Maximum Allowable Ripple Current (Arms) at 85˚C 120Hz

Case Size ΦD x L (mm)

Specifications are subject to change without notice. Should a safety or technical concern arise regarding the product, please be sure to contact our sales offices or agents immediately.

STANDARD RATINGS

Voltage (Code)		550V (2S)		600V (26)		650V (F5)		700V (2S)	
Cap. (μF)	Code	Case Size	Ripple Current	Case Size	Ripple Current	Case Size	Ripple Current	Case Size	Ripple Current
150	157	30 x 35	1.04	30 x 40	1.00	30 x 45	1.00	30 x 45	1.00
180	187	30 x 40	1.20	30 x 45	1.20	30 x 50	1.20	35 x 45	1.20
220	227	30 x 45	1.30	30 x 50	1.40	30 x 55	1.40	35 x 50	1.40
270	277	30 x 50	1.60	30 x 60	1.60	30 x 60	1.60	35 x 60	1.54
		35 x 40	1.60	35 x 50	1.60	35 x 50	1.50		
330	337	30 x 60	1.90	35 x 50	1.80	35 x 60	1.90	35 x 70	1.92
		35 x 50	1.80	40 x 50	1.80	40 x 50	1.80		
390	397	30 x 70	2.20	35 x 60	2.20	35 x 70	2.10	35 x 70	2.00
		35 x 60	2.10	40 x 50	2.20	40 x 60	2.10		
470	477	35 x 60	2.50	35 x 70	2.50	40 x 60	2.40	35 x 80	2.28
		40 x 50	2.50	40 x 60	2.50	45 x 50	2.40		
560	567	35 x 65	2.90	35 x 80	2.90	40 x 70	2.80	40 x 100	3.20
		40 x 60	2.90	40 x 70	2.90	45 x 60	2.80		
680	687	35 x 80	3.40	40 x 80	3.40	40 x 85	3.40		
		40 x 70	3.40	45 x 70	3.30	45 x 70	3.20		
820	827	40 x 75	4.10	45 x 75	3.90	45 x 80	3.80		
		35 x 90	3.90	50 x 60	4.10	50 x 70	3.80		
1000	108	40 x 90	4.60	45 x 90	4.60	45 x 100	4.50		
		50 x 60	4.60	50 x 70	4.50	50 x 80	4.40		
1200	128	45 x 90	5.30	50 x 85	5.30	50 x 100	5.20		
		50 x 70	5.20						
1500	158	50 x 90	6.00						

Maximum Allowable Ripple Current (Arms) at 85˚C 120Hz

Case Size ΦD x L (mm)

Specifications are subject to change without notice. Should a safety or technical concern arise regarding the product, please be sure to contact our sales offices or agents immediately.

SAMXON®
Aluminum Electrolytic Capacitors

Lug / Snap-in Terminal Type (插入/自立型), For Audio (音響電容)

FEATURES

- Designed for high grade audio equipment, giving priority to high fidelity sound quality.
- Suitable for use in mini-compos, CD, DAT players, cassette decks and etc.

SPECIFICATIONS

Item	Performance Characteristics
Operating Temperature Range	-40 to +85˚C
Rated Working Voltage Range	16 to 100V
Nominal Capacitance Range	680 to 10000µF
Capacitance Tolerance	±20% at 120Hz, +20˚C
Leakage Current	I ≤3$\sqrt{CV}$ (µA) after 5 minutes application of rated working voltage at +20˚C
tan δ (120Hz, +20˚C)	Working Voltage (V): 16 / 25~63 / 80~100 tan δ (max.): 0.30 / 0.25 / 0.22
Low Temperature Characteristics	Impedance ratio max. at 120Hz Working Voltage (V): 16~100 Z-25˚C / Z+20˚C: 4 Z-40˚C / Z+20˚C: 15
High Temperature Loading	Test time : 1,000 hours Test temperature : +85˚C Test condition : Rated DC working voltage with rated ripple current Post test requirements at +20˚C Leakage current : ≤Initial specified value Cap. change : within ±20% of the initial measured value tan δ : ≤200% of the initial specified value
Shelf Life	At +85˚C no voltage applied after 1,000 hours and then being stabilized at +20˚C the capacitors shall meet the following limits Leakage current : ≤Initial specified value Cap. change : within ±20% of the initial measured value tan δ : ≤200% of the initial specified value
Industrial Standard	JIS C - 5101-4 (IEC 60384-4)

RIPPLE CURRENT MULTIPLIER

Frequency Coefficient

Coefficient / Freq. (Hz) / Rated Voltage	60	120	1k	10k~50k
16~100V	0.90	1.00	1.15	1.25

PART NUMBER SYSTEM (EXAMPLE : 16V 4700µF)

1	2 3	4 5 6	7	8 9	10	11 12	13 14
E	AP	478	M	1C	N	25	SW

- Type (Terminal Code)
- Case Length (25mm)
- Diameter (22mm)
- Voltage (16V)
- Tolerance (±20%)
- Capacitance (4700µF)
- Series
- E-CAP

STANDARD RATINGS

Voltage (Code)		16V (1C)		25V (1E)		35V (1V)		63V (1J)	
Cap. (μF)	Code	Case Size	Ripple Current	Case Size	Ripple Current	Case Size	Ripple Current	Case Size	Ripple Current
680	687							22 x 25	0.75
1000	108							22 x 30	1.00
								25 x 25	1.00
1500	158					22 x 25	1.15	22 x 35	1.30
								25 x 30	1.30
								30 x 25	1.35
2200	228			22 x 25	1.35	22 x 30	1.50	22 x 45	1.75
								25 x 40	1.80
						25 x 25	1.50	30 x 30	1.75
								35 x 25	1.80
3300	338	22 x 20	1.35	22 x 30	1.80	22 x 35	1.95	25 x 50	2.45
				25 x 25	1.80	25 x 30	1.95	30 x 40	2.45
						30 x 25	2.00	35 x 30	2.40
4700	478	22 x 25	1.80	22 x 35	2.30	22 x 45	2.55	30 x 50	3.20
						25 x 40	2.65		
				25 x 30	2.30	30 x 30	2.60	35 x 40	3.20
				30 x 25	2.40	35 x 25	2.65		
6800	688	22 x 35	2.25	22 x 45	2.75	25 x 50	3.10	35 x 50	3.75
				25 x 40	2.80	30 x 40	3.10		
		25 x 30	2.25	30 x 30	2.75				
		30 x 25	2.35	35 x 25	2.85	35 x 30	3.00		
10000	109	22 x 45	2.50	25 x 50	3.10	30 x 50	3.40		
		25 x 35	2.50	30 x 40	3.10				
		30 x 30	2.50			35 x 40	3.40		
		35 x 25	2.60	35 x 30	3.00				

Maximum Allowable Ripple Current (Arms) at 85˚C 120Hz

Case Size ΦD x L (mm)

Voltage (Code)		80V (1K)		100V (2A)	
Cap. (μF)	Code	Case Size	Ripple Current	Case Size	Ripple Current
680	687	22 x 30	0.90	22 x 35	0.95
		25 x 25	0.90	25 x 30	1.00
				30 x 25	1.00
1000	108	22 x 35	1.20	22 x 50	1.35
				25 x 40	1.35
		25 x 30	1.20	30 x 30	1.35
		30 x 25	1.25	35 x 25	1.35
1500	158	22 x 50	1.70	25 x 50	1.80
		25 x 40	1.65	30 x 40	1.85
		30 x 30	1.65		
		35 x 25	1.65	35 x 25	1.35
2200	228	25 x 50	2.20	30 x 50	2.45
		30 x 40	2.20	35 x 40	2.45
		35 x 30	2.15		
3300	338	30 x 50	3.00	35 x 40	2.45
		35 x 40	2.95		
4700	478	35 x 50	3.90		

Maximum Allowable Ripple Current (Arms) at 85˚C 120Hz

Case Size ΦD x L (mm)

Specifications are subject to change without notice. Should a safety or technical concern arise regarding the product, please be sure to contact our sales offices or agents immediately.

SAMXON®
Aluminum Electrolytic Capacitors

Lug / Snap-in Terminal Type (插入/自立型), Withstanding Vibration (耐振動)

FEATURES

- Designed for withstanding vibration.
- Suitable for washing machines and etc.

SPECIFICATIONS

Item	Performance Characteristics	
Operating Temperature Range	-40 to +85˚C	-25 to +85˚C
Rated Working Voltage Range	10 to 250V	315 to 500V
Nominal Capacitance Range	56 to 82000μF	
Capacitance Tolerance	±20% at 120Hz, +20˚C	
Leakage Current	I ≤3$\sqrt{CV}$ (μA) after 5 minutes application of rated working voltage at +20˚C	

tan δ (120Hz, +20˚C)

Working Voltage (V)	10	16	25	35	50	63	80
tan δ (max.)	0.55	0.50	0.45	0.40	0.35	0.30	0.25

Working Voltage (V)	100	160~250	315~450	500
tan δ (max.)	0.20	0.15	0.15	0.20

For capacitance value >33000μF, add following calculated value: $\frac{\text{(rated capacitance) - 33000μF}}{\text{10000μF}}$ x 0.1

Low Temperature Characteristics

Impedance ratio max. at 120Hz

Working Voltage (V)	10~100	160~250	315~385	400~450	500
Z-25˚C / Z+20˚C	4	3	5	8	8
Z-40˚C / Z+20˚C	15	15	–	–	–

High Temperature Loading

Test time : 2,000 hours
Test temperature : +85˚C
Test condition : Rated DC working voltage with rated ripple current

Post test requirements at +20˚C
Leakage current : ≤Initial specified value
Cap. change : within ±20% of the initial measured value
tan δ : ≤200% of the initial specified value

Shelf Life

At +85˚C no voltage applied after 1,000 hours and then being stabilized at +20˚C the capacitors shall meet the following limits
Leakage current : ≤Initial specified value
Cap. change : within ±15% of the initial measured value
tan δ : ≤150% of the initial specified value

Industrial Standard	JIS C - 5101-4 (IEC 60384-4)

RIPPLE CURRENT MULTIPLIER

Frequency Coefficient

Coefficient / Freq. (Hz) / Rated Voltage	60	120	1k	10k-50k
10~100V	0.90	1.00	1.15	1.25
160~250V	0.80	1.00	1.15	1.47
315~500V	0.80	1.00	1.15	1.47

PART NUMBER SYSTEM (EXAMPLE : 160V 1000μF)

1	2 3	4 5 6	7	8 9	10	11 12	13 14
E	QP	108	M	2C	O	40	SW

- Type (Terminal Code)
- Case Length (40mm)
- Diameter (25mm)
- Voltage (160V)
- Tolerance (±20%)
- Capacitance (1000μF)
- Series
- E-CAP

STANDARD RATINGS

Voltage (Code)		10V (1A)		16V (1C)		25V (1E)		35V (1V)	
Cap. (μF)	Code	Case Size	Ripple Current	Case Size	Ripple Current	Case Size	Ripple Current	Case Size	Ripple Current
2700	278							20 x 25	1.76
3300	338							20 x 30	2.14
3900	398							20 x 30	2.28
								22 x 25	2.22
4700	478					20 x 25	2.18	20 x 35	2.46
								22 x 30	2.46
								25 x 25	2.43
5600	568					20 x 30	2.33	22 x 35	2.79
						22 x 25	2.31	25 x 30	2.75
6800	688			20 x 25	2.33	20 x 35	2.56	22 x 40	2.89
								25 x 30	2.89
						22 x 30	2.56	30 x 25	3.09
8200	828	22 x 40	22 x 40	20 x 30	2.56	20 x 40	2.91	22 x 45	3.47
		25 x 30	25 x 30	22 x 25	2.56	22 x 35	2.81	25 x 35	3.33
		30 x 25	30 x 25			25 x 25	2.78	30 x 30	3.29
10000	109	20 x 25	2.22	20 x 35	2.85	22 x 35	3.18	22 x 50	3.59
				22 x 30	2.81	25 x 30	3.16	25 x 40	3.59
								30 x 30	3.61
12000	129	20 x 30	2.44	20 x 40	3.20	22 x 40	3.53	25 x 45	4.01
				22 x 30	3.13	25 x 35	3.48	30 x 35	4.01
		22 x 25	2.41	25 x 25	2.96	30 x 25	3.53	35 x 30	4.02
15000	159	20 x 35	2.90	22 x 35	3.69	22 x 50	4.08	30 x 40	4.80
		22 x 30	2.88	25 x 30	3.64	25 x 40	4.00		
		25 x 25	2.88	30 x 25	3.73	30 x 30	4.00	35 x 35	4.08
18000	189	20 x 40	3.31	22 x 40	3.98	25 x 45	4.68	30 x 45	5.18
		22 x 35	3.22	25 x 35	3.98	30 x 35	4.66		
		25 x 30	3.08	30 x 30	3.88	35 x 30	4.68	35 x 40	5.71
22000	229	22 x 40	3.79	22 x 50	4.52	30 x 40	5.19	35 x 45	6.38
		25 x 30	3.66	25 x 40	4.44				
		30 x 25	3.53	30 x 30	4.38	35 x 35	5.20		
27000	279	22 x 45	4.04	25 x 45	4.98	30 x 45	6.02	35 x 50	6.90
		25 x 35	4.04	30 x 35	4.82				
		30 x 30	3.99	35 x 30	4.82	35 x 40	6.02		
33000	339	22 x 50	4.58	25 x 50	5.49	35 x 45	6.75		
		25 x 40	4.56	30 x 40	5.38				
		30 x 30	4.58	35 x 35	5.33				
39000	399	25 x 45	5.29	30 x 45	6.11	35 x 50	7.56		
		30 x 35	5.21						
		35 x 30	5.50	35 x 35	6.01				
47000	479	25 x 50	5.78	30 x 50	6.80				
		30 x 40	5.78						
		35 x 35	5.55	35 x 40	6.80				
56000	569	30 x 45	6.59	35 x 45	7.62				
		35 x 35	6.40						
68000	689	30 x 50	7.50						
		35 x 40	7.48						
82000	829	35 x 50	8.50						

Maximum Allowable Ripple Current (Arms) at 85°C 120Hz

Case Size ΦD x L (mm)

Specifications are subject to change without notice. Should a safety or technical concern arise regarding the product, please be sure to contact our sales offices or agents immediately.

STANDARD RATINGS

Voltage (Code)		50V (1H)		63V (1J)		80V (1K)		100V (2A)	
Cap. (μF)	Code	Case Size	Ripple Current	Case Size	Ripple Current	Case Size	Ripple Current	Case Size	Ripple Current
680	687							20 x 25	1.66
820	827							20 x 30	1.85
								22 x 25	1.86
1000	108					20 x 25	1.56	20 x 35	2.02
								22 x 30	2.02
1200	128					20 x 30	1.80	20 x 40	2.12
								22 x 30	2.12
						22 x 25	1.77	25 x 25	2.10
1500	158			20 x 25	1.69	20 x 35	2.10	22 x 35	2.45
						22 x 30	2.01	25 x 30	2.43
1800	188	20 x 25	1.70	20 x 30	2.04	20 x 40	2.30	22 x 40	2.77
				22 x 25	1.90	22 x 35	2.25	25 x 35	2.77
						25 x 25	2.26	30 x 25	2.65
2200	228	20 x 30	2.07	20 x 35	2.40	22 x 40	2.53	22 x 45	3.12
		22 x 25	1.93	22 x 30	2.35	25 x 30	2.53	25 x 40	3.20
				25 x 25	2.30	30 x 25	2.50	30 x 30	3.10
2700	278	20 x 35	2.21	20 x 40	2.52	22 x 45	2.93	25 x 45	3.61
		22 x 30	2.21	22 x 35	2.50	25 x 35	2.93	30 x 35	3.60
				25 x 30	2.49	30 x 30	2.91	35 x 30	3.71
3300	338	20 x 40	2.41	22 x 40	2.69	22 x 50	3.25	25 x 50	4.06
		22 x 30	2.41	25 x 30	2.69	25 x 40	3.25	30 x 40	4.05
		25 x 25	2.38	30 x 25	2.78	30 x 30	3.23	35 x 35	4.07
3900	398	22 x 35	2.72	22 x 45	3.10	25 x 45	3.62	30 x 45	4.60
		25 x 30	2.68	25 x 35	3.09	30 x 35	3.62	35 x 35	4.50
				30 x 30	3.09				
4700	478	22 x 40	3.01	22 x 50	3.49	25 x 50	4.28	30 x 50	5.13
		25 x 30	3.03	25 x 40	3.37	30 x 40	4.15	35 x 40	5.12
		30 x 25	3.01	30 x 30	3.37	35 x 30	4.10		
5600	568	22 x 45	3.43	25 x 45	3.80	30 x 45	4.55	35 x 45	5.75
		25 x 35	3.37	30 x 35	3.81	35 x 35	4.51		
		30 x 30	3.43	35 x 30	3.75				
6800	688	22 x 50	3.94	25 x 50	4.41	30 x 50	5.18	35 x 50	6.01
		25 x 40	3.87	30 x 40	4.41	35 x 40	5.14		
		30 x 35	3.87	35 x 35	4.33				
8200	828	25 x 45	4.37	30 x 45	4.90	35 x 45	5.83		
		30 x 35	4.42	35 x 35	4.80				
		35 x 30	4.41						
10000	109	30 x 40	5.02	30 x 50	5.49				
		35 x 35	4.92	35 x 40	5.47				
12000	129	30 x 50	5.60	35 x 50	6.30				
		35 x 40	5.60						
15000	159	35 x 45	6.44						
18000	189	35 x 50	6.71						

Maximum Allowable Ripple Current (Arms) at 85˚C 120Hz

Case Size ΦD x L (mm)

Specifications are subject to change without notice. Should a safety or technical concern arise regarding the product, please be sure to contact our sales offices or agents immediately.

STANDARD RATINGS

Voltage (Code)		160V (2C)		180V (2P)		200V (2D)		220V (2N)	
Cap. (μF)	Code	Case Size	Ripple Current	Case Size	Ripple Current	Case Size	Ripple Current	Case Size	Ripple Current
180	187							20 x 25	1.09
220	227					20 x 25	1.13	20 x 30	1.15
								22 x 25	1.09
270	277	20 x 25	1.22	20 x 25	1.23	20 x 30	1.32	20 x 30	1.38
						22 x 25	1.30	22 x 25	1.31
330	337	20 x 30	1.48	20 x 30	1.48	20 x 30	1.49	20 x 35	1.51
				22 x 25	1.42	22 x 25	1.44	22 x 30	1.58
								25 x 25	1.49
390	397	20 x 30	1.55	20 x 30	1.58	20 x 35	1.66	20 x 40	1.73
		22 x 25	1.55	22 x 30	1.61	22 x 30	1.65	22 x 35	1.69
						25 x 25	1.63	25 x 30	1.71
470	477	20 x 35	1.81	20 x 35	1.82	20 x 40	1.93	22 x 40	1.99
		22 x 30	1.77	22 x 30	1.80	22 x 35	1.88	25 x 30	1.95
		25 x 25	1.77	25 x 25	1.80	25 x 30	1.86	30 x 25	1.89
560	567	20 x 40	2.04	20 x 40	2.04	22 x 40	2.08	22 x 45	2.28
		22 x 35	2.05	22 x 35	2.09	25 x 30	2.05	25 x 35	2.22
		25 x 30	2.05	25 x 30	2.05	30 x 25	2.05	30 x 30	2.19
680	687	22 x 40	2.24	22 x 40	2.36	22 x 45	2.36	22 x 50	2.46
		25 x 30	2.22	25 x 35	2.34	25 x 35	2.36	25 x 40	2.40
		30 x 25	2.22	30 x 25	2.27	30 x 30	2.36	30 x 30	2.39
820	827	22 x 45	2.55	22 x 45	2.72	22 x 50	2.68	25 x 45	2.81
		25 x 35	2.52	25 x 35	2.58	25 x 40	2.66	30 x 35	2.70
		30 x 30	2.51	30 x 30	2.56	30 x 30	2.62	35 x 30	2.62
1000	108	22 x 50	2.88	25 x 45	2.91	25 x 45	3.12	25 x 50	3.13
		25 x 40	2.86	30 x 35	2.95	30 x 35	3.00	30 x 40	3.08
		30 x 30	2.82			35 x 30	2.96	35 x 35	3.05
1200	128	25 x 45	3.27	25 x 50	3.46	25 x 50	3.44	30 x 45	3.60
		30 x 35	3.25	30 x 40	3.38	30 x 40	3.44	35 x 40	3.51
		35 x 30	3.24	35 x 30	3.32	35 x 35	3.40		
1500	158	30 x 40	3.77	30 x 45	3.90	30 x 50	3.93	35 x 45	3.92
		35 x 35	3.75	35 x 35	3.83	35 x 40	3.87		
1800	188	30 x 45	4.10	30 x 50	4.33	35 x 45	4.37		
		35 x 35	4.08	35 x 40	4.32				
2200	228	35 x 45	4.72	35 x 45	4.60	35 x 50	5.00		
2700	278	35 x 50	5.30	35 x 50	5.05				

Maximum Allowable Ripple Current (Arms) at 85˚C 120Hz

Case Size ΦD x L (mm)

Specifications are subject to change without notice. Should a safety or technical concern arise regarding the product, please be sure to contact our sales offices or agents immediately.

STANDARD RATINGS

Voltage (Code)		250V (2E)		315V (2F)		350V (2V)		385V (2Y)	
Cap. (μF)	Code	Case Size	Ripple Current	Case Size	Ripple Current	Case Size	Ripple Current	Case Size	Ripple Current
68	686							20 x 25	0.60
82	826							20 x 30	0.67
								22 x 25	0.70
100	107							20 x 30	0.80
								22 x 30	0.82
120	127					20 x 30	0.91	20 x 35	0.89
								22 x 30	0.91
						22 x 25	0.99	25 x 25	0.95
150	157			20 x 30	0.95	20 x 35	1.05	20 x 40	1.05
						22 x 30	1.14	22 x 35	1.04
						25 x 25	1.16	25 x 30	1.08
180	187	20 x 25	1.14	20 x 35	1.08	20 x 40	1.18	20 x 40	1.18
				22 x 30	1.23	22 x 35	1.28	25 x 35	1.20
				25 x 25	1.31	25 x 30	1.30	30 x 25	1.28
220	227	20 x 30	1.20	20 x 40	1.23	22 x 40	1.40	22 x 45	1.33
		22 x 25	1.18	22 x 35	1.34	25 x 35	1.46	25 x 35	1.44
				25 x 30	1.40	30 x 25	1.47	30 x 30	1.40
270	277	20 x 30	1.35	22 x 40	1.60	22 x 45	1.62	25 x 40	1.56
		22 x 30	1.43	25 x 30	1.62	25 x 35	1.65	30 x 35	1.62
						30 x 30	1.71		
330	337	20 x 35	1.60	22 x 45	1.82	22 x 50	1.78	25 x 50	1.80
		22 x 30	1.58	25 x 35	1.85	25 x 40	1.88	30 x 40	1.85
		25 x 25	1.53	30 x 30	1.89	30 x 35	1.93	35 x 30	1.85
390	397	20 x 40	1.83	22 x 50	1.97	25 x 45	2.04	30 x 40	2.04
		22 x 35	1.79	25 x 40	2.01	30 x 35	2.12	35 x 35	2.06
		25 x 30	1.79	30 x 30	2.05	35 x 30	2.19		
470	477	22 x 40	2.05	25 x 45	2.20	30 x 40	2.41	30 x 50	2.27
		25 x 35	2.05	30 x 35	2.27	35 x 35	2.43	35 x 40	2.30
		30 x 25	1.94	35 x 30	2.25				
560	567	22 x 45	2.36	30 x 40	2.50	30 x 45	2.60	35 x 45	2.57
		25 x 35	2.24	35 x 35	2.56	35 x 35	2.62		
		30 x 30	2.24						
680	687	25 x 40	2.54	30 x 45	2.67	35 x 40	3.00	35 x 50	2.80
		30 x 35	2.58	35 x 40	2.90				
820	827	25 x 50	2.87	30 x 50	3.12	35 x 50	3.30		
		30 x 35	2.84	35 x 45	3.29				
		35 x 30	2.82						
1000	108	30 x 45	3.39	35 x 50	3.40				
		35 x 35	3.31						
1200	128	30 x 50	3.80						
		35 x 40	3.66						
1500	158	35 x 45	4.12						
1800	188	35 x 50	4.31						

Maximum Allowable Ripple Current (Arms) at 85˚C 120Hz

Case Size ΦD x L (mm)

Specifications are subject to change without notice. Should a safety or technical concern arise regarding the product, please be sure to contact our sales offices or agents immediately.

STANDARD RATINGS

Voltage (Code)		400V (2G)		420V (2M)		450V (2W)		500V (2H)	
Cap. (μF)	Code	Case Size	Ripple Current	Case Size	Ripple Current	Case Size	Ripple Current	Case Size	Ripple Current
56	566					20 x 25	0.58		
68	686	20 x 25	0.71	20 x 25	0.65	20 x 30	0.67		
						22 x 25	0.68		
82	826	20 x 30	0.78	20 x 30	0.73	20 x 35	0.76		
		22 x 25	0.80	22 x 25	0.75	22 x 30	0.82		
100	107	20 x 30	0.90	20 x 35	0.85	20 x 35	0.84	30 x 25	0.90
				22 x 30	0.87	22 x 35	0.90		
		22 x 30	0.94	25 x 25	0.92	25 x 25	0.92		
120	127	20 x 35	1.02	20 x 35	0.99	20 x 40	0.94	30 x 30	1.00
						22 x 35	1.02		
		22 x 30	1.04	22 x 30	1.01	25 x 30	1.04	35 x 25	1.00
		25 x 25	1.08	25 x 25	1.03	30 x 25	1.07		
150	157	20 x 40	1.16	20 x 45	1.15	22 x 40	1.12	30 x 35	1.20
				22 x 35	1.19				
		22 x 35	1.18	25 x 30	1.19	25 x 35	1.19		
		25 x 30	1.21	30 x 25	1.14	30 x 30	1.23		
180	187	22 x 40	1.34	22 x 45	1.36	22 x 50	1.26	30 x 40	1.40
		25 x 35	1.37	25 x 35	1.37	25 x 40	1.33		
		30 x 25	1.45	30 x 25	1.35	30 x 30	1.38	35 x 30	1.30
220	227	22 x 45	1.50	22 x 50	1.69	25 x 45	1.51	30 x 45	1.60
		25 x 35	1.56	25 x 40	1.58	30 x 35	1.56		
		30 x 30	1.58	30 x 30	1.56	35 x 30	1.58	35 x 35	1.50
270	277	25 x 40	1.70	25 x 45	1.83	25 x 50	1.65	30 x 50	1.80
				30 x 35	1.72	30 x 40	1.80		
		30 x 35	1.73	35 x 30	1.76	35 x 35	1.81	35 x 40	1.70
330	337	25 x 50	1.90	25 x 50	2.18	30 x 45	2.02	35 x 45	2.00
		30 x 40	1.95	30 x 40	1.98				
		35 x 30	1.95	35 x 35	2.04	35 x 35	2.05		
390	397	30 x 40	2.15	30 x 45	2.34	30 x 50	2.24	35 x 50	2.30
		35 x 35	2.17	35 x 35	2.26	35 x 40	2.27		
470	477	30 x 50	2.39	30 x 50	2.67	35 x 45	2.55		
		35 x 40	2.42	35 x 40	2.60				
560	567	35 x 45	2.71	35 x 45	2.93				
680	687	35 x 50	2.95						

Maximum Allowable Ripple Current (Arms) at 85˚C 120Hz

Case Size ΦD x L (mm)

Specifications are subject to change without notice. Should a safety or technical concern arise regarding the product, please be sure to contact our sales offices or agents immediately.

SAMXON®
Aluminum Electrolytic Capacitors

Lug / Snap-in Terminal Type (插入/自立型), Long Life (長壽命), Low Impedance (低阻抗品)

FEATURES

- High ripple current and high reliability.
- Low equivalent series resistance ESR.
- Different case sizes available for each capacitance value.
- Load life with ripple current: 5,000 hours.

SPECIFICATIONS

Item	Performance Characteristics
Operating Temperature Range	-40 to +85˚C / -25 to +85˚C
Rated Working Voltage Range	160 to 250V / 385 to 650V
Nominal Capacitance Range	47 to 2200μF
Capacitance Tolerance	±20% at 120Hz, +20˚C
Leakage Current	I ≤3$\sqrt{CV}$ (μA) after 5 minutes application of rated working voltage at +20˚C
tan δ (120Hz, +20˚C)	Working Voltage (V): 160~420 / 450~650 tan δ (max.): 0.15 / 0.20
Low Temperature Characteristics	Impedance ratio max. at 120Hz
High Temperature Loading	Test time : 5,000 hours Test temperature : +85˚C Test conditions : Rated DC working voltage with rated ripple current Post test requirements at +20˚C Leakage current : ≤Initial specified value Cap. change : within ±20% of the initial measured value tan δ : ≤200% of the initial specified value
Shelf Life	At +85˚C no voltage applied after 1,000 hours and then being stabilized at +20˚C the capacitors shall meet the following limits Leakage current : ≤Initial specified value Cap. change : within ±15% of the initial measured value tan δ : ≤150% of the initial specified value
Industrial Standard	JIS C - 5101-4 (IEC 60384-4)

Working Voltage (V)	160	200	250	385	400~650
Z-25˚C / Z+20˚C	3	3	3	5	8
Z-40˚C / Z+20˚C	15	–	–	–	–

RIPPLE CURRENT MULTIPLIER

Frequency Coefficient

Coefficient / Freq. (Hz) / Rated Voltage	60	120	1k	10k~50k
160~250V	0.80	1.00	1.15	1.47
385~450V	0.80	1.00	1.15	1.47
500~650V	0.80	1.00	1.30	1.41

PART NUMBER SYSTEM (EXAMPLE : 400V 330μF)

1	2 3	4 5 6	7	8 9	10	11 12	13 14
E	DP	337	M	2G	P	45	SW

- Type (Terminal Code)
- Case Length (45mm)
- Diameter (30mm)
- Voltage (400V)
- Tolerance (±20%)
- Capacitance (330μF)
- Series
- E-CAP

STANDARD RATINGS

Voltage (Code)		160V (2C)			200V (2D)			250V (2E)		
Cap. (μF)	Code	Case Size	Impedance	Ripple Current	Case Size	Impedance	Ripple Current	Case Size	Impedance	Ripple Current
150	157							22 x 25	800	0.91
220	227	22 x 25	730	1.10	22 x 25	490	1.10	22 x 30	500	1.20
								25 x 25	490	1.20
330	337	22 x 30	490	1.40	22 x 30	330	1.40	22 x 40	330	1.60
					25 x 25	330	1.50	25 x 30	330	1.60
470	477	22 x 35	350	1.80	22 x 40	240	1.90	25 x 40	240	2.10
					30 x 25	350	1.90	30 x 30	240	2.00
680	687	25 x 35	240	2.40	25 x 40	160	2.50	30 x 40	160	2.70
					30 x 30	160	2.40			
1000	108	30 x 35	160	3.10	30 x 40	120	3.30	35 x 40	120	3.60
					35 x 35	120	3.50			
1500	158	30 x 45	120	4.20	35 x 45	80	4.60			
2200	228	35 x 50	80	5.80						

Maximum Allowable Ripple Current (Arms) at 85˚C 120Hz
Maximum Impedance (mΩ) at 20˚C 20kHz
Case Size ΦD x L (mm)

Voltage (Code)		385V (2Y)			400V (2G)			420V (2M)		
Cap. (μF)	Code	Case Size	Impedance	Ripple Current	Case Size	Impedance	Ripple Current	Case Size	Impedance	Ripple Current
68	686	22 x 25	1570	0.61	22 x 25	1570	0.61			
100	107	22 x 30	1070	0.79	22 x 30	1070	0.79	22 x 30	1600	0.79
		25 x 25	1070	0.80	25 x 25	1070	0.80	25 x 25	1600	0.80
120	127				22 x 35	890	0.92	22 x 30	1330	0.94
150	157	22 x 40	720	1.10	22 x 40	720	1.10	22 x 40	1070	1.08
		25 x 30	720	1.00	30 x 25	720	1.10	25 x 35	1070	1.11
180	187				30 x 30	600	1.20	25 x 35	890	1.21
								30 x 30	890	1.26
220	227	25 x 40	490	1.40	25 x 40	490	1.40	25 x 40	730	1.41
		30 x 30	490	1.40	30 x 35	490	1.50	30 x 35	730	1.46
270	277				30 x 35	400	1.60	30 x 35	590	1.62
								35 x 30	590	1.71
330	337	30 x 40	330	1.90	30 x 45	330	2.00	30 x 45	490	1.96
								35 x 35	490	1.98
390	397				30 x 50	280	2.20	30 x 50	410	2.22
470	477	35 x 40	240	2.50	35 x 45	240	2.60	35 x 45	340	2.58
560	567	35 x 45	200	2.80	35 x 50	200	2.90	35 x 50	290	2.93

Maximum Allowable Ripple Current (Arms) at 85˚C 120Hz
Maximum Impedance (mΩ) at 20˚C 20kHz
Case Size ΦD x L (mm)

Voltage (Code)		450V (2W)		
Cap. (μF)	Code	Case Size	Impedance	Ripple Current
47	476	22 x 25	3400	0.51
68	686	22 x 30	2350	0.65
		25 x 25	2350	0.66
100	107	22 x 40	1600	0.88
		25 x 30	1600	0.86
		30 x 25	1600	0.90
150	157	25 x 40	1070	1.20
		30 x 30	1070	1.10
180	187	30 x 35	890	1.30
220	227	30 x 40	730	1.50
270	277	30 x 45	600	1.80
330	337	35 x 40	490	2.10
470	477	35 x 50	350	2.70

Maximum Allowable Ripple Current (Arms) at 85˚C 120Hz
Maximum Impedance (mΩ) at 20˚C 20kHz
Case Size ΦD x L (mm)

Specifications are subject to change without notice. Should a safety or technical concern arise regarding the product, please be sure to contact our sales offices or agents immediately.

STANDARD RATINGS

Voltage (Code)		500V (2H)		550V (25)		600V (26)		650V (F5)	
Cap. (μF)	Code	Case Size	Ripple Current	Case Size	Ripple Current	Case Size	Ripple Current	Case Size	Ripple Current
150	157	25 x 40	1.20	25 x 40	1.20	30 x 45	1.20	30 x 45	1.20
		30 x 35	1.20	30 x 35	1.20				
180	187	30 x 40	1.40	30 x 45	1.30	30 x 50	1.40	30 x 50	1.40
		35 x 30	1.30						
220	227	30 x 45	1.60	30 x 50	1.40	30 x 55	1.60	30 x 60	1.50
		35 x 35	1.50						
270	277	30 x 50	1.80	30 x 60	1.70	30 x 65	1.80	30 x 70	1.80
		35 x 40	1.70	35 x 45	1.70			35 x 50	1.70
330	337	30 x 55	2.00	30 x 70	2.00	35 x 55	2.00	30 x 85	2.10
		35 x 45	1.90	35 x 50	2.00	40 x 45	2.00	40 x 50	2.00
390	397	35 x 50	2.30	30 x 80	2.40	35 x 70	2.40	40 x 60	2.20
				35 x 60	2.30	40 x 50	2.40		
470	477	35 x 60	2.50	35 x 70	2.70	35 x 75	2.80	40 x 70	2.60
				40 x 60	2.70	40 x 60	2.80	45 x 55	2.70
560	567	35 x 70	2.80	35 x 80	3.10	35 x 85	3.20	40 x 80	3.20
		40 x 60	2.90	40 x 70	3.60	40 x 70	3.20	45 x 65	3.30
680	687	35 x 80	3.50	35 x 95	3.60	40 x 80	3.70	40 x 95	3.80
		40 x 70	3.60	40 x 80	4.30	45 x 70	3.60	45 x 75	3.60
820	827	35 x 90	4.20	40 x 100	4.40	45 x 85	4.20	45 x 90	4.20
		40 x 70	4.00	45 x 75	4.20	50 x 70	4.40	50 x 75	4.20
1000	108	40 x 80	4.70	45 x 90	4.90	45 x 90	5.10	45 x 100	4.90
		45 x 70	4.70	50 x 75	5.00	50 x 80	5.00	50 x 90	4.80
1200	128	40 x 90	5.50	45 x 100	5.70	50 x 90	5.60	50 x 100	5.60
		45 x 80	5.60	50 x 85	5.60				
1500	158	45 x 100	6.70	50 x 100	6.40	50 x 105	6.40		
		50 x 80	6.50						
1800	188	50 x 90	7.50						

Maximum Allowable Ripple Current (Arms) at 85˚C 120Hz

Case Size ΦD x L (mm)

Specifications are subject to change without notice. Should a safety or technical concern arise regarding the product, please be sure to contact our sales offices or agents immediately.

FEATURES

- Directly mountable on printed circuit board without holders.
- Terminal spacing fixed at 10mm for PC board plug in.
- Aluminum case designed with explosion-proof vent.
- Load life: 10,000 hours.

SPECIFICATIONS

Item	Performance Characteristics
Operating Temperature Range	-25 to +85˚C
Rated Working Voltage Range	200 to 450V
Nominal Capacitance Range	56 to 2200μF
Capacitance Tolerance	±20% at 120Hz, +20˚C
Leakage Current	I ≤3$\sqrt{CV}$ (μA) after 5 minutes application of rated working voltage at +20˚C
tan δ (120Hz, +20˚C)	Working Voltage (V): 200~250 / 400~450 tan δ (max.): 0.15 / 0.15
Low Temperature Characteristics	Impedance ratio max. at 120Hz Working Voltage (V): 200~250 / 400~450 Z-25˚C / Z+20˚C: 3 / 8
High Temperature Loading	Test time : 10,000 hours Test temperature : +85˚C Test conditions : Rated DC working voltage with rated ripple current Post test requirements at +20˚C Leakage current : ≤Initial specified value Cap. change : within ±30% of the initial measured value tan δ : ≤300% of the initial specified value
Shelf Life	At +85˚C no voltage applied after 1,000 hours and then being stabilized at +20˚C the capacitors shall meet the following limits Leakage current : ≤Initial specified value Cap. change : within ±15% of the initial measured value tan δ : ≤150% of the initial specified value
Industrial Standard	JIS C - 5101-4 (IEC 60384-4)

RIPPLE CURRENT MULTIPLIER

Frequency Coefficient

Coefficient / Freq. (Hz) / Rated Voltage	60	120	1k	10k~50k
200~250V	0.80	1.00	1.15	1.47
400~450V	0.80	1.00	1.15	1.47

PART NUMBER SYSTEM (EXAMPLE : 200V 470μF)

1	2 3	4 5 6	7	8 9	10	11 12	13 14
E	TP	477	M	2D	O	30	SW

- 13 14: Type (Terminal Code)
- 11 12: Case Length (30mm)
- 10: Diameter (25mm)
- 8 9: Voltage (200V)
- 7: Tolerance (±20%)
- 4 5 6: Capacitance (470μF)
- 2 3: Series
- 1: E-CAP

STANDARD RATINGS

Voltage (Code)		200V (2D)		250V (2E)		400V (2G)		450V (2W)	
Cap. (μF)	Code	Case Size	Ripple Current	Case Size	Ripple Current	Case Size	Ripple Current	Case Size	Ripple Current
56	566							20 x 25	0.58
68	686					20 x 25	0.71	20 x 30	0.67
								22 x 25	0.68
82	826					20 x 30	0.78	20 x 35	0.76
						22 x 25	0.80	22 x 30	0.82
100	107					20 x 30	0.90	20 x 35	0.84
						22 x 30	0.94	22 x 35	0.90
								25 x 25	0.92
120	127					20 x 35	1.02	20 x 40	0.94
						22 x 30	1.04	22 x 35	1.02
						25 x 25	1.08	25 x 30	1.04
								30 x 25	1.07
150	157					20 x 40	1.16	22 x 40	1.12
						22 x 35	1.18	25 x 35	1.19
						25 x 30	1.21	30 x 30	1.23
180	187			20 x 25	1.14	22 x 40	1.34	22 x 50	1.26
						25 x 35	1.37	25 x 40	1.33
						30 x 25	1.45	30 x 30	1.38
220	227	20 x 25	1.13	20 x 30	1.20	22 x 45	1.50	25 x 45	1.51
				22 x 25	1.18	25 x 35	1.56	30 x 35	1.56
						30 x 30	1.58	35 x 30	1.58
270	277	20 x 30	1.32	20 x 30	1.35	25 x 40	1.70	25 x 50	1.65
		22 x 25	1.30	22 x 30	1.43	30 x 35	1.73	30 x 40	1.80
								35 x 35	1.81
330	337	20 x 30	1.49	20 x 35	1.60	25 x 50	1.90	30 x 45	2.02
		22 x 25	1.44	22 x 30	1.58	30 x 40	1.95	35 x 35	2.05
				25 x 25	1.53	35 x 30	1.95		
390	397	20 x 35	1.66	20 x 40	1.83	30 x 40	2.15	30 x 50	2.24
		22 x 30	1.65	22 x 35	1.79	35 x 35	2.17	35 x 40	2.27
		25 x 25	1.63	25 x 30	1.79				
470	477	20 x 40	1.93	22 x 40	2.05	30 x 50	2.39	35 x 45	2.55
		22 x 35	1.88	25 x 35	2.05	35 x 40	2.42		
		25 x 30	1.86	30 x 25	1.94				
560	567	22 x 40	2.08	22 x 45	2.36	35 x 45	2.71		
		25 x 30	2.05	25 x 35	2.24				
		30 x 25	2.05	30 x 30	2.24				
680	687	22 x 45	2.36	25 x 40	2.54	35 x 50	2.95		
		25 x 35	2.36	30 x 35	2.58				
		30 x 30	2.36						
820	827	22 x 50	2.68	25 x 50	2.87				
		25 x 40	2.66	30 x 35	2.84				
		30 x 30	2.62	35 x 30	2.82				
1000	108	25 x 45	3.12	30 x 45	3.39				
		30 x 35	3.00	35 x 35	3.31				
		35 x 30	2.96						
1200	128	25 x 50	3.44	30 x 50	3.80				
		30 x 40	3.44	35 x 40	3.66				
		35 x 35	3.40						
1500	158	30 x 50	3.93	35 x 45	4.12				
		35 x 40	3.87						
1800	188	35 x 45	4.37	35 x 50	4.31				
2200	228	35 x 50	5.00						

Maximum Allowable Ripple Current (Arms) at 85°C 120Hz

Case Size ΦD x L (mm)

Specifications are subject to change without notice. Should a safety or technical concern arise regarding the product, please be sure to contact our sales offices or agents immediately.

FEATURES

- Highly reliable capacitors that withstand under high ripple current.
- Two or three dimensions with same ratings.
- Aluminum case designed explosion-proof vent.
- Best for switching power supplies.

SPECIFICATIONS

Item	Performance Characteristics	
Operating Temperature Range	-40 to +105˚C	-25 to +105˚C
Rated Working Voltage Range	10 to 100V	160 to 600V
Nominal Capacitance Range	47 to 56000μF	
Capacitance Tolerance	±20% at 120Hz, +20˚C	
Leakage Current	I ≤3$\sqrt{CV}$ (μA) after 5 minutes application of rated working voltage at +20˚C	

tan δ (120Hz, +20˚C)

Working Voltage (V)	10	16	25	35	50	63	80	100
tan δ (max.)	0.55	0.50	0.45	0.35	0.30	0.30	0.25	0.20

Working Voltage (V)	160~220	250	315~385	400~600
tan δ (max.)	0.15	0.15	0.15	0.20

For capacitance value >33000μF, add following calculated value: $\frac{\text{(rated capacitance) - 33000μF}}{\text{10000μF}}$ x 0.1

Low Temperature Characteristics

Impedance ratio max. at 120Hz

Working Voltage (V)	10	16	25	35	50	63	80	100
Z-25˚C / Z+20˚C	6	6	6	6	4	3	3	3
Z-40˚C / Z+20˚C	15	15	15	15	15	15	15	15

Working Voltage (V)	160~180	200~220	250	315~385	400	450	500~600
Z-25˚C / Z+20˚C	8	8	8	8	8	8	8

High Temperature Loading

Test time : 2,000 hours
Test temperature : +105˚C
Test conditions : Rated DC working voltage with rated ripple current

Post test requirements at +20˚C
Leakage current : ≤Initial specified value
Cap. change : within ±20% of the initial measured value
tan δ : ≤200% of the initial specified value

Shelf Life

At +105˚C no voltage applied after 1,000 hours and then being stabilized at +20˚C the capacitors shall meet the following limits
Leakage current : ≤Initial specified value
Cap. change : within ±15% of the initial measured value
tan δ : ≤150% of the initial specified value

Industrial Standard	JIS C - 5101-4 (IEC 60384-4)

RIPPLE CURRENT MULTIPLIER

Frequency Coefficient

Coefficient / Freq. (Hz) / Rated Voltage	60	120	1k	10k~50k
10~100V	0.90	1.00	1.15	1.25
160~250V	0.80	1.00	1.25	1.47
315~500V	0.80	1.00	1.30	1.47
550~600V	0.80	1.00	1.30	1.41

PART NUMBER SYSTEM (EXAMPLE : 350V 220μF)

1	2 3	4 5 6	7	8 9	10	11 12	13 14
E	HP	227	M	2V	O	35	SW

- Type (Terminal Code)
- Case Length (35mm)
- Diameter (25mm)
- Voltage (350V)
- Tolerance (±20%)
- Capacitance (220μF)
- Series
- E-CAP

SAMXON®
Aluminum Electrolytic Capacitors

Lug / Snap-in Terminal Type (插入/自立型), Wide Temperature (寬溫度)

STANDARD RATINGS

Voltage (Code)		10V (1A)		16V (1C)		25V (1E)		35V (1V)	
Cap. (μF)	Code	Case Size	Ripple Current	Case Size	Ripple Current	Case Size	Ripple Current	Case Size	Ripple Current
2700	278							20 x 25	1.62
3300	338							20 x 30	1.94
								22 x 25	1.90
3900	398					20 x 25	1.72	20 x 35	2.02
								22 x 30	2.00
4700	478					20 x 30	2.04	20 x 40	2.21
								22 x 35	2.20
						22 x 25	2.00	25 x 25	2.20
5600	568			20 x 25	1.89	20 x 35	2.23	22 x 35	2.40
						22 x 30	2.20	25 x 30	2.40
6800	688	20 x 25	1.41	20 x 30	2.25	20 x 40	2.72	22 x 40	2.60
						22 x 30	2.40	25 x 35	2.78
				22 x 25	2.20	25 x 25	2.40	30 x 25	2.78
8200	828	20 x 30	1.67	20 x 35	2.43	22 x 35	2.70	22 x 50	2.90
						25 x 30	2.70	25 x 40	2.90
				22 x 30	2.40	30 x 25	2.70	30 x 30	2.90
10000	109	20 x 30	1.88	20 x 40	2.79	22 x 40	3.00	25 x 45	3.20
				22 x 30	2.60	25 x 35	3.00		
		22 x 25	1.80	25 x 25	2.60	30 x 30	3.00	30 x 35	3.20
12000	129	20 x 35	2.23	22 x 35	2.90	22 x 50	3.20	25 x 50	3.50
		22 x 30	2.20	25 x 30	2.90	25 x 40	3.20	30 x 40	3.50
		25 x 25	2.20	30 x 25	2.90	30 x 30	3.20	35 x 30	3.50
15000	159	20 x 40	2.31	22 x 40	3.20	25 x 45	3.60	30 x 45	3.90
		22 x 35	2.30	25 x 35	3.20	30 x 35	3.60		
		25 x 25	2.30	30 x 30	3.20	35 x 30	3.60	35 x 35	3.90
18000	189	22 x 40	2.52	22 x 45	3.50	30 x 40	3.90	35 x 40	4.51
		25 x 30	2.40	25 x 40	3.50				
		30 x 25	2.49	30 x 30	3.50	35 x 35	3.90		
22000	229	22 x 45	2.60	25 x 45	3.80	30 x 45	4.30	35 x 45	5.24
		25 x 35	2.60	30 x 35	3.80				
		30 x 25	2.60	35 x 30	3.80	35 x 35	4.30		
27000	279	22 x 50	3.19	25 x 50	4.20	35 x 45	4.80		
		25 x 40	3.10	30 x 40	4.20				
		30 x 30	3.10	35 x 30	4.20				
33000	339	25 x 45	3.40	30 x 45	4.70	35 x 50	5.55		
		30 x 35	3.40						
		35 x 30	3.40	35 x 35	4.70				
39000	399	30 x 40	3.79	30 x 50	5.10				
		35 x 30	3.70	35 x 40	5.10				
47000	479	30 x 45	4.26	35 x 45	5.50				
		35 x 35	4.20						
56000	569	35 x 40	5.00						

Maximum Allowable Ripple Current (Arms) at 105˚C 120Hz

Case Size ΦD x L (mm)

Specifications are subject to change without notice. Should a safety or technical concern arise regarding the product, p-lease be sure to contact our sales offices or agents immediately.

STANDARD RATINGS

Voltage (Code)		50V (1H)		63V (1J)		80V (1K)		100V (2A)	
Cap. (μF)	Code	Case Size	Ripple Current	Case Size	Ripple Current	Case Size	Ripple Current	Case Size	Ripple Current
560	567							20 x 25	0.95
680	687							20 x 30	1.15
								22 x 25	1.09
820	827					20 x 25	1.04	20 x 35	1.31
								22 x 30	1.40
1000	108			20 x 25	1.21	20 x 30	1.24	20 x 35	1.43
								22 x 30	1.47
						22 x 25	1.19	25 x 25	1.45
1200	128			20 x 30	1.43	20 x 35	1.43	20 x 40	1.61
				22 x 25	1.40	22 x 30	1.50	22 x 35	1.69
								25 x 30	1.68
1500	158	20 x 25	1.29	20 x 35	1.52	20 x 35	1.57	22 x 40	1.97
				22 x 30	1.50	22 x 30	1.59	25 x 35	1.98
						25 x 25	1.59	30 x 25	1.95
1800	188	20 x 30	1.53	20 x 35	1.72	20 x 40	1.77	22 x 45	2.23
		22 x 25	1.50	22 x 30	1.70	22 x 35	1.79	25 x 40	2.20
				25 x 25	1.70	25 x 30	1.71	30 x 30	2.20
2200	228	20 x 35	1.72	20 x 40	2.01	22 x 40	2.03	25 x 45	2.53
		22 x 30	1.70	22 x 30	1.87	25 x 35	2.10	30 x 35	2.55
				25 x 30	2.00	30 x 25	1.98	35 x 30	2.60
2700	278	20 x 35	1.82	22 x 40	2.20	22 x 45	2.39	25 x 50	2.82
		22 x 30	1.80	25 x 35	2.20	25 x 40	2.35	30 x 40	2.86
		25 x 25	1.80	30 x 25	2.20	30 x 30	2.35	35 x 35	2.90
3300	338	20 x 40	2.01	22 x 45	2.60	25 x 45	2.64	30 x 45	3.30
		22 x 35	2.00	25 x 35	2.39	30 x 35	2.61		
		25 x 30	2.00	30 x 30	2.50	35 x 30	2.60	35 x 35	3.25
3900	398	22 x 40	2.23	25 x 40	2.57	25 x 25	2.92	30 x 50	3.60
		25 x 30	2.20	30 x 35	2.70	30 x 40	2.82	35 x 40	3.67
		30 x 25	2.20			35 x 30	2.97		
4700	478	22 x 45	2.50	25 x 50	3.00	30 x 45	3.34	35 x 45	3.80
		25 x 35	2.43	30 x 40	3.00	35 x 35	3.38		
		30 x 30	2.50	35 x 30	3.00				
5600	568	22 x 50	2.80	30 x 40	3.22	30 x 50	3.80	35 x 50	4.05
		25 x 40	2.80	35 x 35	3.30	35 x 40	3.80		
		30 x 30	2.76						
6800	688	25 x 45	3.30	30 x 50	3.86	35 x 45	3.90		
		30 x 35	3.30	35 x 40	3.84				
		35 x 30	3.30						
8200	828	30 x 40	3.71	35 x 45	4.43	35 x 50	4.20		
		35 x 35	3.85						
10000	109	30 x 45	4.30	35 x 50	5.11				
		35 x 40	4.49						
12000	129	35 x 45	4.56						
15000	159	35 x 50	4.80						

Maximum Allowable Ripple Current (Arms) at 105˚C 120Hz

Case Size ΦD x L (mm)

Specifications are subject to change without notice. Should a safety or technical concern arise regarding the product, please be sure to contact our sales offices or agents immediately.

STANDARD RATINGS

Voltage (Code)		160V (2C)		180V (2P)		200V (2D)		220V (2N)	
Cap. (μF)	Code	Case Size	Ripple Current	Case Size	Ripple Current	Case Size	Ripple Current	Case Size	Ripple Current
180	187							20 x 25	0.90
220	227			20 x 25	1.00	20 x 25	1.00	20 x 30	1.00
								22 x 25	1.00
270	277	20 x 25	1.10	20 x 30	1.10	20 x 30	1.10	20 x 35	1.15
				22 x 25	1.00	22 x 25	1.10	22 x 30	1.15
330	337	20 x 30	1.20	20 x 30	1.20	20 x 35	1.20	20 x 40	1.25
						22 x 30	1.25	22 x 35	1.25
		22 x 25	1.20	22 x 25	1.20	25 x 25	1.25	25 x 25	1.25
390	397	20 x 35	1.42	20 x 35	1.30	20 x 40	1.31	20 x 45	1.40
				22 x 30	1.35	22 x 30	1.35	22 x 35	1.40
		22 x 30	1.30	25 x 25	1.35	25 x 25	1.35	25 x 30	1.40
470	477	20 x 40	1.34	20 x 40	1.40	22 x 35	1.50	22 x 40	1.51
		22 x 30	1.55	22 x 35	1.50	25 x 30	1.50	25 x 30	1.44
		25 x 25	1.55	25 x 30	1.50	30 x 25	1.50	30 x 25	1.50
560	567	22 x 35	1.67	22 x 40	1.67	22 x 40	1.67	22 x 45	1.70
				25 x 30	1.67	25 x 30	1.59	25 x 35	1.64
		25 x 30	1.67					30 x 30	1.70
				30 x 25	1.67	30 x 25	1.67	35 x 25	1.71
680	687	22 x 40	1.82	22 x 45	1.78	22 x 45	1.78	25 x 40	1.84
		25 x 35	1.85	25 x 35	1.78	25 x 35	1.72	30 x 35	1.93
		30 x 25	1.82	30 x 30	1.78	30 x 30	1.78	35 x 30	1.89
820	827	22 x 45	2.04	22 x 50	2.04	25 x 40	1.99	25 x 45	2.08
		25 x 35	2.04	25 x 40	2.04	30 x 35	2.04	30 x 40	2.19
		30 x 30	2.04	30 x 30	2.04	35 x 25	2.04	35 x 30	2.16
1000	108	25 x 45	2.40	25 x 45	2.30	25 x 50	2.42	30 x 45	2.50
				30 x 35	2.30	30 x 35	2.30		
		30 x 35	2.25	35 x 30	2.30	35 x 30	2.30	35 x 35	2.44
1200	128	25 x 50	2.62	30 x 40	2.55	30 x 40	2.65	35 x 40	2.79
		30 x 35	2.49	35 x 35	2.55	35 x 35	2.65		
		35 x 30	2.49						
1500	158	30 x 40	2.84	30 x 45	2.90	35 x 40	3.08	35 x 45	3.22
		35 x 35	2.84	35 x 35	2.90				
1800	188	30 x 50	3.32	35 x 40	3.30	35 x 45	3.48		
		35 x 35	3.00						
2200	228	35 x 45	3.50	35 x 50	3.65				

Maximum Allowable Ripple Current (Arms) at 105˚C 120Hz

Case Size ΦD x L (mm)

Specifications are subject to change without notice. Should a safety or technical concern arise regarding the product, please be sure to contact our sales offices or agents immediately.

STANDARD RATINGS

Voltage (Code)		250V (2E)		315V (2F)		350V (2V)		385V (2Y)	
Cap. (μF)	Code	Case Size	Ripple Current	Case Size	Ripple Current	Case Size	Ripple Current	Case Size	Ripple Current
56	566							20 x 25	0.37
68	686					20 x 25	0.47	20 x 30	0.44
								22 x 25	0.45
82	826			20 x 25	0.64	20 x 30	0.54	20 x 30	0.50
								22 x 30	0.52
100	107			20 x 30	0.69	20 x 30	0.60	20 x 35	0.56
								20 x 30	0.58
						22 x 25	0.69	25 x 25	0.57
120	127			20 x 30	0.75	20 x 35	0.68	20 x 40	0.66
								22 x 30	0.64
				22 x 25	0.75	22 x 25	0.70	25 x 30	0.68
150	157	20 x 25	0.79	20 x 35	0.82	20 x 40	0.78	22 x 40	0.79
				22 x 30	0.82			25 x 30	0.78
				25 x 25	0.82	22 x 30	0.77	30 x 25	0.75
180	187	20 x 30	0.90	20 x 40	0.90	22 x 35	0.87	22 x 40	0.84
				22 x 30	0.86	25 x 30	0.92	25 x 35	0.86
		22 x 25	0.88	25 x 25	0.86	30 x 25	0.90	30 x 30	0.88
220	227	20 x 35	1.00	22 x 35	0.98	22 x 40	1.00	22 x 45	0.96
				25 x 30	1.04	25 x 35	1.04	25 x 35	0.94
		22 x 25	1.00	30 x 25	1.04	30 x 30	1.02	30 x 30	1.00
270	277	20 x 40	1.10	22 x 40	1.10	22 x 45	1.11	25 x 45	1.13
		22 x 30	1.18	25 x 35	1.16	25 x 40	1.18	30 x 35	1.08
		25 x 30	1.27	30 x 25	1.16	30 x 30	1.17	35 x 30	1.10
330	337	22 x 35	1.30	22 x 45	1.27	25 x 45	1.29	30 x 45	1.31
		25 x 30	1.30	25 x 40	1.33	30 x 35	1.34		
		30 x 25	1.35	30 x 30	1.33	35 x 30	1.22	35 x 30	1.24
390	397	22 x 40	1.49	25 x 40	1.40	25 x 50	1.51	30 x 45	1.41
		25 x 35	1.49	30 x 35	1.47				
		30 x 25	1.49	35 x 30	1.47	30 x 35	1.43	35 x 35	1.40
470	477	22 x 45	1.65	30 x 40	1.70	30 x 40	1.57	35 x 40	1.68
		25 x 40	1.65						
		30 x 30	1.65	35 x 30	1.70	35 x 35	1.69		
560	567	25 x 45	1.80	30 x 40	1.95	30 x 50	1.85	35 x 45	1.87
		30 x 35	1.80	35 x 35	2.05	35 x 40	1.90		
680	687	25 x 50	2.03	35 x 40	2.17	35 x 45	2.20		
		30 x 35	2.00						
		35 x 30	2.00						
820	827	30 x 40	2.30	35 x 45	2.20				
		35 x 35	2.30						
1000	108	30 x 50	2.70						
		35 x 40	2.69						
1200	128	35 x 45	3.09						

Maximum Allowable Ripple Current (Arms) at 105°C 120Hz

Case Size ΦD x L (mm)

Specifications are subject to change without notice. Should a safety or technical concern arise regarding the product, please be sure to contact our sales offices or agents immediately.

SAMXON®
Aluminum Electrolytic Capacitors

Lug / Snap-in Terminal Type (插入/自立型), Wide Temperature (寬溫度)

STANDARD RATINGS

Voltage (Code)		400V (2G)		420V (2M)		450V (2W)	
Cap. (μF)	Code	Case Size	Ripple Current	Case Size	Ripple Current	Case Size	Ripple Current
47	476					20 x 25	0.39
56	566	20 x 25	0.51	20 x 25	0.51	20 x 30	0.51
						22 x 25	0.50
68	686	20 x 30	0.56	20 x 30	0.56	20 x 35	0.56
		22 x 25	0.55	22 x 25	0.55	22 x 30	0.53
						25 x 25	0.53
82	826	20 x 30	0.64	20 x 35	0.64	20 x 35	0.64
		22 x 25	0.64	22 x 25	0.64	22 x 30	0.64
						25 x 25	0.64
100	107	20 x 35	0.70	20 x 35	0.70	22 x 30	0.65
		22 x 30	0.70	22 x 30	0.70	25 x 25	0.64
		25 x 25	0.70	25 x 25	0.70	30 x 25	0.72
120	127	20 x 40	0.75	20 x 40	0.75	22 x 40	0.80
		22 x 30	0.70	22 x 30	0.70	25 x 30	0.80
				30 x 25	0.78	30 x 25	0.80
150	157	22 x 40	0.88	22 x 40	0.88	22 x 40	0.84
		25 x 30	0.83	25 x 35	0.88	25 x 35	0.88
		30 x 25	0.88	30 x 25	0.88	30 x 30	0.88
180	187	22 x 40	0.93	22 x 40	0.90	25 x 40	1.00
				25 x 35	0.92		
		25 x 35	0.98	30 x 30	0.96	30 x 30	1.00
		30 x 30	0.98	35 x 25	0.94		
220	227	22 x 45	1.05	22 x 45	1.05	25 x 45	1.12
		25 x 35	1.04	30 x 30	1.03	30 x 35	1.12
		30 x 30	1.10	35 x 25	1.10	35 x 30	1.12
270	277	25 x 50	1.29	25 x 50	1.37	30 x 40	1.28
		30 x 35	1.22	30 x 35	1.18	35 x 35	1.28
		35 x 30	1.22	35 x 30	1.22		
330	337	30 x 45	1.55	30 x 45	1.49	30 x 45	1.39
		35 x 30	1.44	35 x 30	1.36	35 x 40	1.45
390	397	30 x 45	1.60	30 x 45	1.60	35 x 40	1.55
		35 x 35	1.60	35 x 40	1.66		
470	477	35 x 40	1.90	35 x 40	1.81	35 x 50	1.85
560	567	35 x 45	2.12				

Maximum Allowable Ripple Current (Arms) at 105˚C 120Hz

Case Size ΦD x L (mm)

Specifications are subject to change without notice. Should a safety or technical concern arise regarding the product, please be sure to contact our sales offices or agents immediately.

STANDARD RATINGS

Voltage (Code)		500V (2H)		550V (25)		600V (26)	
Cap. (μF)	Code	Case Size	Ripple Current	Case Size	Ripple Current	Case Size	Ripple Current
47	476	22 x 25	0.35				
56	566	22 x 25	0.38				
68	686	22 x 30	0.45				
82	826	22 x 35	0.54				
100	107	22 x 35	0.56				
120	127	22 x 40	0.64				
150	157	25 x 40	0.76				
180	187	30 x 35	0.86	30 x 40	0.93	30 x 50	0.90
				35 x 35	0.93	35 x 45	0.90
220	227	30 x 40	0.97	30 x 50	1.10	35 x 45	1.05
						35 x 50	1.05
270	277	30 x 45	1.12	35 x 40	1.21	35 x 50	1.24
330	337	30 x 45	1.36	35 x 50	1.40	35 x 60	1.48
		35 x 40	1.40				
390	397	30 x 50	1.50	35 x 55	1.65	35 x 65	1.67
		35 x 50	1.65	40 x 45	1.65	40 x 50	1.61
470	477	35 x 50	1.79	35 x 60	1.89	35 x 70	1.89
		35 x 60	1.93	35 x 70	2.02	40 x 60	1.91
560	567	35 x 60	2.10	35 x 70	2.20	35 x 90	2.31
		40 x 50	2.11	40 x 60	2.22	40 x 70	2.22
680	687	35 x 70	2.49	35 x 80	2.58	40 x 80	2.50
		40 x 60	2.51	40 x 70	2.62	45 x 70	2.52
820	827	35 x 70	2.90	35 x 90	2.90	40 x 90	2.79
		40 x 60	2.96	40 x 70	2.88	50 x 70	2.80
1000	108	40 x 80	3.45	40 x 90	3.44	45 x 85	3.01
		45 x 70	3.48	50 x 70	3.50	50 x 70	3.02
1200	128	40 x 90	3.90	45 x 85	3.84	45 x 100	3.40
		45 x 85	4.06	50 x 80	3.97	50 x 85	3.40
		50 x 80	4.10				
1500	158	45 x 100	4.80	50 x 90	4.68	50 x 100	4.16
		50 x 90	4.90				
1800	188	50 x 100	5.60	50 x 105	5.48		

Maximum Allowable Ripple Current (Arms) at 85˚C 120Hz

Case Size ΦD x L (mm)

Specifications are subject to change without notice. Should a safety or technical concern arise regarding the product, please be sure to contact our sales offices or agents immediately.

SAMXON®
Aluminum Electrolytic Capacitors

Lug / Snap-in Terminal Type (插入/自立型), Withstanding Overvoltage Design (耐過電壓品)

FEATURES

- Doesn't spark with DC over voltage.
- Load life: 2,000 hours at 105˚C.

SPECIFICATIONS

Item	Performance Characteristics
Operating Temperature Range	-25 to +105˚C
Rated Working Voltage Range	200 to 450V
Nominal Capacitance Range	56 to 1200μF
Capacitance Tolerance	±20% at 120Hz, +20˚C
Leakage Current	I ≤3$\sqrt{CV}$ (μA) after 5 minutes application of rated working voltage at +20˚C
tan δ (120Hz, +20˚C)	Working Voltage (V): 200, 250, 400, 450 tan δ (max.): 0.15, 0.15, 0.20, 0.20
Low Temperature Characteristics	Impedance ratio max. at 120Hz Rated Voltage (V): 200, 250, 400, 450 Z-25˚C / Z+20˚C: 8, 8, 8, 8
High Temperature Loading	Test time : 2,000 hours Test temperature : +105˚C Test conditions : Rated DC working voltage with rated ripple current Post test requirements at +20˚C Leakage current : ≤Initial specified value Cap. change : within ±20% of the initial measured value tan δ : ≤200% of the initial specified value
Shelf Life	At +105˚C no voltage applied after 1,000 hours and then being stabilized at +20˚C the capacitors shall meet the following limits Leakage current : ≤Initial specified value Cap. change : within ±15% of the initial measured value tan δ : ≤150% of the initial specified value
Industrial Standard	JIS C - 5101-4 (IEC 60384-4)

RIPPLE CURRENT MULTIPLIER

Frequency Coefficient

Coefficient / Freq. (Hz) / Rated Voltage	60	120	1k	10k~50k
200~250V	0.80	1.00	1.25	1.47
400~450V	0.80	1.00	1.30	1.47

PART NUMBER SYSTEM (EXAMPLE : 200V 220μF)

1	2 3	4 5 6	7	8 9	10	11 12	13 14
E	UP	227	M	2D	N	25	SW

- Type (Terminal Code)
- Case Length (25mm)
- Diameter (22mm)
- Voltage (200V)
- Tolerance (±20%)
- Capacitance (220μF)
- Series
- E-CAP

STANDARD RATINGS

Voltage (Code)		200V (2D)		250V (2E)		400V (2G)		450V (2W)	
Cap. (μF)	Code	Case Size	Ripple Current	Case Size	Ripple Current	Case Size	Ripple Current	Case Size	Ripple Current
56	566					22 x 25	0.45		
68	686					22 x 25	0.51		
82	856					22 x 30	0.58		
100	107					22 x 30	0.66		
120	127			22 x 25	0.68	22 x 35	0.76		
						25 x 30	0.76		
150	157					22 x 40	0.85		
						25 x 35	0.85		
						30 x 30	0.85		
180	187	22 x 25	0.82	22 x 30	0.87	22 x 45	0.94	30 x 35	1.00
						25 x 40	0.95		
				25 x 25	0.93	30 x 30	0.95		
220	227	22 x 25	0.90	22 x 30	1.00	25 x 40	1.24	30 x 40	1.20
						30 x 35	1.24		
						35 x 30	1.24		
270	277	22 x 30	1.02	22 x 35	1.14	25 x 50	1.30		
				25 x 30	1.13	30 x 40	1.30		
				30 x 25	1.25	35 x 30	1.30		
330	337	22 x 35	1.20	22 x 40	1.28	30 x 45	1.47		
		25 x 30	1.20	25 x 35	1.29	35 x 35	1.47		
390	397	22 x 35	1.35	22 x 45	1.42			35 x 45	1.60
				25 x 40	1.46				
		25 x 30	1.35	30 x 30	1.52				
470	477	22 x 40	1.45	25 x 45	1.64				
		25 x 35	1.45						
		30 x 30	1.47	30 x 35	1.67				
560	567	22 x 45	1.62	25 x 50	1.82				
		25 x 35	1.60	30 x 40	1.87				
		30 x 30	1.60	35 x 30	1.99				
680	687	25 x 40	1.82	30 x 45	2.12				
		30 x 35	1.81						
		35 x 30	1.86	35 x 35	2.19				
820	827	25 x 50	2.11	30 x 50	2.39				
		30 x 40	2.11						
		35 x 30	2.11	35 x 40	2.42				
1000	108	30 x 45	2.40						
		35 x 35	2.40						
1200	128	30 x 50	2.69						
		35 x 40	2.65						

Maximum Allowable Ripple Current (Arms) at 105°C 120Hz

Case Size ΦD x L (mm)

DC OVERVOLTAGE TEST CONDITIONS

The vent will operate and the capacitor shall become an open circuit without burning materials when the following test DC voltage is applied.

- Test DC voltage

Rated voltage	Normal Capacitance	Current Limit	Test Voltage
200Vdc	<330	4A	300/375Vdc
	330μF ≤C <470μF	5A	
	≥470μF	7A	
250Vdc	<330μF	4A	350/450Vdc
	330μF ≤C <470μF	5A	
	<470μF	7A	
400Vdc	<100μF	2A	500/600Vdc
	100μF ≤C <220μF	4A	
	≥220μF	7A	
450Vdc	<100μF	2A	550/675Vdc
	100μF ≤C <220μF	4A	
	≥220μF	7A	

● Test circuit

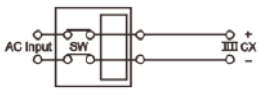

Constant DC voltage/current power supply

Specifications are subject to change without notice. Should a safety or technical concern arise regarding the product, please be sure to contact our sales offices or agents immediately.

SAMXON®
Aluminum Electrolytic Capacitors

Lug / Snap-in Terminal Type (插入/自立型), Long Life Assurance (長壽命)

FEATURES

- Highly reliable capacitors that withstand under high ripple current.
- Two or three dimensions with same ratings.
- Aluminum case designed explosion-proof vent.
- Best for switching power supplies.
- Load life: 3,000 hours.
- AEC-Q200 compliant. Please contact sales department for automative specific PN.

SPECIFICATIONS

Item	Performance Characteristics	
Operating Temperature Range	-40 to +105˚C	-25 to +105˚C
Rated Working Voltage Range	10 to 100V	160 to 600V
Nominal Capacitance Range	47 to 56000μF	
Capacitance Tolerance	±20% at 120Hz, +20˚C	
Leakage Current	I ≤3$\sqrt{CV}$ (μA) after 5 minutes application of rated working voltage at +20˚C	
tan δ (120Hz, +20˚C)		

Working Voltage (V)	10	16	25	35	50	63	80	100
tan δ (max.)	0.55	0.50	0.45	0.40	0.35	0.30	0.25	0.20

Working Voltage (V)	160~220	250	315~450	500~600
tan δ (max.)	0.15	0.15	0.25	0.2

For capacitance value >33000μF, add following calculated value: $\frac{\text{(rated capacitance) - 33000μF}}{\text{10000μF}}$ x 0.1

Low Temperature Characteristics

Impedance ratio max. at 120Hz

Working Voltage (V)	10	16	25	35	50	63	80	100
Z-25˚C / Z+20˚C	6	6	6	6	4	3	3	3
Z-40˚C / Z+20˚C	15	15	15	15	15	15	15	15

Working Voltage (V)	160	200~220	250	315~385	400~420	450~600
Z-25˚C / Z+20˚C	8	8	8	8	8	8

High Temperature Loading

Test time : 3,000 hours
Test temperature : +105˚C
Test conditions : Rated DC working voltage with rated ripple current

Post test requirements at +20˚C
Leakage current : ≤Initial specified value
Cap. change : within ±20% of the initial measured value
tan δ : ≤200% of the initial specified value

Shelf Life

At +105˚C no voltage applied after 1,000 hours and then being stabilized at +20˚C the capacitors shall meet the following limits
Leakage current : ≤Initial specified value
Cap. change : within ±15% of the initial measured value
tan δ : ≤150% of the initial specified value

Industrial Standard: JIS C - 5101-4 (IEC 60384-4)

RIPPLE CURRENT MULTIPLIER

Frequency Coefficient

Coefficient / Freq. (Hz) / Rated Voltage	60	120	1k	10k~50k
10~100V	0.90	1.00	1.15	1.25
160~250V	0.80	1.00	1.25	1.47
315~450V	0.80	1.00	1.30	1.47
500~600V	0.80	1.00	1.28	1.41

PART NUMBER SYSTEM (EXAMPLE : 400V 100μF)

1	2 3	4 5 6	7	8 9	10	11 12	13 14
E	KP	107	M	2G	O	25	S W

- Type (Terminal Code)
- Case Length (25mm)
- Diameter (25mm)
- Voltage (400V)
- Tolerance (±20%)
- Capacitance (100μF)
- Series
- E-CAP

STANDARD RATINGS

Voltage (Code)		10V (1A)		16V (1C)		25V (1E)		35V (1V)	
Cap. (μF)	Code	Case Size	Ripple Current	Case Size	Ripple Current	Case Size	Ripple Current	Case Size	Ripple Current
2700	278							20 x 25	1.62
3300	338							20 x 30	1.94
								22 x 25	1.90
3900	398					20 x 25	1.72	20 x 35	2.02
								22 x 30	2.00
4700	478					20 x 30	2.04	20 x 40	2.21
						22 x 25	2.00	22 x 35	2.20
								25 x 25	2.20
5600	568			20 x 25	1.89	20 x 35	2.23	22 x 35	2.40
						22 x 30	2.20	25 x 30	2.40
6800	688	20 x 25	1.41	20 x 30	2.25	20 x 40	2.72	22 x 40	2.60
				22 x 25	2.20	22 x 30	2.40	25 x 35	2.60
						25 x 25	2.40	30 x 25	2.78
8200	828	20 x 30	1.67	20 x 35	2.43	22 x 35	2.70	22 x 50	2.90
						25 x 30	2.70	25 x 40	2.90
				22 x 30	2.40	30 x 25	2.70	30 x 30	2.90
10000	109	20 x 30	1.88	20 x 40	2.79	22 x 40	3.00	25 x 45	3.20
				22 x 30	2.60	25 x 35	3.00		
		22 x 25	1.80	25 x 25	2.60	30 x 30	3.00	30 x 35	3.20
12000	129	20 x 35	2.23	22 x 35	2.90	22 x 50	3.20	25 x 50	3.50
		22 x 30	2.20	25 x 30	2.90	25 x 40	3.20	30 x 40	3.50
		25 x 25	2.20			30 x 30	3.20	35 x 30	3.50
15000	159	20 x 40	2.31	22 x 40	3.20	25 x 45	3.60	30 x 45	3.90
		22 x 35	2.30	25 x 35	3.20	30 x 35	3.60		
		25 x 25	2.30	30 x 25	3.11	35 x 30	3.60	35 x 35	3.90
18000	189	22 x 40	2.52	22 x 45	3.50	30 x 40	3.90	35 x 40	4.51
		25 x 30	2.40	25 x 40	3.50				
		30 x 25	2.49	30 x 30	3.50	35 x 35	3.90		
22000	229	22 x 45	2.60	25 x 45	3.80	30 x 45	4.30	35 x 45	5.24
		25 x 35	2.60	30 x 30	3.80				
		30 x 25	2.60	35 x 30	3.80	35 x 35	4.30		
27000	279	22 x 45	3.19	25 x 50	4.20	35 x 45	4.80		
		25 x 40	3.10	30 x 35	4.20				
		30 x 30	3.10	35 x 30	4.20				
33000	339	25 x 45	3.40	30 x 40	4.70	35 x 50	5.55		
		30 x 35	3.40						
		35 x 30	3.40	35 x 35	4.70				
39000	399	30 x 40	3.79	30 x 45	4.90				
		35 x 30	3.70	35 x 40	5.10				
47000	479	30 x 45	4.26	30 x 50	5.27				
		35 x 35	4.20	35 x 45	5.50				
56000	569	35 x 40	5.00						

Maximum Allowable Ripple Current (Arms) at 105˚C 120Hz

Case Size ΦD x L (mm)

Specifications are subject to change without notice. Should a safety or technical concern arise regarding the product, please be sure to contact our sales offices or agents immediately.

STANDARD RATINGS

Voltage (Code)		50V (1H)		63V (1J)		80V (1K)		100V (2A)	
Cap. (μF)	Code	Case Size	Ripple Current	Case Size	Ripple Current	Case Size	Ripple Current	Case Size	Ripple Current
560	567							20 x 25	0.95
680	687							20 x 30	1.15
								22 x 25	1.09
820	827					20 x 25	1.04	20 x 35	1.31
								22 x 30	1.40
1000	108			20 x 25	1.21	20 x 30	1.24	20 x 35	1.43
						22 x 25	1.19	22 x 30	1.47
								25 x 25	1.45
1200	128			20 x 30	1.43	20 x 35	1.43	20 x 40	1.61
				22 x 25	1.40	22 x 30	1.50	22 x 35	1.69
								25 x 30	1.68
1500	158	20 x 25	1.29	20 x 35	1.52	20 x 35	1.57	22 x 40	1.97
				22 x 30	1.50	22 x 30	1.59	25 x 35	1.98
						25 x 25	1.59	30 x 25	1.95
1800	188	20 x 30	1.53	20 x 35	1.72	20 x 40	1.77	22 x 45	2.23
		22 x 25	1.50	22 x 30	1.70	22 x 35	1.79	25 x 40	2.20
				25 x 25	1.70	25 x 30	1.71	30 x 30	2.20
2200	228	20 x 35	1.72	20 x 40	2.01	22 x 40	2.03	25 x 45	2.53
		22 x 30	1.70	22 x 35	2.00	25 x 35	2.10	30 x 35	2.55
				25 x 30	2.00	30 x 25	1.98	35 x 30	2.60
2700	278	20 x 35	1.82	22 x 40	2.20	22 x 45	2.39	25 x 50	2.82
		22 x 30	1.80	25 x 35	2.20	25 x 40	2.35	30 x 40	2.86
		25 x 25	1.80	30 x 25	2.20	30 x 30	2.35	35 x 35	2.90
3300	338	20 x 40	2.01	22 x 45	2.60	25 x 45	2.64	30 x 45	3.30
		22 x 35	2.00	25 x 35	2.39	30 x 35	2.61	35 x 35	3.25
		25 x 30	2.00	30 x 30	2.50	35 x 30	2.60		
3900	398	22 x 40	2.23	25 x 40	2.57	25 x 50	2.92	30 x 50	3.60
		25 x 30	2.20	30 x 35	2.70	30 x 40	2.82	35 x 40	3.67
		30 x 25	2.20			35 x 30	2.97		
4700	478	22 x 45	2.50	25 x 50	3.00	30 x 45	3.34	35 x 45	3.80
		25 x 35	2.43	30 x 40	3.00	35 x 35	3.38		
		30 x 30	2.50	35 x 30	3.00				
5600	568	22 x 50	2.80	30 x 40	3.22	30 x 50	3.80	35 x 50	4.05
		25 x 40	2.80	35 x 35	3.30	35 x 40	3.80		
		30 x 30	2.76						
6800	688	25 x 45	3.30	30 x 50	3.86	35 x 45	3.90		
		30 x 35	3.30	35 x 40	3.84				
		35 x 30	3.30						
8200	828	30 x 40	3.71	35 x 45	4.43	35 x 50	4.20		
		35 x 35	3.85						
10000	109	30 x 50	4.51	35 x 50	5.11				
		35 x 40	4.49						
12000	129	35 x 45	4.56						
15000	159	35 x 50	4.80						

Maximum Allowable Ripple Current (Arms) at 105˚C 120Hz

Case Size ΦD x L (mm)

Specifications are subject to change without notice. Should a safety or technical concern arise regarding the product, please be sure to contact our sales offices or agents immediately.

STANDARD RATINGS

Voltage (Code)		160V (2C)		180V (2P)		200V (2D)		220V (2N)	
Cap. (μF)	Code	Case Size	Ripple Current	Case Size	Ripple Current	Case Size	Ripple Current	Case Size	Ripple Current
180	187							20 x 25	0.90
220	227			20 x 25	1.00	20 x 25	1.00	20 x 30	1.00
								22 x 25	1.00
270	277	20 x 25	1.10	20 x 30	1.10	20 x 30	1.10	20 x 35	1.15
				22 x 25	1.00	22 x 25	1.10	22 x 30	1.15
330	337	20 x 30	1.20	20 x 35	1.20	20 x 35	1.20	20 x 40	1.25
		22 x 25	1.20	22 x 30	1.20	22 x 30	1.25	22 x 35	1.25
						25 x 25	1.25	25 x 25	1.25
390	397	20 x 35	1.42	20 x 35	1.30	20 x 40	1.31	20 x 45	1.40
		22 x 30	1.30	22 x 30	1.35	22 x 35	1.35	22 x 35	1.40
				25 x 25	1.35	25 x 30	1.35	25 x 25	1.40
470	477	20 x 40	1.34	20 x 40	1.40	22 x 40	1.50	22 x 40	1.51
		22 x 30	1.55	22 x 35	1.50	25 x 30	1.50	25 x 30	1.44
		25 x 25	1.55	25 x 30	1.50	30 x 25	1.50	30 x 25	1.50
560	567	22 x 35	1.67	22 x 40	1.67	22 x 45	1.67	25 x 35	1.64
		25 x 30	1.67	25 x 30	1.67	25 x 35	1.70	30 x 30	1.70
				30 x 25	1.67	30 x 25	1.67	35 x 25	1.71
680	687	22 x 40	1.82	22 x 45	1.78	22 x 50	1.78	25 x 40	1.84
		25 x 35	1.85	25 x 35	1.78	25 x 40	1.82	30 x 35	1.93
		30 x 25	1.82	30 x 30	1.78	30 x 30	1.78	35 x 30	1.89
820	827	22 x 45	2.04	22 x 50	2.04	25 x 45	2.10	25 x 45	2.08
		25 x 40	2.04	25 x 40	2.04	30 x 35	2.04	30 x 40	2.19
		30 x 30	2.04	30 x 30	2.04	35 x 30	2.04	35 x 30	2.16
1000	108	25 x 45	2.40	25 x 45	2.30	25 x 50	2.42	30 x 45	2.50
		30 x 35	2.25	30 x 35	2.30	30 x 40	2.30	35 x 35	2.44
				35 x 30	2.30	35 x 35	2.30		
1200	128	25 x 50	2.62	30 x 40	2.55	30 x 45	2.65	35 x 40	2.79
		30 x 40	2.49	35 x 35	2.55	35 x 35	2.65		
		35 x 30	2.49						
1500	158	30 x 45	2.84	30 x 45	2.90	35 x 40	3.08	35 x 45	3.22
		35 x 35	2.84	35 x 40	2.90				
1800	188	30 x 50	3.32	35 x 45	3.30	35 x 45	3.48		
		35 x 40	3.00						
2200	228	35 x 45	3.50	35 x 50	3.65				

Maximum Allowable Ripple Current (Arms) at 105°C 120Hz

Case Size ΦD x L (mm)

Specifications are subject to change without notice. Should a safety or technical concern arise regarding the product, please be sure to contact our sales offices or agents immediately.

STANDARD RATINGS

Voltage (Code)		250V (2E)		315V (2F)		350V (2V)		385V (2Y)	
Cap. (μF)	Code	Case Size	Ripple Current	Case Size	Ripple Current	Case Size	Ripple Current	Case Size	Ripple Current
56	566							20 x 25	0.37
68	686					20 x 25	0.47	20 x 30	0.44
								22 x 25	0.45
82	826			20 x 25	0.64	20 x 30	0.54	20 x 30	0.50
								22 x 30	0.52
100	107			20 x 30	0.69	20 x 30	0.60	20 x 35	0.56
						22 x 25	0.69	22 x 30	0.58
								25 x 25	0.57
120	127			20 x 30	0.75	20 x 35	0.68	20 x 40	0.66
				22 x 25	0.75	22 x 30	0.75	22 x 35	0.68
						25 x 25	0.75	25 x 30	0.68
150	157	20 x 25	0.79	20 x 35	0.82	20 x 40	0.78	22 x 40	0.79
				22 x 30	0.82	22 x 35	0.82	25 x 30	0.78
				25 x 25	0.82	25 x 30	0.83	30 x 25	0.75
180	187	20 x 30	0.90	20 x 40	0.90	22 x 40	0.92	22 x 45	0.89
		22 x 25	0.88	22 x 35	0.92	25 x 30	0.92	25 x 35	0.86
				25 x 30	0.93	30 x 25	0.90	30 x 30	0.88
220	227	20 x 35	1.00	22 x 40	1.04	22 x 50	1.05	22 x 50	1.01
		22 x 30	1.00	25 x 30	1.04	25 x 35	1.04	25 x 40	1.00
		25 x 25	1.08	30 x 25	1.04	30 x 30	1.02	30 x 30	1.00
270	277	20 x 40	1.10	22 x 45	1.16	22 x 50	1.16	25 x 45	1.13
		22 x 35	1.18	25 x 35	1.16	25 x 40	1.18	30 x 40	1.14
		25 x 30	1.27	30 x 25	1.16	30 x 30	1.17	35 x 30	1.10
330	337	22 x 40	1.30	22 x 50	1.33	25 x 45	1.29	30 x 45	1.31
		25 x 30	1.30	25 x 40	1.33	30 x 35	1.34	35 x 35	1.32
		30 x 25	1.35	30 x 30	1.33	35 x 30	1.22		
390	397	22 x 45	1.49	25 x 45	1.47	25 x 50	1.51	30 x 50	1.48
		25 x 35	1.49	30 x 35	1.47	30 x 40	1.51	35 x 40	1.48
		30 x 30	1.49	35 x 30	1.47	35 x 35	1.47		
470	477	22 x 50	1.65	30 x 40	1.70	30 x 45	1.65	35 x 45	1.76
		25 x 40	1.65	35 x 30	1.70	35 x 35	1.69		
		30 x 30	1.65						
560	567	25 x 45	1.80	30 x 45	2.05	30 x 50	1.85	35 x 50	1.95
		30 x 35	1.80	35 x 35	2.05	35 x 40	1.90		
680	687	25 x 50	2.03	35 x 40	2.17	35 x 45	2.20		
		30 x 40	2.00						
		35 x 30	2.00						
820	827	30 x 45	2.30	35 x 45	2.20				
		35 x 35	2.30						
1000	108	30 x 50	2.70						
		35 x 40	2.69						
1200	128	35 x 45	3.09						

Maximum Allowable Ripple Current (Arms) at 105˚C 120Hz

Case Size ΦD x L (mm)

Specifications are subject to change without notice. Should a safety or technical concern arise regarding the product, please be sure to contact our sales offices or agents immediately.

STANDARD RATINGS

Voltage (Code)		400V (2G)		420V (2M)		450V (2W)	
Cap. (μF)	Code	Case Size	Ripple Current	Case Size	Ripple Current	Case Size	Ripple Current
47	476					20 x 25	0.39
56	566	20 x 25	0.51	20 x 25	0.51	20 x 30	0.51
						22 x 25	0.50
68	686	20 x 30	0.56	20 x 30	0.56	20 x 35	0.56
		22 x 25	0.50	22 x 25	0.55	22 x 30	0.53
						25 x 25	0.53
82	826	20 x 30	0.64	20 x 35	0.64	20 x 35	0.64
		22 x 25	0.64	22 x 25	0.64	22 x 30	0.64
				25 x 25	0.58	25 x 25	0.64
100	107	20 x 35	0.70	20 x 35	0.70	22 x 35	0.69
		22 x 30	0.70	22 x 30	0.70	25 x 25	0.65
		25 x 25	0.70	25 x 25	0.70	30 x 25	0.72
120	127	20 x 40	0.75	20 x 40	0.75	22 x 40	0.80
		22 x 35	0.75	22 x 35	0.75	25 x 30	0.80
				25 x 30	0.75		
		25 x 30	0.76	30 x 25	0.78	30 x 25	0.80
150	157	22 x 40	0.88	22 x 40	0.88	22 x 45	0.88
		25 x 30	0.83	25 x 35	0.88	25 x 35	0.88
		30 x 25	0.88	30 x 25	0.88	30 x 30	0.88
180	187	22 x 45	0.98	22 x 45	0.95	25 x 40	1.00
				25 x 40	0.97		
		25 x 35	0.98	30 x 30	0.96	30 x 30	1.00
		30 x 30	0.98	35 x 25	0.94		
220	227	22 x 50	1.10	25 x 45	1.13	25 x 45	1.12
		25 x 40	1.10	30 x 35	1.10	30 x 35	1.12
		30 x 30	1.10	35 x 25	1.10	35 x 30	1.12
270	277	25 x 50	1.29	25 x 50	1.37	30 x 40	1.28
		30 x 35	1.22	30 x 40	1.25	35 x 35	1.28
		35 x 30	1.22	35 x 30	1.22		
330	337	30 x 45	1.55	30 x 45	1.49	30 x 50	1.45
		35 x 30	1.44	35 x 35	1.45	35 x 40	1.45
390	397	30 x 45	1.60	30 x 50	1.67	35 x 40	1.55
		35 x 35	1.60	35 x 40	1.66		
470	477	35 x 40	1.90	35 x 45	1.90	35 x 50	1.85
560	567	35 x 45	2.12				

Maximum Allowable Ripple Current (Arms) at 105˚C 120Hz

Case Size ΦD x L (mm)

Specifications are subject to change without notice. Should a safety or technical concern arise regarding the product, please be sure to contact our sales offices or agents immediately.

STANDARD RATINGS

Voltage (Code)		500V (2H)		550V (25)		600V (26)	
Cap. (μF)	Code	Case Size	Ripple Current	Case Size	Ripple Current	Case Size	Ripple Current
150	157	25 x 45	0.86	25 x 50	0.86	30 x 50	0.78
		30 x 40	0.90	30 x 45	0.90	35 x 45	0.82
		35 x 35	0.90	35 x 40	0.92	35 x 50	0.86
180	187	25 x 50	1.00	30 x 50	1.06	30 x 60	0.92
		30 x 40	1.02	35 x 40	1.04	35 x 45	0.90
220	227	30 x 45	1.18	30 x 60	1.34	35 x 50	1.12
		35 x 35	1.12	35 x 40	1.26		
270	277	30 x 50	1.34	30 x 60	1.48	35 x 50	1.30
		35 x 40	1.34	35 x 50	1.50		
330	337	30 x 60	1.61	30 x 60	1.64	35 x 60	1.58
		35 x 40	1.50	35 x 50	1.68	40 x 50	1.58
390	397	30 x 60	1.75	35 x 60	1.83	35 x 65	1.78
		35 x 50	1.76	40 x 50	1.83	40 x 50	1.72
470	477	35 x 50	1.93	35 x 60	2.00	35 x 70	2.02
		40 x 40	1.90	40 x 50	2.00	40 x 60	2.04
560	567	35 x 60	2.28	35 x 70	2.34	40 x 70	2.26
		40 x 50	2.27	40 x 60	2.36		
680	687	35 x 70	2.68	40 x 70	2.78	45 x 70	2.60
		40 x 60	2.70	45 x 60	2.78		
820	827	40 x 70	3.18	45 x 70	3.26	50 x 70	2.85
		45 x 60	3.18	50 x 60	3.25		
1000	108	40 x 80	3.72	45 x 90	4.02	50 x 80	3.15
		45 x 70	3.75	50 x 80	4.05		
1200	128	40 x 90	4.30	45 x 80	4.18	50 x 90	3.62
		45 x 80	4.35	50 x 80	4.44		
		50 x 70	4.36				
1500	158	45 x 90	4.90	50 x 90	5.23	50 x 100	4.40
		50 x 90	5.20	50 x 100	5.48		
1800	188	50 x 105	5.90	50 x 105	5.80	50 x 110	4.85

Maximum Allowable Ripple Current (Arms) at 85˚C 120Hz

Case Size ΦD x L (mm)

Specifications are subject to change without notice. Should a safety or technical concern arise regarding the product, please be sure to contact our sales offices or agents immediately.

FEATURES

- High ripple current.
- Two or three dimensions with same ratings.
- Aluminum case designed explosion-proof vent.
- Best for switching power supplies.
- Load life with ripple current : 105˚C 5,000 hours.
- AEC-Q200 compliant. Please contact sales department for automative specific PN.

SPECIFICATIONS

Item	Performance Characteristics	
Operating Temperature Range	-40 to +105˚C	-25 to +105˚C
Rated Working Voltage Range	10 to 100V	160 to 550V
Nominal Capacitance Range	82 to 47000μF	
Capacitance Tolerance	±20% at 120Hz, +20˚C	
Leakage Current	I ≤3$\sqrt{CV}$ (μA) after 5 minutes application of rated working voltage at +20˚C	

tan δ (120Hz, +20˚C)

Working Voltage (V)	10	16	25	35	50	63~100
tan δ (max.)	0.60	0.45	0.30	0.25	0.20	0.15

Working Voltage (V)	160~400	420~550
tan δ (max.)	0.15	0.20

For capacitance value >33000μF, add following calculated value: $\frac{\text{(rated capacitance) - 33000μF}}{\text{10000μF}}$ x 0.1

Low Temperature Characteristics

Impedance ratio max. at 120Hz

Working Voltage (V)	10	16	25	35	50	63~100
Z-25˚C / Z+20˚C	6	6	6	6	4	3
Z-40˚C / Z+20˚C	15	15	15	15	15	15

Working Voltage (V)	160	250	315	350	400~420	450~550
Z-25˚C / Z+20˚C	8	8	8	8	8	8

High Temperature Loading

Test time : 5,000 hours
Test temperature : +105˚C
Test conditions : Rated DC working voltage with rated ripple current

Post test requirements at +20˚C
Leakage current : ≤Initial specified value
Cap. change : within ±20% of the initial measured value
tan δ : ≤200% of the initial specified value

Shelf Life

At +105˚C no voltage applied after 1,000 hours and then being stabilized at +20˚C the capacitors shall meet the following limits
Leakage current : ≤Initial specified value
Cap. change : within ±15% of the initial measured value
tan δ : ≤150% of the initial specified value

Industrial Standard	JIS C - 5101-4 (IEC 60384-4)

RIPPLE CURRENT MULTIPLIER

Frequency Coefficient

Coefficient / Freq. (Hz) / Rated Voltage	60	120	1k	10k~50k
10~100V	0.90	1.00	1.15	1.25
160~250V	0.80	1.00	1.25	1.47
315~450V	0.80	1.00	1.30	1.47
500~550V	0.80	1.00	1.30	1.41

PART NUMBER SYSTEM (EXAMPLE : 160V 2200μF)

1	2 3	4 5 6	7	8 9	10	11 12	13 14
E	EP	228	M	2C	Q	45	SW

- Type (Terminal Code)
- Case Length (45mm)
- Diameter (35mm)
- Voltage (160V)
- Tolerance (±20%)
- Capacitance (2200μF)
- Series
- E-CAP

STANDARD RATINGS

Voltage (Code)		10V (1A)		16V (1C)		25V (1E)		35V (1V)	
Cap. (μF)	Code	Case Size	Ripple Current	Case Size	Ripple Current	Case Size	Ripple Current	Case Size	Ripple Current
2200	228							22 x 25	1.10
3300	338							22 x 30	1.42
								25 x 25	1.41
3900	398					22 x 25	1.31	22 x 35	1.58
								25 x 30	1.58
4700	478					22 x 30	1.51	22 x 40	1.78
						25 x 25	1.51	30 x 25	1.77
5600	568			22 x 25	1.44	22 x 35	1.70	25 x 35	1.98
								30 x 30	1.98
								35 x 25	2.03
6800	688	22 x 25	1.30	22 x 30	1.66	22 x 40	1.92	22 x 50	2.26
				25 x 25	1.66	25 x 30	1.87	25 x 40	2.24
						30 x 25	1.90		
8200	828			22 x 35	1.87	25 x 35	2.14	25 x 50	2.57
						30 x 30	2.15	30 x 35	2.50
						35 x 25	2.19	35 x 30	2.55
10000	109	22 x 30	1.65	22 x 40	2.12	22 x 50	2.45	30 x 40	2.86
		25 x 25	1.64	25 x 30	2.07	25 x 40	2.43	35 x 35	2.88
				30 x 25	2.11				
12000	129	22 x 35	1.85	25 x 35	2.37	25 x 50	2.78	30 x 50	3.32
		25 x 30	1.85	30 x 30	2.37	30 x 35	2.70	35 x 40	3.30
		30 x 25	1.89	35 x 25	2.42	35 x 30	2.76		
15000	159	22 x 40	2.12	22 x 50	2.74	30 x 40	3.13		
		25 x 35	2.16	25 x 40	2.71	35 x 35	3.16		
18000	189	22 x 50	2.45	25 x 50	3.11	30 x 50	3.64	35 x 50	4.29
		25 x 40	2.43	30 x 35	3.02	35 x 40	3.61		
		30 x 30	2.37	35 x 30	3.09				
		35 x 25	2.42						
22000	229	30 x 35	2.73	30 x 40	3.46				
		35 x 30	2.79	35 x 35	3.49				
27000	279	25 x 50	3.11	30 x 50	4.07	35 x 50	4.70		
		30 x 40	3.13	35 x 40	4.04				
33000	339	35 x 35	3.49						
39000	399	30 x 50	3.99	35 x 50	5.16				
		35 x 40	3.96						
47000	479	35 x 50	4.62						

Maximum Allowable Ripple Current (Arms) at 105˚C 120Hz

Case Size ΦD x L (mm)

Specifications are subject to change without notice. Should a safety or technical concern arise regarding the product, please be sure to contact our sales offices or agents immediately.

STANDARD RATINGS

Voltage (Code)		50V (1H)		63V (1J)		80V (1K)		100V (2A)	
Cap. (μF)	Code	Case Size	Ripple Current	Case Size	Ripple Current	Case Size	Ripple Current	Case Size	Ripple Current
390	397							22 x 25	0.78
560	567							22 x 30	0.99
								25 x 25	0.98
680	687					22 x 25	0.97	22 x 35	1.12
820	827					22 x 30	1.12	22 x 40	1.26
								25 x 30	1.23
								30 x 25	1.25
1000	108			22 x 25	1.00	22 x 35	1.70	25 x 35	1.41
								30 x 30	1.42
						25 x 25	1.92	35 x 25	1.45
1200	128			22 x 30	1.15	22 x 40	1.42	22 x 50	1.60
						25 x 30	1.39	25 x 40	1.59
				25 x 25	1.15	30 x 25	1.41	30 x 35	1.61
1500	158	22 x 25	1.02	22 x 35	1.32	25 x 35	1.62	25 x 50	1.86
								30 x 40	1.87
								35 x 30	1.85
1800	188	22 x 30	1.17	22 x 40	1.49	22 x 50	1.84	35 x 35	2.07
				25 x 30	1.45	25 x 40	1.82		
		25 x 25	1.17			30 x 30	1.78		
				30 x 25	1.48	35 x 25	1.82		
2200	228	22 x 35	1.33	25 x 35	1.67	25 x 50	2.11	30 x 50	2.40
				30 x 30	1.68	30 x 35	2.05		
				35 x 25	1.71	35 x 30	2.09	35 x 40	2.39
2700	278	22 x 40	1.51	22 x 50	1.92	30 x 40	2.35	35 x 50	2.81
		25 x 30	1.47	25 x 40	1.90				
		30 x 25	1.50	30 x 35	1.93	35 x 35	2.37		
3300	338	25 x 35	1.70	25 x 50	2.20	30 x 50	2.75		
		30 x 30	1.70						
		35 x 25	1.74	35 x 30	2.18	35 x 40	2.73		
3900	398	22 x 50	1.91	30 x 40	2.41				
		25 x 40	1.89	35 x 35	2.43				
4700	478	30 x 35	2.11	30 x 50	2.80	35 x 50	3.46		
		35 x 30	2.16	35 x 40	2.78				
5600	568	25 x 50	2.38						
		30 x 40	2.39						
		35 x 35	2.41						
6800	688	30 x 50	2.79	35 x 50	3.55				
		35 x 40	2.78						
10000	109	35 x 50	3.57						

Maximum Allowable Ripple Current (Arms) at 105°C 120Hz

Case Size ΦD x L (mm)

Specifications are subject to change without notice. Should a safety or technical concern arise regarding the product, please be sure to contact our sales offices or agents immediately.

STANDARD RATINGS

Voltage (Code)		160V (2C)		200V (2D)		250V (2E)		315V (2F)	
Cap. (μF)	Code	Case Size	Ripple Current	Case Size	Ripple Current	Case Size	Ripple Current	Case Size	Ripple Current
150	157							22 x 30	0.86
180	187							22 x 35	0.98
								25 x 30	1.01
220	227					22 x 30	1.09	22 x 40	1.10
								30 x 25	1.17
270	277			22 x 25	1.10	22 x 35	1.28	22 x 45	1.24
								25 x 35	1.27
330	337					25 x 30	1.42	22 x 50	1.39
								25 x 40	1.45
								30 x 30	1.40
390	397	22 x 30	1.42	22 x 35	1.47	22 x 45	1.61	25 x 45	1.60
				25 x 30	1.50	25 x 35	1.53		
						30 x 30	1.62		
470	477			22 x 40	1.64	22 x 50	1.79	25 x 50	1.78
								30 x 40	1.81
								35 x 30	1.82
560	567	22 x 35	1.77	22 x 45	1.82	25 x 45	1.98	30 x 45	2.02
		25 x 30	1.81	25 x 35	1.82	30 x 35	1.95	35 x 35	2.00
				30 x 25	1.78				
680	687	22 x 40	1.98	22 x 50	1.90	25 x 50	2.21	30 x 50	2.21
		25 x 35	2.01	25 x 40	1.98	30 x 40	2.18	35 x 40	2.29
		30 x 25	1.96	30 x 30	1.98	35 x 30	2.15		
820	827	22 x 45	2.20	25 x 45	2.20	30 x 45	2.45	35 x 45	2.57
				30 x 35	2.22	35 x 35	2.38		
1000	108	25 x 45	2.65	25 x 50	2.46	30 x 50	2.68	35 x 50	2.89
		30 x 35	2.55	30 x 40	2.53	35 x 40	2.72		
		35 x 25	2.55	35 x 35	2.77				
1200	128	25 x 50	2.93	30 x 45	2.84	35 x 45	3.05		
		30 x 40	2.84	35 x 35	2.88				
		35 x 30	2.86						
1500	158	30 x 45	3.17	35 x 40	3.34	35 x 50	3.49		
		35 x 35	3.22						
1800	188	30 x 50	3.53	35 x 45	3.74				
		35 x 40	3.66						
2200	228	35 x 45	4.14						
2700	278	35 x 50	4.68						

Maximum Allowable Ripple Current (Arms) at 85˚C 120Hz

Case Size ΦD x L (mm)

Specifications are subject to change without notice. Should a safety or technical concern arise regarding the product, please be sure to contact our sales offices or agents immediately.

STANDARD RATINGS

Voltage (Code)		350V (2V)		400V (2G)		420V (2M)		450V (2W)	
Cap. (μF)	Code	Case Size	Ripple Current	Case Size	Ripple Current	Case Size	Ripple Current	Case Size	Ripple Current
82	826							22 x 30	0.64
100	107			22 x 30	0.71	22 x 30	0.71	22 x 35	0.74
								25 x 30	0.75
120	127	22 x 30	0.78	22 x 35	0.80	22 x 35	0.80	22 x 40	0.82
						25 x 30	0.83		
150	157	22 x 35	0.90	22 x 40	0.91	22 x 40	0.91	22 x 45	0.93
								25 x 35	0.94
				25 x 35	0.99			30 x 30	1.00
180	187	25 x 30	1.01	22 x 45	1.01	22 x 45	1.01	22 x 50	1.01
				25 x 35	1.03	25 x 40	1.10	25 x 40	1.03
				30 x 30	1.10	30 x 30	1.10	30 x 30	1.03
220	227	22 x 45	1.16	22 x 50	1.14	25 x 45	1.20	25 x 45	1.16
		25 x 35	1.14	25 x 40	1.19	30 x 35	1.21	30 x 35	1.17
		30 x 30	1.21			35 x 25	1.22	35 x 30	1.24
270	277	22 x 50	1.26	25 x 50	1.39	25 x 50	1.35	25 x 50	1.31
		25 x 40	1.31	30 x 35	1.35	30 x 40	1.37	30 x 40	1.33
		30 x 30	1.27			35 x 30	1.38	35 x 35	1.39
330	337	25 x 45	1.46	30 x 45	1.59	30 x 45	1.50	30 x 50	1.58
		30 x 35	1.43	35 x 30	1.52	35 x 35	1.54		
390	397	25 x 50	1.62	30 x 45	1.68	30 x 50	1.72	35 x 40	1.73
		30 x 40	1.60	35 x 35	1.67	35 x 40	1.73		
		35 x 35	1.76						
470	477	30 x 45	1.81	30 x 50	1.89	35 x 45	1.94	35 x 50	1.98
		35 x 35	1.83	35 x 40	1.90				
560	567	30 x 50	2.00	35 x 45	2.12	35 x 50	2.17		
		35 x 40	2.07						
680	687	35 x 45	2.34	35 x 50	2.39				
820	827	35 x 50	2.62						

Maximum Allowable Ripple Current (Arms) at 105°C 120Hz

Case Size ΦD x L (mm)

Specifications are subject to change without notice. Should a safety or technical concern arise regarding the product, please be sure to contact our sales offices or agents immediately.

STANDARD RATINGS

Voltage (Code)		500V (2H)		550V (25)	
Cap. (μF)	Code	Case Size	Ripple Current	Case Size	Ripple Current
100	107	22 x 45	0.67	25 x 40	0.70
		25 x 40	0.68	25 x 50	0.78
120	127	22 x 50	0.80	30 x 40	0.80
		25 x 40	0.78	35 x 30	0.78
150	157	25 x 45	0.92	25 x 50	0.89
		30 x 40	0.96	30 x 45	0.94
		35 x 30	0.94	35 x 35	0.93
180	187	25 x 50	1.04	30 x 50	1.08
		30 x 45	1.10	35 x 40	1.08
220	227	30 x 50	1.28	30 x 60	1.30
		35 x 40	1.28	35 x 50	1.30
270	277	30 x 50	1.40	30 x 60	1.44
		35 x 40	1.40	35 x 50	1.46
330	337	30 x 50	1.54	35 x 60	1.90
		35 x 45	1.60		
390	397	30 x 60	1.80	35 x 70	2.04
		35 x 50	1.82	40 x 60	2.08
470	477	30 x 60	1.98	35 x 70	2.22
		35 x 50	2.00	40 x 60	2.30
560	567	35 x 60	2.36	35 x 90	2.70
		35 x 70	2.50	40 x 80	2.76
680	687	35 x 80	2.88	40 x 90	3.20
		40 x 70	2.92	45 x 70	3.08
820	827	40 x 80	3.42	45 x 85	3.66
		45 x 75	3.54	50 x 70	3.58
1000	108	45 x 80	4.02	45 x 100	4.24
		50 x 70	4.20	50 x 85	4.18
1200	128	45 x 100	5.10	50 x 100	4.82
		50 x 80	4.90		

Maximum Allowable Ripple Current (Arms) at 85˚C 120Hz

Case Size ΦD x L (mm)

Specifications are subject to change without notice. Should a safety or technical concern arise regarding the product, please be sure to contact our sales offices or agents immediately.

Lug / Snap-in Terminal Type (插入/自立型), Long Life (長壽命), Low Impedance (低阻抗)

FEATURES

- High ripple current and high reliability.
- Low equivalent series resistance ESR.
- Different case sizes available for each capacitance value.
- Load life with ripple current : 5,000 hours.

SPECIFICATIONS

Item	Performance Characteristics	
Operating Temperature Range	-40 to +105˚C	-25 to +105˚C
Rated Working Voltage Range	10 to 100V	200 to 450V
Nominal Capacitance Range	100 to 33000μF	
Capacitance Tolerance	±20% at 120Hz, +20˚C	
Leakage Current	I ≤3$\sqrt{CV}$ (μA) after 5 minutes application of rated working voltage at +20˚C	

tan δ (120Hz, +20˚C)

Working Voltage (V)	10	16	25	35	50	63~100	200~400	450
tan δ (max.)	0.60	0.45	0.30	0.25	0.20	0.15	0.15	0.20

Low Temperature Characteristics

Impedance ratio max. at 120Hz

Working Voltage (V)	10	16	25	35	50	63~100
Z-25˚C / Z+20˚C	6	6	6	6	4	3
Z-40˚C / Z+20˚C	15	15	15	15	15	15

Working Voltage (V)	200	250	400	450
Z-25˚C / Z+20˚C	8	8	8	8

High Temperature Loading

Test time : 5,000 hours
Test temperature : +105˚C
Test conditions : Rated DC working voltage with rated ripple current

Post test requirements at +20˚C
Leakage current : ≤Initial specified value
Cap. change : within ±20% of the initial measured value
tan δ : ≤200% of the initial specified value

Shelf Life

At +105˚C no voltage applied after 1,000 hours and then being stabilized at +20˚C the capacitors shall meet the following limits
Leakage current : ≤Initial specified value
Cap. change : within ±15% of the initial measured value
tan δ : ≤150% of the initial specified value

Industrial Standard: JIS C - 5101-4 (IEC 60384-4)

RIPPLE CURRENT MULTIPLIER

Frequency Coefficient

Coefficient / Freq. (Hz) / Rated Voltage	60	120	1k	10k~50k
10~100V	0.90	1.00	1.15	1.25
160~250V	0.80	1.00	1.25	1.47
315~450V	0.80	1.00	1.30	1.47

PART NUMBER SYSTEM (EXAMPLE : 250V 330μF)

1	2 3	4 5 6	7	8 9	10	11 12	13 14
E	FP	337	M	2 E	P	3 0	S W

- Type (Terminal Code)
- Case Length (30mm)
- Diameter (30mm)
- Voltage (250V)
- Tolerance (±20%)
- Capacitance (330μF)
- Series
- E-CAP

SAMXON®
Aluminum Electrolytic Capacitors

Lug / Snap-in Terminal Type (插入/自立型), Long Life (長壽命), Low Impedance (低阻抗)

STANDARD RATINGS

Voltage (Code)		10V (1A)			16V (1C)			25V (1E)		
Cap. (μF)	Code	Case Size	Impedance	Ripple Current	Case Size	Impedance	Ripple Current	Case Size	Impedance	Ripple Current
4700	478							22 x 30	57	1.6
								25 x 25	57	1.6
6800	688	22 x 25	78	1.4	22 x 30	49	1.8	25 x 30	43	1.9
10000	109	22 x 30	56	1.8	25 x 30	36	2.2	25 x 40	32	2.5
15000	159	22 x 40	39	2.3	25 x 40	26	2.8	30 x 40	23	3.2
22000	229	30 x 35	28	3.0	30 x 40	18	3.5			
33000	339	30 x 45	20	3.9						

Maximum Allowable Ripple Current (Arms) at 105˚C 120Hz
Maximum Impedance (mΩ) at 20˚C 20kHz
Case Size ΦD x L (mm)

Voltage (Code)		35V (1V)			50V (1H)			63V (1J)		
Cap. (μF)	Code	Case Size	Impedance	Ripple Current	Case Size	Impedance	Ripple Current	Case Size	Impedance	Ripple Current
1000	108							22 x 25	159	1.0
1500	158							22 x 35	106	1.4
2200	228	22 x 25	90	1.1	22 x 35	90	1.4	25 x 35	72	1.7
								30 x 30	85	1.8
3300	338	22 x 30	60	1.5	25 x 35	60	1.8	30 x 40	56	2.3
		25 x 25	60	1.5						
4700	478	22 x 40	48	1.9	30 x 35	45	2.2	35 x 35	45	2.7
6800	688	25 x 40	37	2.3	30 x 50	35	2.9	35 x 50	31	3.6
10000	109	30 x 40	28	2.9	35 x 45	26	3.6			
15000	159	35 x 40	20	3.8						
18000	189	35 x 45	18	4.3						

Maximum Allowable Ripple Current (Arms) at 105˚C 120Hz
Maximum Impedance (mΩ) at 20˚C 20kHz
Case Size ΦD x L (mm)

Voltage (Code)		80V (1K)			100V (2A)			200V (2D)		
Cap. (μF)	Code	Case Size	Impedance	Ripple Current	Case Size	Impedance	Ripple Current	Case Size	Impedance	Ripple Current
220	227							22 x 30	700	0.96
330	337							22 x 40	470	1.3
470	477							25 x 40	330	1.7
								30 x 30	330	1.7
560	567				25 x 25	190	1.0			
680	687				22 x 35	156	1.2	30 x 40	230	2.2
1000	108	25 x 25	133	1.3	25 x 35	106	1.4	35 x 45	160	3.1
					30 x 30	106	1.5			
1200	128	30 x 25	110	1.5						
1500	158	25 x 35	89	1.8	30 x 40	70	1.9	35 x 50	110	3.9
2200	228	30 x 35	60	2.0	30 x 50	60	2.3			
3300	338	35 x 35	48	2.8	35 x 50	40	3.0			
4700	478	35 x 45	34	3.4						

Maximum Allowable Ripple Current (Arms) at 105˚C 120Hz
Maximum Impedance (mΩ) at 20˚C 20kHz
Case Size ΦD x L (mm)

Voltage (Code)		250V (2E)			400V (2G)			450V (2W)		
Cap. (μF)	Code	Case Size	Impedance	Ripple Current	Case Size	Impedance	Ripple Current	Case Size	Impedance	Ripple Current
100	107				25 x 30	1090	0.7	22 x 45	1600	0.75
								30 x 30	1600	0.76
150	157				25 x 40	730	0.95	25 x 45	1070	1.0
					30 x 30	730	0.94	30 x 35	1070	0.99
220	227	25 x 30	700	1.0	30 x 40	500	1.3	30 x 45	730	1.3
					35 x 30	500	1.3	35 x 35	730	1.3
330	337	25 x 40	470	1.4	30 x 50	330	1.7	35 x 50	490	1.8
		30 x 30	470	1.4	35 x 40	330	1.7			
390	397				35 x 45	280	1.9	35 x 50	410	2.0
470	477	30 x 35	330	1.8	35 x 50	240	2.2			
680	687	30 x 45	230	2.3						
1000	108	35 x 45	160	3.1						

Maximum Allowable Ripple Current (Arms) at 105˚C 120Hz
Maximum Impedance (mΩ) at 20˚C 20kHz
Case Size ΦD x L (mm)

Specifications are subject to change without notice. Should a safety or technical concern arise regarding the product, please be sure to contact our sales offices or agents immediately.

FEATURES

- High ripple current and high reliability.
- Two or three dimensions with same ratings.
- Aluminum case designed explosion-proof vent.
- Best for ballast application.
- Load life with ripple current : 105˚C 7,000 hours.

SPECIFICATIONS

Item	Performance Characteristics	
Operating Temperature Range	-40 to +105˚C	-25 to +105˚C
Rated Working Voltage Range	160 to 250V	315 to 450V
Nominal Capacitance Range	39 to 2200μF	
Capacitance Tolerance	±20% at 120Hz, +20˚C	
Leakage Current	I ≤3$\sqrt{CV}$ (μA) after 5 minutes application of rated working voltage at +20˚C	

tan δ (120Hz, +20˚C)

Working Voltage (V)	160	200	250	315	350	400	450
tan δ (max.)	0.15	0.15	0.15	0.15	0.15	0.15	0.20

Low Temperature Characteristics

Impedance ratio max. at 120Hz

Working Voltage (V)	160~250	315~450
Z-25˚C / Z+20˚C	3	8
Z-40˚C / Z+20˚C	15	–

High Temperature Loading		
Test time : 7,000 hours Test temperature : +105˚C Test conditions : Rated DC working voltage with rated ripple current	Post test requirements at +20˚C Leakage current : ≤Initial specified value Cap. change : within ±20% of the initial measured value tan δ : ≤250% of the initial specified value	

Shelf Life	
At +105˚C no voltage applied after 1,000 hours and then being stabilized at +20˚C the capacitors shall meet the following limits Leakage current : ≤Initial specified value Cap. change : within ±15% of the initial measured value tan δ : ≤150% of the initial specified value	
Industrial Standard	JIS C - 5101-4 (IEC 60384-4)

RIPPLE CURRENT MULTIPLIER

Frequency Coefficient

Coefficient / Freq. (Hz) / Rated Voltage	60	120	1k	10k~50k
160~250V	0.80	1.00	1.25	1.47
315~450V	0.80	1.00	1.30	1.47

PART NUMBER SYSTEM (EXAMPLE : 400V 100μF)

1	2 3	4 5 6	7	8 9	10	11 12	13 14
E	SP	107	M	2G	O	30	SW

- Type (Terminal Code)
- Case Length (30mm)
- Diameter (25mm)
- Voltage (400V)
- Tolerance (±20%)
- Capacitance (100μF)
- Series
- E-CAP

STANDARD RATINGS

Voltage (Code)		160V (2C)		200V (2D)		250V (2E)		315V (2F)	
Cap. (μF)	Code	Case Size	Ripple Current	Case Size	Ripple Current	Case Size	Ripple Current	Case Size	Ripple Current
82	826							22 x 25	0.64
100	107							22 x 30	0.69
120	127							22 x 30	0.75
								25 x 25	0.75
150	157							22 x 35	0.82
								25 x 30	0.82
								30 x 25	0.82
180	187					22 x 30	0.90	22 x 40	0.90
								25 x 35	0.90
						25 x 25	0.90	30 x 25	0.90
220	227			22 x 25	1.00	22 x 30	1.00	22 x 45	1.00
								25 x 40	1.00
						25 x 25	1.00	30 x 30	1.00
270	277	22 x 25	1.10	22 x 30	1.10	22 x 35	1.10	25 x 45	1.10
				25 x 25	1.10	25 x 30	1.10	30 x 35	1.10
						30 x 25	1.10	35 x 30	1.10
330	337	22 x 30	1.20	22 x 30	1.20	22 x 40	1.20	25 x 50	1.20
				25 x 25	1.20	25 x 35	1.20	30 x 40	1.20
						30 x 25	1.20	35 x 30	1.20
390	397	22 x 30	1.30	22 x 35	1.30	22 x 45	1.30	30 x 45	1.30
		25 x 25	1.30	25 x 30	1.30	25 x 35	1.30	35 x 35	1.30
				30 x 25	1.30	30 x 30	1.30		
470	477	22 x 35	1.40	22 x 40	1.40	25 x 45	1.40	30 x 50	1.40
		25 x 30	1.40	25 x 35	1.40	30 x 35	1.40	35 x 40	1.40
				30 x 30	1.40	35 x 30	1.40		
560	567	22 x 40	1.50	22 x 45	1.50	25 x 50	1.50	35 x 45	1.50
		25 x 30	1.50	25 x 35	1.50	30 x 35	1.50		
		30 x 25	1.50	30 x 30	1.50	35 x 30	1.50		
680	687	22 x 45	1.70	25 x 40	1.70	30 x 45	1.70	35 x 50	1.70
		25 x 35	1.70	30 x 35	1.70	35 x 35	1.70		
		30 x 30	1.70						
820	827	25 x 40	2.00	25 x 50	2.00	30 x 50	2.00		
		30 x 30	2.00	30 x 40	2.00	35 x 40	2.00		
				35 x 30	2.00				
1000	108	25 x 45	2.20	30 x 45	2.20	35 x 45	2.20		
		30 x 35	2.20	35 x 35	2.20				
1200	128	25 x 50	2.30	30 x 50	2.30	35 x 50	2.30		
		30 x 40	2.30	35 x 40	2.30				
		35 x 35	2.30						
1500	158	30 x 45	2.50	35 x 50	2.50				
		35 x 35	2.50						
1800	188	30 x 50	2.70						
		35 x 40	2.70						
2200	228	35 x 50	2.90						

Maximum Allowable Ripple Current (Arms) at 105°C 120Hz

Case Size ΦD x L (mm)

Specifications are subject to change without notice. Should a safety or technical concern arise regarding the product, please be sure to contact our sales offices or agents immediately.

STANDARD RATINGS

Voltage (Code)		350V (2V)		400V (2G)		450V (2W)	
Cap. (μF)	Code	Case Size	Ripple Current	Case Size	Ripple Current	Case Size	Ripple Current
39	396					22 x 25	0.37
47	476					22 x 30	0.40
56	566					22 x 35	0.47
						25 x 25	0.47
68	686					22 x 40	0.53
						25 x 30	0.53
82	826	22 x 25	0.64	22 x 35	0.64	22 x 45	0.56
						25 x 35	0.56
				25 x 25	0.64	30 x 25	0.56
100	107	22 x 30	0.69	22 x 35	0.69	22 x 50	0.64
						25 x 40	0.64
		25 x 25	0.69	25 x 30	0.69	30 x 30	0.64
120	127	22 x 35	0.75	22 x 40	0.75	25 x 45	0.72
				25 x 35	0.75		
		25 x 30	0.75	30 x 25	0.75	30 x 30	0.72
150	157	22 x 40	0.82	22 x 50	0.82	25 x 50	0.79
		25 x 30	0.82	25 x 40	0.82	30 x 40	0.79
		30 x 25	0.82	30 x 30	0.82	35 x 30	0.79
180	187	22 x 45	0.90	25 x 45	0.90	30 x 45	0.87
		25 x 35	0.90	30 x 35	0.90		
		30 x 30	0.90	35 x 25	0.90	35 x 35	0.87
220	227	22 x 50	1.00	25 x 50	1.00	30 x 50	1.00
		25 x 40	1.00	30 x 40	1.00		
		30 x 30	1.00	35 x 30	1.00	35 x 40	1.00
270	277	25 x 50	1.10	30 x 45	1.10	35 x 45	1.19
		30 x 35	1.10				
		35 x 30	1.10	35 x 35	1.10		
330	337	30 x 45	1.20	30 x 50	1.20	35 x 50	1.38
		35 x 35	1.20	35 x 40	1.20		
390	397	30 x 50	1.30	35 x 45	1.30		
		35 x 40	1.30				
470	477	35 x 40	1.40	35 x 50	1.40		
560	567	35 x 50	1.50				

Maximum Allowable Ripple Current (Arms) at 105˚C 120Hz

Case Size ΦD x L (mm)

Specifications are subject to change without notice. Should a safety or technical concern arise regarding the product, please be sure to contact our sales offices or agents immediately.

SAMXON®
Aluminum Electrolytic Capacitors

Lug / Snap-in Terminal Type (插入/自立型), Withstanding Vibration (耐振動)

FEATURES

- Designed for withstanding vibration.
- Suited for washing machines and etc.

SPECIFICATIONS

Item	Performance Characteristics
Operating Temperature Range	-40 to +105˚C / -25 to +105˚C
Rated Working Voltage Range	10 to 100V / 160 to 500V
Nominal Capacitance Range	39 to 56000μF
Capacitance Tolerance	±20% at 120Hz, +20˚C
Leakage Current	I ≤3 $\sqrt{CV}$ (μA) after 5 minutes application of rated working voltage at +20˚C
tan δ (120Hz, +20˚C)	Working Voltage (V): 10, 16, 25, 35, 50, 63, 80 tan δ (max.): 0.55, 0.50, 0.45, 0.35, 0.30, 0.30, 0.25 Working Voltage (V): 100, 160~250, 315~450, 500 tan δ (max.): 0.20, 0.15, 0.15, 0.20 For capacitance value >33000μF, add following calculated value: $\frac{\text{(rated capacitance) - 33000μF}}{\text{10000μF}}$ x 0.1
Low Temperature Characteristics	Impedance ratio max. at 120Hz Working Voltage (V): 10~25, 35, 50, 63~100, 160~250, 315~450, 500 Z-25˚C / Z+20˚C: 4, 6, 4, 3, 8, 8, 8 Z-40˚C / Z+20˚C: 15, 15, 15, 15, –, –, –
High Temperature Loading	Test time : 2,000 hours Test temperature : +105˚C Test conditions : Rated DC working voltage with rated ripple current Post test requirements at +20˚C Leakage current : ≤Initial specified value Cap. change : within ±20% of the initial measured value tan δ : ≤200% of the initial specified value
Shelf Life	At +105˚C no voltage applied after 1,000 hours and then being stabilized at +20˚C the capacitors shall meet the following limits Leakage current : ≤Initial specified value Cap. change : within ±15% of the initial measured value tan δ : ≤150% of the initial specified value
Industrial Standard	JIS C - 5101-4 (IEC 60384-4)

RIPPLE CURRENT MULTIPLIER

Frequency Coefficient

Coefficient / Freq. (Hz) / Rated Voltage	60	120	1k	10k~50k
10~100V	0.90	1.00	1.15	1.25
160~250V	0.80	1.00	1.25	1.47
315~500V	0.80	1.00	1.30	1.47

PART NUMBER SYSTEM (EXAMPLE : 200V 470μF)

1	2 3	4 5 6	7	8 9	10	11 12	13 14
E	VP	477	M	2 D	O	3 0	S W

- Type (Terminal Code)
- Case Length (30mm)
- Diameter (25mm)
- Voltage (200V)
- Tolerance (±20%)
- Capacitance (470μF)
- Series
- E-CAP

STANDARD RATINGS

Voltage (Code)		10V (1A)		16V (1C)		25V (1E)		35V (1V)	
Cap. (μF)	Code	Case Size	Ripple Current	Case Size	Ripple Current	Case Size	Ripple Current	Case Size	Ripple Current
2700	278							20 x 25	1.29
3300	338							20 x 30	1.57
								22 x 25	1.45
3900	398					20 x 25	1.58	20 x 35	1.78
								22 x 30	1.69
4700	478					20 x 30	1.65	20 x 40	2.02
						22 x 25	1.61	22 x 35	2.02
								25 x 25	1.62
5600	568			20 x 25	1.68	20 x 35	1.85	22 x 35	2.13
						22 x 30	1.80	25 x 30	2.00
6800	688	20 x 25	1.31	20 x 30	1.80	20 x 40	2.11	22 x 40	2.41
				22 x 25	1.75	22 x 35	2.09	25 x 35	2.31
						25 x 25	1.87	30 x 25	2.31
8200	828	20 x 30	1.59	20 x 35	2.08	22 x 40	2.31	22 x 50	2.85
				22 x 30	2.00	25 x 30	2.34	25 x 40	2.73
						30 x 25	2.16	30 x 30	2.75
10000	109	20 x 30	1.88	20 x 40	2.15	22 x 45	2.65	25 x 45	3.05
		22 x 25	1.77	22 x 30	2.10	25 x 35	2.61	30 x 35	3.05
				25 x 25	2.05	30 x 30	2.61		
12000	129	20 x 35	2.18	22 x 35	2.31	22 x 50	2.80	25 x 50	3.37
		22 x 30	2.10	25 x 30	2.30	25 x 40	2.81	30 x 40	3.23
		25 x 25	1.94	30 x 25	2.30	30 x 30	2.74	35 x 30	3.19
15000	159	20 x 40	2.27	22 x 40	2.68	25 x 45	3.27	30 x 45	3.72
		22 x 35	2.23	25 x 35	2.58	30 x 35	3.13	35 x 35	3.67
		25 x 30	2.10	30 x 30	2.57	35 x 30	3.26		
18000	189	22 x 40	2.41	22 x 50	3.20	30 x 40	3.56	35 x 40	4.37
		25 x 30	2.34	25 x 40	3.16	35 x 35	3.84		
		30 x 25	2.25	30 x 30	2.98				
22000	229	22 x 45	2.58	25 x 45	3.36	30 x 45	4.04	35 x 45	4.92
		25 x 35	2.54	30 x 35	3.30	35 x 35	3.75		
		30 x 30	2.50	35 x 30	3.25				
27000	279	22 x 50	3.17	25 x 50	3.85	35 x 45	4.74		
		25 x 40	3.07	30 x 40	3.80				
		30 x 30	2.95	35 x 35	3.93				
33000	339	25 x 45	3.39	30 x 45	4.30	35 x 50	5.50		
		30 x 35	3.33	35 x 35	4.27				
		35 x 30	3.21						
39000	399	30 x 40	3.70	30 x 50	4.81				
		35 x 35	3.68	35 x 40	4.80				
47000	479	30 x 45	4.22	35 x 45	5.53				
		35 x 40	4.16						
56000	569	35 x 50	5.00						

Maximum Allowable Ripple Current (Arms) at 105°C 120Hz

Case Size ΦD x L (mm)

Specifications are subject to change without notice. Should a safety or technical concern arise regarding the product, please be sure to contact our sales offices or agents immediately.

SAMXON®
Aluminum Electrolytic Capacitors

Lug / Snap-in Terminal Type (插入/自立型), Withstanding Vibration (耐振動)

STANDARD RATINGS

Voltage (Code)		50V (1H)		63V (1J)		80V (1K)		100V (2A)	
Cap. (μF)	Code	Case Size	Ripple Current	Case Size	Ripple Current	Case Size	Ripple Current	Case Size	Ripple Current
560	567							20 x 25	0.95
680	687							20 x 30	1.15
								22 x 25	1.09
820	827					20 x 25	1.04	20 x 35	1.31
								22 x 30	1.32
1000	108			20 x 25	1.10	20 x 30	1.24	20 x 35	1.43
								22 x 30	1.47
						22 x 25	1.19	25 x 25	1.45
1200	128			20 x 30	1.20	20 x 35	1.43	20 x 40	1.61
								22 x 35	1.69
				22 x 25	1.20	22 x 30	1.44	25 x 30	1.68
1500	158	20 x 25	1.15	20 x 35	1.47	20 x 35	1.57	22 x 40	1.97
						22 x 30	1.59	25 x 35	1.98
				22 x 30	1.47	25 x 25	1.59	30 x 25	1.95
1800	188	20 x 30	1.39	20 x 35	1.58	20 x 40	1.77	22 x 45	2.23
				22 x 30	1.58	22 x 35	1.79	25 x 40	2.20
		22 x 25	1.34	25 x 25	1.52	25 x 30	1.71	30 x 30	2.20
2200	228	20 x 35	1.60	20 x 40	1.80	22 x 40	2.03	25 x 45	2.53
				22 x 35	1.82	25 x 35	1.98	30 x 35	2.55
		22 x 30	1.60	25 x 30	1.75	30 x 25	1.98	35 x 30	2.50
2700	278	20 x 35	1.73	22 x 40	2.07	22 x 45	2.39	25 x 50	2.82
		22 x 30	1.70	25 x 35	2.11	25 x 40	2.35	30 x 40	2.86
		25 x 25	1.70	30 x 25	1.72	30 x 30	2.35	35 x 35	2.89
3300	338	20 x 40	1.97	22 x 45	2.33	25 x 45	2.64	30 x 45	3.30
		22 x 35	1.97	25 x 35	2.27	30 x 35	2.61		
		25 x 30	1.88	30 x 30	2.24	35 x 30	2.47	35 x 35	3.25
3900	398	22 x 40	2.22	25 x 40	2.51	25 x 50	2.92	30 x 50	3.60
		25 x 30	2.20			30 x 40	2.82		
		30 x 25	1.95	30 x 35	2.55	35 x 30	2.97	35 x 40	3.67
4700	478	22 x 45	2.43	25 x 50	2.91	30 x 45	3.34	35 x 45	3.80
		25 x 35	2.43	30 x 40	2.86				
		30 x 30	2.25	35 x 30	2.80	35 x 35	3.38		
5600	568	22 x 50	2.75	30 x 40	3.22	30 x 50	3.80	35 x 50	4.05
		25 x 40	2.72						
		30 x 30	2.64	35 x 35	3.20	35 x 40	3.80		
6800	688	25 x 45	3.30	30 x 50	3.65	35 x 45	3.90		
		30 x 35	3.30						
		35 x 30	3.25	35 x 40	3.65				
8200	828	30 x 40	3.60	35 x 45	4.04	35 x 50	4.20		
		35 x 35	3.60						
10000	109	30 x 50	4.05	35 x 50	4.48				
		35 x 40	4.04						
12000	129	35 x 45	4.56						
15000	159	35 x 50	4.77						

Maximum Allowable Ripple Current (Arms) at 105˚C 120Hz

Case Size ΦD x L (mm)

Specifications are subject to change without notice. Should a safety or technical concern arise regarding the product, please be sure to contact our sales offices or agents immediately.

STANDARD RATINGS

Voltage (Code)		160V (2C)		180V (2P)		220V (2D)		220V (2N)	
Cap. (μF)	Code	Case Size	Ripple Current	Case Size	Ripple Current	Case Size	Ripple Current	Case Size	Ripple Current
180	187							20 x 25	0.81
220	227			20 x 25	0.81	20 x 25	0.83	20 x 30	0.94
								22 x 25	0.94
270	277	20 x 25	0.87	20 x 30	0.95	20 x 30	0.97	20 x 35	1.10
				22 x 25	0.97	22 x 25	0.99	22 x 30	1.09
330	337	20 x 30	1.02	20 x 35	1.09	20 x 35	1.17	20 x 40	1.18
		22 x 25	1.03	22 x 30	1.13	22 x 30	1.20	22 x 35	1.24
						25 x 25	1.20	25 x 25	1.14
390	397	20 x 35	1.15	20 x 35	1.28	20 x 40	1.27	20 x 45	1.33
		22 x 30	1.17	22 x 30	1.32	22 x 35	1.30	22 x 35	1.30
				25 x 25	1.33	25 x 25	1.34	25 x 30	1.26
470	477	20 x 40	1.25	20 x 40	1.34	22 x 40	1.44	22 x 40	1.41
		22 x 30	1.28	22 x 35	1.39	25 x 30	1.44	25 x 30	1.39
		25 x 25	1.29	25 x 30	1.43	30 x 25	1.48	30 x 25	1.37
560	567	22 x 35	1.45	22 x 40	1.56	22 x 45	1.60	22 x 45	1.60
								25 x 35	1.56
		25 x 30	1.49	25 x 30	1.53	25 x 35	1.60	30 x 30	1.61
				30 x 25	1.56	30 x 30	1.60	35 x 25	1.52
680	687	22 x 40	1.64	22 x 45	1.76	22 x 50	1.75	25 x 40	1.75
		25 x 35	1.70	25 x 35	1.76	25 x 40	1.76	30 x 35	1.76
		30 x 25	1.63	30 x 30	1.74	30 x 30	1.74	35 x 30	1.72
820	827	22 x 45	1.85	22 x 50	1.97	25 x 45	2.10	25 x 45	1.97
		25 x 40	1.92	25 x 40	1.99	30 x 35	2.11	30 x 40	2.06
		30 x 30	1.91	30 x 30	1.93	35 x 30	2.10	35 x 30	1.95
1000	108	25 x 45	2.17	25 x 45	2.24	25 x 50	2.36	30 x 45	2.44
				30 x 35	2.24	30 x 40	2.40		
		30 x 35	2.19	35 x 30	2.20	35 x 35	2.30	35 x 35	2.20
1200	128	25 x 50	2.43	30 x 40	2.53	30 x 45	2.69	35 x 40	2.37
		30 x 40	2.48	35 x 35	2.54	35 x 35	2.53		
		35 x 30	2.25						
1500	158	30 x 45	2.82	30 x 50	3.03	35 x 40	2.97	35 x 45	2.64
		35 x 35	2.62	35 x 40	2.91				
1800	188	30 x 50	3.13	35 x 45	3.25	35 x 50	3.45		
		35 x 40	2.97						
2200	228	35 x 45	3.34	35 x 50	3.62				

Maximum Allowable Ripple Current (Arms) at 105˚C 120Hz

Case Size ΦD x L (mm)

Specifications are subject to change without notice. Should a safety or technical concern arise regarding the product, please be sure to contact our sales offices or agents immediately.

STANDARD RATINGS

Voltage (Code)		250V (2E)		315V (2F)		350V (2V)		385V (2Y)	
Cap. (μF)	Code	Case Size	Ripple Current	Case Size	Ripple Current	Case Size	Ripple Current	Case Size	Ripple Current
56	566							20 x 25	0.37
68	686					20 x 25	0.41	20 x 30	0.44
								22 x 25	0.45
82	826			20 x 25	0.39	20 x 30	0.45	20 x 30	0.50
								22 x 30	0.52
100	107			20 x 30	0.45	20 x 30	0.51	20 x 35	0.56
								22 x 30	0.58
						22 x 25	0.53	25 x 25	0.57
120	127			20 x 30	0.54	20 x 35	0.59	20 x 40	0.68
						22 x 30	0.61	22 x 35	0.68
				22 x 25	0.56	25 x 25	0.62	25 x 30	0.68
150	157	20 x 25	0.71	20 x 35	0.64	20 x 40	0.70	22 x 40	0.79
				22 x 30	0.66	22 x 35	0.73	25 x 30	0.78
				25 x 25	0.65	25 x 30	0.73	30 x 25	0.75
180	187	20 x 30	0.82	20 x 40	0.75	22 x 40	0.83	22 x 45	0.89
				22 x 35	0.78	25 x 30	0.80	25 x 35	0.86
		22 x 25	0.84	25 x 30	0.71	30 x 25	0.81	30 x 30	0.88
220	227	20 x 35	0.95	22 x 40	0.89	22 x 45	0.94	22 x 50	1.01
		22 x 30	0.97	25 x 30	0.85	25 x 35	0.92	25 x 40	1.00
		25 x 25	0.99	30 x 25	0.83	30 x 30	0.98	30 x 30	1.00
270	277	20 x 40	1.08	22 x 45	1.01	22 x 50	1.07	25 x 45	1.13
		22 x 35	1.11	25 x 35	0.98	25 x 40	1.05	30 x 40	1.14
		25 x 30	1.15	30 x 30	1.01	30 x 30	1.03	35 x 30	1.10
330	337	22 x 40	1.26	22 x 50	1.14	25 x 45	1.24	30 x 45	1.31
		25 x 30	1.26	25 x 40	1.12	30 x 35	1.24		
		30 x 25	1.31	30 x 35	1.21	35 x 30	1.18	35 x 35	1.32
390	397	22 x 45	1.41	25 x 45	1.31	25 x 50	1.38	30 x 50	1.48
		25 x 35	1.42	30 x 35	1.30	30 x 40	1.39		
		30 x 30	1.50	35 x 30	1.23	35 x 35	1.39	35 x 40	1.48
470	477	22 x 50	1.58	30 x 40	1.53	30 x 45	1.57	35 x 45	1.76
		25 x 40	1.61						
		30 x 30	1.61	35 x 35	1.47	35 x 35	1.50		
560	567	25 x 45	1.80	30 x 45	1.65	30 x 50	1.75	35 x 50	1.95
		30 x 35	1.84	35 x 40	1.66	35 x 40	1.69		
680	687	25 x 50	2.03	35 x 45	1.96	35 x 45	1.96		
		30 x 40	2.09						
		35 x 30	1.96						
820	827	30 x 45	2.35	35 x 50	2.19				
		35 x 35	2.26						
1000	108	30 x 50	2.64						
		35 x 40	2.57						
1200	128	35 x 45	2.88						

Maximum Allowable Ripple Current (Arms) at 105°C 120Hz

Case Size ΦD x L (mm)

Specifications are subject to change without notice. Should a safety or technical concern arise regarding the product, please be sure to contact our sales offices or agents immediately.

STANDARD RATINGS

Voltage (Code)		400V (2G)		420V (2M)		450V (2W)		500V (2H)	
Cap. (μF)	Code	Case Size	Ripple Current	Case Size	Ripple Current	Case Size	Ripple Current	Case Size	Ripple Current
39	396							22 x 30	0.35
47	476					20 x 25	0.36	22 x 35	0.41
56	566	20 x 25	0.40	20 x 25	0.40	20 x 30	0.41	22 x 40	0.47
						22 x 25	0.42		
68	686	20 x 30	0.48	20 x 30	0.48	20 x 35	0.47	22 x 45	0.54
						22 x 30	0.50		
		22 x 25	0.49	22 x 25	0.50	25 x 25	0.50		
82	826	20 x 30	0.54	20 x 35	0.53	20 x 40	0.53	25 x 40	0.62
				22 x 30	0.56	22 x 35	0.56		
		22 x 30	0.56	25 x 25	0.56	25 x 30	0.57		
100	107	20 x 35	0.60	20 x 35	0.58	22 x 40	0.64	25 x 45	0.67
		22 x 30	0.62	22 x 30	0.63	25 x 30	0.63		
		25 x 25	0.61	25 x 25	0.63	30 x 25	0.67		
120	127	20 x 40	0.71	20 x 45	0.71	22 x 45	0.72	25 x 50	0.77
				22 x 35	0.73				
		22 x 35	0.73	25 x 30	0.72	25 x 35	0.71	35 x 30	0.72
		25 x 30	0.73	30 x 25	0.75	30 x 30	0.77		
150	157	22 x 40	0.85	22 x 45	0.86	22 x 50	0.80	30 x 40	0.82
		25 x 35	0.85	25 x 35	0.83	25 x 40	0.82		
		30 x 25	0.79	30 x 25	0.83	30 x 30	0.85		
180	187	22 x 45	0.95	22 x 50	1.02	25 x 45	0.93	30 x 50	1.01
				25 x 40	0.94				
		25 x 35	0.92	30 x 30	0.95	30 x 35	0.97		
		30 x 30	0.95	35 x 25	0.90				
220	227	22 x 50	1.08	25 x 45	1.13	25 x 50	1.05	35 x 45	1.12
		25 x 40	1.05	30 x 35	1.09	30 x 40	1.10		
		30 x 35	1.24	35 x 30	1.05	35 x 30	1.01		
270	277	25 x 50	1.29	25 x 50	1.37	30 x 45	1.25	35 x 50	1.29
		30 x 40	1.30	30 x 40	1.25	35 x 35	1.26		
		35 x 30	1.18	35 x 35	1.25				
330	337	30 x 45	1.47	30 x 45	1.49	30 x 50	1.42		
		35 x 35	1.41	35 x 35	1.42	35 x 40	1.44		
390	397	30 x 50	1.64	30 x 50	1.67	35 x 45	1.61		
		35 x 40	1.59	35 x 40	1.61				
470	477	35 x 45	1.87	35 x 45	1.86	35 x 50	1.80		
560	567	35 x 50	2.09						

Maximum Allowable Ripple Current (Arms) at 105˚C 120Hz

Case Size ΦD x L (mm)

Specifications are subject to change without notice. Should a safety or technical concern arise regarding the product, please be sure to contact our sales offices or agents immediately.

SAMXON®
Aluminum Electrolytic Capacitors

Lug / Snap-in Terminal Type (插入/自立型), Ultra Small Size (超小體積)

FEATURES

- One rank smaller case sized than HP series.
- Suited for equipment down sizing.

SPECIFICATIONS

Item	Performance Characteristics	
Operating Temperature Range	-40 to +105˚C	-25 to +105˚C
Rated Working Voltage Range	160 to 250V	400 to 450V
Nominal Capacitance Range	100 to 3300μF	
Capacitance Tolerance	±20% at 120Hz, +20˚C	
Leakage Current	I ≤3 $\sqrt{CV}$ (μA) after 5 minutes application of rated working voltage at +20˚C	

tan δ (120Hz, +20˚C)

Working Voltage (V)	160	180	200	220	250	400	420	450
tan δ (max.)	0.15	0.15	0.15	0.15	0.15	0.15	0.15	0.20

Low Temperature Characteristics

Impedance ratio max. at 120Hz

Working Voltage (V)	160~250	400~450
Z-25˚C / Z+20˚C	4	8
Z-40˚C / Z+20˚C	15	–

High Temperature Loading		
Test time : 2,000 hours	Post test requirements at +20˚C	
Test temperature : +105˚C	Leakage current	: ≤Initial specified value
Test conditions : Rated DC working voltage with rated ripple current	Cap. change	: within ±20% of the initial measured value
	tan δ	: ≤200% of the initial specified value

Shelf Life

At +105˚C no voltage applied after 1,000 hours and then being stabilized at +20˚C the capacitors shall meet the following limits

Leakage current : ≤Initial specified value
Cap. change : within ±15% of the initial measured value
tan δ : ≤150% of the initial specified value

Industrial Standard	JIS C - 5101-4 (IEC 60384-4)

RIPPLE CURRENT MULTIPLIER

Frequency Coefficient

Coefficient / Freq. (Hz) / Rated Voltage	60	120	1k	10k~50k
160~250V	0.85	1.00	1.32	1.45
400~450V	0.82	1.00	1.30	1.41

PART NUMBER SYSTEM (EXAMPLE : 250V 560μF)

1	2 3	4 5 6	7	8 9	10	11 12	13 14
E	GP	567	M	2 E	O	3 5	S W

- Type (Terminal Code)
- Case Length (35mm)
- Diameter (25mm)
- Voltage (250V)
- Tolerance (±20%)
- Capacitance (560μF)
- Series
- E-CAP

STANDARD RATINGS

Voltage (Code)		160V (2C)		180V (2P)		200V (2D)		220V (2N)	
Cap. (μF)	Code	Case Size	Ripple Current	Case Size	Ripple Current	Case Size	Ripple Current	Case Size	Ripple Current
330	337							22 x 25	1.26
390	397							22 x 30	1.34
470	477			22 x 25	1.30	22 x 25	1.20	22 x 35	1.48
								25 x 25	1.40
560	567	22 x 25	1.40	22 x 30	1.50	22 x 30	1.48	22 x 35	1.45
						25 x 25	1.48	25 x 30	1.45
680	687	22 x 30	1.50	22 x 35	1.70	22 x 35	1.60	22 x 40	1.65
		25 x 25	1.70	25 x 30	1.70	25 x 30	1.60	25 x 35	1.78
								30 x 25	1.65
820	827	22 x 35	2.00	22 x 40	2.00	22 x 40	1.75	22 x 50	1.93
								25 x 40	1.93
		25 x 30	2.00	25 x 35	2.00	25 x 35	1.75	30 x 30	1.85
				30 x 25	2.00	30 x 25	1.75	35 x 25	1.93
1000	108	22 x 40	2.10	22 x 45	2.10	22 x 45	2.04	25 x 45	2.15
		25 x 35	2.20	25 x 35	2.05	25 x 40	2.04	30 x 35	2.33
		30 x 25	2.20	30 x 30	2.20	30 x 30	2.04	35 x 30	2.33
1200	128	25 x 40	2.30	22 x 50	2.15	25 x 45	2.30	30 x 40	2.50
		30 x 30	2.30	25 x 40	2.15	30 x 35	2.30	35 x 30	2.35
				30 x 35	2.30				
		35 x 25	2.30	35 x 25	2.15	35 x 25	2.30		
1500	158	25 x 45	2.50	25 x 50	2.40	25 x 50	2.57	30 x 45	2.55
		30 x 35	2.50	30 x 40	2.50	30 x 40	2.57	35 x 35	2.50
		35 x 30	2.50	35 x 30	2.35	35 x 30	2.57		
1800	188	30 x 40	2.70	30 x 45	2.70	30 x 45	2.68	35 x 40	2.70
		35 x 30	2.55	35 x 35	2.70	35 x 35	2.68		
2200	228	30 x 45	2.90	30 x 50	2.90	30 x 50	2.92	35 x 50	2.95
		35 x 35	2.90	35 x 40	2.90	35 x 40	2.92		
2700	278	35 x 40	3.00	35 x 45	3.00	35 x 45	3.27		
3300	338	35 x 45	3.10	35 x 50	3.10				

Maximum Allowable Ripple Current (Arms) at 105°C 120Hz

Case Size ΦD x L (mm)

Specifications are subject to change without notice. Should a safety or technical concern arise regarding the product, please be sure to contact our sales offices or agents immediately.

STANDARD RATINGS

Voltage (Code)		250V (2E)		400V (2G)		420V (2M)		450V (2W)	
Cap. (μF)	Code	Case Size	Ripple Current	Case Size	Ripple Current	Case Size	Ripple Current	Case Size	Ripple Current
100	107							22 x 25	0.64
120	127			22 x 25	0.68	22 x 30	0.81	22 x 30	0.69
								25 x 25	0.69
150	157					22 x 35	0.84	22 x 35	0.72
						25 x 25	0.82	25 x 30	0.79
180	187			22 x 30	0.73	22 x 35	0.85	22 x 40	0.79
				25 x 25	0.73	25 x 30	0.91	25 x 30	0.79
220	227			22 x 35	0.85	22 x 40	0.95	22 x 45	0.87
				25 x 30	0.85	25 x 35	1.05	25 x 35	0.87
						30 x 25	0.95	30 x 30	0.79
270	277			22 x 40	1.00	22 x 50	1.15	25 x 50	1.20
				25 x 35	1.00	25 x 40	1.25	30 x 35	1.20
				30 x 25	1.00	30 x 30	1.25	35 x 35	1.20
330	337			22 x 50	1.15	25 x 45	1.35	25 x 50	1.20
				25 x 40	1.15	30 x 35	1.42	30 x 35	1.20
				30 x 30	1.15	35 x 30	1.42	35 x 30	1.20
				35 x 25	1.15				
390	397	22 x 30	1.20	25 x 45	1.40	25 x 50	1.45	30 x 40	1.38
		25 x 25	1.20	30 x 35	1.40	30 x 40	1.61	35 x 35	1.38
				35 x 30	1.55	35 x 30	1.45		
470	477	22 x 35	1.30	25 x 50	1.55	30 x 45	1.86	30 x 45	1.55
		25 x 30	1.30	30 x 40	1.55	35 x 35	1.70	35 x 40	1.55
				35 x 30	1.55				
560	567	22 x 40	1.40	30 x 45	1.63	35 x 40	1.90	35 x 45	1.70
		25 x 35	1.50	35 x 35	1.63				
		30 x 25	1.40						
680	687	22 x 45	1.50	30 x 50	1.80	35 x 45	2.05	35 x 50	1.91
		25 x 40	1.70	35 x 40	1.80				
		30 x 30	1.70						
820	827	25 x 45	2.00	35 x 45	2.00				
		30 x 35	2.00						
		35 x 30	2.00						
1000	108	25 x 50	2.20	35 x 50	2.14				
		30 x 40	2.20						
		35 x 30	2.00						
1200	128	30 x 45	2.30						
		35 x 35	2.20						
1500	158	30 x 50	2.30						
		35 x 40	2.30						
1800	188	35 x 45	2.50						

Maximum Allowable Ripple Current (Arms) at 105°C 120Hz

Case Size ΦD x L (mm)

Specifications are subject to change without notice. Should a safety or technical concern arise regarding the product, please be sure to contact our sales offices or agents immediately.

CASE SIZE TABLE

O-Type

Φ35~90

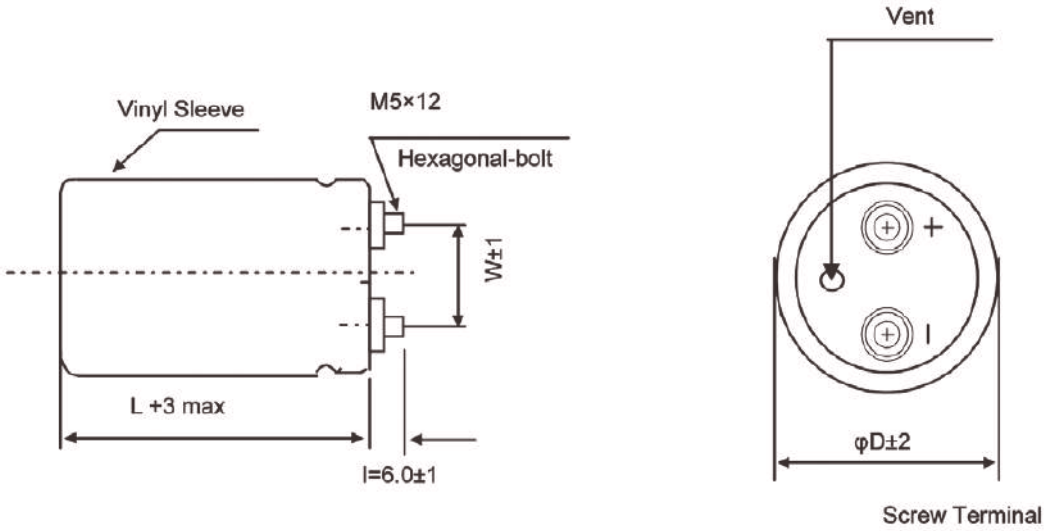

Unit : mm

D-Type

Φ76~90

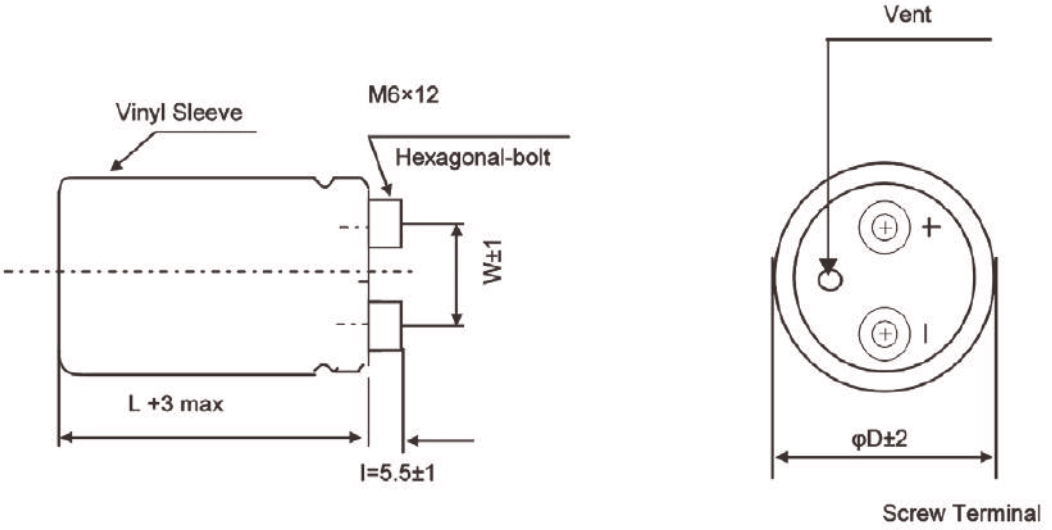

Unit : mm

SAMXON®
Aluminum Electrolytic Capacitors

+85˚C, Screw Terminal Type (螺釘型), Standard (標準品)

FEATURES

- Small case size, high rated voltage, capacitance and ripple current, stable and reliable performance, forming complete sets of unclear electric station.
- Suitable for use in electronic and industrial equipments such as computer, programming control exchanger for power supplies filtering and energy storaging.

SPECIFICATIONS

Item	Performance Characteristics	
Operating Temperature Range	-40 to +85˚C	-25 to +85˚C
Rated Working Voltage Range	10 to 100V	160 to 630V
Nominal Capacitance Range	100 to 680000μF	
Capacitance Tolerance	±20% at 120Hz, +20˚C	
Leakage Current	I ≤0.02CV (μA) or 5 (mA) whichever is smaller measured after 5 minutes application of rated working voltage at +20˚C	
tan δ (120Hz, +20˚C)	The values shown in the STANDARD RATINGS tables	
Low Temperature Characteristics	Impedance ratio max. at 120Hz Working Voltage (V): 10~100 / 160~630 Z-25˚C / Z+20˚C: – / 8 Z-40˚C / Z+20˚C: 15 / –	
High Temperature Loading	Test time : 2,000 hours Test temperature : +85˚C Test conditions : Rated DC working voltage with rated ripple current	Post test requirements at +20˚C Leakage current : ≤Initial specified value Cap. change : within ±20% of the initial measured value tan δ : ≤200% of the initial specified value
Shelf Life	At +85˚C no voltage applied after 1,000 hours and then being stabilized at +20˚C the capacitors shall meet the following limits Leakage current : ≤Initial specified value Cap. change : within ±20% of the initial measured value tan δ : ≤175% of the initial specified value	
Industrial Standard	JIS C - 5101-4 (IEC 60384-4)	

RIPPLE CURRENT MULTIPLIER

Frequency Coefficient

Coefficient / Freq. (Hz) / Rated Voltage	50	120	300	1k	10k~
<160V	0.80	1.00	1.08	1.15	1.15
≥160V	0.80	1.00	1.08	1.15	1.20

PART NUMBER SYSTEM (EXAMPLE : 160V 6800μF)

1	2 3	4 5 6	7	8 9	10	11 12	13 14
E	WR	688	M	2C	S	1L	OO

- 13 14: Type (Terminal Code)
- 11 12: Case Length (100mm)
- 10: Diameter (51mm)
- 8 9: Voltage (160V)
- 7: Tolerance (±20%)
- 4 5 6: Capacitance (6800μF)
- 2 3: Series
- 1: E-CAP

CASE SIZE TABLE

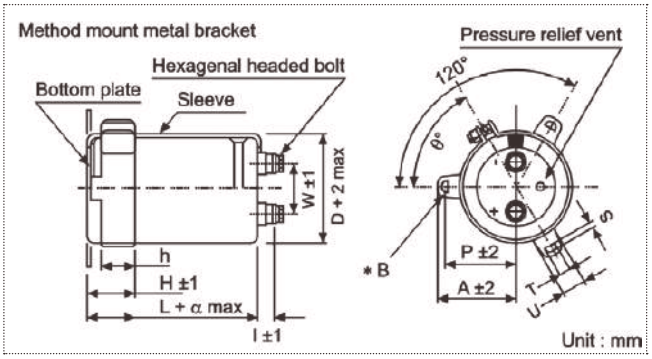

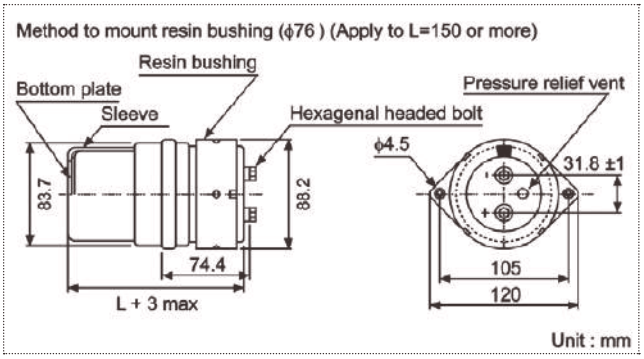

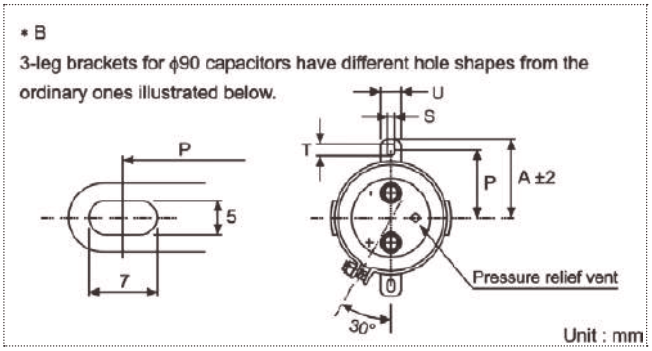

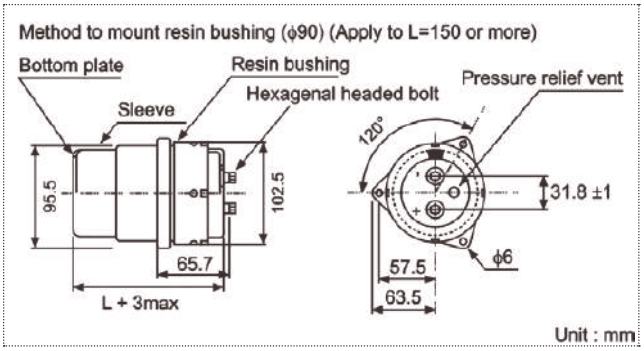

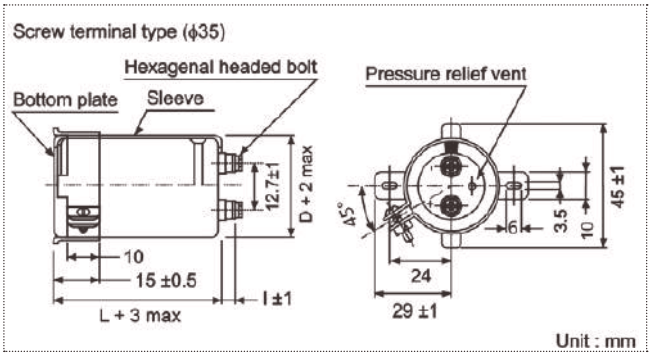

Dimension of terminal pitch (w) and Nominal dia. of bolt

ΦD	w	α	Nominal dia. of bolt
35	12.7	3	M5
51	22.0	3	M5
63.5	28.6	3	M5
76	31.8	3	M5
90	31.8	3	M5

Dimensions of mounting bracket

Voltage (Code)		3 - Leg				2 - Leg				
Symbol	ΦD	51	63.5	76	90	35	51	63.5	76	90
P		32.5	38.1	44.5	50.8	24	33.2	40.5	46.5	53
A		38.5	43	49.2	58.5	29	40	46.5	53	59
T		7.5	8.0	7.0	8.0	6.0	6.0	7.0	6.0	6.0
S		5.0	5.0	5.0	5.0	3.5	4.5	4.5	4.5	4.5
U		12	14	14	18	10	14	14	14	14
θ˚		60	60	60	60	30	30	30	30	30
H		20	25	30	35	15	25	35	35	35
h		15	20	24	25	10	15	20	20	20

SAMXON®
Aluminum Electrolytic Capacitors

+85˚C, Screw Terminal Type (螺釘型), Standard (標準品)

STANDARD RATINGS

Voltage (Code)		10V (1A)			16V (1C)			25V (1E)		
SV		13			20			32		
Cap. (μF)	Code	Case Size	tan δ	Ripple Current	Case Size	tan δ	Ripple Current	Case Size	tan δ	Ripple Current
18000	189							35 x 50	0.35	4.0
27000	279				35 x 50	0.45	4.2			
39000	399	35 x 50	0.60	4.7				35 x 80	0.40	6.2
47000	479							35 x 100	0.40	7.4
56000	569				35 x 80	0.60	6.5	35 x 120	0.45	8.3
82000	829	35 x 80	0.60	7.0	35 x 100	0.70	8.0	51 x 80	0.50	9.7
100000	10T	35 x 100	0.70	8.0	35 x 120	0.70	9.6	51 x 100	0.60	10.8
120000	12T	35 x 120	0.70	9.4	51 x 80	0.80	9.6	51 x 120	0.60	12.0
150000	15T	51 x 80	0.90	9.8	51 x 100	0.90	11.2			
180000	18T							63.5 x 100	0.75	14.7
220000	22T	51 x 100	1.00	10.3	51 x 120	1.00	14.2	63.5 x 100	0.80	15.0
270000	27T	51 x 120	1.20	12.8	63.5 x 100	1.20	15.3	76 x 100	0.90	18.3
330000	33T				63.5 x 120	1.30	17.1	76 x 120	1.00	20.7
390000	39T	63.5 x 100	1.50	15.3	76 x 100	1.60	18.0	76 x 140	1.20	22.1
470000	47T	63.5 x 120	2.00	16.0	76 x 100	1.80	19.3			
560000	56T	76 x 120	2.50	17.3	76 x 140	2.00	20.7	90 x 140	1.50	25.8
680000	68T	76 x 120	3.00	18.7						

Maximum Allowable Ripple Current (Arms) at 85˚C 120Hz
tan δ at 20˚C 120Hz

Case Size ΦD x L (mm)

Voltage (Code)		35V (1V)			50V (1H)			63V (1J)		
SV		44			63			79		
Cap. (μF)	Code	Case Size	tan δ	Ripple Current	Case Size	tan δ	Ripple Current	Case Size	tan δ	Ripple Current
5600	568							35 x 50	0.20	3.0
10000	109				35 x 50	0.25	3.9	35 x 80	0.25	4.0
15000	159	35 x 50	0.30	3.9				35 x 100	0.25	5.3
18000	189				35 x 80	0.25	5.2	35 x 120	0.25	6.2
22000	229				35 x 100	0.30	5.7	51 x 80	0.30	6.5
27000	279				35 x 120	0.35	6.6			
33000	339	35 x 80	0.40	6.0				51 x 100	0.35	8.1
39000	399	35 x 100	0.40	6.7	51 x 80	0.40	7.4	51 x 120	0.35	9.5
47000	479	35 x 120	0.45	8.0				63.5 x 100	0.40	10.2
56000	569				51 x 100	0.40	9.8			
68000	689	51 x 80	0.50	8.5	51 x 120	0.45	11.1	63.5 x 120	0.45	12.7
82000	829	51 x 100	0.55	10.3	63.5 x 100	0.50	12.2			
100000	10T	51 x 120	0.60	11.3				76 x 120	0.45	16.7
120000	12T	51 x 120	0.60	12.8	63.5 x 120	0.50	15.0	76 x 140	0.50	19.0
150000	15T	63.5 x 100	0.70	13.2	76 x 115	0.60	17.7	90 x 140	0.55	22.0
					76 x 120	0.60	18.1			
180000	18T	63.5 x 120	0.70	15.3	76 x 140	0.70	19.5			
220000	22T	76 x 100	0.75	17.8						
270000	27T	76 x 120	0.80	18.4	90 x 140	0.80	23.2			
330000	33T	76 x 140	0.90	22.0						
470000	47T	90 x 140	1.00	28.0						

Maximum Allowable Ripple Current (Arms) at 85˚C 120Hz
tan δ at 20˚C 120Hz

Case Size ΦD x L (mm)

Specifications are subject to change without notice. Should a safety or technical concern arise regarding the product, please be sure to contact our sales offices or agents immediately.

STANDARD RATINGS

Voltage (Code)		80V (1K)			100V (2A)			160V (2C)		
SV		100			125			200		
Cap. (μF)	Code	Case Size	tan δ	Ripple Current	Case Size	tan δ	Ripple Current	Case Size	tan δ	Ripple Current
1200	128							35 x 50	0.15	2.0
2200	228				35 x 50	0.10	2.1	35 x 80	0.15	3.4
2700	278							35 x 100	0.15	3.7
3300	338	35 x 50	0.15	2.5				35 x 120	0.15	4.5
4700	478				35 x 80	0.15	3.4	51 x 80	0.20	5.6
6800	688	35 x 80	0.20	3.7	35 x 100	0.15	4.2	51 x 100	0.20	7.5
8200	828				35 x 120	0.15	5.0	51 x 120	0.20	8.1
10000	109	35 x 100	0.20	4.9	51 x 80	0.20	5.2	63.5 x 100	0.20	9.8
12000	129	35 x 120	0.20	5.4				63.5 x 120	0.20	10.8
15000	159	51 x 80	0.25	6.0				76 x 100	0.20	12.7
18000	189				51 x 120	0.20	8.1	76 x 120	0.20	14.0
22000	229	51 x 100	0.30	7.1	63.5 x 100	0.25	8.6	76 x 130	0.20	16.6
								76 x 140	0.20	16.6
27000	279	51 x 120	0.30	8.6	63.5 x 120	0.25	10.3			
33000	339	63.5 x 100	0.35	9.3	76 x 100	0.25	11.1	90 x 140	0.25	18.9
39000	399				76 x 120	0.25	12.4			
47000	479	63.5 x 120	0.35	12.0	76 x 140	0.25	14.3			
68000	689	76 x 120	0.35	15.4	90 x 140	0.30	18.0			
82000	829	76 x 140	0.35	18.1						
100000	10T	90 x 140	0.40	21.0						

Maximum Allowable Ripple Current (Arms) at 85˚C 120Hz
tan δ at 20˚C 120Hz

Case Size ΦD x L (mm)

Voltage (Code)		200V (2D)			250V (2E)			350V (2V)		
SV		250			300			400		
Cap. (μF)	Code	Case Size	tan δ	Ripple Current	Case Size	tan δ	Ripple Current	Case Size	tan δ	Ripple Current
390	397							35 x 50	0.25	1.9
560	567				35 x 50	0.15	1.3			
680	687							35 x 80	0.25	2.9
820	827	35 x 50	0.15	1.6						
1000	108							35 x 100	0.25	3.8
1200	128				35 x 80	0.15	2.3	35 x 120	0.25	4.2
1500	158				35 x 100	0.15	3.0	51 x 80	0.25	4.5
1800	188	35 x 80	0.15	2.8	35 x 120	0.15	3.3			
2200	228	35 x 100	0.15	3.6	51 x 80	0.15	3.7	51 x 90	0.25	5.8
2700	278	35 x 120	0.15	4.0						
3300	338	51 x 80	0.15	4.5	51 x 100	0.15	5.1	51 x 130	0.25	8.3
								63.5 x 90	0.25	8.0
3900	398				51 x 120	0.15	5.9	63.5 x 110	0.25	9.2
4700	478	51 x 100	0.15	6.5	63.5 x 95	0.20	6.7	63.5 x 130	0.25	10.9
					63.5 x 100	0.20	6.9	76 x 90	0.25	10.3
5600	568	51 x 120	0.15	7.6				76 x 115	0.25	11.7
6800	688				63.5 x 120	0.20	8.7	76 x 130	0.25	14.0
8200	828	63.5 x 100	0.20	9.5				76 x 155	0.25	15.6
10000	109	63.5 x 120	0.20	11.0	76 x 120	0.20	11.1			
					76 x 150	0.20	12.2			
12000	129	76 x 100	0.20	11.5	76 x 140	0.20	13.0	90 x 150	0.25	20.0
15000	159	76 x 120	0.20	12.8	76 x 155	0.25	16.1			
					90 x 140	0.20	14.9			
18000	189	76 x 140	0.20	15.0						
22000	229	90 x 140	0.25	15.6	90 x 150	0.20	18.5			
					90 x 155	0.20	19.0			

Maximum Allowable Ripple Current (Arms) at 85˚C 120Hz
tan δ at 20˚C 120Hz

Case Size ΦD x L (mm)

Specifications are subject to change without notice. Should a safety or technical concern arise regarding the product, please be sure to contact our sales offices or agents immediately.

SAMXON®
Aluminum Electrolytic Capacitors

+85˚C, Screw Terminal Type (螺釘型), Standard (標準品)

STANDARD RATINGS

Voltage (Code)		400V (2G)			450V (2W)			500V (2H)		
SV		450			500			550		
Cap. (μF)	Code	Case Size	tan δ	Ripple Current	Case Size	tan δ	Ripple Current	Case Size	tan δ	Ripple Current
470	477							51 x 80	0.25	1.8
680	687							51 x 105	0.25	2.5
820	827							51 x 105	0.25	2.8
1000	108	51 x 80	0.25	3.4	51 x 80	0.25	3.5	51 x 115	0.25	3.2
1200	128	51 x 80	0.25	3.8	51 x 100	0.25	4.5			
1500	158	51 x 105	0.25	4.5	51 x 105	0.25	5.0	51 x 115	0.25	4.0
								63.5 x 95	0.25	4.0
1800	188	51 x 105	0.25	5.2	51 x 115	0.25	5.6	63.5 x 115	0.25	4.8
2200	228	63.5 x 95	0.25	6.4	51 x 130	0.25	6.5	63.5 x 130	0.25	5.7
		51 x 100	0.25	5.6	63.5 x 95	0.25	6.5			
		51 x 140	0.25	6.5						
2700	278	51 x 130	0.25	7.1	63.5 x 115	0.25	7.8	76 x 115	0.25	6.5
3300	338	63.5 x 115	0.25	8.5	63.5 x 130	0.25	9.1			
					76 x 115	0.25	9.0			
3900	398	63.5 x 130	0.25	9.7	63.5 x 160	0.25	9.5	76 x 130	0.25	8.4
					76 x 115	0.25	9.7			
4700	478	63.5 x 160	0.25	10.5	76 x 130	0.25	11.2			
		76 x 105	0.25	10.3	90 x 120	0.25	11.5			
		76 x 115	0.25	10.7						
5600	568	63.5 x 190	0.25	12.0	76 x 155	0.25	13.3			
		76 x 115	0.25	11.5						
		76 x 130	0.25	12.2						
6800	688	76 x 150	0.25	14.4	76 x 155	0.25	14.4			
					76 x 170	0.25	15.0			
		76 x 155	0.25	14.6	90 x 155	0.25	15.3			
8200	828	76 x 155	0.25	14.6	90 x 155	0.25	17.0			
		76 x 170	0.25	15.0						
		90 x 150	0.25	16.5						
		90 x 155	0.25	16.8						
10000	109	76 x 170	0.25	17.5	90 x 170	0.25	18.5			
		90 x 130	0.25	17.1						
		90 x 150	0.25	18.2						
		90 x 155	0.25	18.5						
		90 x 160	0.25	18.7						
12000	129	90 x 170	0.25	20.5	90 x 230	0.25	23.5			
15000	159	90 x 230	0.25	26.5						

Maximum Allowable Ripple Current (Arms) at 85˚C 120Hz
tan δ at 20˚C 120Hz

Case Size ΦD x L (mm)

Voltage (Code)		550V (25)			600V (26)			630V (2J)		
SV		600			650			680		
Cap. (μF)	Code	Case Size	tan δ	Ripple Current	Case Size	tan δ	Ripple Current	Case Size	tan δ	Ripple Current
100	107	35 x 50	0.25	0.6						
180	187	35 x 80	0.25	1.0						
270	277	35 x 100	0.25	1.3						
330	337	35 x 120	0.25	1.6						
390	397	51 x 80	0.25	1.7						
560	567	51 x 100	0.25	2.1						
		63.5 x 120	0.25	2.5						
680	687	51 x 130	0.25	2.7						
		63.5 x 130	0.25	3.0						
820	827	51 x 130	0.25	3.1						
		63.5 x 100	0.25	3.5						
1000	108				63.5 x 120	0.30	5.3	63.5 x 130	0.30	5.9
1200	128	76 x 100	0.25	4.2	76 x 100	0.30	6.0	76 x 110	0.30	6.7
1500	158	76 x 100	0.25	4.6	76 x 120	0.30	7.3	76 x 130	0.30	8.1
1800	188	76 x 100	0.25	5.2	76 x 140	0.30	8.6	76 x 150	0.30	9.6
2200	228	76 x 110	0.25	5.9	90 x 120	0.30	9.6	90 x 130	0.30	10.7
2700	278				90 x 140	0.30	11.3	90 x 150	0.30	12.6
3300	338	76 x 140	0.25	8.0	90 x 160	0.30	13.2	90 x 170	0.30	14.7
3900	398				90 x 180	0.30	15.6	90 x 190	0.30	17.3

Maximum Allowable Ripple Current (Arms) at 85˚C 120Hz
tan δ at 20˚C 120Hz

Case Size ΦD x L (mm)

Specifications are subject to change without notice. Should a safety or technical concern arise regarding the product, please be sure to contact our sales offices or agents immediately.

FEATURES

- Load life of 2,000 hours application of ripple current at 85˚C.
- Higher ripple current than WR series, high reliability type.
- Inverter-use.

SPECIFICATIONS

Item	Performance Characteristics
Operating Temperature Range	-25 to +85˚C
Rated Working Voltage Range	350 to 450V
Nominal Capacitance Range	390 to 22000μF
Capacitance Tolerance	±20% at 120Hz, +20˚C
Leakage Current	I ≤0.02CV (μA) or 5 (mA) whichever is smaller measured after 5 minutes application of rated working voltage at +20˚C
tan δ (120Hz, +20˚C)	0.25
Low Temperature Characteristics	Impedance ratio max. at 120Hz Working Voltage (V): 350~450 Z-25˚C / Z+20˚C: 8
High Temperature Loading	Test time : 2,000 hours Test temperature : +85˚C Test conditions : Rated DC working voltage with rated ripple current Post test requirements at +20˚C Leakage current : ≤Initial specified value Cap. change : within ±20% of the initial measured value tan δ : ≤200% of the initial specified value
Shelf Life	At +85˚C no voltage applied after 1,000 hours and then being stabilized at +20˚C the capacitors shall meet the following limits Leakage current : ≤Initial specified value Cap. change : within ±20% of the initial measured value tan δ : ≤175% of the initial specified value
Industrial Standard	JIS C - 5101-4 (IEC 60384-4)

RIPPLE CURRENT MULTIPLIER

Frequency Coefficient

Coefficient / Freq. (Hz) / Rated Voltage	50	120	300	1k	10k~
<160V	0.80	1.00	1.08	1.15	1.15
≥160V	0.80	1.00	1.08	1.15	1.20

PART NUMBER SYSTEM (EXAMPLE : 350V 2200μF)

1	2 3	4 5 6	7	8 9	10	11 12	13 14
E	WI	228	M	2V	S	95	O5

- Type (Terminal Code)
- Case Length (95mm)
- Diameter (51mm)
- Voltage (350V)
- Tolerance (±20%)
- Capacitance (2200μF)
- Series
- E-CAP

CASE SIZE TABLE

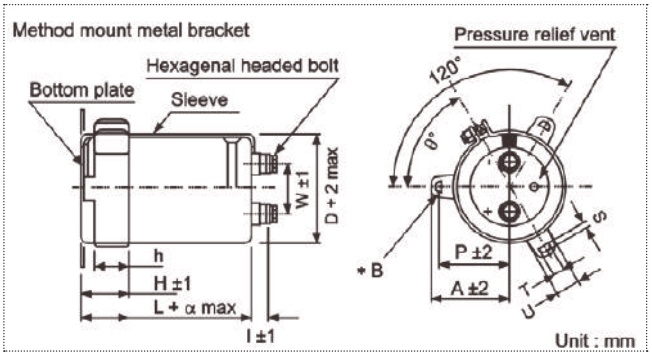

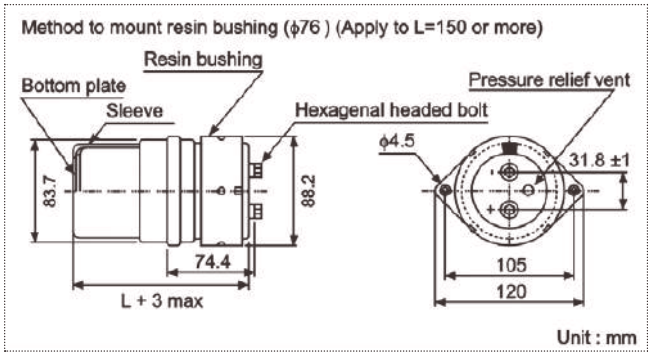

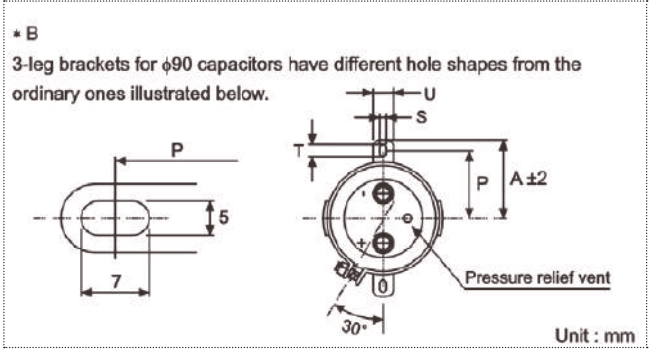

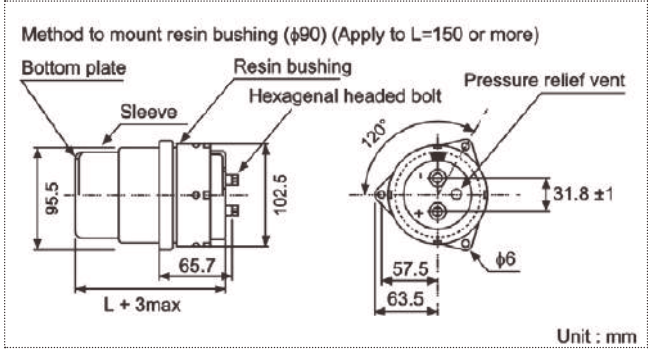

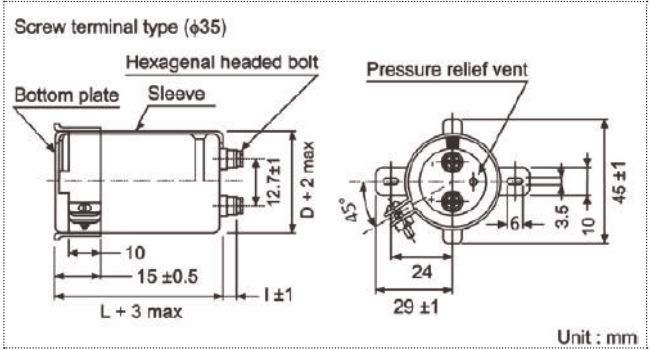

Dimension of terminal pitch (w) and Nominal dia. of bolt

ΦD	w	α	Nominal dia. of bolt
35	12.7	3	M5
51	22.0	3	M5
63.5	28.6	3	M5
76	31.8	3	M5
90	31.8	3	M5

Dimensions of mounting bracket

Voltage (Code)		3-Leg				2-Leg				
Symbol	ΦD	51	63.5	76	90	35	51	63.5	76	90
P		32.5	38.1	44.5	50.8	24	33.2	40.5	46.5	53
A		38.5	43	49.2	58.5	29	40	46.5	53	59
T		7.5	8.0	7.0	8.0	6.0	6.0	7.0	6.0	6.0
S		5.0	5.0	5.0	5.0	3.5	4.5	4.5	4.5	4.5
U		12	14	14	18	10	14	14	14	14
θ˚		60	60	60	60	30	30	30	30	30
H		20	25	30	35	15	25	35	35	35
h		15	20	24	25	10	15	20	20	20

STANDARD RATINGS

Voltage (Code)		350V (2V)		400V (2G)		450V (2W)	
SV		400		450		500	
Cap. (μF)	Code	Case Size	Ripple Current	Case Size	Ripple Current	Case Size	Ripple Current
390	397	35 x 50	1.9				
560	567			35 x 80	2.8		
680	687	35 x 80	3.1				
820	827			35 x 100	3.8		
1000	108	35 x 100	4.2	35 x 120	4.5	51 x 75	5.4
1200	128	35 x 120	4.8	51 x 75	4.9	51 x 95	6.6
1500	158	51 x 75	5.3			51 x 115	7.6
1800	188			51 x 95	6.4	51 x 130	8.3
2200	228	51 x 95	7.1	51 x 130	8.1	63.5 x 95	10.0
2700	278			63.5 x 96	8.9	63.5 x 115	11.7
3300	338	51 x 130	10.0	63.5 x 115	11.3	63.5 x 130	12.0
3900	398	63.5 x 115	11.7	63.5 x 130	12.3	76 x 115	13.3
4700	478	63.5 x 130	13.5	76 x 106	13.8	76 x 130	15.4
				76 x 115	14.3		
5600	568	76 x 115	15.5	76 x 130	16.5	76 x 155	18.2
6800	688	76 x 130	17.9	76 x 144	19.0	90 x 155	20.6
				76 x 155	19.6		
8200	828	76 x 155	20.4	90 x 155	22.0	90 x 155	22.1
10000	109	90 x 130	21.7	90 x 155	23.6	90 x 195	27.2
12000	129	90 x 155	24.7	90 x 195	27.5	90 x 235	32.1
15000	159	90 x 195	28.6	90 x 235	32.1		
18000	189	90 x 235	34.1				
22000	229			90 x 235	38.9		

Maximum Allowable Ripple Current (Arms) at 85˚C 120Hz

Case Size ΦD x L (mm)

Specifications are subject to change without notice. Should a safety or technical concern arise regarding the product, please be sure to contact our sales offices or agents immediately.

SAMXON®
Aluminum Electrolytic Capacitors

+105˚C, Screw Terminal Type (螺釘型), Standard (標準品)

FEATURES

- Load life of 2,000 hours application of ripple current at 105˚C.
- Suitable for use in electronic and industrial equipments such as computer, programming control exchanger for power supplies filtering and energy storaging.

SPECIFICATIONS

Item	Performance Characteristics	
Operating Temperature Range	-40 to +105˚C	-25 to +105˚C
Rated Working Voltage Range	10 to 100V	160 to 500V
Nominal Capacitance Range	180 to 680000μF	
Capacitance Tolerance	±20% at 120Hz, +20˚C	
Leakage Current	I ≤0.02CV (μA) or 5 (mA) whichever is smaller measured after 5 minutes application of rated working voltage at +20˚C	
tan δ (120Hz, +20˚C)	The values shown in the STANDARD RATINGS tables	
Low Temperature Characteristics	Impedance ratio max. at 120Hz Working Voltage (V): 10~100 / 160~500 Z-25˚C / Z+20˚C: – / 8 Z-40˚C / Z+20˚C: 15 / –	
High Temperature Loading	Test time : 2,000 hours Test temperature : +105˚C Test conditions : Rated DC working voltage with rated ripple current	Post test requirements at +20˚C Leakage current : ≤Initial specified value Cap. change : within ±20% of the initial measured value tan δ : ≤200% of the initial specified value
Shelf Life	At +105˚C no voltage applied after 1,000 hours and then being stabilized at +20˚C the capacitors shall meet the following limits Leakage current : ≤Initial specified value Cap. change : within ±20% of the initial measured value tan δ : ≤200% of the initial specified value	
Industrial Standard	JIS C - 5101-4 (IEC 60384-4)	

RIPPLE CURRENT MULTIPLIER

Frequency Coefficient

Coefficient / Freq. (Hz) / Rated Voltage	50	120	300	1k	10k~
<160V	0.80	1.00	1.08	1.15	1.15
≥160V	0.80	1.00	1.08	1.15	1.20

PART NUMBER SYSTEM (EXAMPLE : 350V 2700μF)

1	2 3	4 5 6	7	8 9	10	11 12	13 14
E	WT	278	M	2V	T	1L	OO

- Type (Terminal Code)
- Case Length (100mm)
- Diameter (63.5mm)
- Voltage (350V)
- Tolerance (±20%)
- Capacitance (2700μF)
- Series
- E-CAP

CASE SIZE TABLE

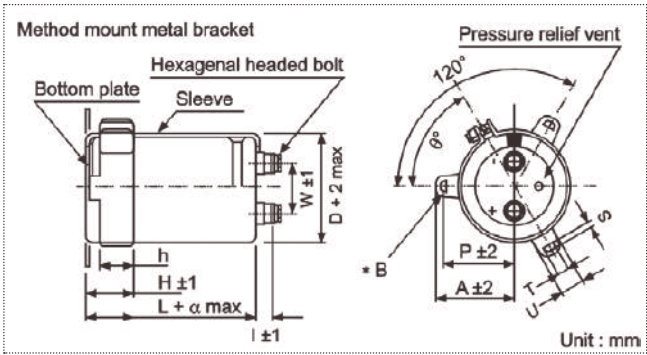

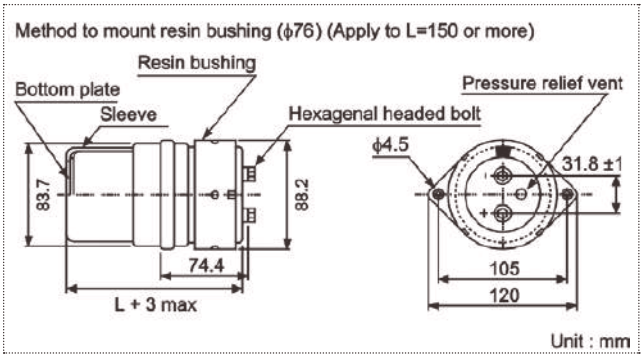

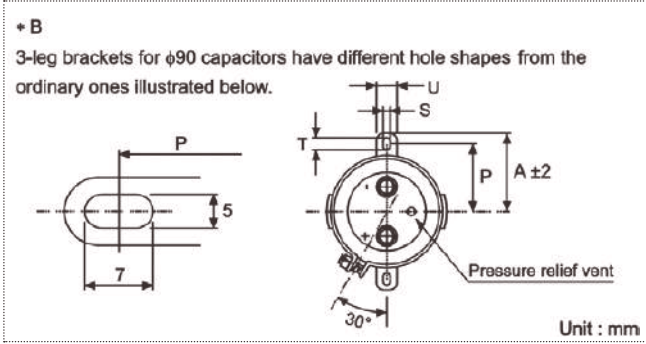

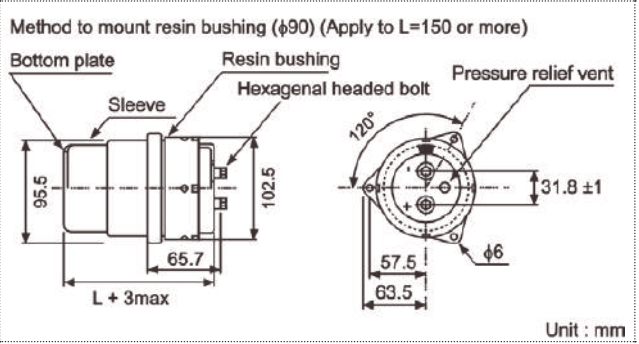

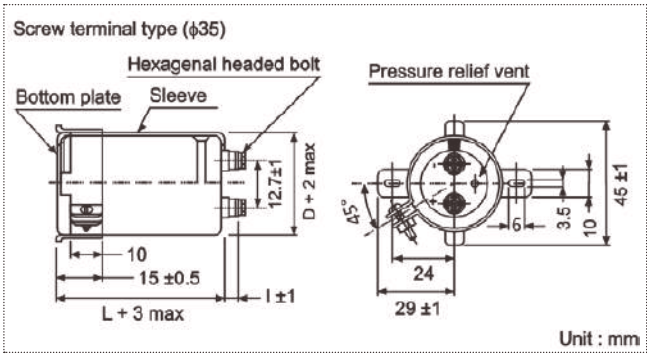

Dimension of terminal pitch (w) and Nominal dia. of bolt

ΦD	w	α	Nominal dia. of bolt
35	12.7	3	M5
51	22.0	3	M5
63.5	28.6	3	M5
76	31.8	3	M5
90	31.8	3	M5

Dimensions of mounting bracket

Voltage (Code)		3 - Leg				2 - Leg				
Symbol	ΦD	51	63.5	76	90	35	51	63.5	76	90
P		32.5	38.1	44.5	50.8	24	33.2	40.5	46.5	53
A		38.5	43	49.2	58.5	29	40	46.5	53	59
T		7.5	8.0	7.0	8.0	6.0	6.0	7.0	6.0	6.0
S		5.0	5.0	5.0	5.0	3.5	4.5	4.5	4.5	4.5
U		12	14	14	18	10	14	14	14	14
θ˚		60	60	60	60	30	30	30	30	30
H		20	25	30	35	15	25	35	35	35
h		15	20	24	25	10	15	20	20	20

SAMXON®
Aluminum Electrolytic Capacitors

+105˚C, Screw Terminal Type (螺釘型), Standard (標準品)

STANDARD RATINGS

Voltage (Code)		10V (1A)			16V (1C)			25V (1E)		
SV		13			20			32		
Cap. (μF)	Code	Case Size	tan δ	Ripple Current	Case Size	tan δ	Ripple Current	Case Size	tan δ	Ripple Current
12000	129							35 x 50	0.35	3.7
15000	159							35 x 50	0.35	4.1
18000	189				35 x 50	0.40	4.2	35 x 60	0.35	4.8
22000	229				35 x 50	0.40	4.7	35 x 60	0.35	5.3
27000	279	35 x 50	0.45	4.9	35 x 60	0.40	5.5	35 x 80	0.35	6.4
33000	339	35 x 50	0.50	5.1	35 x 60	0.45	5.7	35 x 80	0.40	6.7
39000	399	35 x 60	0.50	5.9	35 x 80	0.45	6.8	35 x 100	0.40	7.8
47000	479	35 x 80	0.50	7.1	35 x 80	0.50	7.1	35 x 120	0.40	9.3
56000	569	35 x 80	0.60	7.1	35 x 100	0.50	8.4	51 x 80	0.45	9.7
68000	689	35 x 100	0.60	8.5	35 x 100	0.55	8.8	51 x 100	0.45	11.2
82000	829	35 x 100	0.65	8.9	51 x 80	0.55	10.7	51 x 100	0.50	11.2
100000	10T	35 x 120	0.65	10.7	51 x 80	0.65	10.8	51 x 120	0.50	14.8
120000	12T	51 x 80	0.75	11.0	51 x 100	0.65	13.1	63.5 x 100	0.65	14.9
150000	15T	51 x 100	0.80	13.2	51 x 120	0.70	15.3	63.5 x 120	0.65	17.9
180000	18T	51 x 120	0.80	15.7	51 x 120	0.80	15.7	63.5 x 120	0.80	17.9
220000	22T	51 x 120	0.85	16.8	63.5 x 120	0.85	19.2	76 x 120	0.85	21.3
270000	27T	63.5 x 120	1.00	19.6	63.5 x 120	1.00	19.6	76 x 120	1.00	21.7
330000	33T	63.5 x 120	1.20	19.7	76 x 120	1.30	21.1	76 x 140	1.20	23.4
390000	39T	76 x 120	1.50	21.3	76 x 120	1.50	21.3	90 x 140	1.50	24.9
470000	47T	76 x 120	1.80	21.4	76 x 140	1.60	24.2			
560000	56T	76 x 140	2.00	23.6	90 x 140	2.00	28.1			
680000	68T	90 x 140	2.40	26.0	90 x 140	2.40	28.5			

Maximum Allowable Ripple Current (Arms) at 105˚C 120Hz
tan δ at 20˚C 120Hz

Case Size ΦD x L (mm)

Voltage (Code)		35V (1V)			50V (1H)			63V (1J)		
SV		44			63			79		
Cap. (μF)	Code	Case Size	tan δ	Ripple Current	Case Size	tan δ	Ripple Current	Case Size	tan δ	Ripple Current
2700	278							35 x 50	0.20	2.3
3300	338							35 x 50	0.20	2.5
3900	398				35 x 50	0.20	2.8	35 x 50	0.20	2.8
4700	478				35 x 50	0.20	3.1	35 x 50	0.20	3.1
5600	568				35 x 50	0.20	3.3	35 x 60	0.20	3.5
6800	688				35 x 50	0.25	3.3	35 x 60	0.20	3.9
8200	828	35 x 50	0.30	3.3	35 x 60	0.25	3.8	35 x 80	0.20	4.7
10000	109	35 x 50	0.30	3.6	35 x 80	0.25	4.6	35 x 80	0.25	4.7
12000	129	35 x 60	0.30	4.2	35 x 80	0.25	5.1	35 x 100	0.25	5.5
15000	159	35 x 60	0.30	4.7	35 x 80	0.25	5.7	35 x 120	0.25	6.6
18000	189	35 x 80	0.30	5.7	35 x 100	0.25	6.7	51 x 80	0.25	7.4
22000	229	35 x 80	0.30	6.3	35 x 120	0.25	8.1	51 x 100	0.25	9.0
27000	279	35 x 100	0.30	7.5	51 x 80	0.25	9.1	51 x 120	0.25	10.9
33000	339	35 x 120	0.30	9.0	51 x 100	0.25	11.1	51 x 120	0.25	12.0
39000	399	51 x 80	0.35	9.2	51 x 120	0.25	13.1	63.5 x 100	0.30	12.5
47000	479	51 x 100	0.35	11.2	51 x 120	0.30	13.9	63.5 x 120	0.30	14.9
56000	569	51 x 100	0.40	11.4	63.5 x 100	0.35	13.9	63.5 x 120	0.30	16.3
68000	689	51 x 120	0.40	13.6	63.5 x 120	0.35	16.6	76 x 120	0.35	18.4
82000	829	63.5 x 100	0.45	14.8	76 x 120	0.40	18.9	76 x 140	0.40	20.0
100000	10T	63.5 x 120	0.45	17.6	76 x 120	0.45	19.5	76 x 140	0.50	20.0
120000	12T	63.5 x 120	0.55	17.6	76 x 120	0.55	19.5	90 x 140	0.60	21.8
150000	15T	76 x 120	0.65	19.8	90 x 140	0.60	23.9			
180000	18T	76 x 120	0.80	19.8	90 x 140	0.75	23.9			
220000	22T	76 x 140	0.80	23.4						
270000	27T	90 x 140	1.00	25.5						

Maximum Allowable Ripple Current (Arms) at 105˚C 120Hz
tan δ at 20˚C 120Hz

Case Size ΦD x L (mm)

Specifications are subject to change without notice. Should a safety or technical concern arise regarding the product, please be sure to contact our sales offices or agents immediately.

STANDARD RATINGS

Voltage (Code)		80V (1K)			100V (2A)			160V (2C)		
SV		100			125			200		
Cap. (μF)	Code	Case Size	tan δ	Ripple Current	Case Size	tan δ	Ripple Current	Case Size	tan δ	Ripple Current
560	567							35 x 50	0.15	1.2
680	687							35 x 50	0.15	1.3
820	827							35 x 50	0.15	1.4
1000	108							35 x 50	0.15	1.6
1200	128							35 x 60	0.15	1.9
1500	158							35 x 60	0.15	2.1
1800	188				35 x 50	0.10	2.7	35 x 80	0.15	2.5
2200	228	35 x 50	0.15	2.4	35 x 50	0.10	3.0	35 x 80	0.15	2.8
2700	278	35 x 50	0.15	2.7	35 x 60	0.10	3.5	35 x 100	0.15	3.3
3300	338	35 x 50	0.15	3.0	35 x 80	0.10	4.2	35 x 120	0.15	3.8
3900	398	35 x 60	0.15	3.4	35 x 80	0.12	4.2	51 x 80	0.20	3.8
4700	478	35 x 60	0.15	3.7	35 x 100	0.12	5.0	51 x 100	0.20	4.6
5600	568	35 x 80	0.15	4.5	35 x 100	0.12	5.4	51 x 100	0.20	5.1
6800	688	35 x 80	0.15	4.9	35 x 120	0.15	5.8	51 x 120	0.20	6.1
8200	828	35 x 100	0.20	5.1	51 x 80	0.15	6.4	63.5 x 100	0.20	7.0
10000	109	35 x 120	0.20	6.1	51 x 100	0.15	7.8	63.5 x 120	0.20	8.4
12000	129	51 x 80	0.20	6.7	51 x 120	0.15	9.3	76 x 100	0.20	9.4
15000	159	51 x 100	0.20	8.3	51 x 120	0.15	10.4	76 x 120	0.20	11.4
18000	189	51 x 120	0.20	9.9	63.5 x 100	0.20	10.4	76 x 140	0.20	13.4
22000	229	51 x 120	0.20	11.0	63.5 x 120	0.20	12.5	90 x 140	0.25	14.5
27000	279	63.5 x 100	0.25	11.4	76 x 120	0.25	13.7	90 x 140	0.25	16.0
33000	339	76 x 100	0.25	13.9	76 x 120	0.25	15.2			
39000	399	76 x 100	0.30	13.9	76 x 140	0.30	16.1			
47000	479	76 x 120	0.30	16.5	90 x 140	0.30	19.3			
56000	569	76 x 120	0.30	18.1	90 x 140	0.30	21.1			
68000	689	76 x 140	0.35	19.7						
82000	829	90 x 140	0.40	22.1						

Maximum Allowable Ripple Current (Arms) at 105˚C 120Hz
tan δ at 20˚C 120Hz

Case Size ΦD x L (mm)

Voltage (Code)		200V (2D)			250V (2E)			315V (2F)		
SV		250			300			365		
Cap. (μF)	Code	Case Size	tan δ	Ripple Current	Case Size	tan δ	Ripple Current	Case Size	tan δ	Ripple Current
180	187							35 x 50	0.10	0.8
220	227							35 x 50	0.10	0.9
270	277				35 x 50	0.15	0.8	35 x 50	0.10	1.0
330	337	35 x 50	0.15	0.9	35 x 50	0.15	0.9	35 x 50	0.10	1.1
390	397	35 x 50	0.15	1.0	35 x 50	0.15	1.0	35 x 50	0.10	1.2
470	477	35 x 50	0.15	1.1	35 x 50	0.15	1.1	35 x 60	0.10	1.4
560	567	35 x 50	0.15	1.2	35 x 50	0.15	1.2	35 x 60	0.10	1.5
680	687	35 x 50	0.15	1.3	35 x 60	0.15	1.4	35 x 80	0.10	1.7
820	827	35 x 50	0.15	1.4	35 x 80	0.15	1.6	35 x 80	0.15	1.7
1000	108	35 x 60	0.15	1.7	35 x 80	0.20	1.6	35 x 100	0.15	2.0
1200	128	35 x 60	0.15	1.9	35 x 80	0.20	1.8	35 x 120	0.15	2.4
1500	158	35 x 80	0.15	2.3	35 x 100	0.20	2.1	51 x 80	0.15	2.7
1800	188	35 x 80	0.15	2.5	35 x 120	0.20	2.5	51 x 100	0.15	3.3
2200	228	35 x 100	0.15	3.0	51 x 80	0.20	2.9	51 x 120	0.15	4.0
2700	278	35 x 120	0.15	3.6	51 x 100	0.20	3.5	51 x 120	0.15	4.4
3300	338	51 x 80	0.15	4.1	51 x 120	0.20	4.2	63.5 x 100	0.15	5.1
3900	398	51 x 100	0.15	4.9	51 x 120	0.20	4.6	63.5 x 120	0.15	6.0
4700	478	63.5 x 100	0.20	5.3	63.5 x 120	0.20	5.7	76 x 100	0.15	6.8
5600	568	63.5 x 100	0.20	5.8	63.5 x 120	0.20	6.3	76 x 120	0.15	8.0
6800	688	63.5 x 120	0.20	6.9	76 x 120	0.20	7.7	76 x 130	0.15	9.2
8200	828	63.5 x 120	0.20	7.6	76 x 120	0.20	8.4	90 x 140	0.15	11.4
10000	109	76 x 120	0.20	9.3	76 x 140	0.20	10.0	90 x 140	0.15	12.6
12000	129	76 x 120	0.20	10.2	90 x 140	0.20	11.9			
15000	159	76 x 140	0.20	12.2						
18000	189	90 x 140	0.25	13.1						

Maximum Allowable Ripple Current (Arms) at 105˚C 120Hz
tan δ at 20˚C 120Hz

Case Size ΦD x L (mm)

Specifications are subject to change without notice. Should a safety or technical concern arise regarding the product, please be sure to contact our sales offices or agents immediately.

SAMXON®
Aluminum Electrolytic Capacitors

+105˚C, Screw Terminal Type (螺釘型), Standard (標準品)

STANDARD RATINGS

Voltage (Code)		350V (2V)			400V (2G)			450V (2W)		
SV		400			450			500		
Cap. (μF)	Code	Case Size	tan δ	Ripple Current	Case Size	tan δ	Ripple Current	Case Size	tan δ	Ripple Current
470	477							51 x 80	0.15	1.4
680	687							51 x 80	0.15	1.6
1000	108				51 x 80	0.15	2.2	51 x 80	0.15	1.8
1200	128	51 x 80	0.15	2.4	51 x 80	0.15	2.5			
1500	158	51 x 80	0.15	2.8	51 x 115	0.15	3.0	51 x 115	0.15	3.5
1800	188	51 x 105	0.15	3.2						
2200	228	51 x 115	0.15	3.8	63.5 x 95	0.15	4.0	63.5 x 115	0.15	5.0
2700	278	63.5 x 95	0.15	4.5				76 x 100	0.15	5.8
3300	338				63.5 x 115	0.15	5.0	76 x 100	0.15	6.5
3900	398	76 x 90	0.15	6.0						
4700	478				76 x 115	0.15	7.0	76 x 130	0.15	8.0
5600	568	76 x 130	0.15	8.3	76 x 140	0.15	8.5	76 x 155	0.15	9.0
6800	688	76 x 140	0.15	9.5	90 x 130	0.15	10.0	90 x 155	0.15	10.5
8200	828	90 x 140	0.15	11.4				90 x 195	0.15	13.0
10000	109							90 x 195	0.15	14.0
12000	129							90 x 230	0.15	15.7
15000	159							90 x 250	0.15	18.2

Maximum Allowable Ripple Current (Arms) at 105˚C 120Hz
tan δ at 20˚C 120Hz

Case Size ΦD x L (mm)

Voltage (Code)		500V (2H)		
SV		550		
Cap. (μF)	Code	Case Size	tan δ	Ripple Current
330	337	51 x 80	0.15	1.1
470	477	51 x 80	0.15	1.3
680	687	51 x 105	0.15	1.8
1000	108	51 x 115	0.15	2.1
1500	158	63.5 x 115	0.15	3.0
2200	228	63.5 x 130	0.15	3.7
2700	278	63.5 x 150	0.15	4.4
		76 x 115	0.15	4.4
3300	338	63.5 x 170	0.15	5.2
		76 x 155	0.15	5.2
3900	398	76 x 155	0.15	5.8
4700	478	76 x 190	0.15	6.9
		90 x 155	0.15	6.9
5600	568	90 x 155	0.15	7.2
6800	688	90 x 170	0.15	8.3
8200	828	90 x 220	0.15	10.2
10000	109	90 x 250	0.15	12.0

Maximum Allowable Ripple Current (Arms) at 105˚C 120Hz
tan δ at 20˚C 120Hz

Case Size ΦD x L (mm)

Specifications are subject to change without notice. Should a safety or technical concern arise regarding the product, please be sure to contact our sales offices or agents immediately.

FEATURES

- High voltage and capacitance, high ripple, high reliability, guarantee 5,000 hours load life at 85˚C.
- Suitable for use in changeable current circuits in changeable frequencies air-condition etc.

SPECIFICATIONS

Item	Performance Characteristics
Operating Temperature Range	-40 to +85˚C ; -25 to +85˚C
Rated Working Voltage Range	10 to 100V ; 160 to 550V
Nominal Capacitance Range	1000 to 1500000μF
Capacitance Tolerance	±20% at 120Hz, +20˚C
Leakage Current	I ≤0.02CV (μA) or 5 (mA) whichever is smaller measured after 5 minutes application of rated working voltage at +20˚C

tan δ (120Hz, +20˚C)

ΦD	L \ V	10	16	25	35	50	63	80	100
35	80~100	0.6	0.4	0.4	0.3	0.3	0.3	0.2	0.1
	120	0.7	0.6	0.4	0.3	0.3	0.3	0.2	0.2
51	70~100	0.9	0.6	0.5	0.4	0.3	0.3	0.2	0.2
	120~140	1	0.8	0.5	0.4	0.3	0.3	0.2	0.2
63.5	100	0.9	–	–	0.5	0.4	0.3	0.3	–
	105~220	1.2	0.80	0.7	–	–	0.3	0.3	0.2
76	100	1.6	–	–	0.7	–	–	–	–
	120~140	1.6	1.1	0.8	0.8	0.6	0.5	0.4	0.3
90	140~220	2	1.5	1	0.9	0.8	0.6	0.4	0.3
100	250	2.4	1.5	1	0.9	0.8	0.6	0.4	0.3

ΦD	L \ V	160~250	350~450
35	80~120	0.15	0.25
51	70~140	0.15	0.25
63.5	90~190	0.20	0.25
76	90~220	0.20	0.25
90	130~230	0.20	0.25
100	250	0.25	0.25

Low Temperature Characteristics

Impedance ratio max. at 120Hz

Working Voltage (V)	10~100	160~500
Z-25˚C / Z+20˚C	–	8
Z-40˚C / Z+20˚C	15	–

High Temperature Loading

Test time : 5,000 hours
Test temperature : +85˚C
Test conditions : Rated DC working voltage with rated ripple current

Post test requirements at +20˚C
Leakage current : ≤Initial specified value
Cap. change : within ±20% of the initial measured value
tan δ : ≤200% of the initial specified value

Shelf Life

At +85˚C no voltage applied after 1,000 hours and then being stabilized at +20˚C the capacitors shall meet the following limits
Leakage current : ≤Initial specified value
Cap. change : within ±20% of the initial measured value
tan δ : ≤200% of the initial specified value

Industrial Standard: JIS C - 5101-4 (IEC 60384-4)

RIPPLE CURRENT MULTIPLIER

Frequency Coefficient

Coefficient / Freq. (Hz) / Rated Voltage	50	120	300	1k	10k~
<160V	0.80	1.00	1.08	1.15	1.15
≥160V	0.80	1.00	1.08	1.15	1.20

PART NUMBER SYSTEM (EXAMPLE : 400V 2200μF)

1	2 3	4 5 6	7	8 9	10	11 12	13 14
E	WX	228	M	2G	S	1M	OO

- Type (Terminal Code)
- Case Length (110mm)
- Diameter (51mm)
- Voltage (400V)
- Tolerance (±20%)
- Capacitance (2200μF)
- Series
- E-CAP

CASE SIZE TABLE

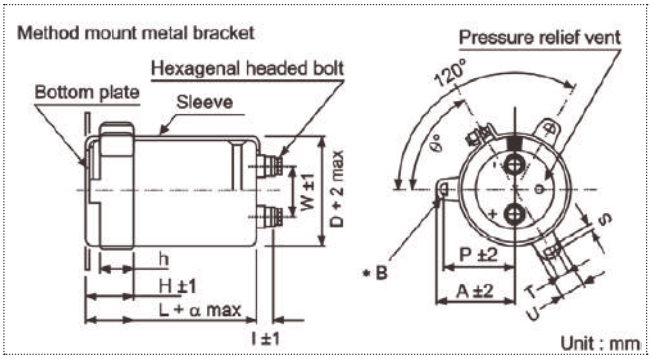

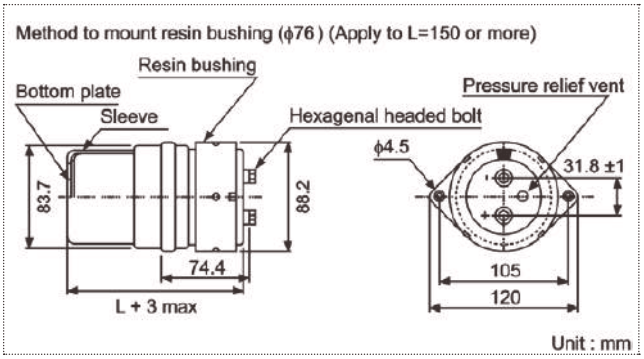

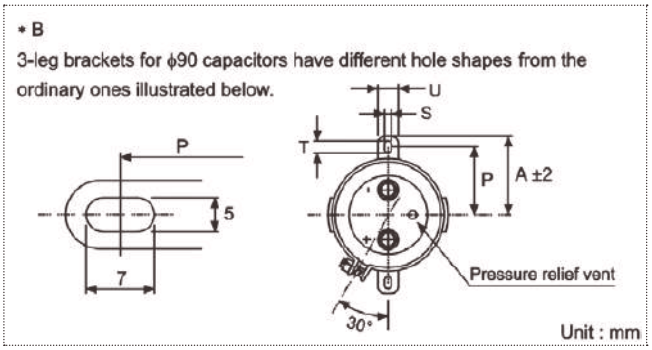

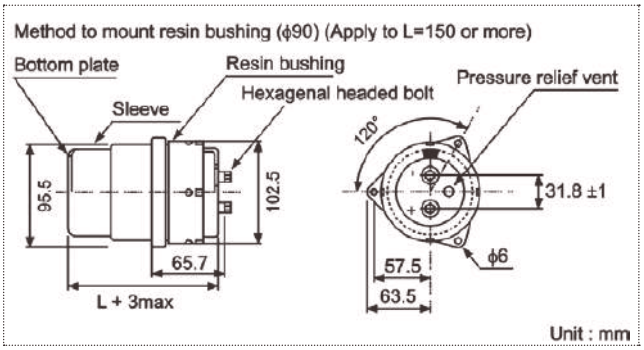

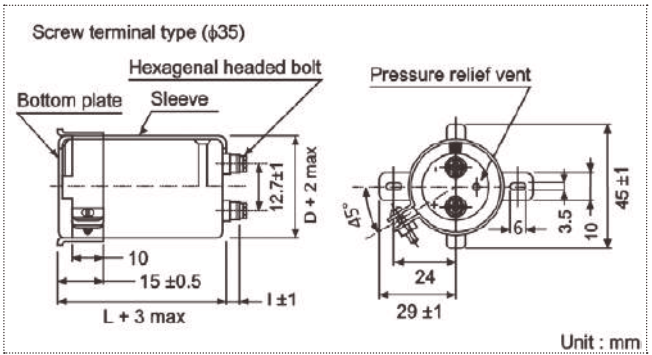

Dimension of terminal pitch (w) and Nominal dia. of bolt

ΦD	w	α	Nominal dia. of bolt
35	12.7	3	M5
51	22.0	3	M5
63.5	28.6	3	M5
76	31.8	3	M5
90	31.8	3	M5

Dimensions of mounting bracket

Voltage (Code)		3 - Leg				2 - Leg				
Symbol	ΦD	51	63.5	76	90	35	51	63.5	76	90
P		32.5	38.1	44.5	50.8	24	33.2	40.5	46.5	53
A		38.5	43	49.2	58.5	29	40	46.5	53	59
T		7.5	8.0	7.0	8.0	6.0	6.0	7.0	6.0	6.0
S		5.0	5.0	5.0	5.0	3.5	4.5	4.5	4.5	4.5
U		12	14	14	18	10	14	14	14	14
θ°		60	60	60	60	30	30	30	30	30
H		20	25	30	35	15	25	35	35	35
h		15	20	24	25	10	15	20	20	20

STANDARD RATINGS

Voltage (Code)		10V (1A)		16V (1C)		25V (1E)		35V (1V)	
SV		13		20		32		44	
Cap. (μF)	Code	Case Size	Ripple Current	Case Size	Ripple Current	Case Size	Ripple Current	Case Size	Ripple Current
33000	339					35 x 80	6.2	35 x 80	6.2
47000	479	35 x 80	6.0	35 x 80	6.4	35 x 100	8.2	35 x 120	8.2
68000	689	35 x 80	7.2	35 x 100	7.9	35 x 120	9.4	51 x 80	9.3
100000	10T	35 x 100	8.8	35 x 120	10.6	51 x 100	12.0	51 x 120	13.6
150000	15T	51 x 80	10.7	51 x 100	11.5	51 x 120	15.3	63.5 x 100	14.5
220000	22T	51 x 100	13.0	51 x 120	15.6	63.5 x 120	18.9	76 x 100	16.8
330000	33T	63.5 x 100	15.9	63.5 x 120	25.1	76 x 120	24.8	76 x 140	24.8
470000	47T	63.5 x 120	19.0	76 x 120	30.5	90 x 170	30.8	90 x 170	32.6
680000	68T	76 x 120	22.8	90 x 170	33.0	90 x 220	33.3	90 x 220	35.2
1000000	10M	90 x 170	27.7	90 x 220	36.0				
1500000	15M	90 x 220	33.9						

Maximum Allowable Ripple Current (Arms) at 85˚C 120Hz — Case Size ΦD x L (mm)

Voltage (Code)		50V (1H)		63V (1J)		80V (1K)		100V (2A)	
SV		63		79		100		125	
Cap. (μF)	Code	Case Size	Ripple Current	Case Size	Ripple Current	Case Size	Ripple Current	Case Size	Ripple Current
4700	478							35 x 80	3.8
6800	688							35 x 100	4.5
10000	109			35 x 80	4.1	35 x 100	4.6	51 x 80	5.4
15000	159	35 x 80	5.4	35 x 100	5.5	35 x 120	6.0	51 x 100	6.6
22000	229	35 x 100	6.1	35 x 120	7.1	51 x 100	7.2	63.5 x 100	7.7
33000	339	51 x 70	7.0	51 x 100	9.7	51 x 120	9.2	76 x 100	10.8
47000	479	51 x 90	8.6	51 x 120	11.7	63.5 x 120	13.8	76 x 120	14.9
68000	689	51 x 120	11.9	63.5 x 120	16.2	63.5 x 140	15.5	76 x 150	18.8
100000	10T	63.5 x 100	14.2	63.5 x 140	20.8	90 x 140	23.4	90 x 170	22.1
150000	15T	76 x 120	18.6	90 x 140	28.6	90 x 170	26.5	90 x 220	27.0
220000	22T	90 x 140	20.3	90 x 170	28.3	90 x 220	28.9		
330000	33T	90 x 170	25.3	90 x 220	31.2				
470000	47T	90 x 220	33.2						

Maximum Allowable Ripple Current (Arms) at 85˚C 120Hz — Case Size ΦD x L (mm)

Voltage (Code)		160V (2C)		200V (2D)		250V (2E)		350V (2V)	
SV		200		250		300		400	
Cap. (μF)	Code	Case Size	Ripple Current	Case Size	Ripple Current	Case Size	Ripple Current	Case Size	Ripple Current
1000	108					35 x 80	2.4		
1500	158			35 x 80	2.9	35 x 100	3.0		
2200	228	35 x 80	3.2	35 x 100	3.5	51 x 80	4.0	51 x 100	7.7
2700	278							51 x 120	9.3
3300	338	35 x 120	4.7	51 x 80	4.8	51 x 100	5.4	51 x 130	10.8
3900	398							63.5 x 120	12.1
4700	478	51 x 80	5.0	51 x 100	6.3	63.5 x 100	7.3	63.5 x 130	14.0
5600	568							63.5 x 160	16.6
								76 x 120	16.1
6800	688	51 x 100	6.4	51 x 140	7.3	63.5 x 120	8.9	63.5 x 190	20.0
								76 x 130	18.6
8200	828							76 x 160	22.2
10000	109	63.5 x 100	9.1	63.5 x 120	9.8	76 x 120	11.8	76 x 170	25.2
12000	129							90 x 160	29.1
15000	159	76 x 100	12.0	76 x 120	13.0	90 x 140	16.4	90 x 190	35.7
22000	229	76 x 140	16.9	90 x 140	15.9	90 x 170	17.9		
33000	339	90 x 140	19.2	90 x 170	19.5	90 x 220	19.7		
47000	479	90 x 170	20.6	90 x 220	20.9				
68000	689	90 x 220	22.3						

Maximum Allowable Ripple Current (Arms) at 85˚C 120Hz — Case Size ΦD x L (mm)

Specifications are subject to change without notice. Should a safety or technical concern arise regarding the product, please be sure to contact our sales offices or agents immediately.

STANDARD RATINGS

Voltage (Code)		400V (2G)		450V (2W)		500V (2H)		550V (25)	
SV		450		500		550		600	
Cap. (μF)	Code	Case Size	Ripple Current	Case Size	Ripple Current	Case Size	Ripple Current	Case Size	Ripple Current
1000	108	51 x 80	5.0	51 x 80	5.0	51 x 110	4.2	51 x 130	4.3
1200	128	51 x 80	5.8	51 x 100	5.7	63.5 x 90	4.8	63.5 x 110	5.0
1500	158	51 x 100	6.4	51 x 100	6.3	63.5 x 90	5.5	63.5 x 130	6.0
1800	188	51 x 100	7.0	51 x 120	7.6	63.5 x 110	6.5	76 x 100	6.4
2200	228	63.5 x 90	8.3	51 x 130	8.8	63.5 x 130	7.7	76 x 110	7.4
		51 x 140	8.5	63.5 x 100	8.5				
2700	278	51 x 130	9.8	63.5 x 120	10.1	76 x 110	8.8	76 x 120	8.5
3300	338	63.5 x 120	11.1	63.5 x 130	11.7	76 x 130	10.4	76 x 140	10.1
				76 x 110	12.0				
3900	398	63.5 x 130	12.7	63.5 x 160	13.8	76 x 130	11.4	76 x 160	11.7
				76 x 120	13.4				
4700	478	63.5 x 130	13.8	76 x 130	15.5	90 x 130	13.7	90 x 150	13.7
		63.5 x 160	15.2	90 x 120	15.0				
		76 x 120	14.7						
5600	568	63.5 x 190	18.2	76 x 155	18.0	90 x 150	15.9	90 x 170	15.8
		76 x 130	16.9	90 x 155	18.3				
6800	688	76 x 150	18.2	76 x 170	20.7	90 x 170	18.5	90 x 200	18.6
				90 x 150	21.0				
8200	828	76 x 155	21.8	90 x 160	24.1	90 x 190	21.4		
		76 x 170	22.8						
		90 x 150	23.0						
10000	109	90 x 160	26.6	90 x 155	26.7				
				90 x 170	27.8				
12000	129	90 x 170	30.0	90 x 230	29.5				
15000	159	90 x 230	32.0						

Maximum Allowable Ripple Current (Arms) at 85˚C 120Hz

Case Size ΦD x L (mm)

Specifications are subject to change without notice. Should a safety or technical concern arise regarding the product, please be sure to contact our sales offices or agents immediately.

FEATURES

- Load life of 5,000 hours application of ripple current at +105˚C.
- High reliability products.

SPECIFICATIONS

Item	Performance Characteristics	
Operating Temperature Range	-40 to +105˚C	-25 to +105˚C
Rated Working Voltage Range	10 to 100V	160 to 500V
Nominal Capacitance Range	330 to 390000μF	
Capacitance Tolerance	±20% at 120Hz, +20˚C	
Leakage Current	I ≤0.02CV (μA) or 5 (mA) whichever is smaller measured after 5 minutes application of rated working voltage at +20˚C	
tan δ (120Hz, +20˚C)	The values shown in the STANDARD RATINGS tables	
Low Temperature Characteristics	Impedance ratio max. at 120Hz Working Voltage (V): 10~100 / 160~500 Z-25˚C / Z+20˚C: – / 8 Z-40˚C / Z+20˚C: 15 / –	
High Temperature Loading	Test time : 5,000 hours Test temperature : +105˚C Test conditions : Rated DC working voltage with rated ripple current	Post test requirements at +20˚C Leakage current : ≤Initial specified value Cap. change : within ±20% of the initial measured value tan δ : ≤200% of the initial specified value
Shelf Life	At +105˚C no voltage applied after 1,000 hours and then being stabilized at +20˚C the capacitors shall meet the following limits Leakage current : ≤Initial specified value Cap. change : within ±20% of the initial measured value tan δ : ≤200% of the initial specified value	
Industrial Standard	JIS C - 5101-4 (IEC 60384-4)	

RIPPLE CURRENT MULTIPLIER

Frequency Coefficient

Coefficient / Freq. (Hz) / Rated Voltage	50	120	300	1k	10k~
<160V	0.80	1.00	1.08	1.15	1.15
≥160V	0.80	1.00	1.08	1.15	1.20

PART NUMBER SYSTEM (EXAMPLE : 350V 6800μF)

1	2 3	4 5 6	7	8 9	10	11 12	13 14
E	WF	688	M	2V	U	1P	OO

- Type (Terminal Code)
- Case Length (130mm)
- Diameter (76.2mm)
- Voltage (350V)
- Tolerance (±20%)
- Capacitance (6800μF)
- Series
- E-CAP

CASE SIZE TABLE

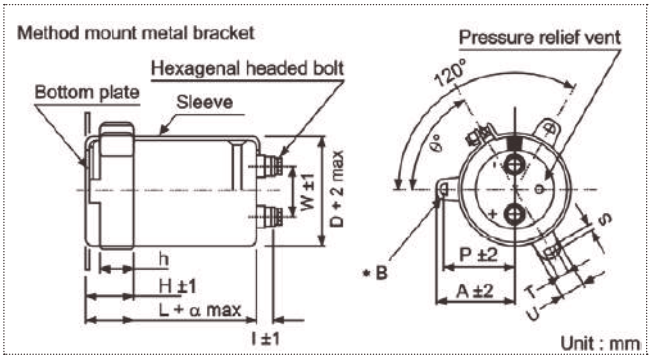

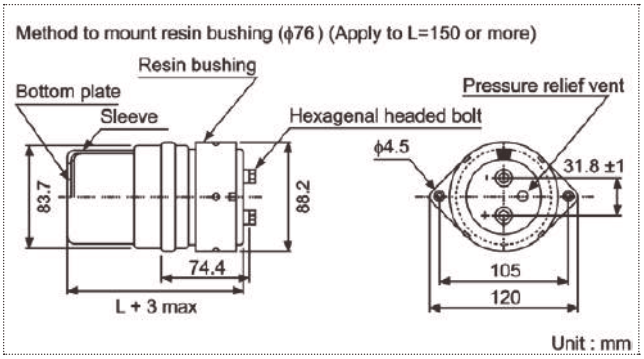

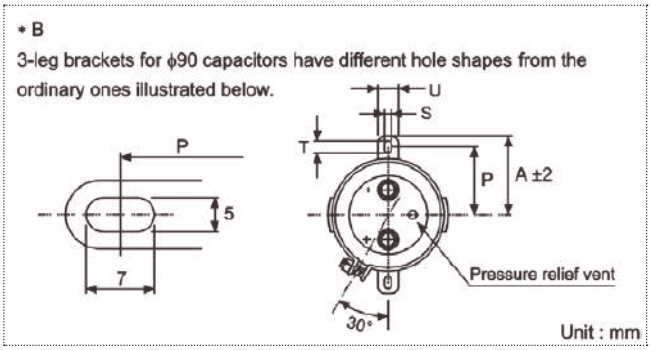

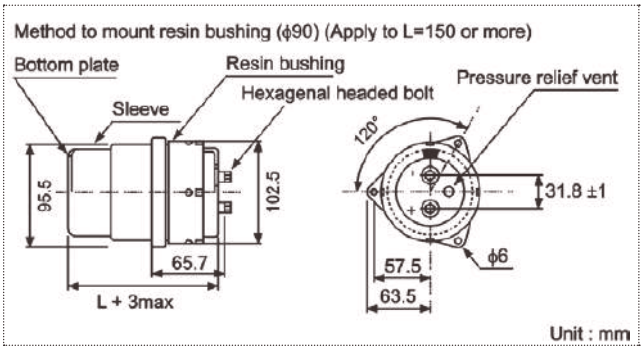

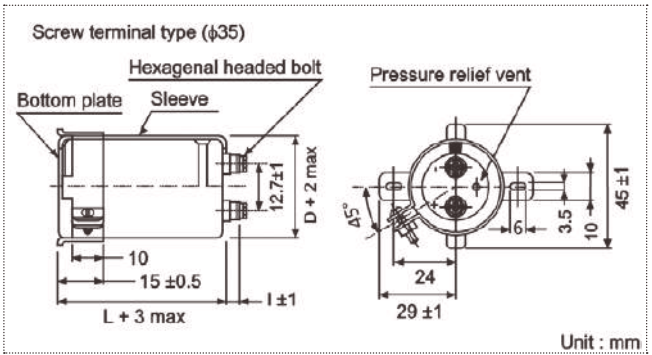

Dimension of terminal pitch (w) and Nominal dia. of bolt

ΦD	w	α	Nominal dia. of bolt
35	12.7	3	M5
51	22.0	3	M5
63.5	28.6	3	M5
76	31.8	3	M5
90	31.8	3	M5

Dimensions of mounting bracket

Voltage (Code)		3 - Leg				2 - Leg				
Symbol	ΦD	51	63.5	76	90	35	51	63.5	76	90
P		32.5	38.1	44.5	50.8	24	33.2	40.5	46.5	53
A		38.5	43	49.2	58.5	29	40	46.5	53	59
T		7.5	8.0	7.0	8.0	6.0	6.0	7.0	6.0	6.0
S		5.0	5.0	5.0	5.0	3.5	4.5	4.5	4.5	4.5
U		12	14	14	18	10	14	14	14	14
θ˚		60	60	60	60	30	30	30	30	30
H		20	25	30	35	15	25	35	35	35
h		15	20	24	25	10	15	20	20	20

STANDARD RATINGS

Voltage (Code)		10V (1A)			16V (1C)			25V (1E)		
SV		13			20			32		
Cap. (μF)	Code	Case Size	tan δ	Ripple Current	Case Size	tan δ	Ripple Current	Case Size	tan δ	Ripple Current
12000	129							35 x 80	0.35	3.3
15000	159				35 x 50	0.45	2.9	35 x 80	0.35	3.7
18000	189				35 x 80	0.45	3.5	35 x 80	0.35	4.0
22000	229				35 x 80	0.45	3.9	35 x 80	0.35	4.5
27000	279	35 x 80	0.45	4.3	35 x 80	0.45	4.3	35 x 100	0.40	5.0
33000	339	35 x 80	0.45	4.7	35 x 100	0.50	4.8	35 x 120	0.40	5.9
39000	399	35 x 80	0.45	5.3	35 x 100	0.50	5.3	51 x 80	0.40	6.5
47000	479	35 x 100	0.45	6.1	35 x 120	0.50	6.2	51 x 100	0.40	7.9
56000	569	35 x 100	0.50	6.2	51 x 80	0.60	6.3	51 x 120	0.40	8.8
68000	689	35 x 120	0.60	6.8	51 x 100	0.60	7.6	51 x 120	0.50	9.1
82000	829	51 x 80	0.60	7.8	51 x 120	0.70	8.3	63.5 x 100	0.50	10.6
100000	10T	51 x 100	0.70	8.5	51 x 120	0.70	9.2	63.5 x 120	0.60	11.4
120000	12T	51 x 100	0.70	9.5	63.5 x 100	0.80	9.9	76 x 100	0.60	12.8
150000	15T	63.5 x 100	0.80	11.0	76 x 100	0.80	12.3	76 x 120	0.75	13.7
180000	18T	63.5 x 100	0.80	12.1	76 x 120	0.80	14.5	76 x 140	0.76	16.1
220000	22T	76 x 100	1.00	13.2	76 x 140	1.00	15.2	90 x 140	1.00	16.6
270000	27T	76 x 120	1.20	14.4	90 x 140	1.20	16.8			
330000	33T	76 x 140	1.20	17.0						
390000	39T	90 x 140	1.40	18.6						

Maximum Allowable Ripple Current (Arms) at 105˚C 120Hz
tan δ at 20˚C 120Hz

Case Size ΦD x L (mm)

Voltage (Code)		35V (1V)			50V (1H)			63V (1J)		
SV		44			63			79		
Cap. (μF)	Code	Case Size	tan δ	Ripple Current	Case Size	tan δ	Ripple Current	Case Size	tan δ	Ripple Current
2700	278							35 x 50	0.19	1.9
3300	338							35 x 50	0.15	2.1
3900	398				35 x 50	0.20	2.0	35 x 80	0.20	2.7
4700	478				35 x 50	0.25	2.2	35 x 80	0.20	2.9
5600	568				35 x 80	0.25	2.8	35 x 80	0.20	3.2
6800	688				35 x 80	0.25	3.0	35 x 80	0.20	3.5
8200	828	35 x 80	0.30	3.0	35 x 80	0.25	3.3	35 x 100	0.25	4.2
10000	109	35 x 80	0.30	3.3	35 x 80	0.25	3.7	35 x 120	0.25	4.3
12000	129	35 x 80	0.30	3.6	35 x 100	0.25	4.4	51 x 80	0.25	4.8
15000	159	35 x 80	0.30	4.1	35 x 120	0.30	4.7	51 x 100	0.25	5.9
18000	189	35 x 100	0.30	4.8	51 x 80	0.35	4.8	51 x 120	0.30	6.3
22000	229	35 x 120	0.35	5.2	51 x 100	0.35	5.9	51 x 120	0.30	6.7
27000	279	51 x 80	0.40	5.9	51 x 120	0.35	7.0	63.5 x 120	0.30	8.8
33000	339	51 x 100	0.40	6.6	63.5 x 100	0.40	7.6	76 x 120	0.35	10.0
39000	399	51 x 120	0.40	7.8	63.5 x 120	0.40	8.9	76 x 140	0.35	12.5
47000	479	51 x 120	0.45	8.0	63.5 x 120	0.40	9.8	90 x 140	0.40	13.8
56000	569	63.5 x 100	0.45	9.2	76 x 120	0.40	11.9			
68000	689	63.5 x 120	0.45	11.0	76 x 140	0.45	13.1			
82000	829	76 x 120	0.50	12.7	90 x 140	0.50	14.8			
100000	10T	76 x 140	0.60	13.5						
120000	12T	90 x 140	0.60	16.1						

Maximum Allowable Ripple Current (Arms) at 105˚C 120Hz
tan δ at 20˚C 120Hz

Case Size ΦD x L (mm)

Specifications are subject to change without notice. Should a safety or technical concern arise regarding the product, please be sure to contact our sales offices or agents immediately.

SAMXON®
Aluminum Electrolytic Capacitors

+105˚C, Screw Terminal Type (螺釘型), Long Life Assurance (長壽命)

STANDARD RATINGS

Voltage (Code)		80V (1K)			100V (2A)			160V (2C)		
SV		100			125			200		
Cap. (μF)	Code	Case Size	tan δ	Ripple Current	Case Size	tan δ	Ripple Current	Case Size	tan δ	Ripple Current
680	687							35 x 50	0.15	1.1
820	827							35 x 80	0.15	1.2
1000	108							35 x 80	0.15	1.3
1200	128				35 x 50	0.15	1.4	35 x 80	0.15	1.5
1500	158				35 x 80	0.15	1.6	35 x 80	0.15	1.7
1800	188				35 x 80	0.15	1.8	35 x 100	0.15	2.0
2200	228	35 x 50	0.15	1.9	35 x 80	0.15	2.0	35 x 120	0.15	2.3
2700	278	35 x 80	0.15	2.2	35 x 80	0.15	2.4	35 x 120	0.15	2.7
3300	338	35 x 80	0.15	2.5	35 x 100	0.15	2.8	51 x 100	0.15	3.3
3900	398	35 x 80	0.15	2.9	35 x 120	0.15	3.1	51 x 120	0.15	3.8
4700	478	35 x 100	0.15	3.1	51 x 80	0.15	3.6	51 x 120	0.15	4.2
5600	568	35 x 100	0.15	3.6	51 x 100	0.15	4.3	51 x 120	0.15	4.7
6800	688	35 x 120	0.20	4.1	51 x 120	0.15	5.0	63.5 x 120	0.15	5.7
8200	828	51 x 80	0.20	4.8	51 x 120	0.15	5.5	76 x 100	0.20	6.4
10000	109	51 x 100	0.20	5.6	63.5 x 100	0.15	6.4	76 x 120	0.20	6.6
12000	129	51 x 100	0.20	6.1	63.5 x 120	0.20	6.6	76 x 140	0.20	7.8
15000	159	51 x 120	0.20	7.4	76 x 100	0.20	7.5	90 x 140	0.20	9.5
18000	189	63.5 x 120	0.25	8.0	76 x 120	0.25	8.0			
22000	229	76 x 100	0.25	9.1	76 x 140	0.25	9.4			
27000	279	76 x 120	0.30	9.7	90 x 140	0.30	10.4			
33000	339	76 x 140	0.30	11.5						
39000	399	90 x 140	0.30	12.5						

Maximum Allowable Ripple Current (Arms) at 105˚C 120Hz
tan δ at 20˚C 120Hz

Case Size ΦD x L (mm)

Voltage (Code)		200V (2G)			250V (2W)			350V (2H)		
SV		250			300			400		
Cap. (μF)	Code	Case Size	tan δ	Ripple Current	Case Size	tan δ	Ripple Current	Case Size	tan δ	Ripple Current
330	337				35 x 50	0.15	0.7			
390	397				35 x 80	0.15	0.8			
470	477	35 x 50	0.15	0.9	35 x 80	0.15	0.9			
560	567	35 x 80	0.15	1.0	35 x 80	0.15	1.0			
680	687	35 x 80	0.15	1.1	35 x 100	0.15	1.2			
820	827	35 x 80	0.15	1.3	35 x 100	0.15	1.4	51 x 80	0.25	3.3
1000	108	35 x 80	0.15	1.5	35 x 120	0.15	1.6			
1200	128	35 x 100	0.15	1.7	51 x 80	0.15	1.8			
1500	158	35 x 120	0.15	1.9	51 x 90	0.15	2.1	51 x 90	0.25	5.2
1800	188	35 x 120	0.15	2.2	51 x 100	0.15	2.4			
2200	228	51 x 80	0.15	2.7	51 x 110	0.15	2.7	51 x 110	0.25	7.0
2700	278	51 x 100	0.15	3.2	63.5 x 90	0.15	3.2	51 x 130	0.25	8.4
								63.5 x 90	0.25	8.1
3300	338	51 x 120	0.15	3.5	63.5 x 120	0.15	4.0	51 x 150	0.25	9.9
3900	398	63.5 x 100	0.15	4.0	76 x 90	0.15	4.2	63.5 x 130	0.25	11.5
								76 x 90	0.25	10.8
4700	478	63.5 x 120	0.15	4.7	76 x 120	0.15	5.2			
5600	568	76 x 100	0.15	5.3	76 x 140	0.15	6.1	63.5 x 150	0.25	14.7
6800	688	76 x 120	0.15	6.3	76 x 140	0.15	6.7	76 x 140	0.25	17.4
8200	828	76 x 140	0.20	6.4				76 x 150	0.25	19.6
10000	109	90 x 140	0.20	7.7				76 x 190	0.25	23.0
15000	159							90 x 190	0.25	30.6
22000	229							90 x 260	0.25	42.7

Maximum Allowable Ripple Current (Arms) at 105˚C 120Hz
tan δ at 20˚C 120Hz

Case Size ΦD x L (mm)

Specifications are subject to change without notice. Should a safety or technical concern arise regarding the product, please be sure to contact our sales offices or agents immediately.

STANDARD RATINGS

Voltage (Code)		400 (2G)			450V (2W)			500V (2H)		
SV		450			500			550		
Cap. (μF)	Code	Case Size	tan δ	Ripple Current	Case Size	tan δ	Ripple Current	Case Size	tan δ	Ripple Current
470	477							51 x 80	0.25	2.4
560	567				51 x 80	0.25	2.6			
680	687	51 x 80	0.25	3.0						
820	827							51 x 90	0.25	3.6
1000	108				51 x 90	0.25	4.0	51 x 110	0.25	4.4
1200	128	51 x 90	0.25	4.7	51 x 110	0.25	4.8	51 x 130	0.25	5.2
								63.5 x 90	0.25	5.0
1500	158							51 x 150	0.25	6.3
1800	188	51 x 110	0.25	6.3	51 x 130	0.25	6.4	63.5 x 110	0.25	6.8
					63.5 x 90	0.25	6.2			
2200	228	51 x 130	0.25	7.5	51 x 150	0.25	7.6			
		63.5 x 90	0.25	7.3	63.5 x 110	0.25	7.5			
2700	278	51 x 150	0.25	8.9	63.5 x 130	0.25	8.9	63.5 x 150	0.25	9.6
		63.5 x 110	0.25	8.8	76 x 110	0.25	9.1	76 x 110	0.25	9.2
3300	338	63.5 x 130	0.25	10.5	63.5 x 150	0.25	10.6			
		76 x 90	0.25	9.9	76 x 110	0.25	10.6			
3900	398				76 x 130	0.25	11.9	76 x 150	0.25	12.7
								90 x 130	0.25	11.9
4700	478	63.5 x 150	0.25	13.4	76 x 140	0.25	13.6			
		76 x 130	0.25	13.9						
5600	568				76 x 150	0.25	13.8			
6800	688	76 x 150	0.25	17.9	76 x 190	0.25	17.3	90 x 190	0.25	18.8
		90 x 130	0.25	17.2	90 x 150	0.25	16.7			
8200	828	76 x 190	0.25	20.8						
		90 x 150	0.25	20.1						
10000	109				90 x 200	0.25	23.3	90 x 260	0.25	26.3
12000	129	90 x 190	0.25	27.4						
15000	159				90 x 250	0.25	31.7			

Maximum Allowable Ripple Current (Arms) at 105˚C 120Hz
tan δ at 20˚C 120Hz

Case Size ΦD x L (mm)

Specifications are subject to change without notice. Should a safety or technical concern arise regarding the product, please be sure to contact our sales offices or agents immediately.

SAMXON®
Aluminum Electrolytic Capacitors

+85˚C, Screw Terminal Type (螺釘型), Longer Life Assurance (較長壽命)

FEATURES

- Load life of 10,000 hours application of ripple current at 85˚C.
- High ripple, high reliability.
- Best for use in industrial power supplies for inverter circuitry.

SPECIFICATIONS

Item	Performance Characteristics
Operating Temperature Range	-25 to +85˚C
Rated Working Voltage Range	350 to 500V
Nominal Capacitance Range	470 to 22000μF
Capacitance Tolerance	±20% at 120Hz, +20˚C
Leakage Current	I ≤0.02CV (μA) or 5 (mA) whichever is smaller measured after 5 minutes application of rated working voltage at +20˚C
tan δ (120Hz, +20˚C)	Working Voltage (V): 350~500 tan δ (max.): 0.2
Low Temperature Characteristics	Impedance ratio max. at 120Hz Working Voltage (V): 350~500 Z-25˚C / Z+20˚C: 8
High Temperature Loading	Test time : 10,000 hours Test temperature : +85˚C Test conditions : Rated DC working voltage with rated ripple current Post test requirements at +20˚C Leakage current : ≤Initial specified value Cap. change : within ±20% of the initial measured value tan δ : ≤300% of the initial specified value
Shelf Life	At +85˚C no voltage applied after 1,000 hours and then being stabilized at +20˚C the capacitors shall meet the following limits Leakage current : ≤Initial specified value Cap. change : within ±20% of the initial measured value tan δ : ≤300% of the initial specified value
Industrial Standard	JIS C - 5101-4 (IEC 60384-4)

RIPPLE CURRENT MULTIPLIER

Frequency Coefficient

Coefficient / Freq. (Hz) / Rated Voltage	50	120	300	1k	10k~
<160V	0.80	1.00	1.08	1.15	1.15
≥160V	0.80	1.00	1.08	1.15	1.20

PART NUMBER SYSTEM (EXAMPLE : 400V 3300μF)

1	2 3	4 5 6	7	8 9	10	11 12	13 14
E	WH	338	M	2G	U	90	OO

- Type (Terminal Code)
- Case Length (90mm)
- Diameter (76.2mm)
- Voltage (400V)
- Tolerance (±20%)
- Capacitance (3300μF)
- Series
- E-CAP

CASE SIZE TABLE

Method mount metal bracket

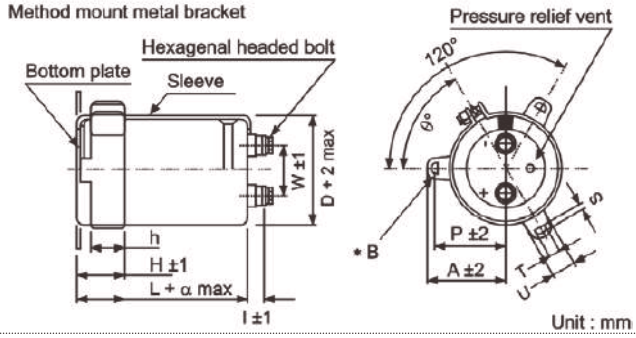

Unit : mm

Method to mount resin bushing (ϕ76) (Apply to L=150 or more)

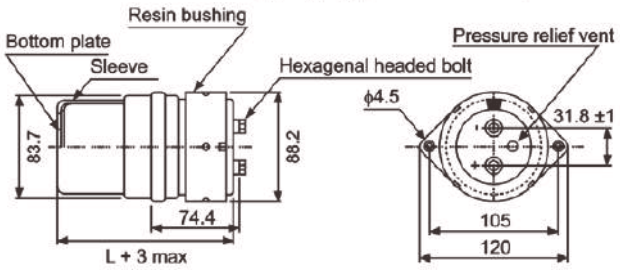

Unit : mm

* B

3-leg brackets for ϕ90 capacitors have different hole shapes from the ordinary ones illustrated below.

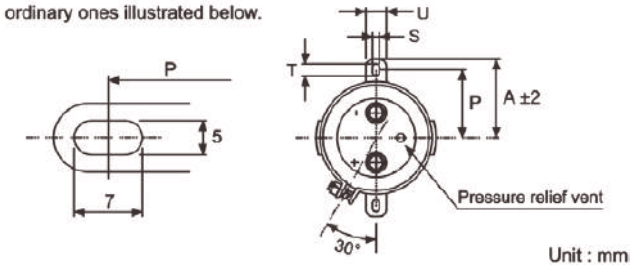

Unit : mm

Method to mount resin bushing (ϕ90) (Apply to L=150 or more)

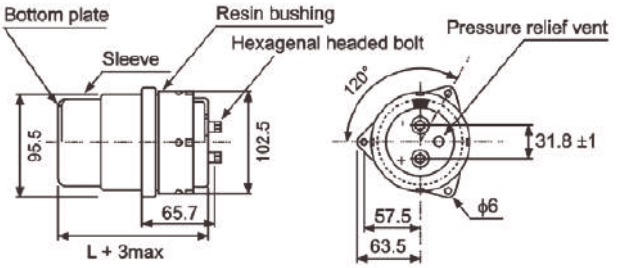

Unit : mm

Screw terminal type (ϕ35)

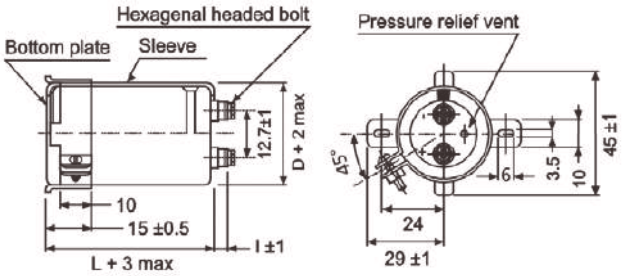

Unit : mm

Dimension of terminal pitch (w) and Nominal dia. of bolt

ΦD	w	α	Nominal dia. of bolt
35	12.7	3	M5
51	22.0	3	M5
63.5	28.6	3	M5
76	31.8	3	M5
90	31.8	3	M5

Dimensions of mounting bracket

Voltage (Code)		3 - Leg				2 - Leg			
Symbol	ΦD	51	63.5	76	90	51	63.5	76	90
P		32.5	38.1	44.5	50.8	33.2	40.5	46.5	53
A		38.5	43	49.2	58.5	40	46.5	53	59
T		7.5	8.0	7.0	8.0	6.0	7.0	6.0	6.0
S		5.0	5.0	5.0	5.0	4.5	4.5	4.5	4.5
U		12	14	14	18	14	14	14	14
θ ˚		60	60	60	60	30	30	30	30
H		20	25	30	35	25	35	35	35
h		15	20	24	25	15	20	20	20

SAMXON®
Aluminum Electrolytic Capacitors

+85˚C, Screw Terminal Type (螺釘型), Longer Life Assurance (較長壽命)

STANDARD RATINGS

Voltage (Code)		350V (2V)		400V (2G)		450V (2W)		500V (2H)	
SV		400		450		500		550	
Cap. (μF)	Code	Case Size	Ripple Current	Case Size	Ripple Current	Case Size	Ripple Current	Case Size	Ripple Current
470	477							51 x 80	2.4
560	567					51 x 80	2.6		
680	687			51 x 80	3.0				
820	827	51 x 80	3.3					51 x 90	3.6
1000	108					51 x 90	4.0	51 x 110	4.4
1200	128			51 x 90	4.7	51 x 110	4.8	51 x 130	5.2
								63.5 x 90	5.0
1500	158	51 x 90	5.2					51 x 150	6.3
1800	188			51 x 110	6.3	51 x 130	6.4	63.5 x 110	6.8
						63.5 x 90	6.2		
2200	228	51 x 110	7.0	51 x 130	7.5	51 x 150	7.6		
				63.5 x 90	7.3	63.5 x 110	7.5		
2700	278	51 x 130	8.4	51 x 150	8.9	63.5 x 130	8.9	63.5 x 150	9.6
		63.5 x 90	8.1	63.5 x 110	8.8	76 x 90	8.4	76 x 110	9.2
3300	338	51 x 150	9.9	63.5 x 130	10.5	63.5 x 150	10.6		
				76 x 90	9.9	76 x 110	10.2		
3900	398	63.5 x 130	11.5			76 x 130	11.9	76 x 150	12.7
		76 x 90	10.8					90 x 130	11.9
4700	478			63.5 x 150	13.4	76 x 115	12.4		
				76 x 130	13.9	76 x 150	14.0		
5600	568	63.5 x 150	14.7			90 x 130	14.2		
6800	688	76 x 130	16.8	76 x 150	17.9	76 x 190	17.3	90 x 190	18.8
				90 x 130	17.2	90 x 150	16.7		
8200	828	76 x 150	19.6	76 x 190	20.8				
				90 x 150	20.1				
10000	109	76 x 190	23.0			90 x 190	22.8	90 x 270	26.8
12000	129			90 x 190	27.4				
15000	159	90 x 190	30.6			90 x 270	32.8		
22000	229	90 x 270	43.5	90 x 270	39.4				

Maximum Allowable Ripple Current (Arms) at 85˚C 120Hz

Case Size ΦD x L (mm)

Specifications are subject to change without notice. Should a safety or technical concern arise regarding the product, please be sure to contact our sales offices or agents immediately.

FEATURES

- Load life of 20,000 hours application of ripple current at 85˚C.
- High ripple, high reliability.
- Best for use in industrial power supplies for inverter circuitry.

SPECIFICATIONS

Item	Performance Characteristics
Operating Temperature Range	-25 to +85˚C
Rated Working Voltage Range	350 to 450V
Nominal Capacitance Range	2200 to 12000μF
Capacitance Tolerance	±20% at 120Hz, +20˚C
Leakage Current	I ≤0.02CV (μA) or 5 (mA) whichever is smaller measured after 5 minutes application of rated working voltage at +20˚C
tan δ (120Hz, +20˚C)	Working Voltage (V): 350~450 tan δ (max.): 0.25
Low Temperature Characteristics	Impedance ratio max. at 120Hz Working Voltage (V): 350~450 Z-25˚C / Z+20˚C: 8
High Temperature Loading	Test time : 20,000 hours Test temperature : +85˚C Test conditions : Rated DC working voltage with rated ripple current Post test requirements at +20˚C Leakage current : ≤Initial specified value Cap. change : within ±30% of the initial measured value tan δ : ≤300% of the initial specified value
Shelf Life	At +85˚C no voltage applied after 1,000 hours and then being stabilized at +20˚C the capacitors shall meet the following limits Leakage current : ≤Initial specified value Cap. change : within ±20% of the initial measured value tan δ : ≤200% of the initial specified value
Industrial Standard	JIS C - 5101-4 (IEC 60384-4)

RIPPLE CURRENT MULTIPLIER

Frequency Coefficient

Coefficient / Freq. (Hz) / Rated Voltage	50	120	300	1k	10k~
＜160V	0.80	1.00	1.08	1.15	1.15
≥160V	0.80	1.00	1.08	1.15	1.20

PART NUMBER SYSTEM (EXAMPLE : 350V 4700μF)

1	2 3	4 5 6	7	8 9	10	11 12	13 14
E	WL	478	M	2V	U	1N	OO

- Type (Terminal Code)
- Case Length (120mm)
- Diameter (76.2mm)
- Voltage (350V)
- Tolerance (±20%)
- Capacitance (4700μF)
- Series
- E-CAP

CASE SIZE TABLE

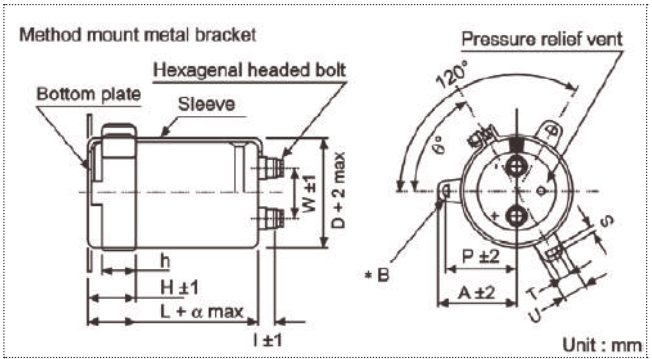

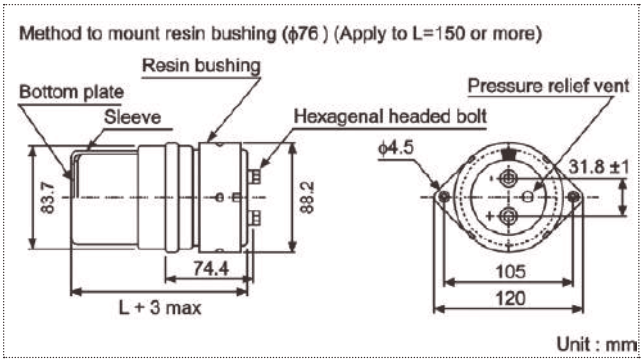

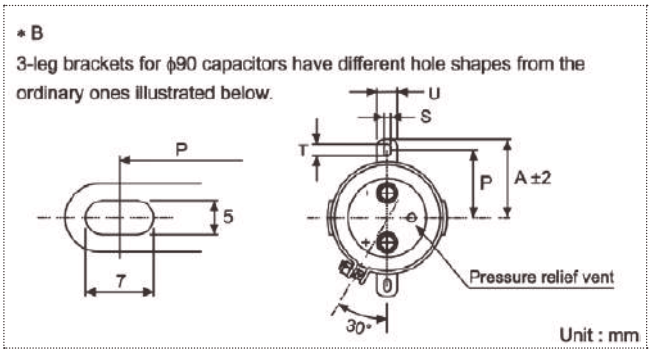

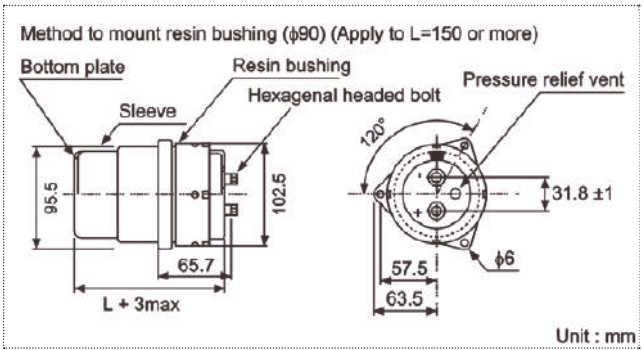

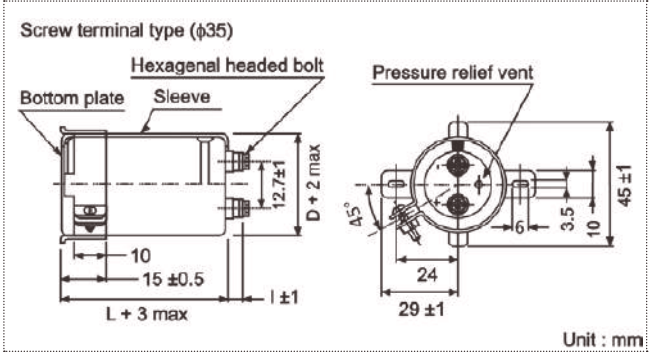

Dimension of terminal pitch (w) and Nominal dia. of bolt

ΦD	w	α	Nominal dia. of bolt
35	12.7	3	M5
51	22.0	3	M5
63.5	28.6	3	M5
76	31.8	3	M5
90	31.8	3	M5

Dimensions of mounting bracket

Voltage (Code)		3 - Leg			2 - Leg		
Symbol	ΦD	63.5	76	90	63.5	76	90
P		38.1	44.5	50.8	40.5	46.5	53
A		43	49.2	58.5	46.5	53	59
T		8.0	7.0	8.0	7.0	6.0	6.0
S		5.0	5.0	5.0	4.5	4.5	4.5
U		14	14	18	14	14	14
θ˚		60	60	60	30	30	30
H		25	30	35	35	35	35
h		20	24	25	20	20	20

STANDARD RATINGS

Voltage (Code)		350V (2V)		400V (2G)		450V (2W)	
SV		400		450		500	
Cap. (μF)	Code	Case Size	Ripple Current	Case Size	Ripple Current	Case Size	Ripple Current
2200	228					63.5 x 120	9.1
2700	278			63.5 x 120	10.1	63.5 x 130	10.6
						76 x 120	11.2
3300	338	63.5 x 120	11.1	63.5 x 130	11.7	63.5 x 160	12.7
						76 x 130	13.0
3900	398	63.5 x 130	12.8	63.5 x 160	13.8	63.5 x 170	14.4
				76 x 120	14.7		
4700	478	63.5 x 160	15.2	63.5 x 170	15.8	76 x 160	16.7
		76 x 120	14.7	76 x 130	15.5		
5600	568	63.5 x 170	17.3	63.5 x 190	18.2	76 x 190	20.1
		76 x 130	16.9	76 x 160	18.3	90 x 160	19.9
6800	688	63.5 x 190	20.0	76 x 170	21.0	90 x 170	23.0
		76 x 160	20.2				
8200	828	76 x 170	23.1	90 x 160	24.1	90 x 190	26.4
10000	109	90 x 160	26.6	90 x 190	29.1	90 x 190	29.1
12000	129	90 x 190	32.0				

Maximum Allowable Ripple Current (Arms) at 85˚C 120Hz

Case Size ΦD x L (mm)

Specifications are subject to change without notice. Should a safety or technical concern arise regarding the product, please be sure to contact our sales offices or agents immediately.

SAMXON®
Aluminum Electrolytic Capacitors

+125˚C, Screw Terminal Type (螺釘型), High Temperature (高温度)

FEATURES

- +125˚C, high temperature.
- High reliability equipment in automotive power electronics, e.g. integrated starter alternator.

SPECIFICATIONS

Item	Performance Characteristics
Operating Temperature Range	-25 to +125˚C
Rated Working Voltage Range	160 to 400V
Nominal Capacitance Range	330 to 15000μF
Capacitance Tolerance	±20% at 120Hz, +20˚C
Leakage Current	I ≤0.02CV (μA) or 5 (mA) whichever is smaller measured after 5 minutes application of rated working voltage at +20˚C
tan δ (120Hz, +20˚C)	The values shown in the STANDARD RATINGS tables
Low Temperature Characteristics	Impedance ratio max. at 120Hz Working Voltage (V): 160~400 Z-25˚C / Z+20˚C: 8
High Temperature Loading	Test time : 3,000 hours Test temperature : +125˚C Test conditions : Rated DC working voltage with rated ripple current Post test requirements at +20˚C Leakage current : ≤Initial specified value Cap. change : within ±30% of the initial measured value tan δ : ≤300% of the initial specified value
Shelf Life	At +125˚C no voltage applied after 1,000 hours and then being stabilized at +20˚C the capacitors shall meet the following limits Leakage current : ≤Initial specified value Cap. change : within ±20% of the initial measured value tan δ : ≤200% of the initial specified value
Industrial Standard	JIS C - 5101-4 (IEC 60384-4)

RIPPLE CURRENT MULTIPLIER

Frequency Coefficient

Coefficient / Freq. (Hz) / Rated Voltage	50	120	300	1k	10k~
<160V	0.80	1.00	1.08	1.15	1.15
≥160V	0.80	1.00	1.08	1.15	1.20

PART NUMBER SYSTEM (EXAMPLE : 200V 1000μF)

1	2 3	4 5 6	7	8 9	10	11 12	13 14
E	WB	108	M	2D	Q	80	OO

- Type (Terminal Code)
- Case Length (80mm)
- Diameter (35mm)
- Voltage (200V)
- Tolerance (±20%)
- Capacitance (1000μF)
- Series
- E-CAP

CASE SIZE TABLE

Method mount metal bracket

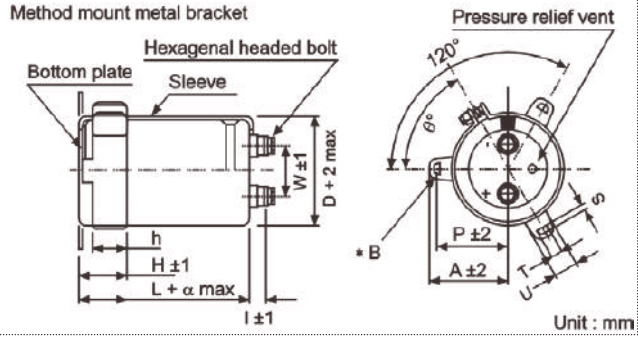

Unit : mm

Method to mount resin bushing (ϕ76) (Apply to L=150 or more)

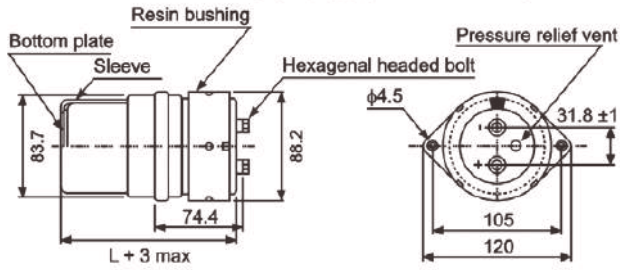

Unit : mm

* B

3-leg brackets for ϕ90 capacitors have different hole shapes from the ordinary ones illustrated below.

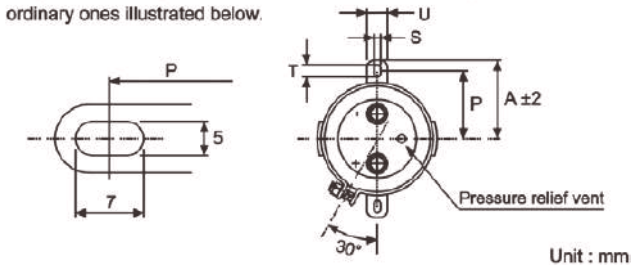

Unit : mm

Method to mount resin bushing (ϕ90) (Apply to L=150 or more)

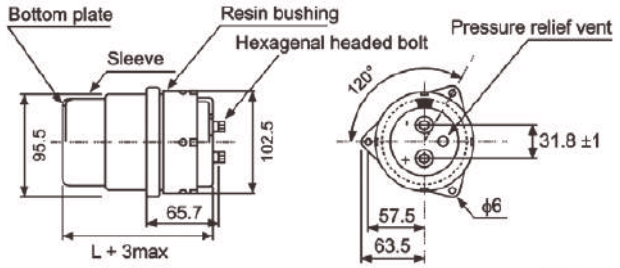

Unit : mm

Screw terminal type (ϕ35)

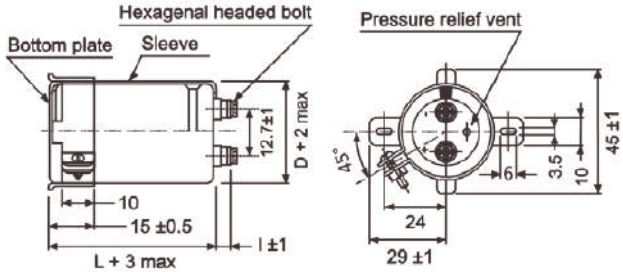

Unit : mm

Dimension of terminal pitch (w) and Nominal dia. of bolt

ΦD	w	α	Nominal dia. of bolt
35	12.7	3	M5
51	22.0	3	M5
63.5	28.6	3	M5
76	31.8	3	M5
90	31.8	3	M5

Dimensions of mounting bracket

Voltage (Code)		3 - Leg				2 - Leg				
Symbol	ΦD	51	63.5	76	90	35	51	63.5	76	90
P		32.5	38.1	44.5	50.8	24	33.2	40.5	46.5	53
A		38.5	43	49.2	58.5	29	40	46.5	53	59
T		7.5	8.0	7.0	8.0	6.0	6.0	7.0	6.0	6.0
S		5.0	5.0	5.0	5.0	3.5	4.5	4.5	4.5	4.5
U		12	14	14	18	10	14	14	14	14
θ ˚		60	60	60	60	30	30	30	30	30
H		20	25	30	35	15	25	35	35	35
h		15	20	24	25	10	15	20	20	20

SAMXON®
Aluminum Electrolytic Capacitors

+125˚C, Screw Terminal Type (螺釘型), High Temperature (高温度)

STANDARD RATINGS

Voltage (Code)		160V (2C)			200V (2D)			250V (2E)		
SV		200			250			300		
Cap. (μF)	Code	Case Size	tan δ	Ripple Current	Case Size	tan δ	Ripple Current	Case Size	tan δ	Ripple Current
330	337							35 x 50	0.15	0.7
390	397							35 x 80	0.15	0.8
470	477				35 x 50	0.15	0.9	35 x 80	0.15	0.9
560	567				35 x 80	0.15	1.0	35 x 80	0.15	1.0
680	687	35 x 50	0.15	1.1	35 x 80	0.15	1.1	35 x 100	0.15	1.2
820	827	35 x 80	0.15	1.2	35 x 80	0.15	1.3	35 x 100	0.15	1.4
1000	108	35 x 80	0.15	1.3	35 x 80	0.15	1.5	35 x 120	0.15	1.6
1200	128	35 x 80	0.15	1.5	35 x 100	0.15	1.7	51 x 80	0.15	1.8
1500	158	35 x 80	0.15	1.7	35 x 120	0.15	1.9	51 x 100	0.15	2.2
1800	188	35 x 100	0.15	2.0	35 x 120	0.15	2.2	51 x 120	0.15	2.6
2200	228	35 x 120	0.15	2.3	51 x 80	0.15	2.7	51 x 120	0.15	2.8
2700	278	35 x 120	0.15	2.7	51 x 100	0.15	3.2	63.5 x 100	0.15	3.3
3300	338	51 x 100	0.15	3.3	51 x 120	0.15	3.5	63.5 x 120	0.15	4.0
3900	398	51 x 120	0.15	3.8	63.5 x 100	0.15	4.0	76 x 100	0.15	4.4
4700	478	51 x 120	0.15	4.2	63.5 x 120	0.15	4.7	76 x 120	0.15	5.2
5600	568	51 x 120	0.15	4.7	76 x 100	0.15	5.3	76 x 140	0.15	6.1
6800	688	63.5 x 120	0.15	5.7	76 x 120	0.15	6.3	90 x 140	0.15	7.4
8200	828	76 x 100	0.20	6.4	76 x 140	0.20	6.4			
10000	109	76 x 120	0.20	6.6	90 x 140	0.20	7.7			
12000	129	76 x 140	0.20	7.8						
15000	159	90 x 140	0.20	9.5						

Maximum Allowable Ripple Current (Arms) at 125˚C 120Hz
tan δ at 20˚C 120Hz

Case Size ΦD x L (mm)

Voltage (Code)		350V (2V)			400V (2G)		
SV		400			450		
Cap. (μF)	Code	Case Size	tan δ	Ripple Current	Case Size	tan δ	Ripple Current
680	687				51 x 80	0.25	3.0
820	827	51 x 80	0.25	3.3			
1200	128				51 x 100	0.25	4.7
1500	158	51 x 100	0.25	5.2			
1800	188				63.5 x 90	0.25	6.3
2200	228	63.5 x 90	0.25	7.0	63.5 x 110	0.25	7.5
2700	278	63.5 x 110	0.25	8.4	63.5 x 120	0.25	8.8
3300	338	63.5 x 120	0.25	9.9	63.5 x 140	0.25	10.5
					76 x 110	0.25	9.9
3900	398	63.5 x 140	0.25	11.5			
		76 x 110	0.25	10.8			
4700	478				63.5 x 150	0.25	13.4
5600	568	76 x 150	0.25	14.7			
6800	688	76 x 170	0.25	16.8	76 x 190	0.25	17.9
					90 x 160	0.25	17.2
8200	828	76 x 190	0.25	19.6	90 x 190	0.25	20.1
10000	109	90 x 190	0.25	23.0			

Maximum Allowable Ripple Current (Arms) at 125˚C 120Hz
tan δ at 20˚C 120Hz

Case Size ΦD x L (mm)

Specifications are subject to change without notice. Should a safety or technical concern arise regarding the product, please be sure to contact our sales offices or agents immediately.

PACKAGING SPECIFICATIONS

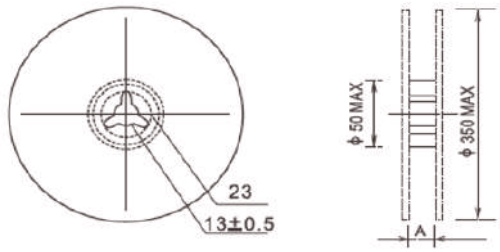

Specifications	Quantity
Φ4×5.4	2,000 pcs
Φ5 ~ 6.3×5.4 ~ 7.7	1,000 pcs
Φ8×6.2	1,000 pcs
Φ8 ~ 10×10.2	500 pcs
Φ12.5×13.5	200 pcs
Φ12.5×16	150 pcs
Φ16×16.5	125 pcs
Φ16×21.5	75 pcs

ΦD	4	5	6.3	8	10	12	16
A	14	14	18	26	26	34	46

TAPING DIMENSIONS

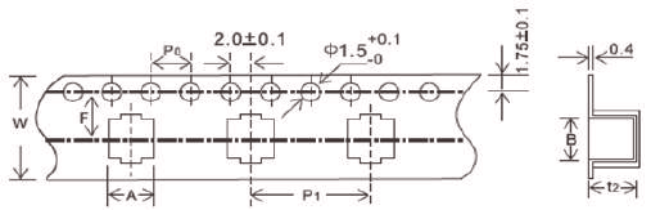

Specifications	W ±0.30	A	B	P_1 ±0.10	F ±0.10	t_2
Φ4×5.4	12.0	4.7	4.7	8.0	5.5	5.8
Φ5×5.4	12.0	6.0	6.0	12.0	5.5	5.8
Φ6.3×5.4	16.0	7.0	7.0	12.0	7.5	5.8
Φ6.3×7.7	16.0	7.0	7.0	12.0	7.5	8.3
Φ8×6.2	16.0	8.7	8.7	12.0	7.5	6.8
Φ8×10.2	24.0	8.7	8.7	16.0	11.5	11.0
Φ10×10.2	24.0	10.7	10.7	16.0	11.5	11.0
Φ12.5×13.5	32.0	13.4	13.4	24	14.2	14.4
Φ12.5×16	32.0	13.4	13.4	24	14.2	16.3
Φ16×16.5	44.0	17.5	17.5	28	20.2	17.4
Φ16×21.2	44.0	17.5	17.5	28	20.2	22.4

REFLOW SOLDERING FOR CHIP CAPACITORS

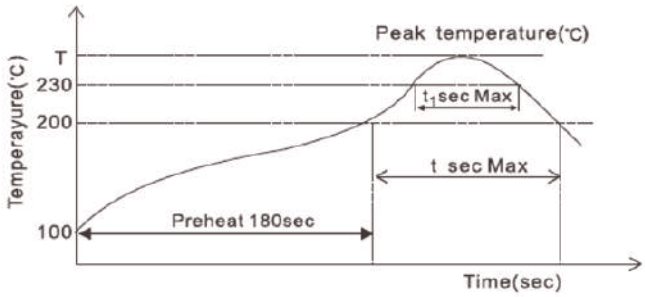

ALLOWABLE RANGE OF PEAK TEMPERATURE

Size	T (℃)	t (second)	t_1 (second)
Φ4 Φ6.3	255	100	50
Φ8	245	100	40
Φ10 Φ16	245	100	40

RECOMMENDED LAND SIZE

mm

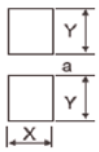

Size	X	Y	a
Φ4	1.6	2.6	1.0
Φ5	1.6	3.0	1.4
Φ6.3	1.6	3.5	2.1
Φ8	2.5	3.5	3.0
Φ10	2.5	4.0	4.5
Φ12.5	2.5	6.0	5.0
Φ16	3.0	6.5	8.0

- Preheat shall be done 100˚C-200˚C and for maximum 180 seconds.
- The temperature at capacitor top shall not exceed +255˚C.
- The duration for over +200˚C temperature at capacitor top shall not exceed 110 seconds.
- If capacitors are subject to the conditions other than the allowable range of reflow. Please contact us.

SAMXON®
Aluminum Electrolytic Capacitors

+85˚C, Surface Mount Type, General Purpose（贴片普通品）

FEATURES

- Reflow soldering is available
- Available for high density surface mounting
- High stability and reliability
- Life time: 85˚C, 2,000Hrs

SPECIFICATIONS

Item	Performance Characteristics
Operating Temperature Range	–40 to +85˚C
Rated Working Voltage Range	6.3 to 50V
Nominal Capacitance Range	0.1 to 1500μF
Capacitance Tolerance	±20% at 120Hz, +20˚C
Leakage Current	I ≤0.01CV or 3(μA) whichever is greater measure after 2 minutes application of rated working voltage at +20˚C

tanδ (120Hz, +20˚C)

Working Voltage (V)	6.3	10	16	25	35	50
tanδ (max.) Φ4~6.3	0.26	0.22	0.18	0.16	0.13	0.12
Φ8~10	0.35	0.26	0.20	0.16	0.14	0.12

Low Temperature Characteristics

Impedance ratio max. at 120Hz

Working Voltage (V)	6.3	10	16	25	35	50
Z-40˚C / Z+20˚C	8	8	4	4	3	3

High Temperature Loading

Test time : 2,000 hours
Test temperature : +85˚C
Test conditions : Rated DC working voltage

Post test requirements at +20˚C
Leakage current : ≤Initial specified value
Cap. change : within ±20% of the initial measured value
tanδ : ≤200% of the initial specified value

Shelf Life

At +85˚C no voltage applied after 1,000 hours and then being stabilized at +20˚C the capacitors shall meet the following limits
Leakage current : ≤200% of initial specified value
Cap. change : within ±20% of the initial measured value
tanδ : ≤200% of the initial specified value

Industrial Standard	JIS C – 5101-4 (IEC 60384-4)

DIMENSIONS & MARKING

(Φ4～Φ6.3)

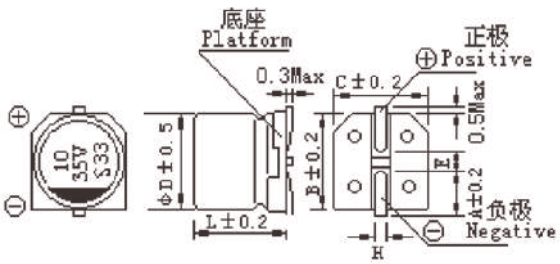

Size	Φ4 x 5.4	Φ5 x 5.4	Φ6.3 x 5.4	Φ6.3 x 7.7	Φ8 x 10.2	Φ10 x 10.2
A	1.8	2.1	2.4	2.5	2.9	3.2
B	4.3	5.3	6.6	6.6	8.3	10.3
C	4.3	5.3	6.6	6.6	8.3	10.3
E	1.0	1.3	2.2	2.2	3.1	4.5
L	5.4	5.4	5.4	7.7	10.2	10.2
H	0.5 ~ 0.9				0.9 ~ 1.1	

(Φ6.3×7.7)

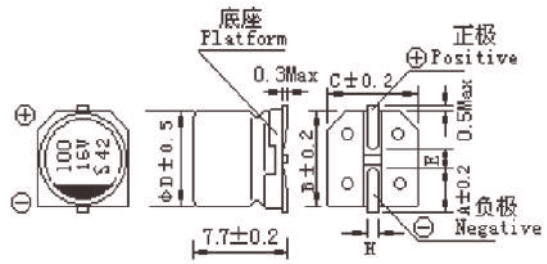

(Φ8～Φ10×10.2)

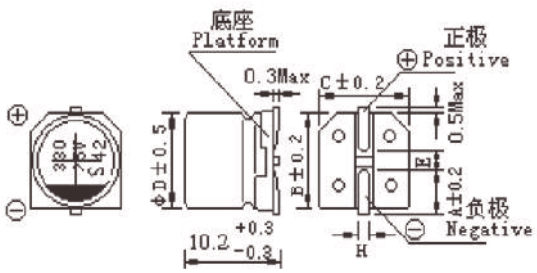

PART NUMBER SYSTEM (EXAMPLE: 16V 470μF)

1	2 3	4 5 6	7	8 9	10	11 12	13 14
V	S1	477	M	1C	F	T2	TR

- Type (Taping)
- Case Length (10.2mm)
- Diameter (8mm)
- Voltage (16V)
- Tolerance (±20%)
- Capacitance (470μF)
- Series
- V-CHIP

STANDARD RATINGS

Voltage (Code)		6.3V (0J)		10V (1A)		16V (1C)		25V (1E)	
Cap. (μF)	Code	Case Size	Ripple Current	Case Size	Ripple Current	Case Size	Ripple Current	Case Size	Ripple Current
4.7	475							4 x 5.4	16
10	106					4 x 5.4	23	4 x 5.4	24
22	226	4 x 5.4	28	4 x 5.4	30	5 x 5.4	37	5 x 5.4	38
33	336	5 x 5.4	37	5 x 5.4	41	5 x 5.4	44	6.3 x 5.4	52
47	476	5 x 5.4	45	6.3 x 5.4	52	5 x 5.4	48	6.3 x 5.4	60
						6.3 x 5.4	58		
100	107	5 x 5.4	50	6.3 x 5.4	76	6.3 x 5.4	86	6.3 x 7.7	130
		6.3 x 5.4	70						
220	227	6.3 x 5.4	95	6.3 x 7.7	150	6.3 x 7.7	150	8 x 10.2	232
330	337	6.3 x 7.7	150	8 x 10.2	240	8 x 10.2	270	10 x 10.2	305
470	477	8 x 10.2	265	8 x 10.2	290	8 x 10.2	280	10 x 10.2	393
						10 x 10.2	330		
1000	108	10 x 10.2	400	10 x 10.2	454				
1500	158	10 x 10.2	489						

Maximum Allowable Ripple Current (mA rms) at 85°C 120Hz

Case Size ΦD x L (mm)

Voltage (Code)		35V (1V)		50V (1H)	
Cap. (μF)	Code	Case Size	Ripple Current	Case Size	Ripple Current
0.1	104			4 x 5.4	1.0
0.22	224			4 x 5.4	2.0
0.33	334			4 x 5.4	2.8
0.47	474			4 x 5.4	4.0
1	105			4 x 5.4	8.4
2.2	225			4 x 5.4	13
3.3	335	4 x 5.4	18	4 x 5.4	17
4.7	475	4 x 5.4	20	5 x 5.4	20
10	106	5 x 5.4	29	6.3 x 5.4	33
22	226	6.3 x 5.4	46	6.3 x 5.4	43
33	336	6.3 x 5.4	53	6.3 x 7.7	85
47	476	6.3 x 5.4	55	6.3 x 7.7	90
		6.3 x 7.7	70	8 x 10.2	140
100	107	6.3 x 7.7	80	8 x 10.2	145
		8 x 10.2	175	10 x 10.2	195
220	227	8 x 10.2	185	10 x 10.2	415
		10 x 10.2	265		
330	337	10 x 10.2	324		
470	477	10 x 10.2	395		

Maximum Allowable Ripple Current (mA rms) at 85°C 120Hz

Case Size ΦD x L (mm)

Specifications are subject to change without notice. Should a safety or technical concern arise regarding the product, please be sure to contact our sales offices or agents immediately.

SAMXON®
Aluminum Electrolytic Capacitors

+105˚C, Surface Mount Type, General Purpose, 1,000 Hours（貼片普通品）

FEATURES

- Operating over wide temperature range
- Reflow soldering is available
- Available for high density surface mounting
- High stability and reliability

SPECIFICATIONS

Item	Performance Characteristics
Operating Temperature Range	–55 to +105˚C
Rated Working Voltage Range	6.3 to 50V
Nominal Capacitance Range	0.1 to 220μF
Capacitance Tolerance	±20% at 120Hz, +20˚C
Leakage Current	I ≤0.01CV or 3(μA) whichever is greater measure after 2 minutes application of rated working voltage at +20˚C
tan δ (120Hz, +20˚C)	Working Voltage (V): 6.3, 10, 16, 25, 35, 50 tanδ: 0.26, 0.20, 0.16, 0.14, 0.12, 0.12
Low Temperature Characteristics	Impedance ratio max. at 120Hz Working Voltage (V): 6.3, 10, 16, 25, 35, 50 Z-25˚C / Z+20˚C: 4, 3, 2, 2, 2, 2 Z-40˚C / Z+20˚C: 8, 6, 4, 4, 3, 3
High Temperature Loading	Test time : 1,000 hours Test temperature : +105˚C Test conditions : Rated DC working voltage Post test requirements at +20˚C Leakage current : ≤Initial specified value Cap. change : within ±20% of the initial measured value tan δ : ≤200% of the initial specified value
Shelf Life	At +105˚C no voltage applied after 1,000 hours and then being stabilized at +20˚C the capacitors shall meet the following limits Leakage current : ≤200% of the initial specified value Cap. change : within ±20% of the initial measured value tanδ : ≤200% of the initial specified value
Industrial Standard	JIS C – 5101-4 (IEC 60384-4)

DIMENSIONS & MARKING

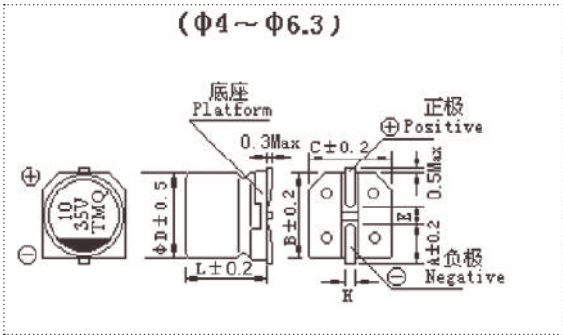

Size	Φ4 x 5.4	Φ5 x 5.4	Φ6.3 x 5.4
A	1.8	2.1	2.4
B	4.3	5.3	6.6
C	4.3	5.3	6.6
E	1.0	1.3	2.2
L	5.4	5.4	5.4
H	0.5 ~ 0.9		

PART NUMBER SYSTEM (EXAMPLE: 16V 100μF)

1	2 3	4 5 6	7	8 9	10	11 12	13 14
V	T1	107	M	1C	E	54	TR

- Type (Taping)
- Case Length (5.4mm)
- Diameter (6.3mm)
- Voltage (16V)
- Tolerance (±20%)
- Capacitance (100μF)
- Series
- V-CHIP

STANDARD RATINGS

Voltage (Code)		6.3V (0J)		10V (1A)		16V (1C)		25V (1E)	
Cap. (μF)	Code	Case Size	Ripple Current	Case Size	Ripple Current	Case Size	Ripple Current	Case Size	Ripple Current
4.7	475					4 x 5.4	12	4 x 5.4	13
10	106					4 x 5.4	20	4 x 5.4	14
								5 x 5.4	20
22	226	4 x 5.4	20	4 x 5.4	21	4 x 5.4	22	5 x 5.4	25
				5 x 5.4	27	5 x 5.4	31	6.3 x 5.4	36
33	336	4 x 5.4	22	4 x 5.4	23	5 x 5.4	28	5 x 5.4	29
		5 x 5.4	27	5 x 5.4	34	6.3 x 5.4	40	6.3 x 5.4	44
47	476	4 x 5.4	25	5 x 5.4	30	5 x 5.4	31	6.3 x 5.4	48
		5 x 5.4	37	6.3 x 5.4	41	6.3 x 5.4	56		
100	107	5 x 5.4	39	6.3 x 5.4	53	6.3 x 5.4	75		
		6.3 x 5.4	57						
220	227	6.3 x 5.4	67						

Maximum Allowable Ripple Current (mA rms) at 105˚C 120Hz

Case Size ΦD x L (mm)

Voltage (Code)		35V (1V)		50V (1H)	
Cap. (μF)	Code	Case Size	Ripple Current	Case Size	Ripple Current
0.1	104			4 x 5.4	1.0
0.22	224			4 x 5.4	2.0
0.33	334			4 x 5.4	3.0
0.47	474			4 x 5.4	4.0
1	105			4 x 5.4	8.0
2.2	225			4 x 5.4	11
3.3	335			4 x 5.4	13
4.7	475	4 x 5.4	14	5 x 5.4	18
10	106	5 x 5.4	24	6.3 x 5.4	28
22	226	5 x 5.4	27	6.3 x 5.4	42
		6.3 x 5.4	40		
33	336	6.3 x 5.4	50		

Maximum Allowable Ripple Current (mArms) at 105˚C 120Hz

Case Size ΦD x L (mm)

Specifications are subject to change without notice. Should a safety or technical concern arise regarding the product, please be sure to contact our sales offices or agents immediately.

SAMXON®
Aluminum Electrolytic Capacitors

+105˚C, Surface Mount Type, General Purpose, 2,000 Hours（贴片普通品）

FEATURES

- Life time: 105˚C, 2,000Hrs
- Reflow soldering is available
- Available for high density surface mounting
- High stability and reliability

SPECIFICATIONS

Item	Performance Characteristics
Operating Temperature Range	–55 to +105˚C
Rated Working Voltage Range	6.3 to 100V
Nominal Capacitance Range	4.7 to 1500μF
Capacitance Tolerance	±20% at 120Hz, +20˚C
Leakage Current	I ≤0.01CV or 3(μA) whichever is greater measure after 2 minutes application of rated working voltage at +20˚C

tanδ (120Hz, +20˚C)

Working Voltage (V)	6.3	10	16	25	35	50	63	100
tanδ (max.)	0.26	0.20	0.16	0.14	0.12	0.12	0.12	0.12

Low Temperature Characteristics

Impedance ratio max. at 120Hz

Working Voltage (V)	6.3	10	16	25	35	50	63	100
Z-25˚C / Z+20˚C	4	3	2	2	2	2	3	3
Z-40˚C / Z+20˚C	8	6	4	4	3	3	4	4

High Temperature Loading

Test time : 2,000 hours
Test temperature : +105˚C
Test conditions : Rated DC working voltage

Post test requirements at +20˚C
Leakage current : ≤Initial specified value
Cap. change : within ±20% of the initial measured value (≤16V:within ±25%)
tanδ : ≤200% of the initial specified value

Shelf Life

At +105˚C no voltage applied after 1,000 hours and then being stabilized at +20˚C the capacitors shall meet the following limits
Leakage current : ≤Initial specified value
Cap. change : within ±20% of the initial measured value
tanδ : ≤200% of the initial specified value

Industrial Standard	JIS C – 5101-4 (IEC 60384-4)

DIMENSIONS & MARKING

(Φ6.3 X 7.7)

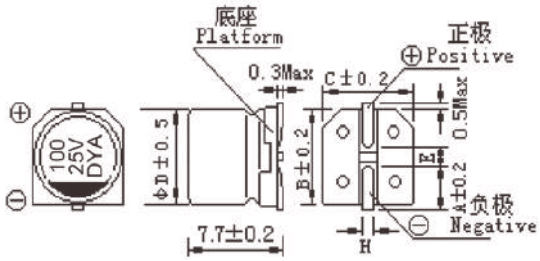

(Φ8 X 6.2 ~ Φ8 ~ Φ10 X 10.2)

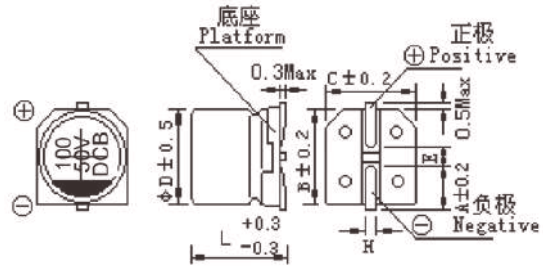

Size	Φ6.3 x 7.7	Φ8 x 6.2	Φ8 x 10.2	Φ10 x 10.2
A	2.5	2.9	2.9	3.2
B	6.6	8.3	8.3	10.3
C	6.6	8.3	8.3	10.3
E	2.2	3.1	3.1	4.5
L	7.7	6.2	10.2	10.2
H	0.5 ~ 0.9	0.8 ~ 1.1		

PART NUMBER SYSTEM (EXAMPLE: 25V 470μF)

1	2 3	4 5 6	7	8 9	10	11 12	13 14
V	TD	477	M	1E	G	T2	TR

- Type (Taping)
- Case Length (10.2mm)
- Diameter (10mm)
- Voltage (25V)
- Tolerance (±20%)
- Capacitance (470μF)
- Series
- V-CHIP

STANDARD RATINGS

Voltage (Code)		6.3V (0J)		10V (1A)		16V (1C)		25V (1E)	
Cap. (μF)	Code	Case Size	Ripple Current	Case Size	Ripple Current	Case Size	Ripple Current	Case Size	Ripple Current
100	107							6.3 x 7.7	91
								8 x 6.2	105
220	227	6.3 x 7.7	105	6.3 x 7.7	110	6.3 x 7.7	105	8 x 10.2	175
		8 x 6.2	115	8 x 6.2	120	8 x 6.2	125		
330	337	6.3 x 7.7	110	8 x 10.2	196	8 x 10.2	195	10 x 10.2	240
		8 x 6.2	120					8 x 10.2	220
470	477	8 x 10.2	210	8 x 10.2	210	10 x 10.2	295	10 x 10.2	280
						8 x 10.2	230		
1000	108	10 x 10.2	300	10 x 10.2	315	10 x 10.2	340		
		8 x 10.2	230						
1500	158	10 x 10.2	315	10 x 12	350				

Maximum Allowable Ripple Current (mA rms) at 105˚C 120Hz

Case Size ΦD x L (mm)

Voltage (Code)		35V (1V)		50V (1H)		63V (1J)		100V (2A)	
Cap. (μF)	Code	Case Size	Ripple Current	Case Size	Ripple Current	Case Size	Ripple Current	Case Size	Ripple Current
4.7	475							6.3 x 7.7	35
								8 x 6.2	40
10	106					6.3 x 7.7	39	8 x 10.2	77
						8 x 6.2	45	6.3 x 7.7	35
22	226			6.3 x 7.7	51	6.3 x 7.7	48	10 x 10.2	126
				8 x 6.2	54			8 x 10.2	84
33	336	8 x 6.2	50	6.3 x 7.7	60	8 x 10.2	98	10 x 10.2	133
						6.3 x 7.7	49		
47	476	6.3 x 7.7	70	8 x 10.2	120	10 x 10.2	160	10 x 10.2	140
		8 x 6.2	78	6.3 x 7.7	75	8 x 10.2	119		
100	107	8 x 10.2	120	10 x 10.2	170	10 x 10.2	196		
		6.3 x 7.7	84	8 x 10.2	140				
220	227	10 x 10.2	220	10 x 10.2	220				
		8 x 10.2	190						
330	337	10 x 10.2	245						
470	477	10 x 12	280						

Maximum Allowable Ripple Current (mA rms) at 105˚C 120Hz

Case Size ΦD x L (mm)

Specifications are subject to change without notice. Should a safety or technical concern arise regarding the product, please be sure to contact our sales offices or agents immediately.

SAMXON®
Aluminum Electrolytic Capacitors

+105˚C, Surface Mount Type, High Voltage, 3,000 Hours（高壓貼片品）

FEATURES

- Life time: 105˚C, 3,000Hrs
- Small size, large capacity
- High stability and reliability with high ripple current

SPECIFICATIONS

Item	Performance Characteristics
Operating Temperature Range	–25 to +105˚C
Rated Working Voltage Range	400V.DC
Nominal Capacitance Range	2.2 ~ 4.7μF
Capacitance Tolerance	±20% at 120Hz, +20˚C
Leakage Current	I ≤0.04CV+100(μA) after 1 minute application of rated working voltage at +20˚C
tanδ (120Hz, +20˚C)	Working Voltage (V): 400 tanδ: 0.22
Low Temperature Characteristics	Impedance ratio max. at 120Hz Working Voltage (V): 400 Z-25˚C / Z+20˚C: 6
High Temperature Loading	Test time : 3,000 hours Test temperature : +105˚C Test conditions : Rated DC working voltage Post test requirements at +20˚C Leakage current : ≤Initial specified value Cap. change : within ±20% of the initial measured value tan δ : ≤200% of the initial specified value
Shelf Life	At +105˚C no voltage applied after 1,000 hours and then being stabilized at +20˚C the capacitors shall meet the following limits Leakage current : ≤200% of initial specified value Cap. change : within ±20% of the initial measured value tanδ : ≤200% of the initial specified value
Industrial Standard	JIS C – 5101-4 (IEC 60384-4)

DIMENSIONS & MARKING

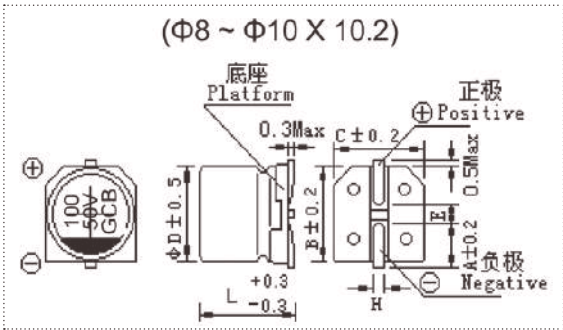

Size	Φ8 x 10.2	Φ10 x 10.2
A	2.9	3.2
B	8.3	10.3
C	8.3	10.3
E	3.1	4.5
L	10.2	10.2
H	0.8 ~ 1.1	

PART NUMBER SYSTEM (EXAMPLE: 400V 2.2μF)

1	2 3	4 5 6	7	8 9	10	11 12	13 14
V	TG	225	M	2G	F	T2	TR

- Type (Taping)
- Case Length (10.2mm)
- Diameter (8mm)
- Voltage (400V)
- Tolerance (±20%)
- Capacitance (2.2μF)
- Series
- V-CHIP

STANDARD RATINGS

Voltage (Code)		400V (2G)	
Cap. (μF)	Code	Case Size	Ripple Current
2.2	225	8 x 10.2	26
3.3	335	10 x 10.2	37
4.7	475	10 x 10.2	39

Maximum Allowable Ripple Current (mA rms) at 105˚C 120Hz

Case Size ΦD x L (mm)

Specifications are subject to change without notice. Should a safety or technical concern arise regarding the product, please be sure to contact our sales offices or agents immediately.

SAMXON®
Aluminum Electrolytic Capacitors

+105˚C, Surface Mount Type, Low Impedance（低阻抗贴片品）

FEATURES

- Life time: 105˚C, 2,000Hrs
- Reflow soldering is available
- Available for high density surface mounting
- High stability and reliability
- Low impedance

SPECIFICATIONS

Item	Performance Characteristics
Operating Temperature Range	–55 to +105˚C
Rated Working Voltage Range	6.3 to 100V
Nominal Capacitance Range	1 to 1500μF
Capacitance Tolerance	±20% at 120Hz, +20˚C
Leakage Current	I ≤0.01CV or 3(μA) whichever is greater measure after 2 minutes application of rated working voltage at +20˚C
tanδ (120Hz, +20˚C)	Working Voltage (V): 6.3, 10, 16, 25, 35, 50, 63, 80, 100 tanδ (max.): 0.22, 0.19, 0.16, 0.14, 0.12, 0.10, 0.08, 0.08, 0.08
Low Temperature Characteristics	Impedance ratio max. at 120Hz Working Voltage (V): 6.3, 10, 16, 25, 35, 50, 63, 80, 100 Z-25˚C / Z+20˚C: 2, 2, 2, 2, 2, 2, 2, 2, 2 Z-40˚C / Z+20˚C: 3, 3, 3, 3, 3, 3, 3, 3, 3 Z-55˚C / Z+20˚C: 4, 4, 4, 3, 3, 3, 3, 3, 3
High Temperature Loading	Test time : 2,000 hours Test temperature : +105˚C Test conditions : Rated DC working voltage Post test requirements at +20˚C Leakage current : ≤Initial specified value Cap. change : within ±20% of the initial measured value (≤16V:within ±25%) tanδ : ≤200% of the initial specified value
Shelf Life	At +105˚C no voltage applied after 1,000 hours and then being stabilized at +20˚C the capacitors shall meet the following limits Leakage current : ≤200% of initial specified value Cap. change : within ±20% of the initial measured value tanδ : ≤120% of the initial specified value
Industrial Standard	JIS C – 5101-4 (IEC 60384-4)

DIMENSIONS & MARKING

(Φ4～Φ6.3)

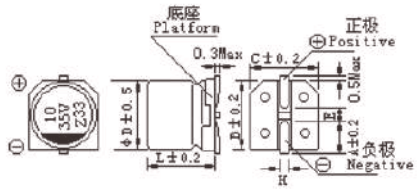

(Φ6.3 X 7.7 / Φ8 ~ Φ10 X 10.2)

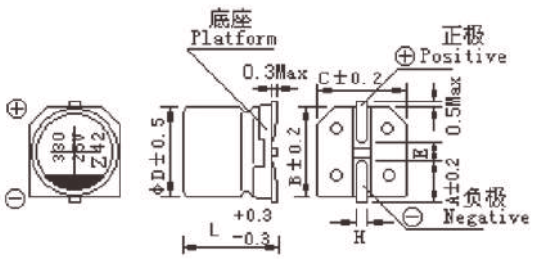

Size	Φ4 x 5.4	Φ5 x 5.4	Φ6.3 x 5.4	Φ6.3 x 7.7	Φ8 x 6.2	Φ8 x 10.2	Φ10 x 10.2
A	1.8	2.2	2.6	2.6	2.9	2.9	3.3
B	4.3	5.3	6.6	6.6	8.3	8.3	10.3
C	4.3	5.3	6.6	6.6	8.3	8.3	10.3
L	5.4	5.4	5.4	7.7	6.2	10.2	10.2
H	0.5 ~ 0.9				0.9 ~ 1.1		

PART NUMBER SYSTEM (EXAMPLE: 25V 470μF)

1	2 3	4 5 6	7	8 9	10	11 12	13 14
V	Z2	477	M	1E	G	T2	TR

- Type (Taping)
- Case Length (10.2mm)
- Diameter (10mm)
- Voltage (25V)
- Tolerance (±20%)
- Capacitance (470μF)
- Series
- V-CHIP

STANDARD RATINGS

Voltage (Code)		6.3V (0J)			10V (1A)			16V (1C)			25V (1E)			35V (1V)		
Cap. (μF)	Code	Case Size	Impedance	Ripple Current	Case Size	Impedance	Ripple Current	Case Size	Impedance	Ripple Current	Case Size	Impedance	Ripple Current	Case Size	Impedance	Ripple Current
4.7	475										4 x 5.4	2.2	80	4 x 5.4	2.2	80
10	106							4 x 5.4	2.2	80	4 x 5.4	2.2	80	5 x 5.4	1.2	150
22	226	4 x 5.4	2.2	80	4 x 5.4	2.2	80	5 x 5.4	1.2	150	6.3 x 5.4	0.58	230	6.3 x 5.4	0.58	230
33	336	5 x 5.4	1.2	150	5 x 5.4	1.2	150	6.3 x 5.4	0.58	230	6.3 x 5.4	0.58	230	6.3 x 5.4	0.58	230
47	476	5 x 5.4	1.2	150	6.3 x 5.4	0.58	230	6.3 x 5.4	0.58	230	6.3 x 7.7	0.34	280	6.3 x 7.7	0.34	280
100	107	6.3 x 5.4	0.58	230	6.3 x 7.7	0.34	280	6.3 x 5.4	0.52	230	6.3 x 7.7	0.34	280	8 x 10.2	0.17	450
								6.3 x 7.7	0.34	280	8 x 6.2	0.26	300			
150	157	6.3 x 5.4	0.58	230	6.3 x 7.7	0.34	280	6.3 x 7.7	0.34	280	8 x 10.2	0.17	450	10 x 10.2	0.1	670
220	227	6.3 x 5.4	0.58	243	6.3 x 7.7	0.34	280	6.3 x 7.7	0.34	384	8 x 10.2	0.17	450	8 x 10.2	0.17	587
		6.3 x 7.7	0.34	280				8 x 10.2	0.17	450				10 x 10.2	0.1	670
330	337	6.3 x 7.7	0.34	280	8 x 10.2	0.17	450	8 x 10.2	0.17	450	10 x 10.2	0.1	670	10 x 10.2	0.1	670
470	477	8 x 10.2	0.17	450	8 x 10.2	0.17	450	8 x 10.2	0.17	450	10 x 10.2	0.1	670			
								10 x 10.2	0.1	670						
1000	108	8 x 10.2	0.17	450	10 x 10.2	0.1	670	10 x 10.2	0.1	670						
		10 x 10.2	0.1	670												
1500	158	10 x 10.2	0.1	670												

Maximum Allowable Ripple Current (mA rms) at 105˚C 100kHz
Maximum ESR (Ω) at 20˚C 100kHz

Case Size ΦD x L (mm)

Voltage (Code)		50V (1H)			63V (1J)			80V(1K)			100V (2A)		
Cap. (μF)	Code	Case Size	Impedance	Ripple Current	Case Size	Impedance	Ripple Current	Case Size	Impedance	Ripple Current	Case Size	Impedance	Ripple Current
1	105	4 x 5.4	4.5	60									
2.2	225	4 x 5.4	4.5	60									
3.3	335	4 x 5.4	4.5	60				5 x 5.4	5	25			
4.7	475	5 x 5.4	3.5	85	5 x 5.4	3	50	6.3 x 5.4	3	40			
10	106	6.3 x 5.4	1.8	165	6.3 x 5.4	1.5	80	6.3 x 7.7	2.4	60			
					6.3 x 7.7	1.2	120						
22	226	6.3 x 7.7	1.6	185	6.3 x 7.7	1.2	120	8 x 10.2	1.3	130	8 x 10.2	1.3	130
					8 x 6.2	1.2	120						
33	336	6.3 x 7.7	1.6	185	8 x 10.2	0.65	250	8 x 10.2	1.3	130	10 x 10.2	0.7	200
47	476	8 x 10.2	0.4	300	8 x 10.2	0.65	250	10 x 10.2	0.7	200			
		10 x 10.2	0.3	342									
68	686	10 x 10.2	0.3	342	8 x 10.2	0.65	250						
100	107	10 x 10.2	0.22	670	10 x 10.2	0.35	400						
150	157	10 x 10.2	0.2	670									
220	227	10 x 10.2	0.18	670									

Maximum Allowable Ripple Current (mA rms) at 105˚C 100kHz
Maximum ESR (Ω) at 20˚C 100kHz)

Case Size ΦD x L (mm)

Specifications are subject to change without notice. Should a safety or technical concern arise regarding the product, please be sure to contact our sales offices or agents immediately.

SAMXON®
Aluminum Electrolytic Capacitors

+105˚C, Surface Mount Type, Long Life, 3,000/5,000 Hours（長壽命貼片品）

FEATURES

- Load life of 3,000/5,000 hours at 105˚C
- Reflow soldering is available
- Available for high density surface mounting

SPECIFICATIONS

Item	Performance Characteristics
Operating Temperature Range	–40 to +105˚C
Rated Working Voltage Range	6.3 to 50V
Nominal Capacitance Range	0.1 to 1000μF
Capacitance Tolerance	±20% at 120Hz, +20˚C
Leakage Current	I ≤0.01CV or 3(μA) whichever is greater measure after 2 minutes application of rated working voltage at +20˚C
tanδ (120Hz, +20˚C)	Working Voltage (V): 6.3, 10, 16, 25, 35, 50 tanδ: 0.30, 0.24, 0.20, 0.16, 0.14, 0.14
Low Temperature Characteristics	Impedance ratio max. at 120Hz Working Voltage (V): 6.3, 10, 16, 25, 35, 50 Z-25˚C / Z+20˚C: 4, 3, 2, 2, 2, 2 Z-40˚C / Z+20˚C: 12, 8, 6, 4, 3, 3
High Temperature Loading	Test time : 3,000 hours (Φ4~6.3); 5,000 hours (Φ8~10) Test temperature : +105˚C Test conditions : Rated DC working voltage Post test requirements at +20˚C Leakage current : ≤Initial specified value Cap. change : within ±30% of the initial measured value tanδ : ≤300% of the initial specified value
Shelf Life	At +105˚C no voltage applied after 1,000 hours and then being stabilized at +20˚C the capacitors shall meet the following limits Leakage current : ≤Initial specified value Cap. change : within ±30% of the initial measured value tanδ : ≤300% of the initial specified value
Industrial Standard	JIS C – 5101-4 (IEC 60384-4)

DIMENSIONS & MARKING

(Φ4～Φ6.3 × 6.0)

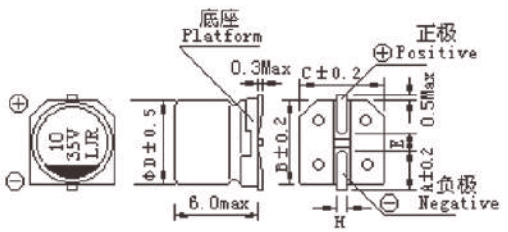

Size	Φ4 x 6.0	Φ5 x 6.0	Φ6.3 x 6.0	Φ6.3 x 8.0	Φ8 x 10.5	Φ10 x 10.5
A	1.8	2.1	2.4	2.5	2.9	3.2
B	4.3	5.3	6.6	6.6	8.3	10.3
C	4.3	5.3	6.6	6.6	8.3	10.3
D	4.0	5.0	6.3	6.3	8.0	10.0
E	1.0	1.3	2.2	2.2	3.1	4.5
L	6.0	6.0	6.0	8.0	10.5	10.5
H	0.5 ~ 0.9				0.9 ~ 1.1	

(Φ6.3× 8.0)

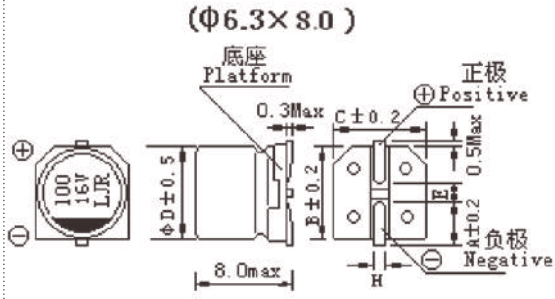

(Φ8～Φ10×10.5)

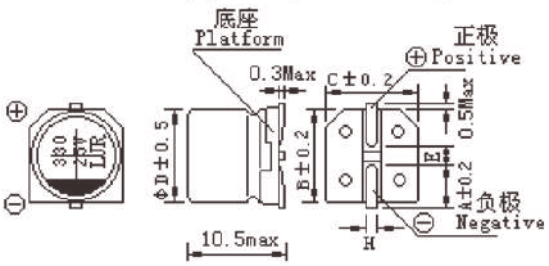

PART NUMBER SYSTEM (EXAMPLE: 25V 470μF)

1	2 3	4 5 6	7	8 9	10	11 12	13 14
V	TL	477	M	1E	G	1K	TR

- Type (Taping)
- Case Length (10.5mm)
- Diameter (10mm)
- Voltage (25V)
- Tolerance (±20%)
- Capacitance (470μF)
- Series
- V-CHIP

STANDARD RATINGS

Voltage (Code)		6.3V (0J)		10V (1A)		16V (1C)		25V (1E)	
Cap. (μF)	Code	Case Size	Ripple Current	Case Size	Ripple Current	Case Size	Ripple Current	Case Size	Ripple Current
4.7	475							4 x 6.0	13
10	106					4 x 6.0	18	4 x 6.0	20
22	226	4 x 6.0	22	4 x 6.0	27	5 x 6.0	30	6.3 x 6.0	34
33	336	5 x 6.0	30	5 x 6.0	35	6.3 x 6.0	40	6.3 x 6.0	50
47	476	5 x 6.0	38	6.3 x 6.0	48	6.3 x 6.0	50	6.3 x 8.0	63
100	107	6.3 x 6.0	69	6.3 x 8.0	80	6.3 x 8.0	81	6.3 x 8.0	90
220	227	6.3 x 8.0	120	6.3 x 8.0	130	8 x 10.5	115	8 x 10.5	170
330	337	6.3 x 8.0	130	8 x 10.5	180	8 x 10.5	195	10 x 10.5	230
470	477	8 x 10.5	210	8 x 10.5	210	10 x 10.5	260	10 x 10.5	280
1000	108	10 x 10.5	300	10 x 10.5	300				

Maximum Allowable Ripple Current (mA rms) at 105˚C 120Hz

Case Size ΦD x L (mm)

Voltage (Code)		35V (1V)		50V (1H)	
Cap. (μF)	Code	Case Size	Ripple Current	Case Size	Ripple Current
0.1	104			4 x 6.0	1.0
0.22	224			4 x 6.0	2.6
0.33	334			4 x 6.0	3.2
0.47	474			4 x 6.0	4.0
1	105			4 x 6.0	8.0
2.2	225			4 x 6.0	11
3.3	335			4 x 6.0	14
4.7	475	4 x 6.0	16	5 x 6.0	19
10	106	5 x 6.0	27	6.3 x 6.0	32
22	226	6.3 x 6.0	44	6.3 x 8.0	58
33	336	6.3 x 8.0	57	6.3 x 8.0	70
47	476	6.3 x 8.0	68	8 x 10.5	124
100	107	8 x 10.5	120	10 x 10.5	200
220	227	10 x 10.5	220	10 x 10.5	230
330	337	10 x 10.5	260		

Maximum Allowable Ripple Current (mA rms) at 105˚C 120Hz

Case Size ΦD x L (mm)

Specifications are subject to change without notice. Should a safety or technical concern arise regarding the product, please be sure to contact our sales offices or agents immediately.