STM32L151xE STM32L152xE

Ultra-low-power 32-bit MCU ARM®-based Cortex®-M3 with 512KB Flash, 80KB SRAM, 16KB EEPROM, LCD, USB, ADC, DAC

Datasheet - production data

Features

- Ultra-low-power platform
  - 1.65 V to 3.6 V power supply
  - **-40 °C to 105 °C** temperature range
  - 290 nA Standby mode (3 wakeup pins)
  - **1.11 µA Standby mode + RTC**
  - 560 nA Stop mode (16 wakeup lines)
  - 1.4 µA Stop mode + RTC
  - 11 µA Low-power run mode down to 4.6 µA in Low-power sleep mode
  - 195 µA/MHz Run mode
  - 10 nA ultra-low I/O leakage
  - 8 µs wakeup time
- Core: ARM® Cortex®-M3 32-bit CPU
  - From 32 kHz up to 32 MHz max
  - 1.25 DMIPS/MHz (Dhrystone 2.1)
  - Memory protection unit
- Up to 34 capacitive sensing channels
- CRC calculation unit, 96-bit unique ID
- Reset and supply management
  - Low-power, ultrasafe BOR (brownout reset) with 5 selectable thresholds
  - Ultra-low-power POR/PDR
  - Programmable voltage detector (PVD)
- Clock sources
  - 1 to 24 MHz crystal oscillator
  - 32 kHz oscillator for RTC with calibration
  - Internal 16 MHz oscillator factory trimmed RC(+/-1%) with PLL option
  - Internal low-power 37 kHz oscillator
  - Internal multispeed low-power 65 kHz to 4.2 MHz oscillator
  - PLL for CPU clock and USB (48 MHz)
- Pre-programmed bootloader
  - USB and USART supported
- Up to 116 fast I/Os (102 I/Os 5V tolerant), all mappable on 16 external interrupt vectors

LQFP144 (20 × 20 mm)
LQFP100 (14 × 14 mm)
LQFP64 (10 × 10 mm)

UFBGA132
(7 × 7 mm)

WLCSP104
(0.4 mm pitch)

- Memories
  - 512 Kbytes of Flash memory with ECC (with 2 banks of 256 Kbytes enabling RWW capability)
  - 80 Kbytes of RAM
  - 16 Kbytes of true EEPROM with ECC
  - 128-byte backup register
- LCD driver (except STM32L151xE devices) up to 8x40 segments, contrast adjustment, blinking mode, step-up converter
- Rich analog peripherals (down to 1.8 V)
  - 2x operational amplifiers
  - 12-bit ADC 1 Msps up to 40 channels
  - 12-bit DAC 2 ch with output buffers
  - 2x ultra-low-power comparators (window mode and wake up capability)
- DMA controller 12x channels
- 11x peripheral communication interfaces
  - 1x USB 2.0 (internal 48 MHz PLL)
  - 5x USARTs
  - Up to 8x SPIs (2x I2S, 3x 16 Mbit/s)
  - 2x I^2Cs (SMBus/PMBus)
- 11x timers: 1x 32-bit, 6x 16-bit with up to 4 IC/OC/PWM channels, 2x 16-bit basic timers, 2x watchdog timers (independent and window)
- Development support: serial wire debug, JTAG and trace

Table 1. Device summary

Reference	Part number
STM32L151xE	STM32L151QE, STM32L151RE, STM32L151VE, STM32L151ZE
STM32L152xE	STM32L152QE, STM32L152RE, STM32L152VE, STM32L152ZE

This is information on a product in full production. www.st.com

sales@prom-elec.com / ООО ПРОМЭЛЕКТРОНИКА

Contents

1 Introduction 9

2 Description 10

2.1 Device overview 11

2.2 Ultra-low-power device continuum 12

2.2.1 Performance 12

2.2.2 Shared peripherals 12

2.2.3 Common system strategy. 12

2.2.4 Features 12

3 Functional overview 13

3.1 Low-power modes 14

3.2 ARM® Cortex®-M3 core with MPU 18

3.3 Reset and supply management 19

3.3.1 Power supply schemes 19

3.3.2 Power supply supervisor 19

3.3.3 Voltage regulator 20

3.3.4 Boot modes 20

3.4 Clock management 21

3.5 Low-power real-time clock and backup registers 23

3.6 GPIOs (general-purpose inputs/outputs) 23

3.7 Memories 24

3.8 DMA (direct memory access) 24

3.9 LCD (liquid crystal display) 25

3.10 ADC (analog-to-digital converter) 25

3.10.1 Temperature sensor 25

3.10.2 Internal voltage reference (V_{REFINT}) 26

3.11 DAC (digital-to-analog converter) 26

3.12 Operational amplifier 26

3.13 Ultra-low-power comparators and reference voltage 27

3.14 System configuration controller and routing interface 27

3.15 Touch sensing 27

3.16 Timers and watchdogs 28
3.16.1 General-purpose timers (TIM2, TIM3, TIM4, TIM5, TIM9, TIM10 and TIM11) 28
3.16.2 Basic timers (TIM6 and TIM7) 29
3.16.3 SysTick timer 29
3.16.4 Independent watchdog (IWDG) 29
3.16.5 Window watchdog (WWDG) 29
3.17 Communication interfaces 29
3.17.1 I²C bus 29
3.17.2 Universal synchronous/asynchronous receiver transmitter (USART) . . 29
3.17.3 Serial peripheral interface (SPI) 30
3.17.4 Inter-integrated sound (I2S) 30
3.17.5 Universal serial bus (USB) 30
3.18 CRC (cyclic redundancy check) calculation unit 30
3.19 Development support 31
3.19.1 Serial wire JTAG debug port (SWJ-DP) 31
3.19.2 Embedded Trace Macrocell™ 31

4 Pin descriptions 32

5 Memory mapping 56

6 Electrical characteristics 57
6.1 Parameter conditions 57
6.1.1 Minimum and maximum values 57
6.1.2 Typical values 57
6.1.3 Typical curves 57
6.1.4 Loading capacitor 57
6.1.5 Pin input voltage 57
6.1.6 Power supply scheme 58
6.1.7 Optional LCD power supply scheme 59
6.1.8 Current consumption measurement 59
6.2 Absolute maximum ratings 60
6.3 Operating conditions 61
6.3.1 General operating conditions 61
6.3.2 Embedded reset and power control block characteristics 62
6.3.3 Embedded internal reference voltage 64

6.3.4 Supply current characteristics 65
6.3.5 Wakeup time from low-power mode 76
6.3.6 External clock source characteristics 77
6.3.7 Internal clock source characteristics 82
6.3.8 PLL characteristics 85
6.3.9 Memory characteristics 85
6.3.10 EMC characteristics 87
6.3.11 Electrical sensitivity characteristics 88
6.3.12 I/O current injection characteristics 89
6.3.13 I/O port characteristics 90
6.3.14 NRST pin characteristics 93
6.3.15 TIM timer characteristics 94
6.3.16 Communications interfaces 95
6.3.17 12-bit ADC characteristics 103
6.3.18 DAC electrical specifications 108
6.3.19 Operational amplifier characteristics 110
6.3.20 Temperature sensor characteristics 112
6.3.21 Comparator 112
6.3.22 LCD controller 114

7 Package information 115

7.1 LQFP144, 20 x 20 mm, 144-pin low-profile quad flat package information 115
7.2 LQFP100, 14 x 14 mm, 100-pin low-profile quad flat package information 118
7.3 LQFP64, 10 x 10 mm, 64-pin low-profile quad flat package information 121
7.4 UFBGA132, 7 x 7 mm, 132-ball ultra thin, fine-pitch ball grid array package information 124
7.5 WLCSP104, 0.4 mm pitch wafer level chip scale package information 127
7.6 Thermal characteristics 130
7.6.1 Reference document 131

8 Part numbering 132

9 Revision History 133

List of tables

Table 1. Device summary . . . 1
Table 2. Ultra-low-power STM32L151xE and STM32L152xE device features and peripheral counts . . . 11
Table 3. Functionalities depending on the operating power supply range . . . 15
Table 4. CPU frequency range depending on dynamic voltage scaling . . . 16
Table 5. Functionalities depending on the working mode (from Run/active down to standby) . . . 17
Table 6. Timer feature comparison . . . 28
Table 7. Legend/abbreviations used in the pinout table . . . 37
Table 8. STM32L151xE and STM32L152xE pin definitions . . . 37
Table 9. Alternate function input/output . . . 47
Table 10. Voltage characteristics . . . 60
Table 11. Current characteristics . . . 60
Table 12. Thermal characteristics . . . 61
Table 13. General operating conditions . . . 61
Table 14. Embedded reset and power control block characteristics . . . 62
Table 15. Embedded internal reference voltage calibration values . . . 64
Table 16. Embedded internal reference voltage . . . 64
Table 17. Current consumption in Run mode, code with data processing running from Flash . . . 66
Table 18. Current consumption in Run mode, code with data processing running from RAM . . . 67
Table 19. Current consumption in Sleep mode . . . 68
Table 20. Current consumption in Low-power run mode . . . 69
Table 21. Current consumption in Low-power sleep mode . . . 70
Table 22. Typical and maximum current consumptions in Stop mode . . . 71
Table 23. Typical and maximum current consumptions in Standby mode . . . 73
Table 24. Peripheral current consumption . . . 74
Table 25. Low-power mode wakeup timings . . . 76
Table 26. High-speed external user clock characteristics . . . 77
Table 27. Low-speed external user clock characteristics . . . 78
Table 28. HSE oscillator characteristics . . . 79
Table 29. LSE oscillator characteristics (f_{LSE} = 32.768 kHz) . . . 80
Table 30. HSI oscillator characteristics . . . 82
Table 31. LSI oscillator characteristics . . . 82
Table 32. MSI oscillator characteristics . . . 83
Table 33. PLL characteristics . . . 85
Table 34. RAM and hardware registers . . . 85
Table 35. Flash memory and data EEPROM characteristics . . . 86
Table 36. Flash memory and data EEPROM endurance and retention . . . 86
Table 37. EMS characteristics . . . 87
Table 38. EMI characteristics . . . 88
Table 39. ESD absolute maximum ratings . . . 88
Table 40. Electrical sensitivities . . . 89
Table 41. I/O current injection susceptibility . . . 89
Table 42. I/O static characteristics . . . 90
Table 43. Output voltage characteristics . . . 91
Table 44. I/O AC characteristics . . . 92
Table 45. NRST pin characteristics . . . 93
Table 46. TIMx characteristics . . . 94

Table 47. I^2C characteristics . . . 95
Table 48. SCL frequency (f_{PCLK1}= 32 MHz, V_{DD} = VDD_I2C = 3.3 V) . . . 96
Table 49. SPI characteristics . . . 97
Table 50. USB startup time . . . 100
Table 51. USB DC electrical characteristics . . . 100
Table 52. USB: full speed electrical characteristics . . . 100
Table 53. I2S characteristics . . . 101
Table 54. ADC clock frequency . . . 103
Table 55. ADC characteristics . . . 103
Table 56. ADC accuracy . . . 105
Table 57. Maximum source impedance R_{AIN} max . . . 107
Table 58. DAC characteristics . . . 108
Table 59. Operational amplifier characteristics . . . 110
Table 60. Temperature sensor calibration values . . . 112
Table 61. Temperature sensor characteristics . . . 112
Table 62. Comparator 1 characteristics . . . 112
Table 63. Comparator 2 characteristics . . . 113
Table 64. LCD controller characteristics . . . 114
Table 65. LQFP144, 20 x 20 mm, 144-pin low-profile quad flat package mechanical data . . . 116
Table 66. LQPF100, 14 x 14 mm, 100-pin low-profile quad flat package mechanical data . . . 118
Table 67. LQFP64, 10 x 10 mm 64-pin low-profile quad flat package mechanical data . . . 121
Table 68. UFBGA132, 7 x 7 mm, 132-ball ultra thin, fine-pitch ball grid array package mechanical data . . . 124
Table 69. WLCSP104, 0.4 mm pitch wafer level chip scale package mechanical data . . . 128
Table 70. WLCSP104, 0.4 mm pitch recommended PCB design rules . . . 129
Table 71. Thermal characteristics . . . 130
Table 72. STM32L151xE and STM32L152xE Ordering information scheme . . . 132
Table 73. Document revision history . . . 133

List of figures

Figure 1. Ultra-low-power STM32L151xE and STM32L152xE block diagram . . . 13
Figure 2. Clock tree . . . 22
Figure 3. STM32L15xZE LQFP144 pinout . . . 32
Figure 4. STM32L15xQE UFBGA132 ballout . . . 33
Figure 5. STM32L15xVE LQFP100 pinout . . . 34
Figure 6. STM32L15xRE LQFP64 pinout . . . 35
Figure 7. STM32L15xVEY WLCSP104 ballout . . . 36
Figure 8. Memory map . . . 56
Figure 9. Pin loading conditions . . . 57
Figure 10. Pin input voltage . . . 57
Figure 11. Power supply scheme . . . 58
Figure 12. Optional LCD power supply scheme . . . 59
Figure 13. Current consumption measurement scheme . . . 59
Figure 14. High-speed external clock source AC timing diagram . . . 77
Figure 15. Low-speed external clock source AC timing diagram . . . 78
Figure 16. HSE oscillator circuit diagram . . . 80
Figure 17. Typical application with a 32.768 kHz crystal . . . 81
Figure 18. I/O AC characteristics definition . . . 93
Figure 19. Recommended NRST pin protection . . . 94
Figure 20. I^2C bus AC waveforms and measurement circuit . . . 96
Figure 21. SPI timing diagram - slave mode and CPHA = 0 . . . 98
Figure 22. SPI timing diagram - slave mode and CPHA = 1(1) . . . 98
Figure 23. SPI timing diagram - master mode(1) . . . 99
Figure 24. USB timings: definition of data signal rise and fall time . . . 100
Figure 25. I^2S slave timing diagram (Philips protocol)(1) . . . 102
Figure 26. I^2S master timing diagram (Philips protocol)(1) . . . 102
Figure 27. ADC accuracy characteristics . . . 106
Figure 28. Typical connection diagram using the ADC . . . 106
Figure 29. Maximum dynamic current consumption on V_{REF+} supply pin during ADC conversion . . . 107
Figure 30. 12-bit buffered /non-buffered DAC . . . 110
Figure 31. LQFP144, 20 x 20 mm, 144-pin low-profile quad flat package outline . . . 115
Figure 32. LQFP144, 20 x 20 mm, 144-pin low-profile quad flat package recommended footprint . . . 117
Figure 33. LQFP144, 20 x 20 mm, 144-pin low-profile quad flat package top view example . . . 117
Figure 34. LQFP100, 14 x 14 mm, 100-pin low-profile quad flat package outline . . . 118
Figure 35. LQFP100, 14 x 14 mm, 100-pin low-profile quad flat package recommended footprint . . . 119
Figure 36. LQFP100, 14 x 14 mm, 100-pin low-profile quad flat package top view example . . . 120
Figure 37. LQFP64, 10 x 10 mm, 64-pin low-profile quad flat package outline . . . 121
Figure 38. LQFP64, 10 x 10 mm, 64-pin low-profile quad flat package recommended footprint . . . 122
Figure 39. LQFP64 10 x 10 mm, 64-pin low-profile quad flat package top view example . . . 123
Figure 40. UFBGA132, 7 x 7 mm, 132-ball ultra thin, fine-pitch ball grid array package outline . . . 124
Figure 41. UFBGA132, 7 x 7 mm, 132-ball ultra thin, fine-pitch ball grid array package recommended footprint . . . 125
Figure 42. UFBGA132, 7 x 7 mm, 132-ball ultra thin, fine-pitch ball grid array package top view example . . . 126

Figure 43. WLCSP104, 0.4 mm pitch wafer level chip scale package outline 127
Figure 44. WLCSP104, 0.4 mm pitch wafer level chip scale package recommended footprint. 128
Figure 45. WLCSP104, 0.4 mm pitch wafer level chip scale package top view example 129
Figure 46. Thermal resistance suffix 6 131
Figure 47. Thermal resistance suffix 7 131

1 Introduction

This datasheet provides the ordering information and mechanical device characteristics of the STM32L151xE and STM32L152xE ultra-low-power ARM® Cortex®-M3 based microcontroller product line. STM32L151xE and STM32L152xE devices are microcontrollers with a Flash memory density of 512 Kbytes.

The ultra-low-power STM32L151xE and STM32L152xE family includes devices in 5 different package types: from 64 pins to 144 pins. Depending on the device chosen, different sets of peripherals are included, the description below gives an overview of the complete range of peripherals proposed in this family.

These features make the ultra-low-power STM32L151xE and STM32L152xE microcontroller family suitable for a wide range of applications:

- Medical and handheld equipment
- Application control and user interface
- PC peripherals, gaming, GPS and sport equipment
- Alarm systems, wired and wireless sensors, video intercom
- Utility metering

This STM32L151xE and STM32L152xE datasheet should be read in conjunction with the STM32L1xxxx reference manual (RM0038). The application note “Getting started with STM32L1xxxx hardware development” (AN3216) gives a hardware implementation overview. Both documents are available from the STMicroelectronics website *www.st.com*.

For information on the ARM® Cortex®-M3 core please refer to the ARM® Cortex®-M3 technical reference manual, available from the www.arm.com website. *Figure 1* shows the general block diagram of the device family.

2 Description

The ultra-low-power STM32L151xE and STM32L152xE devices incorporate the connectivity power of the universal serial bus (USB) with the high-performance ARM® Cortex®-M3 32-bit RISC core operating at a frequency of 32 MHz (33.3 DMIPS), a memory protection unit (MPU), high-speed embedded memories (Flash memory up to 512 Kbytes and RAM up to 80 Kbytes), and an extensive range of enhanced I/Os and peripherals connected to two APB buses.

The STM32L151xE and STM32L152xE devices offer two operational amplifiers, one 12-bit ADC, two DACs, two ultra-low-power comparators, one general-purpose 32-bit timer, six general-purpose 16-bit timers and two basic timers, which can be used as time bases.

Moreover, the STM32L151xE and STM32L152xE devices contain standard and advanced communication interfaces: up to two I2Cs, three SPIs, two I2S, three USARTs, two UARTs and an USB. The STM32L151xE and STM32L152xE devices offer up to 34 capacitive sensing channels to simply add a touch sensing functionality to any application.

They also include a real-time clock and a set of backup registers that remain powered in Standby mode.

Finally, the integrated LCD controller (except STM32L151xE devices) has a built-in LCD voltage generator that allows to drive up to 8 multiplexed LCDs with the contrast independent of the supply voltage.

The ultra-low-power STM32L151xE and STM32L152xE devices operate from a 1.8 to 3.6 V power supply (down to 1.65 V at power down) with BOR and from a 1.65 to 3.6 V power supply without BOR option. They are available in the -40 to +85 °C and -40 to +105 °C temperature ranges. A comprehensive set of power-saving modes allows the design of low-power applications.

2.1 Device overview

Table 2. Ultra-low-power STM32L151xE and STM32L152xE device features and peripheral counts

Peripheral		STM32L15xRE	STM32L15xVE	STM32L15xQE	STM32L15xZE
Flash (Kbytes)		512			
Data EEPROM (Kbytes)		16			
RAM (Kbytes)		80			
Timers	**32 bit**	1			
	General-purpose	6			
	Basic	2			
Communication interfaces	**SPI**	8(3)(1)			
	I^2S	2			
	I^2C	2			
	USART	5			
	USB	1			
GPIOs		51	83	109	115
Operational amplifiers		2			
12-bit synchronized ADC **Number of channels**		1 21	1 25	1 40	1 40
12-bit DAC **Number of channels**		2 2			
LCD (2) **COM x SEG**		1 4x32 or 8x28	1 4x44 or 8x40		
Comparators		2			
Capacitive sensing channels		23		33	34
Max. CPU frequency		32 MHz			
Operating voltage		1.8 V to 3.6 V (down to 1.65 V at power-down) with BOR option 1.65 V to 3.6 V without BOR option			
Operating temperatures		Ambient operating temperature: -40 °C to 85 °C / -40 °C to 105 °C Junction temperature: –40 to + 110 °C			
Packages		LQFP64	LQFP100, WLCSP104	UFBGA132	LQFP144

1. 5 SPIs are USART configured in synchronous mode emulating SPI master.
2. STM32L152xx devices only.

2.2 Ultra-low-power device continuum

The ultra-low-power family offers a large choice of cores and features. From proprietary 8-bit to up to Cortex-M3, including the Cortex-M0+, the STM32Lx series are the best choice to answer the user needs, in terms of ultra-low-power features. The STM32 ultra-low-power series are the best fit, for instance, for gas/water meter, keyboard/mouse or fitness and healthcare, wearable applications. Several built-in features like LCD drivers, dual-bank memory, Low-power run mode, op-amp, AES 128-bit, DAC, USB crystal-less and many others will clearly allow to build very cost-optimized applications by reducing BOM.

Note: STMicroelectronics as a reliable and long-term manufacturer ensures as much as possible the pin-to-pin compatibility between any STM8Lxxxxx and STM32Lxxxxx devices and between any of the STM32Lx and STM32Fx series. Thanks to this unprecedented scalability, the old applications can be upgraded to respond to the latest market features and efficiency demand.

2.2.1 Performance

All the families incorporate highly energy-efficient cores with both Harvard architecture and pipelined execution: advanced STM8 core for STM8L families and ARM Cortex-M3 core for STM32L family. In addition specific care for the design architecture has been taken to optimize the mA/DMIPS and mA/MHz ratios.

This allows the ultra-low-power performance to range from 5 up to 33.3 DMIPs.

2.2.2 Shared peripherals

STM8L15xxx, STM32L15xxx and STM32L162xx share identical peripherals which ensure a very easy migration from one family to another:

- Analog peripherals: ADC, DAC and comparators
- Digital peripherals: RTC and some communication interfaces

2.2.3 Common system strategy.

To offer flexibility and optimize performance, the STM8L15xxx, STM32L15xxx and STM32L162xx family uses a common architecture:

- Same power supply range from 1.65 V to 3.6 V
- Architecture optimized to reach ultra-low consumption both in low-power modes and Run mode
- Fast startup strategy from low-power modes
- Flexible system clock
- Ultrasafe reset: same reset strategy including power-on reset, power-down reset, brownout reset and programmable voltage detector

2.2.4 Features

ST ultra-low-power continuum also lies in feature compatibility:

- More than 15 packages with pin count from 20 to 144 pins and size down to 3 x 3 mm
- Memory density ranging from 2 to 512 Kbytes

3 Functional overview

Figure 1. Ultra-low-power STM32L151xE and STM32L152xE block diagram

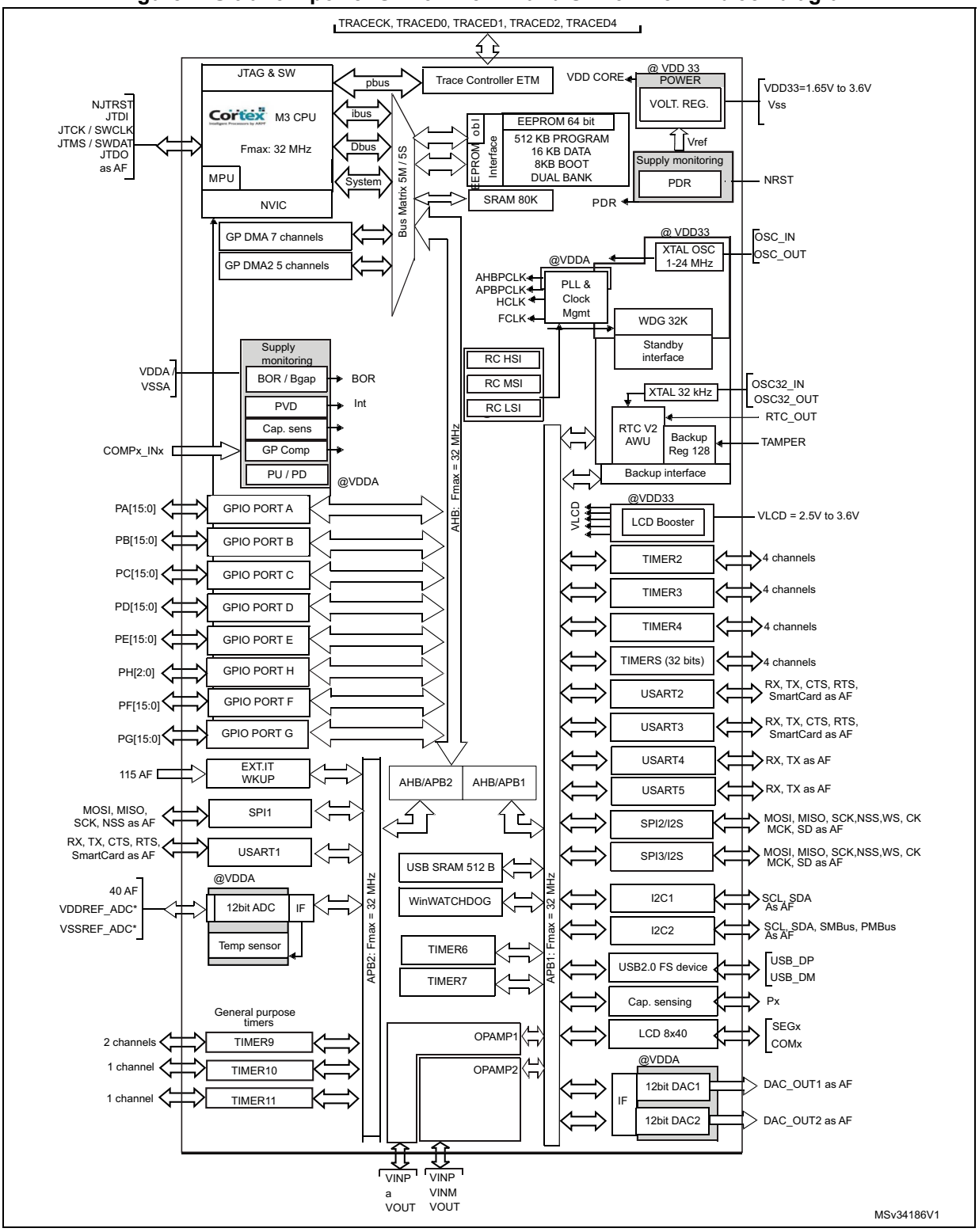

3.1 Low-power modes

The ultra-low-power STM32L151xE and STM32L152xE devices support dynamic voltage scaling to optimize its power consumption in run mode. The voltage from the internal low-drop regulator that supplies the logic can be adjusted according to the system's maximum operating frequency and the external voltage supply.

There are three power consumption ranges:

- Range 1 (V_{DD} range limited to 1.71 V - 3.6 V), with the CPU running at up to 32 MHz
- Range 2 (full V_{DD} range), with a maximum CPU frequency of 16 MHz
- Range 3 (full V_{DD} range), with a maximum CPU frequency limited to 4 MHz (generated only with the multispeed internal RC oscillator clock source)

Seven low-power modes are provided to achieve the best compromise between low-power consumption, short startup time and available wakeup sources:

- **Sleep** mode

  In Sleep mode, only the CPU is stopped. All peripherals continue to operate and can wake up the CPU when an interrupt/event occurs. Sleep mode power consumption at 16 MHz is about 1 mA with all peripherals off.

- **Low-power run** mode

  This mode is achieved with the multispeed internal (MSI) RC oscillator set to the MSI range 0 or MSI range 1 clock range (maximum 131 kHz), execution from SRAM or Flash memory, and internal regulator in low-power mode to minimize the regulator's operating current. In low-power run mode, the clock frequency and the number of enabled peripherals are both limited.

- **Low-power sleep** mode

  This mode is achieved by entering Sleep mode with the internal voltage regulator in Low-power mode to minimize the regulator's operating current. In Low-power sleep mode, both the clock frequency and the number of enabled peripherals are limited; a typical example would be to have a timer running at 32 kHz.

  When wakeup is triggered by an event or an interrupt, the system reverts to the run mode with the regulator on.

- **Stop** mode with RTC

  Stop mode achieves the lowest power consumption while retaining the RAM and register contents and real time clock. All clocks in the V_{CORE} domain are stopped, the PLL, MSI RC, HSI RC and HSE crystal oscillators are disabled. The LSE or LSI is still running. The voltage regulator is in the low-power mode.

  The device can be woken up from Stop mode by any of the EXTI line, in 8 µs. The EXTI line source can be one of the 16 external lines. It can be the PVD output, the Comparator 1 event or Comparator 2 event (if internal reference voltage is on), it can be the RTC alarm(s), the USB wakeup, the RTC tamper events, the RTC timestamp event or the RTC wakeup.

- **Stop** mode without RTC

  Stop mode achieves the lowest power consumption while retaining the RAM and register contents. All clocks are stopped, the PLL, MSI RC, HSI and LSI RC, LSE and HSE crystal oscillators are disabled. The voltage regulator is in the low-power mode. The device can be woken up from Stop mode by any of the EXTI line, in 8 µs. The EXTI line source can be one of the 16 external lines. It can be the PVD output, the Comparator 1 event or Comparator 2 event (if internal reference voltage is on). It can also be wakened by the USB wakeup.
- **Standby** mode with RTC

  Standby mode is used to achieve the lowest power consumption and real time clock. The internal voltage regulator is switched off so that the entire V_{CORE} domain is powered off. The PLL, MSI RC, HSI RC and HSE crystal oscillators are also switched off. The LSE or LSI is still running. After entering Standby mode, the RAM and register contents are lost except for registers in the Standby circuitry (wakeup logic, IWDG, RTC, LSI, LSE Crystal 32K osc, RCC_CSR).

  The device exits Standby mode in 60 µs when an external reset (NRST pin), an IWDG reset, a rising edge on one of the three WKUP pins, RTC alarm (Alarm A or Alarm B), RTC tamper event, RTC timestamp event or RTC Wakeup event occurs.
- **Standby** mode without RTC

  Standby mode is used to achieve the lowest power consumption. The internal voltage regulator is switched off so that the entire V_{CORE} domain is powered off. The PLL, MSI RC, HSI and LSI RC, HSE and LSE crystal oscillators are also switched off. After entering Standby mode, the RAM and register contents are lost except for registers in the Standby circuitry (wakeup logic, IWDG, RTC, LSI, LSE Crystal 32K osc, RCC_CSR).

  The device exits Standby mode in 60 µs when an external reset (NRST pin) or a rising edge on one of the three WKUP pin occurs.

Note: The RTC, the IWDG, and the corresponding clock sources are not stopped automatically by entering Stop or Standby mode.

Table 3. Functionalities depending on the operating power supply range

	Functionalities depending on the operating power supply range(1)		
Operating power supply range	**DAC and ADC operation**	**USB**	**Dynamic voltage scaling range**
V_{DD}= V_{DDA} = 1.65 to 1.71 V	Not functional	Not functional	Range 2 or Range 3
V_{DD}=V_{DDA}= 1.71 to 1.8 V(2)	Not functional	Not functional	Range 1, Range 2 or Range 3
V_{DD}=V_{DDA}= 1.8 to 2.0 V(2)	Conversion time up to 500 Ksps	Not functional	Range 1, Range 2 or Range 3

Table 3. Functionalities depending on the operating power supply range (continued)

	Functionalities depending on the operating power supply range(1)		
Operating power supply range	**DAC and ADC operation**	**USB**	**Dynamic voltage scaling range**
V_{DD}=V_{DDA} = 2.0 to 2.4 V	Conversion time up to 500 Ksps	Functional(3)	Range 1, Range 2 or Range 3
V_{DD}=V_{DDA} = 2.4 to 3.6 V	Conversion time up to 1 Msps	Functional(3)	Range 1, Range 2 or Range 3

1. The GPIO speed also depends from VDD voltage and the user has to refer to *Table 44: I/O AC characteristics* for more information about I/O speed.
2. CPU frequency changes from initial to final must respect "F_{CPU} initial < 4*F_{CPU} final" to limit V_{CORE} drop due to current consumption peak when frequency increases. It must also respect 5 µs delay between two changes. For example to switch from 4.2 MHz to 32 MHz, the user can switch from 4.2 MHz to 16 MHz, wait 5 µs, then switch from 16 MHz to 32 MHz.
3. Should be USB compliant from I/O voltage standpoint, the minimum V_{DD} is 3.0 V.

Table 4. CPU frequency range depending on dynamic voltage scaling

CPU frequency range	Dynamic voltage scaling range
16 MHz to 32 MHz (1ws) 32 kHz to 16 MHz (0ws)	Range 1
8 MHz to 16 MHz (1ws) 32 kHz to 8 MHz (0ws)	Range 2
2.1MHz to 4.2 MHz (1ws) 32 kHz to 2.1 MHz (0ws)	Range 3

Table 5. Functionalities depending on the working mode (from Run/active down to standby)

Ips	Run/Active	Sleep	Low-power Run	Low-power Sleep	Stop		Standby	
						Wakeup capability		Wakeup capability
CPU	Y	--	Y	--	--	--	--	--
Flash	Y	Y	Y	Y	--	--	--	--
RAM	Y	Y	Y	Y	Y	--	--	--
Backup Registers	Y	Y	Y	Y	Y	--	Y	--
EEPROM	Y	Y	Y	Y	Y	--	--	--
Brown-out rest (BOR)	Y	Y	Y	Y	Y	Y	Y	--
DMA	Y	Y	Y	Y	--	--	--	--
Programmable Voltage Detector (PVD)	Y	Y	Y	Y	Y	Y	Y	--
Power On Reset (POR)	Y	Y	Y	Y	Y	Y	Y	--
Power Down Rest (PDR)	Y	Y	Y	Y	Y	--	Y	--
High Speed Internal (HSI)	Y	Y	--	--	--	--	--	--
High Speed External (HSE)	Y	Y	--	--	--	--	--	--
Low Speed Internal (LSI)	Y	Y	Y	Y	Y	--	Y	--
Low Speed External (LSE)	Y	Y	Y	Y	Y	--	Y	--
Multi-Speed Internal (MSI)	Y	Y	Y	Y	--	--	--	--
Inter-Connect Controller	Y	Y	Y	Y	--	--	--	--
RTC	Y	Y	Y	Y	Y	Y	Y	--
RTC Tamper	Y	Y	Y	Y	Y	Y	Y	Y
Auto WakeUp (AWU)	Y	Y	Y	Y	Y	Y	Y	Y
LCD	Y	Y	Y	Y	Y	--	--	--
USB	Y	Y	--	--	--	Y	--	--
USART	Y	Y	Y	Y	Y	(1)	--	--
SPI	Y	Y	Y	Y	--	--	--	--
I2C	Y	Y	--	--	--	(1)	--	--

Table 5. Functionalities depending on the working mode (from Run/active down to standby) (continued)

Ips	Run/Active	Sleep	Low-power Run	Low-power Sleep	Stop		Standby	
						Wakeup capability		Wakeup capability
ADC	Y	Y	--	--	--	--	--	--
DAC	Y	Y	Y	Y	Y	--	--	--
Tempsensor	Y	Y	Y	Y	Y	--	--	--
OP amp	Y	Y	Y	Y	Y	--	--	--
Comparators	Y	Y	Y	Y	Y	Y	--	--
16-bit and 32-bit Timers	Y	Y	Y	Y	--	--	--	--
IWDG	Y	Y	Y	Y	Y	Y	Y	Y
WWDG	Y	Y	Y	Y	--	--	--	--
Touch sensing	Y	Y	--	--	--	--	--	--
Systic Timer	Y	Y	Y	Y		--	--	--
GPIOs	Y	Y	Y	Y	Y	Y	--	3 pins
Wakeup time to Run mode	0 µs	0.4 µs	3 µs	46 µs	< 8 µs		58 µs	
Consumption V_{DD}=1.8 to 3.6 V (Typ)	Down to 195 µA/MHz (from Flash)	Down to 38 µA/MHz (from Flash)	Down to 11 µA	Down to 4.6 µA	0.53 µA (no RTC) V_{DD}=1.8V		0.285 µA (no RTC) V_{DD}=1.8V	
					1.2 µA (with RTC) V_{DD}=1.8V		0.97 µA (with RTC) V_{DD}=1.8V	
					0.56 µA (no RTC) V_{DD}=3.0V		0.29 µA (no RTC) V_{DD}=3.0V	
					1.4 µA (with RTC) V_{DD}=3.0V		1.11 µA (with RTC) V_{DD}=3.0V	

1. The startup on communication line wakes the CPU which was made possible by an EXTI, this induces a delay before entering run mode.

3.2 ARM® Cortex®-M3 core with MPU

The ARM® Cortex®-M3 processor is the industry leading processor for embedded systems. It has been developed to provide a low-cost platform that meets the needs of MCU implementation, with a reduced pin count and low-power consumption, while delivering outstanding computational performance and an advanced system response to interrupts.

The ARM® Cortex®-M3 32-bit RISC processor features exceptional code-efficiency, delivering the high-performance expected from an ARM core in the memory size usually associated with 8- and 16-bit devices.

The memory protection unit (MPU) improves system reliability by defining the memory attributes (such as read/write access permissions) for different memory regions. It provides up to eight different regions and an optional predefined background region.

Owing to its embedded ARM core, the STM32L151xE and STM32L152xE devices are compatible with all ARM tools and software.

Nested vectored interrupt controller (NVIC)

The ultra-low-power STM32L151xE and STM32L152xE devices embed a nested vectored interrupt controller able to handle up to 56 maskable interrupt channels (not including the 16 interrupt lines of ARM® Cortex®-M3) and 16 priority levels.

- Closely coupled NVIC gives low-latency interrupt processing
- Interrupt entry vector table address passed directly to the core
- Closely coupled NVIC core interface
- Allows early processing of interrupts
- Processing of *late arriving*, higher-priority interrupts
- Support for tail-chaining
- Processor state automatically saved on interrupt entry, and restored on interrupt exit, with no instruction overhead

This hardware block provides flexible interrupt management features with minimal interrupt latency.

3.3 Reset and supply management

3.3.1 Power supply schemes

- V_{DD} = 1.65 to 3.6 V: external power supply for I/Os and the internal regulator. Provided externally through V_{DD} pins.
- V_{SSA}, V_{DDA} = 1.65 to 3.6 V: external analog power supplies for ADC, reset blocks, RCs and PLL (minimum voltage to be applied to V_{DDA} is 1.8 V when the ADC is used). V_{DDA} and V_{SSA} must be connected to V_{DD} and V_{SS}, respectively.

3.3.2 Power supply supervisor

The device has an integrated ZEROPOWER power-on reset (POR)/power-down reset (PDR) that can be coupled with a brownout reset (BOR) circuitry.

The device exists in two versions:

- The version with BOR activated at power-on operates between 1.8 V and 3.6 V.
- The other version without BOR operates between 1.65 V and 3.6 V.

After the V_{DD} threshold is reached (1.65 V or 1.8 V depending on the BOR which is active or not at power-on), the option byte loading process starts, either to confirm or modify default thresholds, or to disable the BOR permanently: in this case, the V_{DD} min value becomes 1.65 V (whatever the version, BOR active or not, at power-on).

When BOR is active at power-on, it ensures proper operation starting from 1.8 V whatever the power ramp-up phase before it reaches 1.8 V. When BOR is not active at power-up, the power ramp-up should guarantee that 1.65 V is reached on V_{DD} at least 1 ms after it exits the POR area.

Five BOR thresholds are available through option bytes, starting from 1.8 V to 3 V. To reduce the power consumption in Stop mode, it is possible to automatically switch off the internal reference voltage (V_{REFINT}) in Stop mode. The device remains in reset mode when V_{DD} is below a specified threshold, $V_{POR/PDR}$ or V_{BOR}, without the need for any external reset circuit.

Note: The start-up time at power-on is typically 3.3 ms when BOR is active at power-up, the start-up time at power-on can be decreased down to 1 ms typically for devices with BOR inactive at power-up.

The device features an embedded programmable voltage detector (PVD) that monitors the V_{DD}/V_{DDA} power supply and compares it to the V_{PVD} threshold. This PVD offers 7 different levels between 1.85 V and 3.05 V, chosen by software, with a step around 200 mV. An interrupt can be generated when V_{DD}/V_{DDA} drops below the V_{PVD} threshold and/or when V_{DD}/V_{DDA} is higher than the V_{PVD} threshold. The interrupt service routine can then generate a warning message and/or put the MCU into a safe state. The PVD is enabled by software.

3.3.3 Voltage regulator

The regulator has three operation modes: main (MR), low-power (LPR) and power down.

- MR is used in Run mode (nominal regulation)
- LPR is used in the Low-power run, Low-power sleep and Stop modes
- Power down is used in Standby mode. The regulator output is high impedance, the kernel circuitry is powered down, inducing zero consumption but the contents of the registers and RAM are lost except for the standby circuitry (wakeup logic, IWDG, RTC, LSI, LSE crystal 32K osc, RCC_CSR).

3.3.4 Boot modes

At startup, boot pins are used to select one of three boot options:

- Boot from Flash memory
- Boot from System memory
- Boot from embedded RAM

The boot from Flash usually boots at the beginning of the Flash (bank 1). An additional boot mechanism is available through user option byte, to allow booting from bank 2 when bank 2 contains valid code. This dual boot capability can be used to easily implement a secure field software update mechanism.

The boot loader is located in System memory. It is used to reprogram the Flash memory by using USART1, USART2 or USB. See Application note “STM32 microcontroller system memory boot mode” (AN2606) for details.

3.4 Clock management

The clock controller distributes the clocks coming from different oscillators to the core and the peripherals. It also manages clock gating for low-power modes and ensures clock robustness. It features:

- **Clock prescaler**: to get the best trade-off between speed and current consumption, the clock frequency to the CPU and peripherals can be adjusted by a programmable prescaler.
- **Safe clock switching**: clock sources can be changed safely on the fly in run mode through a configuration register.
- **Clock management**: to reduce power consumption, the clock controller can stop the clock to the core, individual peripherals or memory.
- **System clock source**: three different clock sources can be used to drive the master clock SYSCLK:
  - 1-24 MHz high-speed external crystal (HSE), that can supply a PLL
  - 16 MHz high-speed internal RC oscillator (HSI), trimmable by software, that can supply a PLL
  - Multispeed internal RC oscillator (MSI), trimmable by software, able to generate 7 frequencies (65 kHz, 131 kHz, 262 kHz, 524 kHz, 1.05 MHz, 2.1 MHz, 4.2 MHz). When a 32.768 kHz clock source is available in the system (LSE), the MSI frequency can be trimmed by software down to a ±0.5% accuracy.
- **Auxiliary clock source**: two ultra-low-power clock sources that can be used to drive the LCD controller and the real-time clock:
  - 32.768 kHz low-speed external crystal (LSE)
  - 37 kHz low-speed internal RC (LSI), also used to drive the independent watchdog. The LSI clock can be measured using the high-speed internal RC oscillator for greater precision.
- **RTC and LCD clock sources:** the LSI, LSE or HSE sources can be chosen to clock the RTC and the LCD, whatever the system clock.
- **USB clock source:** the embedded PLL has a dedicated 48 MHz clock output to supply the USB interface.
- **Startup clock:** after reset, the microcontroller restarts by default with an internal 2 MHz clock (MSI). The prescaler ratio and clock source can be changed by the application program as soon as the code execution starts.
- **Clock security system (CSS):** this feature can be enabled by software. If a HSE clock failure occurs, the master clock is automatically switched to HSI and a software interrupt is generated if enabled.
- **Clock-out capability (MCO: microcontroller clock output):** it outputs one of the internal clocks for external use by the application.

Several prescalers allow the configuration of the AHB frequency, each APB (APB1 and APB2) domains. The maximum frequency of the AHB and the APB domains is 32 MHz. See *Figure 2* for details on the clock tree.

Figure 2. Clock tree

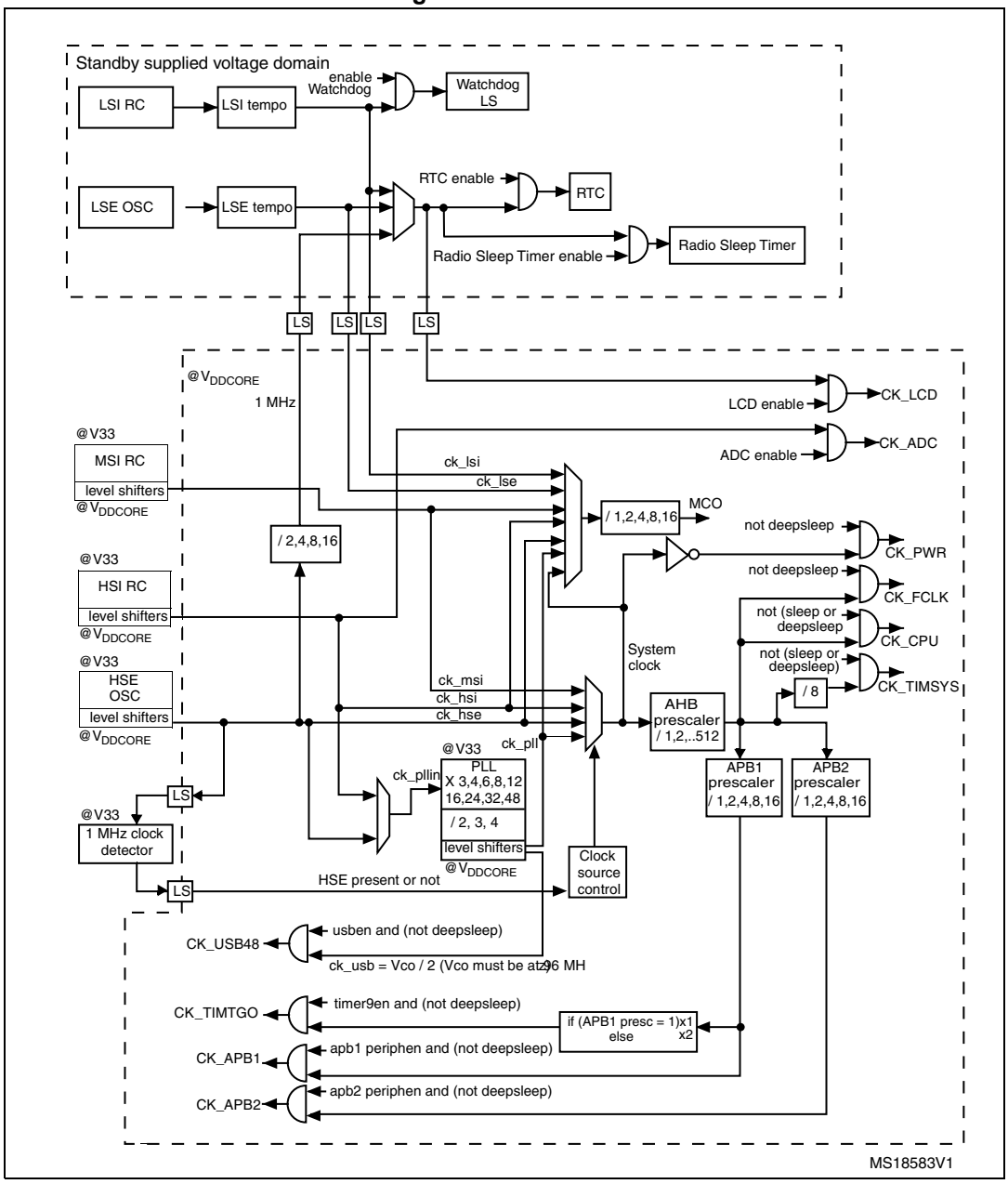

3.5 Low-power real-time clock and backup registers

The real-time clock (RTC) is an independent BCD timer/counter. Dedicated registers contain the sub-second, second, minute, hour (12/24 hour), week day, date, month, year, in BCD (binary-coded decimal) format. Correction for 28, 29 (leap year), 30, and 31 day of the month are made automatically. The RTC provides two programmable alarms and programmable periodic interrupts with wakeup from Stop and Standby modes.

The programmable wakeup time ranges from 120 µs to 36 hours.

The RTC can be calibrated with an external 512 Hz output, and a digital compensation circuit helps reduce drift due to crystal deviation.

The RTC can also be automatically corrected with a 50/60Hz stable powerline.

The RTC calendar can be updated on the fly down to sub second precision, which enables network system synchronization.

A time stamp can record an external event occurrence, and generates an interrupt.

There are thirty-two 32-bit backup registers provided to store 128 bytes of user application data. They are cleared in case of tamper detection.

Three pins can be used to detect tamper events. A change on one of these pins can reset backup register and generate an interrupt. To prevent false tamper event, like ESD event, these three tamper inputs can be digitally filtered.

3.6 GPIOs (general-purpose inputs/outputs)

Each of the GPIO pins can be configured by software as output (push-pull or open-drain), as input (with or without pull-up or pull-down) or as peripheral alternate function. Most of the GPIO pins are shared with digital or analog alternate functions, and can be individually remapped using dedicated AFIO registers. All GPIOs are high current capable. The alternate function configuration of I/Os can be locked if needed following a specific sequence in order to avoid spurious writing to the I/O registers. The I/O controller is connected to the AHB with a toggling speed of up to 16 MHz.

External interrupt/event controller (EXTI)

The external interrupt/event controller consists of 24 edge detector lines used to generate interrupt/event requests. Each line can be individually configured to select the trigger event (rising edge, falling edge, both) and can be masked independently. A pending register maintains the status of the interrupt requests. The EXTI can detect an external line with a pulse width shorter than the Internal APB2 clock period. Up to 115 GPIOs can be connected to the 16 external interrupt lines. The 8 other lines are connected to RTC, PVD, USB, comparator events or capacitive sensing acquisition.

3.7 Memories

The STM32L151xE and STM32L152xE devices have the following features:

- 80 Kbytes of embedded RAM accessed (read/write) at CPU clock speed with 0 wait states. With the enhanced bus matrix, operating the RAM does not lead to any performance penalty during accesses to the system bus (AHB and APB buses).
- The non-volatile memory is divided into three arrays:
  - 512 Kbytes of embedded Flash program memory
  - 16 Kbytes of data EEPROM
  - Options bytes

  Flash program and data EEPROM are divided into two banks, this enables writing in one bank while running code or reading data in the other bank.

  The options bytes are used to write-protect or read-out protect the memory (with 4 Kbytes granularity) and/or readout-protect the whole memory with the following options:
  - Level 0: no readout protection
  - Level 1: memory readout protection, the Flash memory cannot be read from or written to if either debug features are connected or boot in RAM is selected
  - Level 2: chip readout protection, debug features (ARM Cortex-M3 JTAG and serial wire) and boot in RAM selection disabled (JTAG fuse)

  The whole non-volatile memory embeds the error correction code (ECC) feature.

3.8 DMA (direct memory access)

The flexible 12-channel, general-purpose DMA is able to manage memory-to-memory, peripheral-to-memory and memory-to-peripheral transfers. The DMA controller supports circular buffer management, avoiding the generation of interrupts when the controller reaches the end of the buffer.

Each channel is connected to dedicated hardware DMA requests, with software trigger support for each channel. Configuration is done by software and transfer sizes between source and destination are independent.

The DMA can be used with the main peripherals: SPI, I^2C, USART, general-purpose timers, DAC and ADC.

3.9 LCD (liquid crystal display)

The LCD drives up to 8 common terminals and 44 segment terminals to drive up to 320 pixels.

- Internal step-up converter to guarantee functionality and contrast control irrespective of V_{DD}. This converter can be deactivated, in which case the V_{LCD} pin is used to provide the voltage to the LCD
- Supports static, 1/2, 1/3, 1/4 and 1/8 duty
- Supports static, 1/2, 1/3 and 1/4 bias
- Phase inversion to reduce power consumption and EMI
- Up to 8 pixels can be programmed to blink
- Unneeded segments and common pins can be used as general I/O pins
- LCD RAM can be updated at any time owing to a double-buffer
- The LCD controller can operate in Stop mode

3.10 ADC (analog-to-digital converter)

A 12-bit analog-to-digital converters is embedded into STM32L151xE and STM32L152xE devices with up to 40 external channels, performing conversions in single-shot or scan mode. In scan mode, automatic conversion is performed on a selected group of analog inputs with up to 28 external channels in a group.

The ADC can be served by the DMA controller.

An analog watchdog feature allows very precise monitoring of the converted voltage of one, some or all scanned channels. An interrupt is generated when the converted voltage is outside the programmed thresholds.

The events generated by the general-purpose timers (TIMx) can be internally connected to the ADC start triggers, to allow the application to synchronize A/D conversions and timers. An injection mode allows high priority conversions to be done by interrupting a scan mode which runs in as a background task.

The ADC includes a specific low-power mode. The converter is able to operate at maximum speed even if the CPU is operating at a very low frequency and has an auto-shutdown function. The ADC's runtime and analog front-end current consumption are thus minimized whatever the MCU operating mode.

3.10.1 Temperature sensor

The temperature sensor (TS) generates a voltage V_{SENSE} that varies linearly with temperature.

The temperature sensor is internally connected to the ADC_IN16 input channel which is used to convert the sensor output voltage into a digital value.

The sensor provides good linearity but it has to be calibrated to obtain good overall accuracy of the temperature measurement. As the offset of the temperature sensor varies from chip to chip due to process variation, the uncalibrated internal temperature sensor is suitable for applications that detect temperature changes only.

To improve the accuracy of the temperature sensor measurement, each device is individually factory-calibrated by ST. The temperature sensor factory calibration data are

stored by ST in the system memory area, accessible in read-only mode. See *Table 60: Temperature sensor calibration values*.

3.10.2 Internal voltage reference (V_{REFINT})

The internal voltage reference (V_{REFINT}) provides a stable (bandgap) voltage output for the ADC and Comparators. V_{REFINT} is internally connected to the ADC_IN17 input channel. It enables accurate monitoring of the V_{DD} value (when no external voltage, VREF+, is available for ADC). The precise voltage of V_{REFINT} is individually measured for each part by ST during production test and stored in the system memory area. It is accessible in read-only mode. See *Table 15: Embedded internal reference voltage calibration values*.

3.11 DAC (digital-to-analog converter)

The two 12-bit buffered DAC channels can be used to convert two digital signals into two analog voltage signal outputs. The chosen design structure is composed of integrated resistor strings and an amplifier in non-inverting configuration.

This dual digital Interface supports the following features:

- Two DAC converters: one for each output channel
- 8-bit or 12-bit monotonic output
- Left or right data alignment in 12-bit mode
- Synchronized update capability
- Noise-wave generation
- Triangular-wave generation
- Dual DAC channels, independent or simultaneous conversions
- DMA capability for each channel (including the underrun interrupt)
- External triggers for conversion
- Input reference voltage V_{REF+}

Eight DAC trigger inputs are used in the STM32L151xE and STM32L152xE devices. The DAC channels are triggered through the timer update outputs that are also connected to different DMA channels.

3.12 Operational amplifier

The STM32L151xE and STM32L152xE devices embed two operational amplifiers with external or internal follower routing capability (or even amplifier and filter capability with external components). When one operational amplifier is selected, one external ADC channel is used to enable output measurement.

The operational amplifiers feature:

- Low input bias current
- Low offset voltage
- Low-power mode
- Rail-to-rail input

3.13 Ultra-low-power comparators and reference voltage

The STM32L151xE and STM32L152xE devices embed two comparators sharing the same current bias and reference voltage. The reference voltage can be internal or external (coming from an I/O).

- One comparator with fixed threshold
- One comparator with rail-to-rail inputs, fast or slow mode. The threshold can be one of the following:
  - DAC output
  - External I/O
  - Internal reference voltage (V_{REFINT}) or a sub-multiple (1/4, 1/2, 3/4)

Both comparators can wake up from Stop mode, and be combined into a window comparator.

The internal reference voltage is available externally via a low-power / low-current output buffer (driving current capability of 1 µA typical).

3.14 System configuration controller and routing interface

The system configuration controller provides the capability to remap some alternate functions on different I/O ports.

The highly flexible routing interface allows the application firmware to control the routing of different I/Os to the TIM2, TIM3 and TIM4 timer input captures. It also controls the routing of internal analog signals to ADC1, COMP1 and COMP2 and the internal reference voltage V_{REFINT}.

3.15 Touch sensing

The STM32L151xE and STM32L152xE devices provide a simple solution for adding capacitive sensing functionality to any application. These devices offer up to 34 capacitive sensing channels distributed over 11 analog I/O groups. Both software and timer capacitive sensing acquisition modes are supported.

Capacitive sensing technology is able to detect the presence of a finger near a sensor which is protected from direct touch by a dielectric (glass, plastic...). The capacitive variation introduced by the finger (or any conductive object) is measured using a proven implementation based on a surface charge transfer acquisition principle. It consists of charging the sensor capacitance and then transferring a part of the accumulated charges into a sampling capacitor until the voltage across this capacitor has reached a specific threshold. The capacitive sensing acquisition only requires few external components to operate. This acquisition is managed directly by the GPIOs, timers and analog I/O groups (see *Section 3.14: System configuration controller and routing interface*).

Reliable touch sensing functionality can be quickly and easily implemented using the free STM32L1xx STMTouch touch sensing firmware library.

3.16 Timers and watchdogs

The ultra-low-power STM32L151xE and STM32L152xE devices include seven general-purpose timers, two basic timers, and two watchdog timers.

Table 6 compares the features of the general-purpose and basic timers.

Table 6. Timer feature comparison

Timer	Counter resolution	Counter type	Prescaler factor	DMA request generation	Capture/compare channels	Complementary outputs
TIM2, TIM3, TIM4	16-bit	Up, down, up/down	Any integer between 1 and 65536	Yes	4	No
TIM5	32-bit	Up, down, up/down	Any integer between 1 and 65536	Yes	4	No
TIM9	16-bit	Up, down, up/down	Any integer between 1 and 65536	No	2	No
TIM10, TIM11	16-bit	Up	Any integer between 1 and 65536	No	1	No
TIM6, TIM7	16-bit	Up	Any integer between 1 and 65536	Yes	0	No

3.16.1 General-purpose timers (TIM2, TIM3, TIM4, TIM5, TIM9, TIM10 and TIM11)

There are seven synchronizable general-purpose timers embedded in the STM32L151xE and STM32L152xE devices (see *Table 6* for differences).

TIM2, TIM3, TIM4, TIM5

TIM2, TIM3, TIM4 are based on 16-bit auto-reload up/down counter. TIM5 is based on a 32-bit auto-reload up/down counter. They include a 16-bit prescaler. They feature four independent channels each for input capture/output compare, PWM or one-pulse mode output. This gives up to 16 input captures/output compares/PWMs on the largest packages.

TIM2, TIM3, TIM4, TIM5 general-purpose timers can work together or with the TIM10, TIM11 and TIM9 general-purpose timers via the Timer Link feature for synchronization or event chaining. Their counter can be frozen in debug mode. Any of the general-purpose timers can be used to generate PWM outputs.

TIM2, TIM3, TIM4, TIM5 all have independent DMA request generation.

These timers are capable of handling quadrature (incremental) encoder signals and the digital outputs from 1 to 3 hall-effect sensors.

TIM10, TIM11 and TIM9

TIM10 and TIM11 are based on a 16-bit auto-reload upcounter. TIM9 is based on a 16-bit auto-reload up/down counter. They include a 16-bit prescaler. TIM10 and TIM11 feature one independent channel, whereas TIM9 has two independent channels for input capture/output compare, PWM or one-pulse mode output. They can be synchronized with the TIM2, TIM3, TIM4, TIM5 full-featured general-purpose timers.

They can also be used as simple time bases and be clocked by the LSE clock source (32.768 kHz) to provide time bases independent from the main CPU clock.

3.16.2 Basic timers (TIM6 and TIM7)

These timers are mainly used for DAC trigger generation. They can also be used as generic 16-bit time bases.

3.16.3 SysTick timer

This timer is dedicated to the OS, but could also be used as a standard downcounter. It is based on a 24-bit downcounter with autoreload capability and a programmable clock source. It features a maskable system interrupt generation when the counter reaches 0.

3.16.4 Independent watchdog (IWDG)

The independent watchdog is based on a 12-bit downcounter and 8-bit prescaler. It is clocked from an independent 37 kHz internal RC and, as it operates independently of the main clock, it can operate in Stop and Standby modes. It can be used either as a watchdog to reset the device when a problem occurs, or as a free-running timer for application timeout management. It is hardware- or software-configurable through the option bytes. The counter can be frozen in debug mode.

3.16.5 Window watchdog (WWDG)

The window watchdog is based on a 7-bit downcounter that can be set as free-running. It can be used as a watchdog to reset the device when a problem occurs. It is clocked from the main clock. It has an early warning interrupt capability and the counter can be frozen in debug mode.

3.17 Communication interfaces

3.17.1 I²C bus

Up to two I²C bus interfaces can operate in multimaster and slave modes. They can support standard and fast modes.

They support dual slave addressing (7-bit only) and both 7- and 10-bit addressing in master mode. A hardware CRC generation/verification is embedded.

They can be served by DMA and they support SM Bus 2.0/PM Bus.

3.17.2 Universal synchronous/asynchronous receiver transmitter (USART)

The three USART and two UART interfaces are able to communicate at speeds of up to 4 Mbit/s. They support IrDA SIR ENDEC and have LIN Master/Slave capability. The three USARTs provide hardware management of the CTS and RTS signals and are ISO 7816 compliant.

All USART/UART interfaces can be served by the DMA controller.

3.17.3 Serial peripheral interface (SPI)

Up to three SPIs are able to communicate at up to 16 Mbits/s in slave and master modes in full-duplex and half-duplex communication modes. The 3-bit prescaler gives 8 master mode frequencies and the frame is configurable to 8 bits or 16 bits. The hardware CRC generation/verification supports basic SD Card/MMC modes.

The SPIs can be served by the DMA controller.

3.17.4 Inter-integrated sound (I^2S)

Two standard I2S interfaces (multiplexed with SPI2 and SPI3) are available. They can operate in master or slave mode, and can be configured to operate with a 16-/32-bit resolution as input or output channels. Audio sampling frequencies from 8 kHz up to 192 kHz are supported. When either or both of the I2S interfaces is/are configured in master mode, the master clock can be output to the external DAC/CODEC at 256 times the sampling frequency.

The I2Ss can be served by the DMA controller.

3.17.5 Universal serial bus (USB)

The STM32L151xE and STM32L152xE devices embed a USB device peripheral compatible with the USB full-speed 12 Mbit/s. The USB interface implements a full-speed (12 Mbit/s) function interface. It has software-configurable endpoint setting and supports suspend/resume. The dedicated 48 MHz clock is generated from the internal main PLL (the clock source must use a HSE crystal oscillator).

3.18 CRC (cyclic redundancy check) calculation unit

The CRC (cyclic redundancy check) calculation unit is used to get a CRC code from a 32-bit data word and a fixed generator polynomial.

Among other applications, CRC-based techniques are used to verify data transmission or storage integrity. In the scope of the EN/IEC 60335-1 standard, they offer a means of verifying the Flash memory integrity. The CRC calculation unit helps compute a signature of the software during runtime, to be compared with a reference signature generated at link-time and stored at a given memory location.

3.19 Development support

3.19.1 Serial wire JTAG debug port (SWJ-DP)

The ARM SWJ-DP interface is embedded, and is a combined JTAG and serial wire debug port that enables either a serial wire debug or a JTAG probe to be connected to the target. The JTAG JTMS and JTCK pins are shared with SWDAT and SWCLK, respectively, and a specific sequence on the JTMS pin is used to switch between JTAG-DP and SW-DP.

The JTAG port can be permanently disabled with a JTAG fuse.

3.19.2 Embedded Trace Macrocell™

The ARM® Embedded Trace Macrocell provides a greater visibility of the instruction and data flow inside the CPU core by streaming compressed data at a very high rate from the STM32L151xE and STM32L152xE device through a small number of ETM pins to an external hardware trace port analyzer (TPA) device. The TPA is connected to a host computer using USB, Ethernet, or any other high-speed channel. Real-time instruction and data flow activity can be recorded and then formatted for display on the host computer running debugger software. TPA hardware is commercially available from common development tool vendors. It operates with third party debugger software tools.

4 Pin descriptions

Figure 3. STM32L15xZE LQFP144 pinout

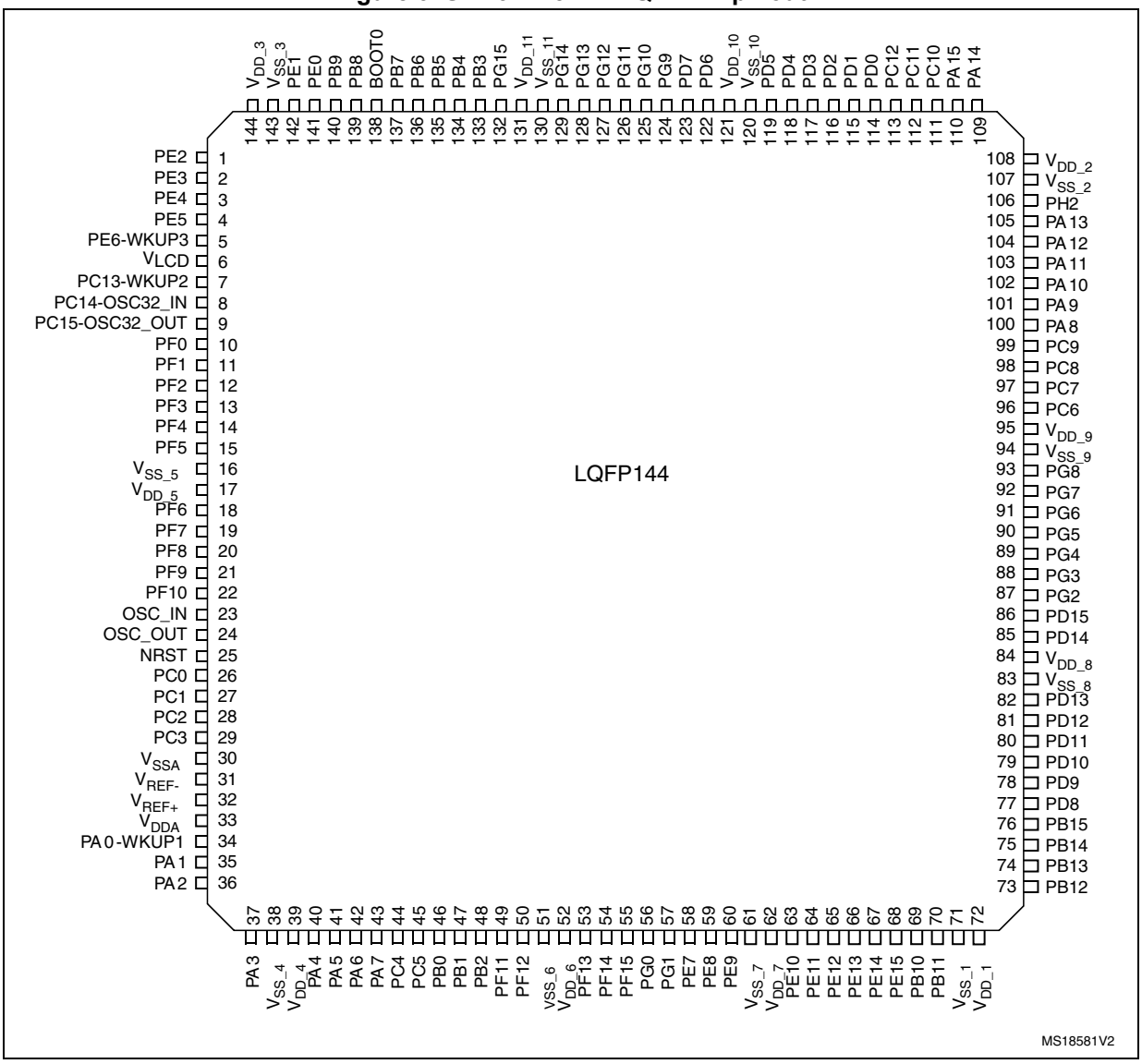

1. This figure shows the package top view.

Figure 4. STM32L15xQE UFBGA132 ballout

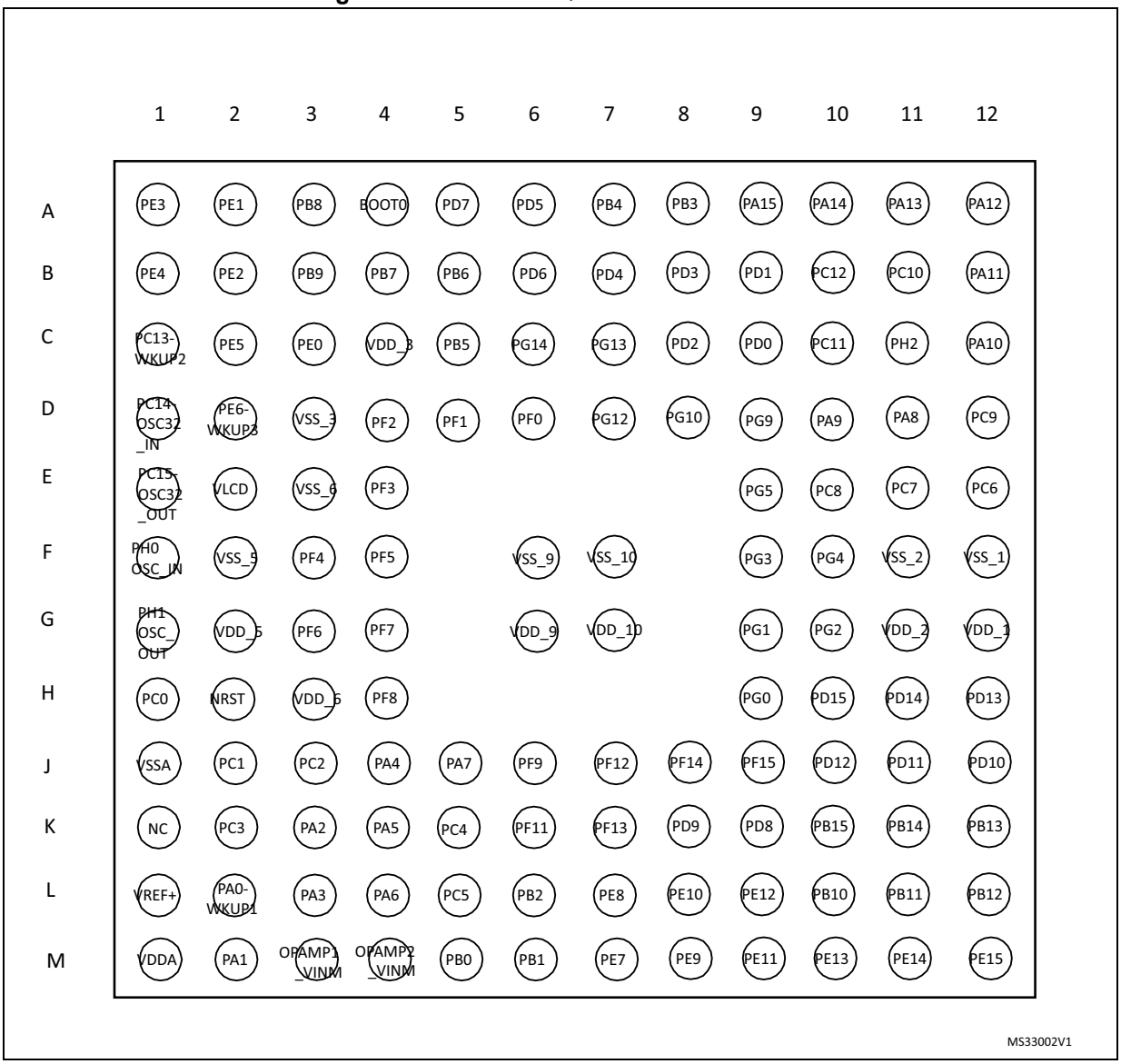

1. This figure shows the package top view.

Figure 5. STM32L15xVE LQFP100 pinout

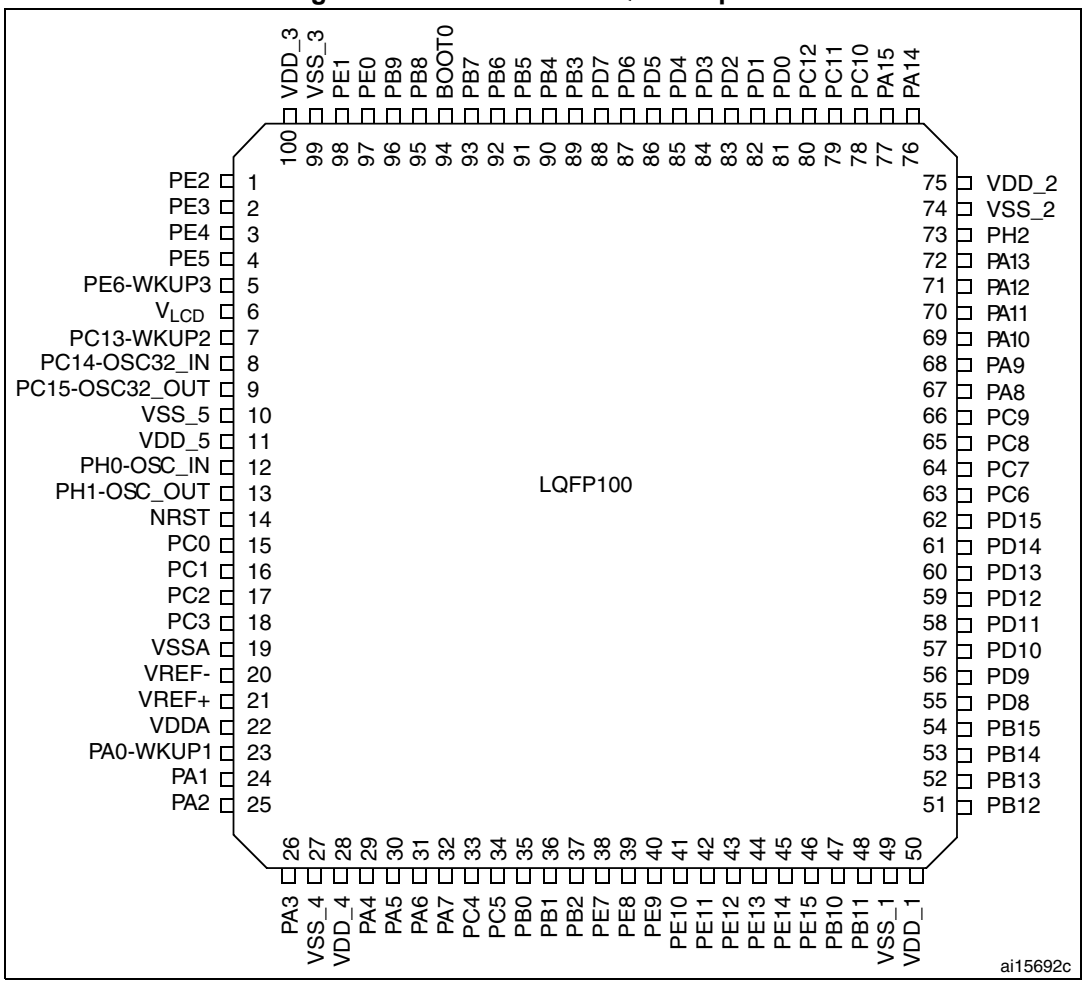

1. This figure shows the package top view.

Figure 6. STM32L15xRE LQFP64 pinout

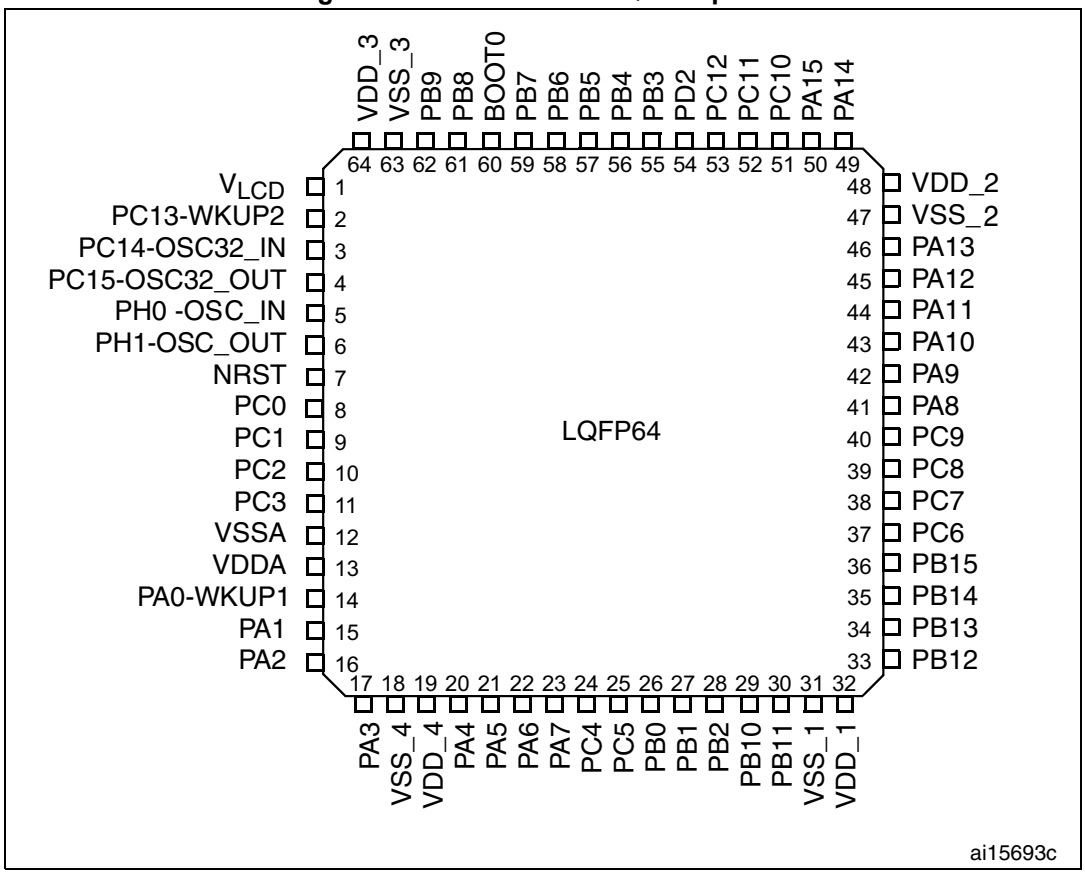

1. This figure shows the package top view.

Figure 7. STM32L15xVEY WLCSP104 ballout

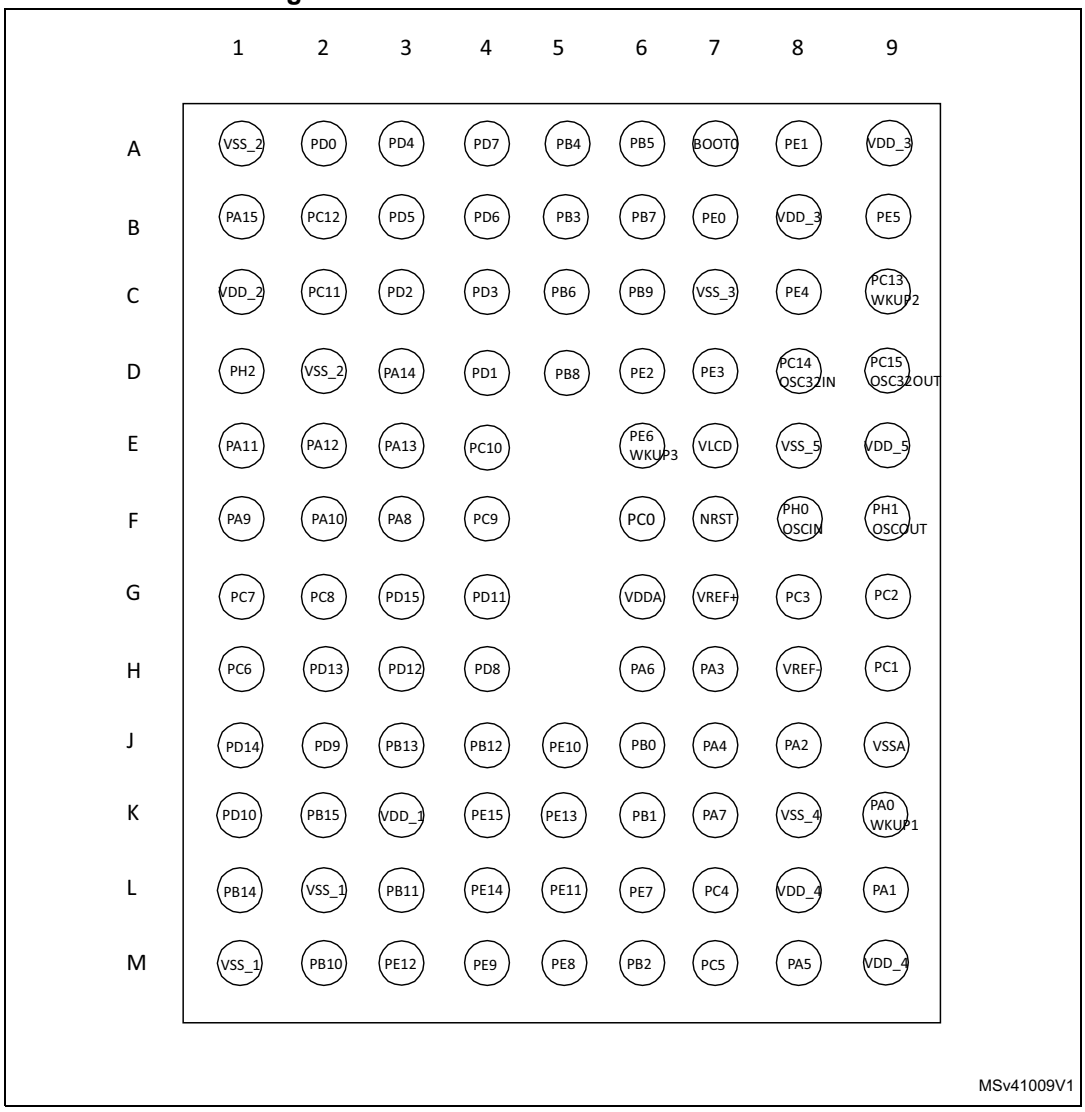

1. This figure shows the package top view.

Table 7. Legend/abbreviations used in the pinout table

Name		Abbreviation	Definition
Pin name		Unless otherwise specified in brackets below the pin name, the pin function during and after reset is the same as the actual pin name	
Pin type		S	Supply pin
		I	Input only pin
		I/O	Input / output pin
I/O structure		FT	5 V tolerant I/O
		TC	Standard 3.3 V I/O
		B	Dedicated BOOT0 pin
		RST	Bidirectional reset pin with embedded weak pull-up resistor
Notes		Unless otherwise specified by a note, all I/Os are set as floating inputs during and after reset	
Pin functions	Alternate functions	Functions selected through GPIOx_AFR registers	
	Additional functions	Functions directly selected/enabled through peripheral registers	

Table 8. STM32L151xE and STM32L152xE pin definitions

Pins					Pin name	Pin Type(1)	I / O structure	Main function(2) (after reset)	Pin functions	
LQFP144	UFBGA132	LQFP100	LQFP64	WLCSP104					Alternate functions	Additional functions
1	B2	1	-	D6	PE2	I/O	FT	PE2	TIM3_ETR/LCD_SEG38/ TRACECLK	-
2	A1	2	-	D7	PE3	I/O	FT	PE3	TIM3_CH1/LCD_SEG39/ TRACED0	-
3	B1	3	-	C8	PE4	I/O	FT	PE4	TIM3_CH2/TRACED1	-
4	C2	4	-	B9	PE5	I/O	FT	PE5	TIM9_CH1/TRACED2	-
5	D2	5	-	E6	PE6-WKUP3	I/O	FT	PE6	TIM9_CH2/TRACED3	WKUP3/ RTC_TAMP3
6	E2	6	1	E7	V_{LCD}(3)	S	-	V_{LCD}	-	-
7	C1	7	2	C9	PC13-WKUP2	I/O	FT	PC13	-	WKUP2/RTC_TAMP1/RTC_TS/ RTC_OUT

Table 8. STM32L151xE and STM32L152xE pin definitions (continued)

Pins					Pin name	Pin Type(1)	I / O structure	Main function(2) (after reset)	Pin functions	
LQFP144	UFBGA132	LQFP100	LQFP64	WLCSP104					Alternate functions	Additional functions
8	D1	8	3	D8	PC14-OSC32_IN(4)	I/O	TC	PC14	-	OSC32_IN
9	E1	9	4	D9	PC15-OSC32_OUT	I/O	TC	PC15	-	OSC32_OUT
10	D6	-	-	-	PF0	I/O	FT	PF0	-	-
11	D5	-	-	-	PF1	I/O	FT	PF1	-	-
12	D4	-	-	-	PF2	I/O	FT	PF2	-	-
13	E4	-	-	-	PF3	I/O	FT	PF3	-	-
14	F3	-	-	-	PF4	I/O	FT	PF4	-	-
15	F4	-	-	-	PF5	I/O	FT	PF5	-	-
16	F2	10	-	E8	V_{SS_5}	S		V_{SS_5}	-	-
17	G2	11	-	E9	V_{DD_5}	S		V_{DD_5}	-	-
18	G3	-	-	-	PF6	I/O	FT	PF6	TIM5_CH1/TIM5_ETR	ADC_IN27
19	G4	-	-	-	PF7	I/O	FT	PF7	TIM5_CH2	ADC_IN28/ COMP1_INP
20	H4	-	-	-	PF8	I/O	FT	PF8	TIM5_CH3	ADC_IN29/ COMP1_INP
21	J6	-	-	-	PF9	I/O	FT	PF9	TIM5_CH4	ADC_IN30/ COMP1_INP
22	-	-	-	-	PF10	I/O	FT	PF10	-	ADC_IN31/ COMP1_INP
23	F1	12	5	F8	PH0-OSC_IN(5)	I/O	TC	PH0	-	OSC_IN
24	G1	13	6	F9	PH1-OSC_OUT(5)	I/O	TC	PH1	-	OSC_OUT
25	H2	14	7	F7	NRST	I/O	RST	NRST	-	-
26	H1	15	8	F6	PC0	I/O	FT	PC0	LCD_SEG18	ADC_IN10/ COMP1_INP
27	J2	16	9	H9	PC1	I/O	FT	PC1	LCD_SEG19	ADC_IN11/ COMP1_INP
28	-	17	10	G9	PC2	I/O	FT	PC2	LCD_SEG20	ADC_IN12/ COMP1_INP

Table 8. STM32L151xE and STM32L152xE pin definitions (continued)

Pins					Pin name	Pin Type(1)	I / O structure	Main function(2) (after reset)	Pin functions	
LQFP144	UFBGA132	LQFP100	LQFP64	WLCSP104					Alternate functions	Additional functions
-	J3	-	-	-	PC2	I/O	FT	PC2	LCD_SEG20	ADC_IN12/ COMP1_INP
-	K1	-	-	-	NC	I		NC	-	-
29	K2	18	11	G8	PC3	I/O	TC	PC3	LCD_SEG21	ADC_IN13/ COMP1_INP
30	J1	19	12	J9	V_{SSA}	S	-	V_{SSA}	-	-
31	-	20	-	H8	V_{REF-}	S	-	V_{REF-}	-	-
32	L1	21	-	G7	V_{REF+}	S	-	V_{REF+}	-	-
33	M1	22	13	G6	V_{DDA}	S	-	V_{DDA}	-	-
34	L2	23	14	K9	PA0-WKUP1	I/O	FT	PA0	TIM2_CH1_ETR/ TIM5_CH1/ USART2_CTS	WKUP1/RTC_TAMP2/ADC_IN0/ COMP1_INP
35	M2	24	15	L9	PA1	I/O	FT	PA1	TIM2_CH2/TIM5_CH2/ USART2_RTS/ LCD_SEG0	ADC_IN1/ COMP1_INP/ OPAMP1_VINP
36	-	25	16	J8	PA2	I/O	FT	PA2	TIM2_CH3/TIM5_CH3/ TIM9_CH1/ USART2_TX/LCD_SEG1	ADC_IN2/ COMP1_INP/ OPAMP1_VINM
-	K3	-	-	-	PA2	I/O	FT	PA2	TIM2_CH3/TIM5_CH3/ TIM9_CH1/ USART2_TX/LCD_SEG1	ADC_IN2/ COMP1_INP
-	M3	-	-		OPAMP1_VINM	I	TC	OPAMP1_ VINM	-	-
37	L3	26	17	H7	PA3	I/O	TC	PA3	TIM2_CH4/TIM5_CH4/ TIM9_CH2/ USART2_RX/LCD_SEG2	ADC_IN3/ COMP1_INP/ OPAMP1_VOUT
38	-	27	18	K8	V_{SS_4}	S	-	V_{SS_4}	-	-
39	-	28	19	L8, M9	V_{DD_4}	S	-	V_{DD_4}	-	-
40	J4	29	20	J7	PA4	I/O	TC	PA4	SPI1_NSS/SPI3_NSS/ I2S3_WS/ USART2_CK	ADC_IN4/ DAC_OUT1/ COMP1_INP

Table 8. STM32L151xE and STM32L152xE pin definitions (continued)

Pins					Pin name	Pin Type(1)	I / O structure	Main function(2) (after reset)	Pin functions	
LQFP144	UFBGA132	LQFP100	LQFP64	WLCSP104					Alternate functions	Additional functions
41	K4	30	21	M8	PA5	I/O	TC	PA5	TIM2_CH1_ETR/ SPI1_SCK	ADC_IN5/ DAC_OUT2/ COMP1_INP
42	L4	31	22	H6	PA6	I/O	FT	PA6	TIM3_CH1/TIM10_CH1/S PI1_MISO/ LCD_SEG3	ADC_IN6/ COMP1_INP/ OPAMP2_VINP
43	-	32	23	K7	PA7	I/O	FT	PA7	TIM3_CH2/TIM11_CH1/ SPI1_MOSI/ LCD_SEG4	ADC_IN7/ COMP1_INP/ OPAMP2_VINM
-	J5	-	-	-	PA7	I/O	FT	PA7	TIM3_CH2/TIM11_CH1/ SPI1_MOSI/ LCD_SEG4	ADC_IN7/ COMP1_INP
-	M4	-	-	-	OPAMP2_VINM	I	TC	OPAMP2_ VINM	-	-
44	K5	33	24	L7	PC4	I/O	FT	PC4	LCD_SEG22	ADC_IN14/ COMP1_INP
45	L5	34	25	M7	PC5	I/O	FT	PC5	LCD_SEG23	ADC_IN15/ COMP1_INP
46	M5	35	26	J6	PB0	I/O	TC	PB0	TIM3_CH3/LCD_SEG5	ADC_IN8/ COMP1_INP/ OPAMP2_VOUT/ VREF_OUT
47	M6	36	27	K6	PB1	I/O	FT	PB1	TIM3_CH4/LCD_SEG6	ADC_IN9/ COMP1_INP/ VREF_OUT
48	L6	37	28	M6	PB2	I/O	FT	PB2/ BOOT1	BOOT1	ADC_IN0b
49	K6	-	-	-	PF11	I/O	FT	PF11	-	ADC_IN1b
50	J7	-	-	-	PF12	I/O	FT	PF12	-	ADC_IN2b
51	E3	-	-	-	V_{SS_6}	S		V_{SS_6}	-	-
52	H3	-	-	-	V_{DD_6}	S		V_{DD_6}	-	-
53	K7	-	-	-	PF13	I/O	FT	PF13	-	ADC_IN3b
54	J8	-	-	-	PF14	I/O	FT	PF14	-	ADC_IN6b
55	J9	-	-	-	PF15	I/O	FT	PF15	-	ADC_IN7b

Table 8. STM32L151xE and STM32L152xE pin definitions (continued)

Pins					Pin name	Pin Type(1)	I / O structure	Main function(2) (after reset)	Pin functions	
LQFP144	UFBGA132	LQFP100	LQFP64	WLCSP104					Alternate functions	Additional functions
56	H9	-	-	-	PG0	I/O	FT	PG0	-	ADC_IN8b
57	G9	-	-	-	PG1	I/O	FT	PG1	-	ADC_IN9b
58	M7	38	-	L6	PE7	I/O	TC	PE7	-	ADC_IN22/ COMP1_INP
59	L7	39	-	M5	PE8	I/O	TC	PE8	-	ADC_IN23/ COMP1_INP
60	M8	40	-	M4	PE9	I/O	TC	PE9	TIM2_CH1_ETR	ADC_IN24/ COMP1_INP
61	-	-	-	-	V_{SS_7}	S	-	V_{SS_7}	-	-
62	-	-	-	-	V_{DD_7}	S	-	V_{DD_7}	-	-
63	L8	41	-	J5	PE10	I/O	TC	PE10	TIM2_CH2	ADC_IN25/ COMP1_INP
64	M9	42	-	L5	PE11	I/O	FT	PE11	TIM2_CH3	-
65	L9	43	-	M3	PE12	I/O	FT	PE12	TIM2_CH4/SPI1_NSS	-
66	M10	44	-	K5	PE13	I/O	FT	PE13	SPI1_SCK	-
67	M11	45	-	L4	PE14	I/O	FT	PE14	SPI1_MISO	-
68	M12	46	-	K4	PE15	I/O	FT	PE15	SPI1_MOSI	-
69	L10	47	29	M2	PB10	I/O	FT	PB10	TIM2_CH3/I2C2_SCL/ USART3_TX/ LCD_SEG10	-
70	L11	48	30	L3	PB11	I/O	FT	PB11	TIM2_CH4/I2C2_SDA/ USART3_RX/ LCD_SEG11	-
71	F12	49	31	L2, M1	V_{SS_1}	S	-	V_{SS_1}	-	-
72	G12	50	32	K3	V_{DD_1}	S	-	V_{DD_1}	-	-
73	L12	51	33	J4	PB12	I/O	FT	PB12	TIM10_CH1/I2C2_SMBA/ SPI2_NSS/I2S2_WS/ USART3_CK/ LCD_SEG12	ADC_IN18/ COMP1_INP

Table 8. STM32L151xE and STM32L152xE pin definitions (continued)

Pins					Pin name	Pin Type(1)	I / O structure	Main function(2) (after reset)	Pin functions	
LQFP144	UFBGA132	LQFP100	LQFP64	WLCSP104					Alternate functions	Additional functions
74	K12	52	34	J3	PB13	I/O	FT	PB13	TIM9_CH1/SPI2_SCK/ I2S2_CK/ USART3_CTS/ LCD_SEG13	ADC_IN19/ COMP1_INP
75	K11	53	35	L1	PB14	I/O	FT	PB14	TIM9_CH2/SPI2_MISO/ USART3_RTS/ LCD_SEG14	ADC_IN20/ COMP1_INP
76	K10	54	36	K2	PB15	I/O	FT	PB15	TIM11_CH1/SPI2_MOSI/ I2S2_SD/ LCD_SEG15	ADC_IN21/ COMP1_INP/ RTC_REFIN
77	K9	55	-	H4	PD8	I/O	FT	PD8	USART3_TX/ LCD_SEG28	-
78	K8	56	-	J2	PD9	I/O	FT	PD9	USART3_RX/ LCD_SEG29	-
79	J12	57	-	K1	PD10	I/O	FT	PD10	USART3_CK/ LCD_SEG30	-
80	J11	58	-	G4	PD11	I/O	FT	PD11	USART3_CTS/ LCD_SEG31	-
81	J10	59	-	H3	PD12	I/O	FT	PD12	TIM4_CH1/ USART3_RTS/ LCD_SEG32	-
82	H12	60	-	H2	PD13	I/O	FT	PD13	TIM4_CH2/LCD_SEG33	-
83	-	-	-	-	V_{SS_8}	S	-	V_{SS_8}	-	-
84	-	-	-	-	V_{DD_8}	S	-	V_{DD_8}	-	-
85	H11	61	-	J1	PD14	I/O	FT	PD14	TIM4_CH3/LCD_SEG34	-
86	H10	62	-	G3	PD15	I/O	FT	PD15	TIM4_CH4/LCD_SEG35	-
87	G10	-	-	-	PG2	I/O	FT	PG2	-	ADC_IN10b
88	F9	-	-	-	PG3	I/O	FT	PG3	-	ADC_IN11b
89	F10	-	-	-	PG4	I/O	FT	PG4	-	ADC_IN12b
90	E9	-	-	-	PG5	I/O	FT	PG5	-	-
91	-	-	-	-	PG6	I/O	FT	PG6	-	-
92	-	-	-	-	PG7	I/O	FT	PG7	-	-
93	-	-	-	-	PG8	I/O	FT	PG8	-	-

Table 8. STM32L151xE and STM32L152xE pin definitions (continued)

Pins					Pin name	Pin Type(1)	I / O structure	Main function(2) (after reset)	Pin functions	
LQFP144	UFBGA132	LQFP100	LQFP64	WLCSP104					Alternate functions	Additional functions
94	F6	-	-	-	V_{SS_9}	S	-	V_{SS_9}	-	-
95	G6	-	-	-	V_{DD_9}	S	-	V_{DD_9}	-	-
96	E12	63	37	H1	PC6	I/O	FT	PC6	TIM3_CH1/I2S2_MCK/ LCD_SEG24	-
97	E11	64	38	G1	PC7	I/O	FT	PC7	TIM3_CH2/I2S3_MCK/ LCD_SEG25	-
98	E10	65	39	G2	PC8	I/O	FT	PC8	TIM3_CH3/LCD_SEG26	-
99	D12	66	40	F4	PC9	I/O	FT	PC9	TIM3_CH4/LCD_SEG27	-
100	D11	67	41	F3	PA8	I/O	FT	PA8	USART1_CK/MCO/ LCD_COM0	-
101	D10	68	42	F1	PA9	I/O	FT	PA9	USART1_TX / LCD_COM1	-
102	C12	69	43	F2	PA10	I/O	FT	PA10	USART1_RX / LCD_COM2	-
103	B12	70	44	E1	PA11	I/O	FT	PA11	USART1_CTS/ SPI1_MISO	USB_DM
104	A12	71	45	E2	PA12	I/O	FT	PA12	USART1_RTS/ SPI1_MOSI	USB_DP
105	A11	72	46	E3	PA13	I/O	FT	JTMS-SWDIO	JTMS-SWDIO	-
106	C11	73	-	D1	PH2	I/O	FT	PH2	-	-
107	F11	74	47	D2, A1	V_{SS_2}	S	-	V_{SS_2}	-	-
108	G11	75	48	C1	V_{DD_2}	S	-	V_{DD_2}	-	-
109	A10	76	49	D3	PA14	I/O	FT	JTCK-SWCLK	JTCK-SWCLK	-
110	A9	77	50	B1	PA15	I/O	FT	JTDI	TIM2_CH1_ETR/ SPI1_NSS/SPI3_NSS/ I2S3_WS/LCD_SEG17/ JTDI	-
111	B11	78	51	E4	PC10	I/O	FT	PC10	SPI3_SCK/I2S3_CK/ USART3_TX/ UART4_TX/ LCD_SEG28/ LCD_SEG40/LCD_COM4	-

Table 8. STM32L151xE and STM32L152xE pin definitions (continued)

Pins					Pin name	Pin Type(1)	I / O structure	Main function(2) (after reset)	Pin functions	
LQFP144	UFBGA132	LQFP100	LQFP64	WLCSP104					Alternate functions	Additional functions
112	C10	79	52	C2	PC11	I/O	FT	PC11	SPI3_MISO/USART3_RX/ UART4_RX/ LCD_SEG29/ LCD_SEG41/LCD_COM5	-
113	B10	80	53	B2	PC12	I/O	FT	PC12	SPI3_MOSI/I2S3_SD/ USART3_CK/ UART5_TX/LCD_SEG30/ LCD_SEG42/ LCD_COM6	-
114	C9	81	-	A2	PD0	I/O	FT	PD0	TIM9_CH1/SPI2_NSS/ I2S2_WS	-
115	B9	82	-	D4	PD1	I/O	FT	PD1	SPI2_SCK/I2S2_CK	-
116	C8	83	54	C3	PD2	I/O	FT	PD2	TIM3_ETR/UART5_RX/ LCD_SEG31/ LCD_SEG43/LCD_COM7	-
117	B8	84	-	C4	PD3	I/O	FT	PD3	SPI2_MISO/ USART2_CTS	-
118	B7	85	-	A3	PD4	I/O	FT	PD4	SPI2_MOSI/I2S2_SD/ USART2_RTS	-
119	A6	86	-	B3	PD5	I/O	FT	PD5	USART2_TX	-
120	F7	-	-	-	V_{SS_10}	S	-	V_{SS_10}	-	-
121	G7	-	-	-	V_{DD_10}	S	-	V_{DD_10}	-	-
122	B6	87	-	B4	PD6	I/O	FT	PD6	USART2_RX	-
123	A5	88	-	A4	PD7	I/O	FT	PD7	TIM9_CH2/USART2_CK	-
124	D9	-	-	-	PG9	I/O	FT	PG9	-	-
125	D8	-	-	-	PG10	I/O	FT	PG10	-	-
126	-	-	-	-	PG11	I/O	FT	PG11	-	-
127	D7	-	-	-	PG12	I/O	FT	PG12	-	-
128	C7	-	-	-	PG13	I/O	FT	PG13	-	-
129	C6	-	-	-	PG14	I/O	FT	PG14	-	-
130	-	-	-	-	V_{SS_11}	S	-	V_{SS_11}	-	-
131	-	-	-	-	V_{DD_11}	S	-	V_{DD_11}	-	-

Table 8. STM32L151xE and STM32L152xE pin definitions (continued)

Pins					Pin name	Pin Type(1)	I / O structure	Main function(2) (after reset)	Pin functions	
LQFP144	UFBGA132	LQFP100	LQFP64	WLCSP104					Alternate functions	Additional functions
132	-	-	-	-	PG15	I/O	FT	PG15	-	-
133	A8	89	55	B5	PB3	I/O	FT	JTDO	TIM2_CH2/SPI1_SCK/ SPI3_SCK/ I2S3_CK/ LCD_SEG7/JTDO	COMP2_INM
134	A7	90	56	A5	PB4	I/O	FT	NJTRST	TIM3_CH1/SPI1_MISO/ SPI3_MISO/ LCD_SEG8/NJTRST	COMP2_INP
135	C5	91	57	A6	PB5	I/O	FT	PB5	TIM3_CH2/I2C1_SMBA/ SPI1_MOSI/ SPI3_MOSI/I2S3_SD/ LCD_SEG9	COMP2_INP
136	B5	92	58	C5	PB6	I/O	FT	PB6	TIM4_CH1/I2C1_SCL/ USART1_TX	COMP2_INP
137	B4	93	59	B6	PB7	I/O	FT	PB7	TIM4_CH2/I2C1_SDA/ USART1_RX	COMP2_INP/ PVD_IN
138	A4	94	60	A7	BOOT0	I	B	BOOT0	-	-
139	A3	95	61	D5	PB8	I/O	FT	PB8	TIM4_CH3/TIM10_CH1/ I2C1_SCL/ LCD_SEG16	-
140	B3	96	62	C6	PB9	I/O	FT	PB9	TIM4_CH4/ TIM11_CH1/I2C1_SDA/ LCD_COM3	-
141	C3	97	-	B7	PE0	I/O	FT	PE0	TIM4_ETR/TIM10_CH1/ LCD_SEG36	-
142	A2	98	-	A8	PE1	I/O	FT	PE1	TIM11_CH1/LCD_SEG37	-
143	D3	99	63	C7	V_{SS_3}	S	-	V_{SS_3}	-	-
144	C4	100	64	B8, A9	V_{DD_3}	S	-	V_{DD_3}	-	-

1. I = input, O = output, S = supply.
2. Function availability depends on the chosen device.
3. Applicable to STM32L152xE devices only. In STM32L151xE devices, this pin should be connected to V_{DD}.
4. The PC14 and PC15 I/Os are only configured as OSC32_IN/OSC32_OUT when the LSE oscillator is ON (by setting the LSEON bit in the RCC_CSR register). The LSE oscillator pins OSC32_IN/OSC32_OUT can be used as general-purpose PH0/PH1 I/Os, respectively, when the LSE oscillator is off (after reset, the LSE oscillator is off). The LSE has priority over the GPIO function. For more details, refer to Using the OSC32_IN/OSC32_OUT pins as GPIO PC14/PC15 port pins section in the STM32L151xx, STM32L152xx and STM32L162xx reference manual (RM0038).

5. The PH0 and PH1 I/Os are only configured as OSC_IN/OSC_OUT when the HSE oscillator is ON (by setting the HSEON bit in the RCC_CR register). The HSE oscillator pins OSC_IN/OSC_OUT can be used as general-purpose PH0/PH1 I/Os, respectively, when the HSE oscillator is off (after reset, the HSE oscillator is off). The HSE has priority over the GPIO function.

Alternate functions

Table 9. Alternate function input/output

Port name	Digital alternate function number													
	AFIO0	AFIO1	AFIO2	AFIO3	AFIO4	AFIO5	AFIO6	AFIO7	AFIO8	..	AFIO11	..	AFIO14	AFIO15
	Alternate function													
	SYSTEM	TIM2	TIM3/4/5	TIM9/10/11	I2C1/2	SPI1/2	SPI3	USART1/2/3	UART4/5	-	LCD	-	CPRI	SYSTEM
BOOT0	BOOT0	-	-	-	-	-	-	-	-	-	-	-	-	EVENT OUT
NRST	NRST	-	-	-	-	-	-	-	-	-	-	-	-	-
PA0-WKUP1	-	TIM2_CH1_ETR	TIM5_CH1	-	-	-	-	USART2_CTS	-	-	-	-	TIMx_IC1	EVENT OUT
PA1	-	TIM2_CH2	TIM5_CH2	-	-	-	-	USART2_RTS	-	-	SEG0	-	TIMx_IC2	EVENT OUT
PA2	-	TIM2_CH3	TIM5_CH3	TIM9_CH1	-	-	-	USART2_TX	-	-	SEG1	-	TIMx_IC3	EVENT OUT
PA3	-	TIM2_CH4	TIM5_CH4	TIM9_CH2	-	-	-	USART2_RX	-	-	SEG2	-	TIMx_IC4	EVENT OUT
PA4	-	-	-	-	-	SPI1_NSS	SPI3_NSS I2S3_WS	USART2_CK	-	-	-	-	TIMx_IC1	EVENT OUT
PA5	-	TIM2_CH1_ETR	-	-	-	SPI1_SCK	-	-	-	-	-	-	TIMx_IC2	EVENT OUT
PA6	-	-	TIM3_CH1	TIM10_CH1	-	SPI1_MISO	-	-	-	-	SEG3	-	TIMx_IC3	EVENT OUT
PA7	-	-	TIM3_CH2	TIM11_CH1	-	SPI1_MOSI	-	-	-	-	SEG4	-	TIMx_IC4	EVENT OUT
PA8	MCO	-	-	-	-	-	-	USART1_CK	-	-	COM0	-	TIMx_IC1	EVENT OUT
PA9	-	-	-	-	-	-	-	USART1_TX	-	-	COM1	-	TIMx_IC2	EVENT OUT
PA10	-	-	-	-	-	-	-	USART1_RX	-	-	COM2	-	TIMx_IC3	EVENT OUT

Table 9. Alternate function input/output (continued)

Port name	Digital alternate function number													
	AFIO0	AFIO1	AFIO2	AFIO3	AFIO4	AFIO5	AFIO6	AFIO7	AFIO8	..	AFIO11	..	AFIO14	AFIO15
	Alternate function													
	SYSTEM	TIM2	TIM3/4/5	TIM9/10/11	I2C1/2	SPI1/2	SPI3	USART1/2/3	UART4/5	-	LCD	-	CPRI	SYSTEM
PA11	-	-	-	-	-	SPI1_MISO	-	USART1_CTS	-	-	-	-	TIMx_IC4	EVENT OUT
PA12	-	-	-	-	-	SPI1_MOSI	-	USART1_RTS	-	-	-	-	TIMx_IC1	EVENT OUT
PA13	JTMS-SWDIO	-	-	-	-	-	-	-	-	-	-	-	TIMx_IC2	EVENT OUT
PA14	JTCK-SWCLK	-	-	-	-	-	-	-	-	-	-	-	TIMx_IC3	EVEN TOUT
PA15	JTDI	TIM2_CH1_ETR	-	-	-	SPI1_NSS	SPI3_NSS I2S3_WS	-	-	-	SEG17	-	TIMx_IC4	EVEN TOUT
PB0	-	-	TIM3_CH3	-	-	-	-	-	-	-	SEG5	-	-	EVEN TOUT
PB1	-	-	TIM3_CH4	-	-	-	-	-	-	-	SEG6	-	-	EVENT OUT
PB2	BOOT1	-	-	-	-	-	-	-	-	-	-	-	-	EVENT OUT
PB3	JTDO	TIM2_CH2	-	-	-	SPI1_SCK	SPI3_SCK I2S3_CK	-	-	-	SEG7	-	-	EVENT OUT
PB4	NJTRST	-	TIM3_CH1	-	-	SPI1_MISO	SPI3_MISO	-	-	-	SEG8	-	-	EVENT OUT
PB5	-	-	TIM3_CH2	-	I2C1_SMBA	SPI1_MOSI	SPI3_MOSI I2S3_SD	-	-	-	SEG9	-	-	EVENT OUT
PB6	-	-	TIM4_CH1	-	I2C1_SCL	-	-	USART1_TX	-	-	-	-	-	EVENT OUT
PB7	-	-	TIM4_CH2	-	I2C1_SDA	-	-	USART1_RX	-	-	-	-		EVENT OUT
PB8	-	-	TIM4_CH3	TIM10_CH1	I2C1_SCL	-	-	-	-	-	SEG16	-	-	EVENT OUT

Table 9. Alternate function input/output (continued)

Port name	Digital alternate function number													
	AFIO0	AFIO1	AFIO2	AFIO3	AFIO4	AFIO5	AFIO6	AFIO7	AFIO8	..	AFIO11	..	AFIO14	AFIO15
	Alternate function													
	SYSTEM	TIM2	TIM3/4/5	TIM9/10/11	I2C1/2	SPI1/2	SPI3	USART1/2/3	UART4/5	-	LCD	-	CPRI	SYSTEM
PB9	-	-	TIM4_CH4	TIM11_CH1	I2C1_SDA	-	-	-	-	-	COM3	-	-	EVENT OUT
PB10	-	TIM2_CH3	-	-	I2C2_SCL	-	-	USART3_TX	-	-	SEG10	-	-	EVENT OUT
PB11	-	TIM2_CH4	-	-	I2C2_SDA	-	-	USART3_RX	-	-	SEG11	-	-	EVENT OUT
PB12	-	-	-	TIM10_CH1	I2C2_SMBA	SPI2_NSS I2S2_WS	-	USART3_CK	-	-	SEG12	-	-	EVENT OUT
PB13	-	-	-	TIM9_CH1	-	SPI2_SCK I2S2_CK	-	USART3_CTS	-	-	SEG13	-	-	EVENT OUT
PB14	-	-	-	TIM9_CH2	-	SPI2_MISO	-	USART3_RTS	-	-	SEG14	-	-	EVENT OUT
PB15	-	-	-	TIM11_CH1	-	SPI2_MOSI I2S2_SD	-	-	-	-	SEG15	-	-	EVENT OUT
PC0	-	-	-	-	-	-	-	-	-	-	SEG18	-	TIMx_IC1	EVENT OUT
PC1	-	-	-	-	-	-	-	-	-	-	SEG19	-	TIMx_IC2	EVENT OUT
PC2	-	-	-	-	-	-	-	-	-	-	SEG20	-	TIMx_IC3	EVENT OUT
PC3	-	-	-	-	-	-	-	-	-	-	SEG21	-	TIMx_IC4	EVENT OUT
PC4	-	-	-	-	-	-	-	-	-	-	SEG22	-	TIMx_IC1	EVENT OUT
PC5	-	-	-	-	-	-	-	-	-	-	SEG23	-	TIMx_IC2	EVENT OUT
PC6	-	-	TIM3_CH1	-	-	I2S2_MCK	-	-	-	-	SEG24	-	TIMx_IC3	EVENT OUT

Table 9. Alternate function input/output (continued)

Port name	Digital alternate function number													
	AFIO0	AFIO1	AFIO2	AFIO3	AFIO4	AFIO5	AFIO6	AFIO7	AFIO8	..	AFIO11	..	AFIO14	AFIO15
	Alternate function													
	SYSTEM	TIM2	TIM3/4/5	TIM9/10/11	I2C1/2	SPI1/2	SPI3	USART1/2/3	UART4/5	-	LCD	-	CPRI	SYSTEM
PC7	-	-	TIM3_CH2	-	-	-	I2S3_MCK	-	-	-	SEG25	-	TIMx_IC4	EVENT OUT
PC8	-	-	TIM3_CH3	-	-	-	-	-	-	-	SEG26	-	TIMx_IC1	EVENT OUT
PC9	-	-	TIM3_CH4	-	-	-	-	-	-	-	SEG27	-	TIMx_IC2	EVENT OUT
PC10	-	-	-	-	-	-	SPI3_SCK I2S3_CK	USART3_TX	UART4_TX	-	COM4/ SEG28/ SEG40	-	TIMx_IC3	EVENT OUT
PC11	-	-	-	-	-	-	SPI3_MISO	USART3_RX	UART4_RX	-	COM5/ SEG29 /SEG41	-	TIMx_IC4	EVENT OUT
PC12	-	-	-	-	-	-	SPI3_MOSI I2S3_SD	USART3_CK	UART5_TX	-	COM6/ SEG30/ SEG42	-	TIMx_IC1	EVENT OUT
PC13-WKUP2	-	-	-	-	-	-	-	-	-	-	-	-	TIMx_IC2	EVENT OUT
PC14 OSC32_IN	-	-	-	-	-	-	-	-	-	-	-	-	TIMx_IC3	EVENT OUT
PC15 OSC32_OUT	-	-	-	-	-	-	-	-	-	-	-	-	TIMx_IC4	EVENT OUT
PD0	-	-	-	TIM9_CH1	-	SPI2_NSS I2S2_WS	-	-	-	-	-	-	TIMx_IC1	EVENT OUT
PD1	-	-	-	-	-	SPI2 SCK I2S2_CK	-	-	-	-	-	-	TIMx_IC2	EVENT OUT
PD2	-	-	TIM3_ETR	-	-	-	-	-	UART5_RX	-	COM7/ SEG31/ SEG43	-	TIMx_IC3	EVENT OUT
PD3	-	-	-	-	-	SPI2_MISO	-	USART2_CTS	-	-	-	-	TIMx_IC4	EVENT OUT

Table 9. Alternate function input/output (continued)

Port name	Digital alternate function number													
	AFIO0	AFIO1	AFIO2	AFIO3	AFIO4	AFIO5	AFIO6	AFIO7	AFIO8	. .	AFIO11	. .	AFIO14	AFIO15
	Alternate function													
	SYSTEM	TIM2	TIM3/4/5	TIM9/10/11	I2C1/2	SPI1/2	SPI3	USART1/2/3	UART4/5	-	LCD	-	CPRI	SYSTEM
PD4	-	-	-	-	-	SPI2_MOSI I2S2_SD	-	USART2_RTS	-	-	-	-	TIMx_IC1	EVENT OUT
PD5	-	-	-	-	-	-	-	USART2_TX	-	-	-	-	TIMx_IC2	EVENT OUT
PD6	-	-	-	-	-	-	-	USART2_RX	-	-	-	-	TIMx_IC3	EVENT OUT
PD7	-	-	-	TIM9_CH2	-	-	-	USART2_CK	-	-	-	-	TIMx_IC4	EVENT OUT
PD8	-	-	-	-	-	-	-	USART3_TX	-	-	SEG28	-	TIMx_IC1	EVENT OUT
PD9	-	-	-	-	-	-	-	USART3_RX	-	-	SEG29	-	TIMx_IC2	EVENT OUT
PD10	-	-	-	-	-	-	-	USART3_CK	-	-	SEG30	-	TIMx_IC3	EVENT OUT
PD11	-	-	-	-	-	-	-	USART3_CTS	-	-	SEG31	-	TIMx_IC4	EVENT OUT
PD12	-	-	TIM4_CH1	-	-	-	-	USART3_RTS	-	-	SEG32	-	TIMx_IC1	EVENT OUT
PD13	-	-	TIM4_CH2	-	-	-	-	-	-	-	SEG33	-	TIMx_IC2	EVENT OUT
PD14	-	-	TIM4_CH3	-	-	-	-	-	-	-	SEG34	-	TIMx_IC3	EVENT OUT
PD15	-	-	TIM4_CH4	-	-	-	-	-	-	-	SEG35	-	TIMx_IC4	EVENT OUT
PE0	-	-	TIM4_ETR	TIM10_CH1	-	-	-	-	-	-	SEG36	-	TIMx_IC1	EVENT OUT
PE1	-	-	-	TIM11_CH1	-	-	-	-	-	-	SEG37	-	TIMx_IC2	EVENT OUT

Table 9. Alternate function input/output (continued)

Port name	Digital alternate function number													
	AFIO0	AFIO1	AFIO2	AFIO3	AFIO4	AFIO5	AFIO6	AFIO7	AFIO8	. .	AFIO11	. .	AFIO14	AFIO15
	Alternate function													
	SYSTEM	TIM2	TIM3/4/5	TIM9/10/11	I2C1/2	SPI1/2	SPI3	USART1/2/3	UART4/5	-	LCD	-	CPRI	SYSTEM
PE2	TRACECK	-	TIM3_ETR	-	-	-	-	-	-	-	SEG 38	-	TIMx_IC3	EVENT OUT
PE3	TRACED0	-	TIM3_CH1	-	-	-	-	-	-	-	SEG 39	-	TIMx_IC4	EVENT OUT
PE4	TRACED1	-	TIM3_CH2	-	-	-	-	-	-	-	-	-	TIMx_IC1	EVENT OUT
PE5	TRACED2	-	-	TIM9_CH1	-	-	-	-	-	-	-	-	TIMx_IC2	EVENT OUT
PE6-WKUP3	TRACED3	-	-	TIM9_CH2	-	-	-	-	-	-	-	-	TIMx_IC3	EVENT OUT
PE7	-	-	-	-	-	-	-	-	-	-	-	-	TIMx_IC4	EVENT OUT
PE8	-	-	-	-	-	-	-	-	-	-	-	-	TIMx_IC1	EVENT OUT
PE9	-	TIM2_CH1_ETR	-	-	-	-	-	-	-	-	-	-	TIMx_IC2	EVENT OUT
PE10	-	TIM2_CH2	-	-	-	-	-	-	-	-	-	-	TIMx_IC3	EVENT OUT
PE11	-	TIM2_CH3	-	-	-	-	-	-	-	-	-	-	TIMx_IC4	EVENT OUT
PE12	-	TIM2_CH4	-	-	-	SPI1_NSS	-	-	-	-	-	-	TIMx_IC1	EVENT OUT
PE13	-	-	-	-	-	SPI1_SCK	-	-	-	-	-	-	TIMx_IC2	EVENT OUT
PE14	-	-	-	-	-	SPI1_MISO	-	-	-	-	-	-	TIMx_IC3	EVENT OUT
PE15	-	-	-	-	-	SPI1_MOSI	-	-	-	-	-	-	TIMx_IC4	EVENT OUT

Table 9. Alternate function input/output (continued)

Port name	Digital alternate function number													
	AFIO0	AFIO1	AFIO2	AFIO3	AFIO4	AFIO5	AFIO6	AFIO7	AFIO8	. .	AFIO11	. .	AFIO14	AFIO15
	Alternate function													
	SYSTEM	TIM2	TIM3/4/5	TIM9/10/11	I2C1/2	SPI1/2	SPI3	USART1/2/3	UART4/5	-	LCD	-	CPRI	SYSTEM
PF0	-	-	-	-	-	-	-	-	-	-	-	-	-	EVENT OUT
PF1	-	-	-	-	-	-	-	-	-	-	-	-	-	EVENT OUT
PF2	-	-	-	-	-	-	-	-	-	-	-	-	-	EVENT OUT
PF3	-	-	-	-	-	-	-	-	-	-	-	-	-	EVENT OUT
PF4	-	-	-	-	-	-	-	-	-	-	-	-	-	EVENT OUT
PF5	-	-	-	-	-	-	-	-	-	-	-	-	-	EVENT OUT
PF6	-	-	TIM5_ETR	-	-	-	-	-	-	-	-	-	-	EVENT OUT
PF7	-	-	TIM5_CH2	-	-	-	-	-	-	-	-	-	-	EVENT OUT
PF8	-	-	TIM5_CH3	-	-	-	-	-	-	-	-	-	-	EVENT OUT
PF9	-	-	TIM5_CH4	-	-	-	-	-	-	-	-	-	-	EVENT OUT
PF10	-	-	-	-	-	-	-	-	-	-	-	-	-	EVENT OUT
PF11	-	-	-	-	-	-	-	-	-	-	-	-	-	EVENT OUT
PF12	-	-	-	-	-	-	-	-	-	-	-	-	-	EVENT OUT
PF13	-	-	-	-	-	-	-	-	-	-	-	-	-	EVENT OUT

Table 9. Alternate function input/output (continued)

Port name	Digital alternate function number													
	AFIO0	AFIO1	AFIO2	AFIO3	AFIO4	AFIO5	AFIO6	AFIO7	AFIO8	. .	AFIO11	. .	AFIO14	AFIO15
	Alternate function													
	SYSTEM	TIM2	TIM3/4/5	TIM9/10/11	I2C1/2	SPI1/2	SPI3	USART1/2/3	UART4/5	-	LCD	-	CPRI	SYSTEM
PF14	-	-	-	-	-	-	-	-	-	-	-	-	-	EVENT OUT
PF15	-	-	-	-	-	-	-	-	-	-	-	-	-	EVENT OUT
PG0	-	-	-	-	-	-	-	-	-	-	-	-	-	EVENT OUT
PG1	-	-	-	-	-	-	-	-	-	-	-	-	-	EVENT OUT
PG2	-	-	-	-	-	-	-	-	-	-	-	-	-	EVENT OUT
PG3	-	-	-	-	-	-	-	-	-	-	-	-	-	EVENT OUT
PG4	-	-	-	-	-	-	-	-	-	-	-	-	-	EVENT OUT
PG5	-	-	-	-	-	-	-	-	-	-	-	-	-	EVENT OUT
PG6	-	-	-	-	-	-	-	-	-	-	-	-	-	EVENT OUT
PG7	-	-	-	-	-	-	-	-	-	-	-	-	-	EVENT OUT
PG8	-	-	-	-	-	-	-	-	-	-	-	-	-	EVENT OUT
PG9	-	-	-	-	-	-	-	-	-	-	-	-	-	EVENT OUT
PG10	-	-	-	-	-	-	-	-	-	-	-	-	-	EVENT OUT
PG11	-	-	-	-	-	-	-	-	-	-	-	-	-	EVENT OUT

Table 9. Alternate function input/output (continued)

Port name	Digital alternate function number													
	AFIO0	AFIO1	AFIO2	AFIO3	AFIO4	AFIO5	AFIO6	AFIO7	AFIO8	. .	AFIO11	. .	AFIO14	AFIO15
	Alternate function													
	SYSTEM	TIM2	TIM3/4/5	TIM9/10/11	I2C1/2	SPI1/2	SPI3	USART1/2/3	UART4/5	-	LCD	-	CPRI	SYSTEM
PG12	-	-	-	-	-	-	-	-	-	-	-	-	-	EVENT OUT
PG13	-	-	-	-	-	-	-	-	-	-	-	-	-	EVENT OUT
PG14	-	-	-	-	-	-	-	-	-	-	-	-	-	EVENT OUT
PG15	-	-	-	-	-	-	-	-	-	-	-	-	-	EVENT OUT
PH0OSC_IN	-	-	-	-	-	-	-	-	-	-	-	-	-	-
PH1OSC_OUT	-	-	-	-	-	-	-	-	-	-	-	-	-	-
PH2	-	-	-	-	-	-	-	-	-	-	-	-	-	-

5 Memory mapping

Figure 8. Memory map

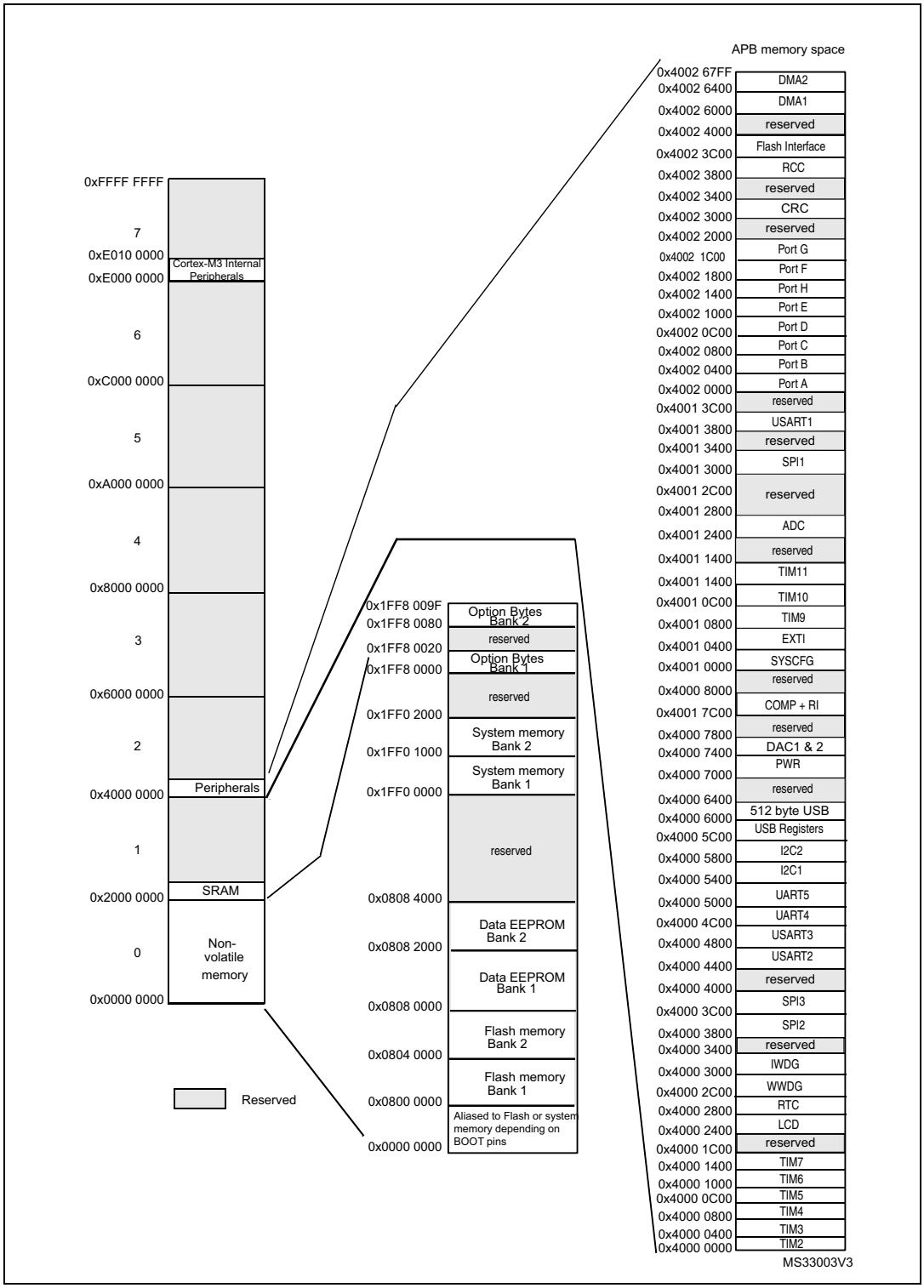

6 Electrical characteristics

6.1 Parameter conditions

Unless otherwise specified, all voltages are referenced to V_{SS}.

6.1.1 Minimum and maximum values

Unless otherwise specified the minimum and maximum values are guaranteed in the worst conditions of ambient temperature, supply voltage and frequencies by tests in production on 100% of the devices with an ambient temperature at T_A = 25 °C and T_A = $T_A$max (given by the selected temperature range).

Data based on characterization results, design simulation and/or technology characteristics are indicated in the table footnotes. Based on characterization, the minimum and maximum values refer to sample tests and represent the mean value plus or minus three times the standard deviation (mean ±3σ).

6.1.2 Typical values

Unless otherwise specified, typical data are based on T_A = 25 °C, V_{DD} = 3.6 V (for the 1.65 V ≤V_{DD} ≤3.6 V voltage range). They are given only as design guidelines and are not tested.

Typical ADC accuracy values are determined by characterization of a batch of samples from a standard diffusion lot over the full temperature range, where 95% of the devices have an error less than or equal to the value indicated (mean ±2σ).

6.1.3 Typical curves

Unless otherwise specified, all typical curves are given only as design guidelines and are not tested.

6.1.4 Loading capacitor

The loading conditions used for pin parameter measurement are shown in *Figure 9*.

6.1.5 Pin input voltage

The input voltage measurement on a pin of the device is described in *Figure 10*.

Figure 9. Pin loading conditions

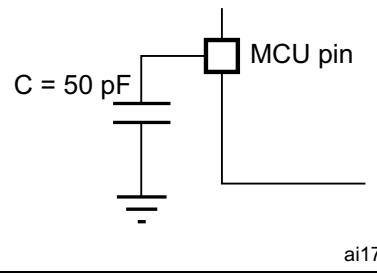

Figure 10. Pin input voltage

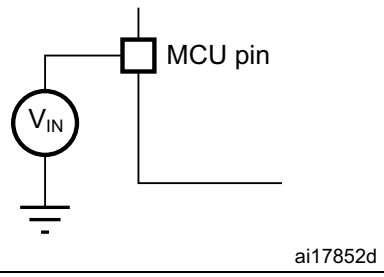

6.1.6 Power supply scheme

Figure 11. Power supply scheme

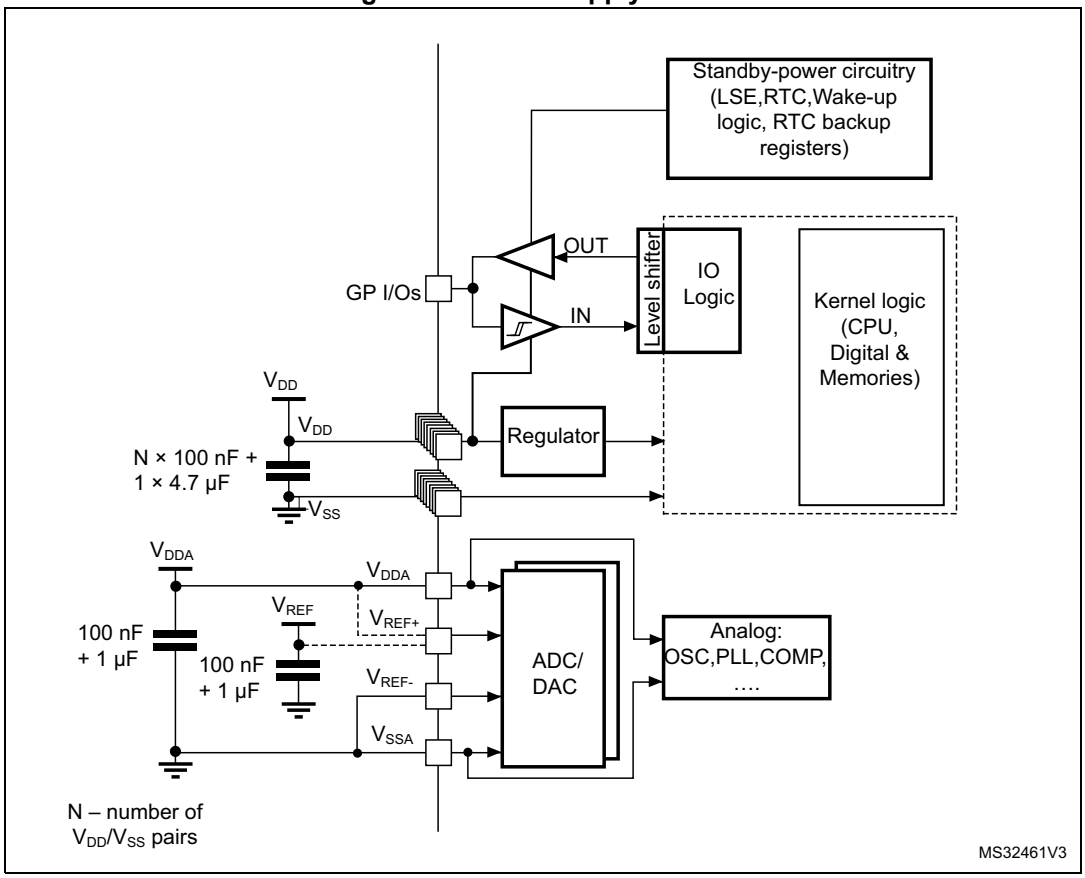

6.1.7 Optional LCD power supply scheme

Figure 12. Optional LCD power supply scheme

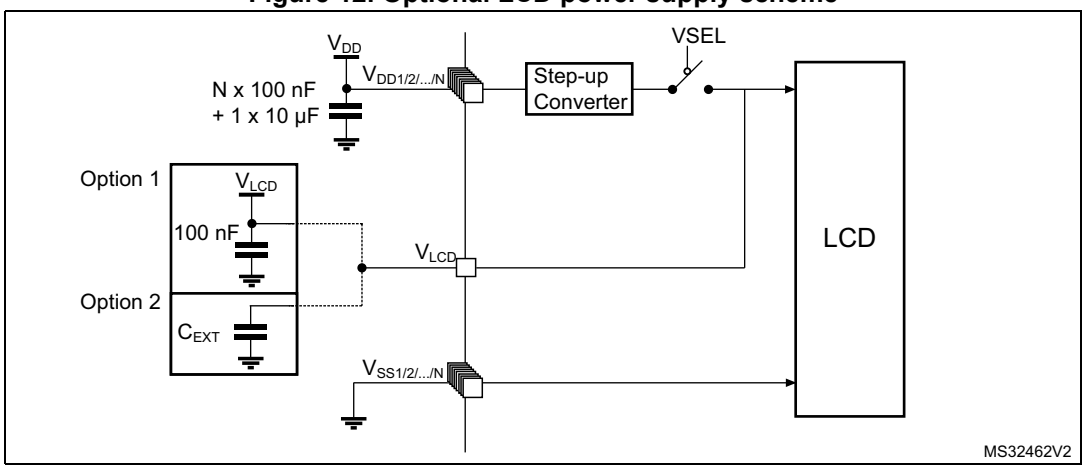

1. Option 1: LCD power supply is provided by a dedicated VLCD supply source, VSEL switch is open.
2. Option 2: LCD power supply is provided by the internal step-up converter, VSEL switch is closed, an external capacitance is needed for correct behavior of this converter.

6.1.8 Current consumption measurement

Figure 13. Current consumption measurement scheme

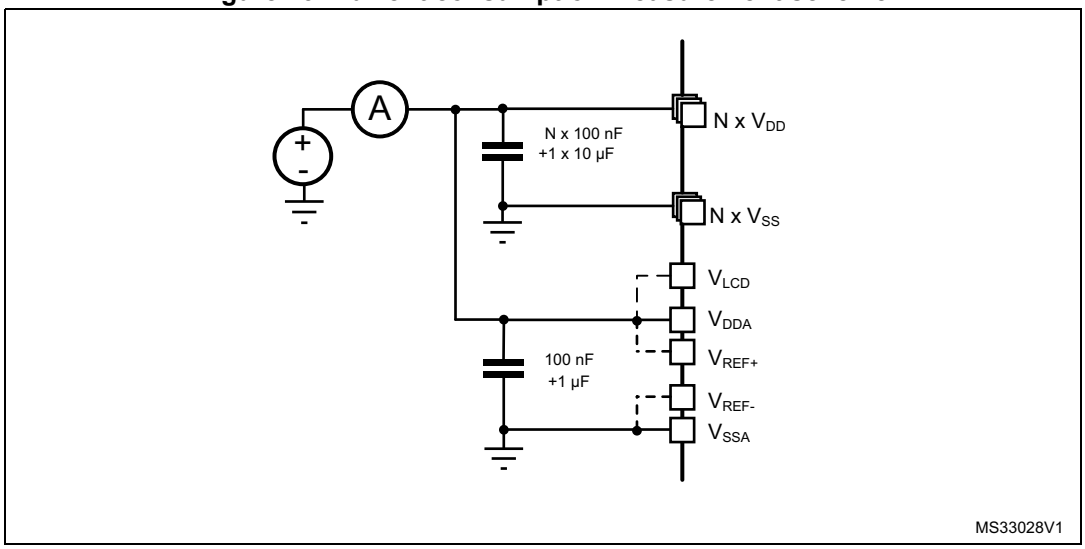

6.2 Absolute maximum ratings

Stresses above the absolute maximum ratings listed in *Table 10: Voltage characteristics*, *Table 11: Current characteristics*, and *Table 12: Thermal characteristics* may cause permanent damage to the device. These are stress ratings only and functional operation of the device at these conditions is not implied. Exposure to maximum rating conditions for extended periods may affect device reliability.

Table 10. Voltage characteristics

Symbol	Ratings	Min	Max	Unit
$V_{DD}–V_{SS}$	External main supply voltage (including V_{DDA} and V_{DD})(1)	–0.3	4.0	V
V_{IN}(2)	Input voltage on five-volt tolerant pin	V_{SS} –0.3	V_{DD}+4.0	
	Input voltage on any other pin	V_{SS} –0.3	4.0	
$\|\Delta V_{DDx}\|$	Variations between different V_{DD} power pins	-	50	mV
$\|V_{SSX} – V_{SS}\|$	Variations between all different ground pins(3)	-	50	
$V_{REF+} – V_{DDA}$	Allowed voltage difference for $V_{REF+} > V_{DDA}$	-	0.4	V
$V_{ESD(HBM)}$	Electrostatic discharge voltage (human body model)	see *Section 6.3.11*		

1. All main power (V_{DD}, V_{DDA}) and ground (V_{SS}, V_{SSA}) pins must always be connected to the external power supply, in the permitted range.
2. V_{IN} maximum must always be respected. Refer to *Table 11* for maximum allowed injected current values.
3. Include V_{REF-} pin.

Table 11. Current characteristics

Symbol	Ratings	Max.	Unit
$I_{VDD(\Sigma)}$	Total current into sum of all V_{DD_x} power lines (source)(1)	100	mA
$I_{VSS(\Sigma)}$(2)	Total current out of sum of all V_{SS_x} ground lines (sink)(1)	100	
$I_{VDD(PIN)}$	Maximum current into each V_{DD_x} power pin (source)(1)	70	
$I_{VSS(PIN)}$	Maximum current out of each VSS_x ground pin (sink)(1)	-70	
I_{IO}	Output current sunk by any I/O and control pin	25	
	Output current sourced by any I/O and control pin	- 25	
$\Sigma I_{IO(PIN)}$	Total output current sunk by sum of all IOs and control pins(2)	60	
	Total output current sourced by sum of all IOs and control pins(2)	-60	
$I_{INJ(PIN)}$ (3)	Injected current on five-volt tolerant I/O(4), RST and B pins	-5/+0	
	Injected current on any other pin (5)	± 5	
$\Sigma I_{INJ(PIN)}$	Total injected current (sum of all I/O and control pins)(6)	± 25	

1. All main power (V_{DD}, V_{DDA}) and ground (V_{SS}, V_{SSA}) pins must always be connected to the external power supply, in the permitted range.
2. This current consumption must be correctly distributed over all I/Os and control pins. The total output current must not be sunk/sourced between two consecutive power supply pins referring to high pin count LQFP packages.
3. Negative injection disturbs the analog performance of the device. See note in *Section 6.3.17*.

4. Positive current injection is not possible on these I/Os. A negative injection is induced by $V_{IN}<V_{SS}$. $I_{INJ(PIN)}$ must never be exceeded. Refer to *Table 10* for maximum allowed input voltage values.
5. A positive injection is induced by $V_{IN} > V_{DD}$ while a negative injection is induced by $V_{IN} < V_{SS}$. $I_{INJ(PIN)}$ must never be exceeded. Refer to *Table 10: Voltage characteristics* for the maximum allowed input voltage values.
6. When several inputs are submitted to a current injection, the maximum $\Sigma I_{INJ(PIN)}$ is the absolute sum of the positive and negative injected currents (instantaneous values).

Table 12. Thermal characteristics

Symbol	Ratings	Value	Unit
T_{STG}	Storage temperature range	–65 to +150	°C
T_J	Maximum junction temperature	150	°C

6.3 Operating conditions

6.3.1 General operating conditions

Table 13. General operating conditions

Symbol	Parameter	Conditions	Min	Max	Unit
f_{HCLK}	Internal AHB clock frequency	-	0	32	MHz
f_{PCLK1}	Internal APB1 clock frequency	-	0	32	
f_{PCLK2}	Internal APB2 clock frequency	-	0	32	
V_{DD}	Standard operating voltage	BOR detector disabled	1.65	3.6	V
		BOR detector enabled, at power on	1.8	3.6	
		BOR detector disabled, after power on	1.65	3.6	
V_{DDA}(1)	Analog operating voltage (ADC and DAC not used)	Must be the same voltage as V_{DD}(2)	1.65	3.6	V
	Analog operating voltage (ADC or DAC used)		1.8	3.6	
V_{IN}	I/O input voltage	FT pins; 2.0 V ≤V_{DD}	-0.3	5.5(3)	V
		FT pins; V_{DD} < 2.0 V	-0.3	5.25(3)	
		BOOT0 pin	0	5.5	
		Any other pin	-0.3	V_{DD}+0.3	
P_D	Power dissipation at TA = 85 °C for suffix 6 or TA = 105 °C for suffix 7(4)	UFBGA132 package	-	333	mW
		LQFP144 package	-	500	
		LQFP100 package	-	465	
		LQFP64 package	-	435	
		WLCSP104 package	-	435	
T_A	Ambient temperature for 6 suffix version	Maximum power dissipation(5)	–40	85	°C
	Ambient temperature for 7 suffix version	Maximum power dissipation	–40	105	

Table 13. General operating conditions (continued)

Symbol	Parameter	Conditions	Min	Max	Unit
T_J	Junction temperature range	6 suffix version	–40	105	°C
		7 suffix version	–40	110	

1. When the ADC is used, refer to *Table 55: ADC characteristics*.
2. It is recommended to power V_{DD} and V_{DDA} from the same source. A maximum difference of 300 mV between V_{DD} and V_{DDA} can be tolerated during power-up .
3. To sustain a voltage higher than VDD+0.3V, the internal pull-up/pull-down resistors must be disabled.
4. If T_A is lower, higher P_D values are allowed as long as T_J does not exceed T_J max (see *Table 71: Thermal characteristics on page 130*).
5. In low-power dissipation state, T_A can be extended to -40°C to 105°C temperature range as long as T_J does not exceed T_J max (see *Table 71: Thermal characteristics on page 130*).

6.3.2 Embedded reset and power control block characteristics

The parameters given in the following table are derived from the tests performed under the conditions summarized in *Table 13*.

Table 14. Embedded reset and power control block characteristics

Symbol	Parameter	Conditions	Min	Typ	Max	Unit
t_{VDD}(1)	V_{DD} rise time rate	BOR detector enabled	0	-	∞	µs/V
		BOR detector disabled	0	-	1000	
	V_{DD} fall time rate	BOR detector enabled	20	-	∞	
		BOR detector disabled	0	-	1000	
$T_{RSTTEMPO}$(1)	Reset temporization	V_{DD} rising, BOR enabled	-	2	3.3	ms
		V_{DD} rising, BOR disabled(2)	0.4	0.7	1.6	
$V_{POR/PDR}$	Power on/power down reset threshold	Falling edge	1	1.5	1.65	V
		Rising edge	1.3	1.5	1.65	
V_{BOR0}	Brown-out reset threshold 0	Falling edge	1.67	1.7	1.74	
		Rising edge	1.69	1.76	1.8	
V_{BOR1}	Brown-out reset threshold 1	Falling edge	1.87	1.93	1.97	
		Rising edge	1.96	2.03	2.07	
V_{BOR2}	Brown-out reset threshold 2	Falling edge	2.22	2.30	2.35	
		Rising edge	2.31	2.41	2.44	

Table 14. Embedded reset and power control block characteristics (continued)

Symbol	Parameter	Conditions	Min	Typ	Max	Unit
V_{BOR3}	Brown-out reset threshold 3	Falling edge	2.45	2.55	2.6	V
		Rising edge	2.54	2.66	2.7	
V_{BOR4}	Brown-out reset threshold 4	Falling edge	2.68	2.8	2.85	
		Rising edge	2.78	2.9	2.95	
V_{PVD0}	Programmable voltage detector threshold 0	Falling edge	1.8	1.85	1.88	
		Rising edge	1.88	1.94	1.99	
V_{PVD1}	PVD threshold 1	Falling edge	1.98	2.04	2.09	
		Rising edge	2.08	2.14	2.18	
V_{PVD2}	PVD threshold 2	Falling edge	2.20	2.24	2.28	
		Rising edge	2.28	2.34	2.38	
V_{PVD3}	PVD threshold 3	Falling edge	2.39	2.44	2.48	
		Rising edge	2.47	2.54	2.58	
V_{PVD4}	PVD threshold 4	Falling edge	2.57	2.64	2.69	
		Rising edge	2.68	2.74	2.79	
V_{PVD5}	PVD threshold 5	Falling edge	2.77	2.83	2.88	
		Rising edge	2.87	2.94	2.99	
V_{PVD6}	PVD threshold 6	Falling edge	2.97	3.05	3.09	
		Rising edge	3.08	3.15	3.20	
V_{hyst}	Hysteresis voltage	BOR0 threshold	-	40	-	mV
		All BOR and PVD thresholds excepting BOR0	-	100	-	

1. Guaranteed by characterization results.
2. Valid for device version without BOR at power up. Please see option “D” in Ordering information scheme for more details.

6.3.3 Embedded internal reference voltage

The parameters given in *Table 16* are based on characterization results, unless otherwise specified.

Table 15. Embedded internal reference voltage calibration values

Calibration value name	Description	Memory address
VREFINT_CAL	Raw data acquired at temperature of 30 °C ±5 °C V_{DDA}= 3 V ±10 mV	0x1FF8 00F8 - 0x1FF8 00F9

Table 16. Embedded internal reference voltage

Symbol	Parameter	Conditions	Min	Typ	Max	Unit
$V_{REFINT\ out}$ (1)	Internal reference voltage	– 40 °C < T_J < +110 °C	1.202	1.224	1.242	V
I_{REFINT}	Internal reference current consumption	-	-	1.4	2.3	µA
$T_{VREFINT}$	Internal reference startup time	-	-	2	3	ms
V_{VREF_MEAS}	V_{DDA} and V_{REF+} voltage during V_{REFINT} factory measure	-	2.99	3	3.01	V
A_{VREF_MEAS}	Accuracy of factory-measured V_{REF} value(2)	Including uncertainties due to ADC and V_{DDA}/V_{REF+} values	-	-	±5	mV
T_{Coeff}(3)	Temperature coefficient	–40 °C < T_J < +110 °C	-	25	100	ppm/°C
A_{Coeff}(3)	Long-term stability	1000 hours, T= 25 °C	-	-	1000	ppm
$V_{DDCoeff}$(3)	Voltage coefficient	3.0 V < V_{DDA} < 3.6 V	-	-	2000	ppm/V
$T_{S_vrefint}$(3)	ADC sampling time when reading the internal reference voltage	-	4	-	-	µs
T_{ADC_BUF}(3)	Startup time of reference voltage buffer for ADC	-	-	-	10	µs
I_{BUF_ADC}(3)	Consumption of reference voltage buffer for ADC	-	-	13.5	25	µA
I_{VREF_OUT}(3)	VREF_OUT output current (4)	-	-	-	1	µA
C_{VREF_OUT}(3)	VREF_OUT output load	-	-	-	50	pF
I_{LPBUF}(3)	Consumption of reference voltage buffer for VREF_OUT and COMP	-	-	730	1200	nA
V_{REFINT_DIV1}(3)	1/4 reference voltage	-	24	25	26	% V_{REFINT}
V_{REFINT_DIV2}(3)	1/2 reference voltage	-	49	50	51	
V_{REFINT_DIV3}(3)	3/4 reference voltage	-	74	75	76	

1. Guaranteed by test in production.
2. The internal V_{REF} value is individually measured in production and stored in dedicated EEPROM bytes.
3. Guaranteed by characterization results.
4. To guarantee less than 1% VREF_OUT deviation.

6.3.4 Supply current characteristics

The current consumption is a function of several parameters and factors such as the operating voltage, temperature, I/O pin loading, device software configuration, operating frequencies, I/O pin switching rate, program location in memory and executed binary code. The current consumption is measured as described in *Figure 13: Current consumption measurement scheme*.

All Run-mode current consumption measurements given in this section are performed with a reduced code that gives a consumption equivalent to the Dhrystone 2.1 code, unless otherwise specified. The current consumption values are derived from tests performed under ambient temperature T_A = 25 °C and V_{DD} supply voltage conditions summarized in *Table 13: General operating conditions*, unless otherwise specified.

The MCU is placed under the following conditions:

- All I/O pins are configured in analog input mode
- All peripherals are disabled except when explicitly mentioned.
- The Flash memory access time, 64-bit access and prefetch is adjusted depending on f_{HCLK} frequency and voltage range to provide the best CPU performance.
- When the peripherals are enabled $f_{APB1} = f_{APB2} = f_{AHB}$.
- When PLL is ON, the PLL inputs are equal to HSI = 16 MHz (if internal clock is used) or HSE = 16 MHz (if HSE bypass mode is used).
- The HSE user clock applied to OSCI_IN input follows the characteristic specified in *Table 26: High-speed external user clock characteristics*.
- For maximum current consumption $V_{DD} = V_{DDA}$ = 3.6 V is applied to all supply pins.
- For typical current consumption $V_{DD} = V_{DDA}$ = 3.0 V is applied to all supply pins if not specified otherwise.

Table 17. Current consumption in Run mode, code with data processing running from Flash

Symbol	Parameter	Conditions		f_{HCLK}	Typ	Max(1)	Unit
I_{DD} (Run from Flash)	Supply current in Run mode, code executed from Flash	f_{HSE} = f_{HCLK} up to 16 MHz included, f_{HSE} = f_{HCLK}/2 above 16 MHz (PLL ON)(2)	Range 3, V_{CORE}=1.2 V VOS[1:0] = 11	1 MHz	225	500	µA
				2 MHz	420	750	
				4 MHz	780	1200	
			Range 2, V_{CORE}=1.5 V VOS[1:0] = 10	4 MHz	0.98	1.6	mA
				8 MHz	1.85	2.9	
				16 MHz	3.6	5.2	
			Range 1, V_{CORE}=1.8 V VOS[1:0] = 01	8 MHz	2.2	3.5	
				16 MHz	4.4	6.5	
				32 MHz	8.6	12	
		HSI clock source (16 MHz)	Range 2, V_{CORE}=1.5 V VOS[1:0] = 10	16 MHz	3.6	5.2	
			Range 1, V_{CORE}=1.8 V VOS[1:0] = 01	32 MHz	8.7	12.3	
		MSI clock, 65 kHz	Range 3, V_{CORE}=1.2 V VOS[1:0] = 11	65 kHz	42	145	µA
		MSI clock, 524 kHz		524 kHz	135	250	
		MSI clock, 4.2 MHz		4.2 MHz	820	1200	

1. Guaranteed by characterization results, unless otherwise specified.
2. Oscillator bypassed (HSEBYP = 1 in RCC_CR register).

Table 18. Current consumption in Run mode, code with data processing running from RAM

Symbol	Parameter	Conditions		f_{HCLK}	Typ	Max(1)	Unit
I_{DD} (Run from RAM)	Supply current in Run mode, code executed from RAM, Flash switched off	f_{HSE} = f_{HCLK} up to 16 MHz included, f_{HSE} = f_{HCLK}/2 above 16 MHz (PLL ON)(2)	Range 3, V_{CORE}=1.2 V VOS[1:0] = 11	1 MHz	200	470	µA
				2 MHz	360	780	
				4 MHz	685	1200	
			Range 2, V_{CORE}=1.5 V VOS[1:0] = 10	4 MHz	0.80	1.5	mA
				8 MHz	1.6	3	
				16 MHz	3.1	5	
			Range 1, V_{CORE}=1.8 V VOS[1:0] = 01	8 MHz	1.9	3.5	
				16 MHz	3.7	5.55	
				32 MHz	7.55	10.9	
		HSI clock source (16 MHz)	Range 2, V_{CORE}=1.5 V VOS[1:0] = 10	16 MHz	3.15	4.8	
			Range 1, V_{CORE}=1.8 V VOS[1:0] = 01	32 MHz	7.75	11.7	
		MSI clock, 65 kHz	Range 3, V_{CORE}=1.2 V VOS[1:0] = 11	65 kHz	40	130	µA
		MSI clock, 524 kHz		524 kHz	115	215	
		MSI clock, 4.2 MHz		4.2 MHz	715	1100	

1. Guaranteed by characterization results, unless otherwise specified.
2. Oscillator bypassed (HSEBYP = 1 in RCC_CR register).

Table 19. Current consumption in Sleep mode

Symbol	Parameter	Conditions		f_{HCLK}	Typ	Max(1)	Unit
I_{DD} (Sleep)	Supply current in Sleep mode, Flash OFF	f_{HSE} = f_{HCLK} up to 16 MHz included, f_{HSE} = f_{HCLK}/2 above 16 MHz (PLL ON)(2)	Range 3, V_{CORE}=1.2 V VOS[1:0] = 11	1 MHz	51	220	µA
				2 MHz	81	300	
				4 MHz	140	380	
			Range 2, V_{CORE}=1.5 V VOS[1:0] = 10	4 MHz	175	500	
				8 MHz	330	700	
				16 MHz	625	1100	
			Range 1, V_{CORE}=1.8 V VOS[1:0] = 01	8 MHz	395	800	
				16 MHz	760	1250	
				32 MHz	1700	2700	
		HSI clock source (16 MHz)	Range 2, V_{CORE}=1.5 V VOS[1:0] = 10	16 MHz	670	1100	
			Range 1, V_{CORE}=1.8 V VOS[1:0] = 01	32 MHz	1750	2700	
		MSI clock, 65 kHz	Range 3, V_{CORE}=1.2 V VOS[1:0] = 11	65 kHz	19	92	
		MSI clock, 524 kHz		524 kHz	33	110	
		MSI clock, 4.2 MHz		4.2 MHz	150	273	
	Supply current in Sleep mode, Flash ON	f_{HSE} = f_{HCLK} up to 16 MHz included, f_{HSE} = f_{HCLK}/2 above 16 MHz (PLL ON)(2)	Range 3, V_{CORE}=1.2 V VOS[1:0] = 11	1 MHz	63	250	
				2 MHz	93	300	
				4 MHz	155	380	
			Range 2, V_{CORE}=1.5 V VOS[1:0] = 10	4 MHz	190	500	
				8 MHz	340	700	
				16 MHz	640	1120	
			Range 1, V_{CORE}=1.8 V VOS[1:0] = 01	8 MHz	410	800	
				16 MHz	770	1300	
				32 MHz	1750	2700	
		HSI clock source (16 MHz)	Range 2, V_{CORE}=1.5 V VOS[1:0] = 10	16 MHz	690	1160	
			Range 1, V_{CORE}=1.8 V VOS[1:0] = 01	32 MHz	1750	2800	
	Supply current in Sleep mode, Flash ON	MSI clock, 65 kHz	Range 3, V_{CORE}=1.2V VOS[1:0] = 11	65 kHz	31	105	
		MSI clock, 524 kHz		524 kHz	45	125	
		MSI clock, 4.2 MHz		4.2 MHz	160	290	

1. Guaranteed by characterization results, unless otherwise specified.
2. Oscillator bypassed (HSEBYP = 1 in RCC_CR register)

Table 20. Current consumption in Low-power run mode

Symbol	Parameter	Conditions			Typ	Max(1)	Unit
I_{DD} (LP Run)	Supply current in Low-power run mode	All peripherals OFF, code executed from RAM, Flash switched OFF, V_{DD} from 1.65 V to 3.6 V	MSI clock, 65 kHz f_{HCLK} = 32 kHz	T_A = -40 °C to 25 °C	11	16	µA
				T_A = 85 °C	36.2	40	
				T_A = 105 °C	65.4	102	
			MSI clock, 65 kHz f_{HCLK} = 65 kHz	T_A =-40 °C to 25 °C	16.5	23	
				T_A = 85 °C	41.9	48	
				T_A = 105 °C	72.1	108	
			MSI clock, 131 kHz f_{HCLK} = 131 kHz	T_A = -40 °C to 25 °C	30	45	
				T_A = 55 °C	36.1	48	
				T_A = 85 °C	55.7	66	
				T_A = 105 °C	86.6	125	
		All peripherals OFF, code executed from Flash, V_{DD} from 1.65 V to 3.6 V	MSI clock, 65 kHz f_{HCLK} = 32 kHz	T_A = -40 °C to 25 °C	26	40.5	
				T_A = 85 °C	53.2	67	
				T_A = 105 °C	92.1	120	
			MSI clock, 65 kHz f_{HCLK} = 65 kHz	T_A = -40 °C to 25 °C	33	49	
				T_A = 85 °C	60.2	75	
				T_A = 105 °C	95.6	130	
			MSI clock, 131 kHz f_{HCLK} = 131 kHz	T_A = -40 °C to 25 °C	48.5	71	
				T_A = 55 °C	54.7	75	
				T_A = 85 °C	76.1	95	
				T_A = 105 °C	112	140	
I_{DD} max (LP Run)	Max allowed current in Low-power run mode	V_{DD} from 1.65 V to 3.6 V	-	-	-	200	

1. Guaranteed by characterization results, unless otherwise specified.

Table 21. Current consumption in Low-power sleep mode

Symbol	Parameter	Conditions			Typ	Max(1)	Unit
I_{DD} (LP Sleep)	Supply current in Low-power sleep mode	All peripherals OFF, V_{DD} from 1.65 V to 3.6 V	MSI clock, 65 kHz f_{HCLK} = 32 kHz Flash OFF	T_A = -40 °C to 25 °C	5.5	-	µA
			MSI clock, 65 kHz f_{HCLK} = 32 kHz Flash ON	T_A = -40 °C to 25 °C	18.5	21	
				T_A = 85 °C	26.8	29	
				T_A = 105 °C	37	47	
			MSI clock, 65 kHz f_{HCLK} = 65 kHz, Flash ON	T_A = -40 °C to 25 °C	18.5	21	
				T_A = 85 °C	27.2	29	
				T_A = 105 °C	37.3	47	
			MSI clock, 131 kHz f_{HCLK} = 131 kHz, Flash ON	T_A = -40 °C to 25 °C	21.5	25	
				T_A = 55 °C	23.7	26	
				T_A = 85 °C	29.8	32	
				T_A = 105 °C	39.7	50	
		TIM9 and USART1 enabled, Flash ON, V_{DD} from 1.65 V to 3.6 V	MSI clock, 65 kHz f_{HCLK} = 32 kHz	T_A = -40 °C to 25 °C	18.5	21	
				T_A = 85 °C	26.8	29	
				T_A = 105 °C	38.3	47	
			MSI clock, 65 kHz f_{HCLK} = 65 kHz	T_A = -40 °C to 25 °C	18.5	21	
				T_A = 85 °C	27.2	29	
				T_A = 105 °C	38.5	47	
			MSI clock, 131 kHz f_{HCLK} = 131 kHz	T_A = -40 °C to 25 °C	21.5	25	
				T_A = 55 °C	23.7	26	
				T_A = 85 °C	29.8	32	
				T_A = 105 °C	41.2	50	
I_{DD} max (LP Sleep)	Max allowed current in Low-power sleep mode	V_{DD} from 1.65 V to 3.6 V	-	-	-	200	

1. Guaranteed by characterization results, unless otherwise specified.

Table 22. Typical and maximum current consumptions in Stop mode

Symbol	Parameter	Conditions			Typ	Max(1)	Unit
I_{DD} (Stop with RTC)	Supply current in Stop mode with RTC enabled	RTC clocked by LSI or LSE external clock (32.768kHz), regulator in LP mode, HSI and HSE OFF (no independent watchdog)	LCD OFF	T_A = -40°C to 25°C V_{DD} = 1.8 V	1.18	-	µA
				T_A = -40°C to 25°C	1.4	4	
				T_A = 55°C	3.02	6	
				T_A= 85°C	7.44	11	
				T_A = 105°C	15.5	27	
			LCD ON (static duty)(2)	T_A = -40°C to 25°C	1.5	6	
				T_A = 55°C	4.65	7	
				T_A= 85°C	9.07	13	
				T_A = 105°C	15.6	31	
			LCD ON (1/8 duty)(3)	T_A = -40°C to 25°C	3.9	10	
				T_A = 55°C	5.19	11	
				T_A= 85°C	9.8	17	
				T_A = 105°C	18.4	48	
		RTC clocked by LSE external quartz (32.768kHz), regulator in LP mode, HSI and HSE OFF (no independent watchdog(4)	LCD OFF	T_A = -40°C to 25°C	1.65	-	
				T_A = 55°C	3.32	-	
				T_A= 85°C	7.83	-	
				T_A = 105°C	16	-	
			LCD ON (static duty)(2)	T_A = -40°C to 25°C	1.75	-	
				T_A = 55°C	4.9	-	
				T_A= 85°C	9.41	-	
				T_A = 105°C	15.8	-	
			LCD ON (1/8 duty)(3)	T_A = -40°C to 25°C	4.1	-	
				T_A = 55°C	5.53	-	
				T_A= 85°C	10	-	
				T_A = 105°C	18.5	-	
			LCD OFF	T_A = -40°C to 25°C V_{DD} = 1.8V	1.33	-	
				T_A = -40°C to 25°C V_{DD} = 3.0V	1.62	-	
				T_A = -40°C to 25°C V_{DD} = 3.6V	1.87	-	

Table 22. Typical and maximum current consumptions in Stop mode (continued)

Symbol	Parameter	Conditions		Typ	Max(1)	Unit
I_{DD} (Stop)	Supply current in Stop mode (RTC disabled)	Regulator in LP mode, HSI and HSE OFF, independent watchdog and LSI enabled	T_A = -40°C to 25°C	1.8	2.2	µA
		Regulator in LP mode, LSI, HSI and HSE OFF (no independent watchdog)	T_A = -40°C to 25°C	0.560	1.5	
			T_A = 55°C	2.18	4	
			T_A= 85°C	6.6	12	
			T_A = 105°C	14.9	26	
I_{DD} (WU from Stop)	Supply current during wakeup from Stop mode	MSI = 4.2 MHz	T_A = -40°C to 25°C	2	-	mA
		MSI = 1.05 MHz		1.45	-	
		MSI = 65 kHz(5)		1.45	-	

1. Guaranteed by characterization results, unless otherwise specified.
2. LCD enabled with external VLCD, static duty, division ratio = 256, all pixels active, no LCD connected.
3. LCD enabled with external VLCD, 1/8 duty, 1/3 bias, division ratio = 64, all pixels active, no LCD connected.
4. Based on characterization done with a 32.768 kHz crystal (MC306-G-06Q-32.768, manufacturer JFVNY) with two 6.8 pF loading capacitors.
5. When MSI = 64 kHz, the RMS current is measured over the first 15 µs following the wakeup event. For the remaining part of the wakeup period, the current corresponds the Run mode current.

Table 23. Typical and maximum current consumptions in Standby mode

Symbol	Parameter	Conditions		Typ	Max(1)	Unit
I_{DD} (Standby with RTC)	Supply current in Standby mode with RTC enabled	RTC clocked by LSI (no independent watchdog)	T_A = -40 °C to 25 °C V_{DD} = 1.8 V	0.865	-	µA
			T_A = -40 °C to 25 °C	1.11	1.9	
			T_A = 55 °C	1.72	2.2	
			T_A= 85 °C	2.12	4	
			T_A = 105 °C	2.54	8.3(2)	
		RTC clocked by LSE external quartz (no independent watchdog)(3)	T_A = -40 °C to 25 °C V_{DD} = 1.8 V	0.97	-	
			T_A = -40 °C to 25 °C	1.28	-	
			T_A = 55 °C	2.01	-	
			T_A= 85 °C	2.5	-	
			T_A = 105 °C	2.98	-	
I_{DD} (Standby)	Supply current in Standby mode (RTC disabled)	Independent watchdog and LSI enabled	T_A = -40 °C to 25 °C	1	1.7	
		Independent watchdog and LSI OFF	T_A = -40 °C to 25 °C	0.29	1	
			T_A = 55 °C	0.96	1.3	
			T_A = 85 °C	1.38	3	
			T_A = 105 °C	1.98	7(2)	
I_{DD} (WU from Standby)	Supply current during wakeup time from Standby mode	-	T_A = -40 °C to 25 °C	1	-	mA

1. Guaranteed by characterization results, unless otherwise specified.
2. Guaranteed by test in production.
3. Based on characterization done with a 32.768 kHz crystal (MC306-G-06Q-32.768, manufacturer JFVNY) with two 6.8pF loading capacitors.

On-chip peripheral current consumption

The current consumption of the on-chip peripherals is given in the following table. The MCU is placed under the following conditions:

- all I/O pins are in input mode with a static value at V_{DD} or V_{SS} (no load)
- all peripherals are disabled unless otherwise mentioned
- the given value is calculated by measuring the current consumption
  - with all peripherals clocked off
  - with only one peripheral clocked on

Table 24. Peripheral current consumption(1)

Peripheral		Typical consumption, V_{DD} = 3.0 V, T_A = 25 °C				Unit
		Range 1, V_{CORE}= 1.8 V VOS[1:0] = 01	Range 2, V_{CORE}= 1.5 V VOS[1:0] = 10	Range 3, V_{CORE}= 1.2 V VOS[1:0] = 11	Low-power sleep and run	
APB1	TIM2	12.0	10.0	8.0	10.0	µA/MHz (f_{HCLK})
	TIM3	10.5	8.8	7.0	8.8	
	TIM4	10.4	8.8	7.0	8.8	
	TIM5	13.8	11.5	9.1	11.5	
	TIM6	3.9	3.0	2.5	3.0	
	TIM7	3.8	3.3	2.6	3.3	
	LCD	4.2	3.6	2.8	3.6	
	WWDG	2.9	2.5	2.1	2.5	
	SPI2	5.4	4.4	3.5	4.4	
	SPI3	5.5	4.6	3.7	4.6	
	USART2	7.6	6.2	4.9	6.2	
	USART3	7.6	6.2	5.0	6.2	
	USART4	7.3	6.1	4.8	6.1	
	USART5	7.6	6.3	5.0	6.3	
	I2C1	7.3	6.1	4.8	6.1	
	I2C2	7.2	5.9	4.7	5.9	
	USB	13.0	11.2	8.9	11.2	
	PWR	2.6	2.3	1.9	2.3	
	DAC	5.9	5.0	4.0	5.0	
	COMP	3.9	3.3	2.6	3.3	

Table 24. Peripheral current consumption(1) (continued)

Peripheral		Typical consumption, V_{DD} = 3.0 V, T_A = 25 °C				Unit
		Range 1, V_{CORE}= 1.8 V VOS[1:0] = 01	Range 2, V_{CORE}= 1.5 V VOS[1:0] = 10	Range 3, V_{CORE}= 1.2 V VOS[1:0] = 11	Low-power sleep and run	
APB2	SYSCFG & RI	2.9	2.4	2.0	2.4	µA/MHz (f_{HCLK})
	TIM9	8.2	6.9	5.5	6.9	
	TIM10	6.2	5.1	4.1	5.1	
	TIM11	6.2	5.1	4.1	5.1	
	ADC(2)	9.5	7.9	6.2	7.9	
	SPI1	4.8	3.9	3.2	3.9	
	USART1	8.2	6.9	5.4	6.9	
AHB	GPIOA	6.3	5.3	4.1	5.3	
	GPIOB	6.3	5.3	4.1	5.3	
	GPIOC	6.3	5.2	4.1	5.2	
	GPIOD	8.1	6.8	5.4	6.8	
	GPIOE	6.7	5.7	4.5	5.7	
	GPIOF	5.9	4.9	3.9	4.9	
	GPIOG	7.2	6.1	4.9	6.1	
	GPIOH	1.7	1.4	1.1	1.4	
	CRC	0.8	0.7	0.5	0.7	
	FLASH	21.6	18.1	16.0	-(6)	
	DMA1	16.8	14.5	11.5	14.5	
	DMA2	15.7	13.6	10.8	13.6	
All enabled		222	184	160	165.9	
$I_{DD\ (RTC)}$		0.4				µA
$I_{DD\ (LCD)}$		3.1				
$I_{DD\ (ADC)}$(3)		1450				
$I_{DD\ (DAC)}$(4)		340				
$I_{DD\ (COMP1)}$		0.16				
$I_{DD\ (COMP2)}$	Slow mode	2				
	Fast mode	5				
$I_{DD\ (PVD\ /\ BOR)}$(5)		2.6				
$I_{DD\ (IWDG)}$		0.25				

1. Data based on differential I_{DD} measurement between all peripherals OFF an one peripheral with clock enabled, in the following conditions: f_{HCLK} = 32 MHz (range 1), f_{HCLK} = 16 MHz (range 2), f_{HCLK} = 4 MHz (range 3), f_{HCLK} = 64kHz (Low-power run/sleep), f_{APB1} = f_{HCLK}, f_{APB2} = f_{HCLK}, default prescaler value for each peripheral. The CPU is in Sleep mode in both cases. No I/O pins toggling.
2. HSI oscillator is OFF for this measure.

3. Data based on a differential I_{DD} measurement between ADC in reset configuration and continuous ADC conversion (HSI consumption not included).
4. Data based on a differential I_{DD} measurement between DAC in reset configuration and continuous DAC conversion of $V_{DD}/2$. DAC is in buffered mode, output is left floating.
5. Including supply current of internal reference voltage.
6 In Low-power sleep and run mode, the Flash memory must always be in power-down mode.

6.3.5 Wakeup time from low-power mode

The wakeup times given in the following table are measured with the MSI RC oscillator. The clock source used to wake up the device depends on the current operating mode:

- Sleep mode: the clock source is the clock that was set before entering Sleep mode
- Stop mode: the clock source is the MSI oscillator in the range configured before entering Stop mode
- Standby mode: the clock source is the MSI oscillator running at 2.1 MHz

All timings are derived from tests performed under the conditions summarized in *Table 13*.

Table 25. Low-power mode wakeup timings

Symbol	Parameter	Conditions	Typ	Max(1)	Unit
$t_{WUSLEEP}$	Wakeup from Sleep mode	f_{HCLK} = 32 MHz	0.4	-	µs
$t_{WUSLEEP_LP}$	Wakeup from Low-power sleep mode, f_{HCLK} = 262 kHz	f_{HCLK} = 262 kHz Flash enabled	46	-	
		f_{HCLK} = 262 kHz Flash switched OFF	46	-	
t_{WUSTOP}	Wakeup from Stop mode, regulator in Run mode ULP bit = 1 and FWU bit = 1	$f_{HCLK} = f_{MSI}$ = 4.2 MHz	8.2	-	
	Wakeup from Stop mode, regulator in low-power mode ULP bit = 1 and FWU bit = 1	$f_{HCLK} = f_{MSI}$ = 4.2 MHz Voltage range 1 and 2	7.7	8.9	
		$f_{HCLK} = f_{MSI}$ = 4.2 MHz Voltage range 3	8.2	13.1	
		$f_{HCLK} = f_{MSI}$ = 2.1 MHz	10.2	13.4	
		$f_{HCLK} = f_{MSI}$ = 1.05 MHz	16	20	
		$f_{HCLK} = f_{MSI}$ = 524 kHz	31	37	
		$f_{HCLK} = f_{MSI}$ = 262 kHz	57	66	
		$f_{HCLK} = f_{MSI}$ = 131 kHz	112	123	
		f_{HCLK} = MSI = 65 kHz	221	236	
$t_{WUSTDBY}$	Wakeup from Standby mode ULP bit = 1 and FWU bit = 1	f_{HCLK} = MSI = 2.1 MHz	58	104	
	Wakeup from Standby mode FWU bit = 0	f_{HCLK} = MSI = 2.1 MHz	2.6	3.25	ms

1. Guaranteed by characterization, unless otherwise specified

6.3.6 External clock source characteristics

High-speed external user clock generated from an external source

In bypass mode the HSE oscillator is switched off and the input pin is a standard GPIO.The external clock signal has to respect the I/O characteristics in *Section 6.3.12*. However, the recommended clock input waveform is shown in *Figure 14*.

Table 26. High-speed external user clock characteristics(1)

Symbol	Parameter	Conditions	Min	Typ	Max	Unit
f_{HSE_ext}	User external clock source frequency	CSS is on or PLL is used	1	8	32	MHz
		CSS is off, PLL not used	0	8	32	MHz
V_{HSEH}	OSC_IN input pin high level voltage	-	$0.7V_{DD}$	-	V_{DD}	V
V_{HSEL}	OSC_IN input pin low level voltage		V_{SS}	-	$0.3V_{DD}$	
$t_{w(HSEH)}$ $t_{w(HSEL)}$	OSC_IN high or low time		12	-	-	ns
$t_{r(HSE)}$ $t_{f(HSE)}$	OSC_IN rise or fall time		-	-	20	
$C_{in(HSE)}$	OSC_IN input capacitance		-	2.6	-	pF

1. Guaranteed by design.

Figure 14. High-speed external clock source AC timing diagram

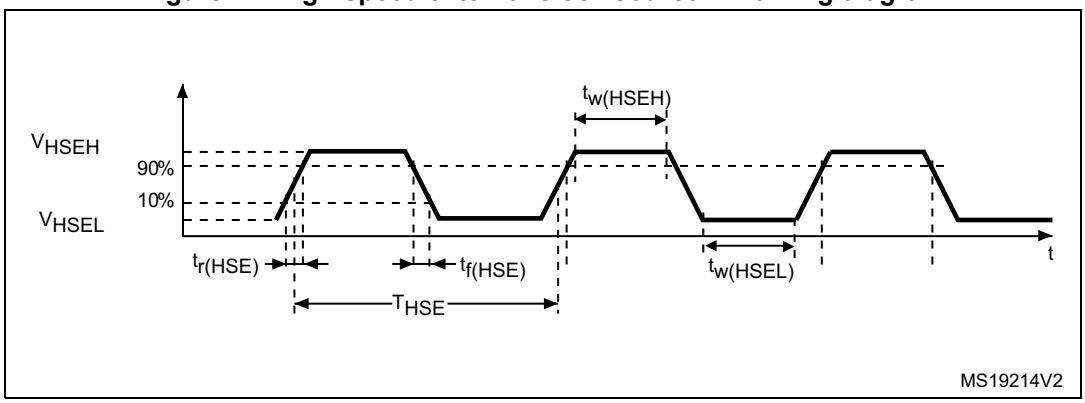

Low-speed external user clock generated from an external source

The characteristics given in the following table result from tests performed using a low-speed external clock source, and under the conditions summarized in *Table 13*.

Table 27. Low-speed external user clock characteristics(1)

Symbol	Parameter	Conditions	Min	Typ	Max	Unit
f_{LSE_ext}	User external clock source frequency	-	1	32.768	1000	kHz
V_{LSEH}	OSC32_IN input pin high level voltage		$0.7V_{DD}$	-	V_{DD}	V
V_{LSEL}	OSC32_IN input pin low level voltage		V_{SS}	-	$0.3V_{DD}$	
$t_{w(LSEH)}$ $t_{w(LSEL)}$	OSC32_IN high or low time		465	-	-	ns
$t_{r(LSE)}$ $t_{f(LSE)}$	OSC32_IN rise or fall time		-	-	10	
$C_{IN(LSE)}$	OSC32_IN input capacitance	-	-	0.6	-	pF

1. Guaranteed by design.

Figure 15. Low-speed external clock source AC timing diagram

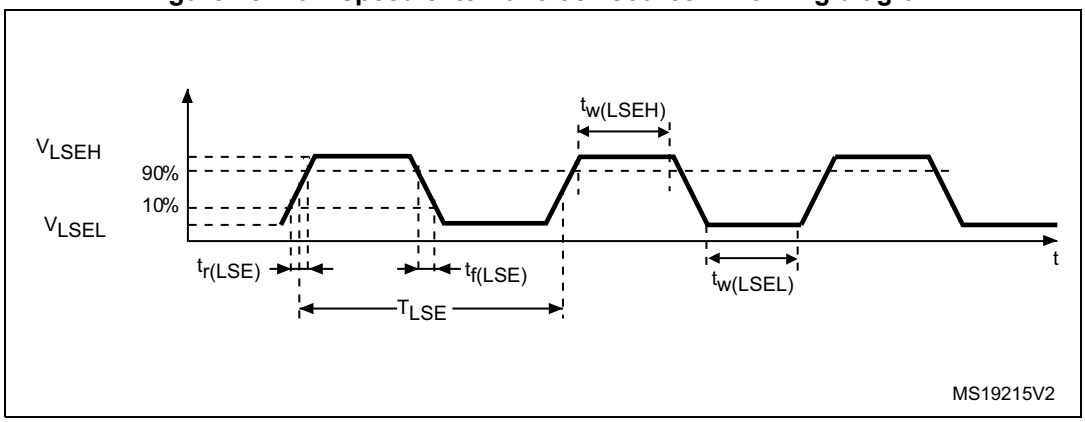

High-speed external clock generated from a crystal/ceramic resonator

The high-speed external (HSE) clock can be supplied with a 1 to 24 MHz crystal/ceramic resonator oscillator. All the information given in this paragraph are based on characterization results obtained with typical external components specified in *Table 28*. In the application, the resonator and the load capacitors have to be placed as close as possible to the oscillator pins in order to minimize output distortion and startup stabilization time. Refer to the crystal resonator manufacturer for more details on the resonator characteristics (frequency, package, accuracy).

Table 28. HSE oscillator characteristics(1)(2)

Symbol	Parameter	Conditions	Min	Typ	Max	Unit
f_{OSC_IN}	Oscillator frequency	-	1		24	MHz
R_F	Feedback resistor	-	-	200	-	kΩ
C	Recommended load capacitance versus equivalent serial resistance of the crystal (R_S)(3)	R_S = 30 Ω	-	20	-	pF
I_{HSE}	HSE driving current	V_{DD}= 3.3 V, V_{IN} = V_{SS} with 30 pF load	-	-	3	mA
$I_{DD(HSE)}$	HSE oscillator power consumption	C = 20 pF f_{OSC} = 16 MHz	-	-	2.5 (startup) 0.7 (stabilized)	mA
		C = 10 pF f_{OSC} = 16 MHz	-	-	2.5 (startup) 0.46 (stabilized)	
g_m	Oscillator transconductance	Startup	3.5	-	-	mA /V
$t_{SU(HSE)}$(4)	Startup time	V_{DD} is stabilized	-	1	-	ms

1. Resonator characteristics given by the crystal/ceramic resonator manufacturer.
2. Guaranteed by characterization results.
3. The relatively low value of the RF resistor offers a good protection against issues resulting from use in a humid environment, due to the induced leakage and the bias condition change. However, it is recommended to take this point into account if the MCU is used in tough humidity conditions.
4. $t_{SU(HSE)}$ is the startup time measured from the moment it is enabled (by software) to a stabilized 8 MHz oscillation is reached. This value is measured for a standard crystal resonator and it can vary significantly with the crystal manufacturer.

For C_{L1} and C_{L2}, it is recommended to use high-quality external ceramic capacitors in the 5 pF to 25 pF range (typ.), designed for high-frequency applications, and selected to match the requirements of the crystal or resonator (see *Figure 16*). C_{L1} and C_{L2} are usually the same size. The crystal manufacturer typically specifies a load capacitance which is the series combination of C_{L1} and C_{L2}. PCB and MCU pin capacitance must be included (10 pF can be used as a rough estimate of the combined pin and board capacitance) when sizing C_{L1} and C_{L2}. Refer to the application note AN2867 “Oscillator design guide for ST microcontrollers” available from the ST website *www.st.com*.

Figure 16. HSE oscillator circuit diagram

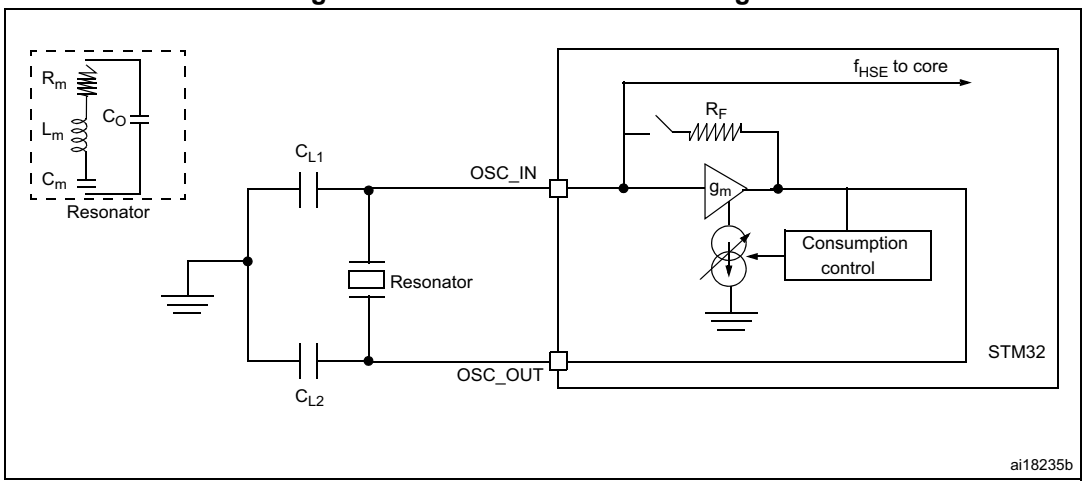

1. R_{EXT} value depends on the crystal characteristics.

Low-speed external clock generated from a crystal/ceramic resonator

The low-speed external (LSE) clock can be supplied with a 32.768 kHz crystal/ceramic resonator oscillator. All the information given in this paragraph are based on characterization results obtained with typical external components specified in *Table 29*. In the application, the resonator and the load capacitors have to be placed as close as possible to the oscillator pins in order to minimize output distortion and startup stabilization time. Refer to the crystal resonator manufacturer for more details on the resonator characteristics (frequency, package, accuracy).

Table 29. LSE oscillator characteristics (f_{LSE} = 32.768 kHz)(1)

Symbol	Parameter	Conditions	Min	Typ	Max	Unit
f_{LSE}	Low speed external oscillator frequency	-	-	32.768	-	kHz
R_F	Feedback resistor	-	-	1.2	-	MΩ
C(2)	Recommended load capacitance versus equivalent serial resistance of the crystal (R_S)(3)	R_S = 30 kΩ	-	8	-	pF
I_{LSE}	LSE driving current	V_{DD} = 3.3 V, V_{IN} = V_{SS}	-	-	1.1	µA
$I_{DD\ (LSE)}$	LSE oscillator current consumption	V_{DD} = 1.8 V	-	450	-	nA
		V_{DD} = 3.0 V	-	600	-	
		V_{DD} = 3.6V	-	750	-	
g_m	Oscillator transconductance	-	3	-	-	µA/V
$t_{SU(LSE)}$(4)	Startup time	V_{DD} is stabilized	-	1	-	s

1. Guaranteed by characterization results.
2. Refer to the note and caution paragraphs below the table, and to the application note AN2867 “Oscillator design guide for ST microcontrollers”.
3. The oscillator selection can be optimized in terms of supply current using an high quality resonator with small R_S value for example MSIV-TIN32.768kHz. Refer to crystal manufacturer for more details.

4. $t_{SU(LSE)}$ is the startup time measured from the moment it is enabled (by software) to a stabilized 32.768 kHz oscillation is reached. This value is measured for a standard crystal resonator and it can vary significantly with the crystal manufacturer.

Note: For C_{L1} and C_{L2}, it is recommended to use high-quality ceramic capacitors in the 5 pF to 15 pF range selected to match the requirements of the crystal or resonator (see Figure 17). C_{L1} and C_{L2}, are usually the same size. The crystal manufacturer typically specifies a load capacitance which is the series combination of C_{L1} and C_{L2}.
Load capacitance C_L has the following formula: $C_L = C_{L1} \times C_{L2} / (C_{L1} + C_{L2}) + C_{stray}$ where C_{stray} is the pin capacitance and board or trace PCB-related capacitance. Typically, it is between 2 pF and 7 pF.

Caution: To avoid exceeding the maximum value of C_{L1} and C_{L2} (15 pF) it is strongly recommended to use a resonator with a load capacitance $C_L \leq 7$ pF. Never use a resonator with a load capacitance of 12.5 pF.
Example: if the user chooses a resonator with a load capacitance of C_L = 6 pF and C_{stray} = 2 pF, then $C_{L1} = C_{L2}$ = 8 pF.

Figure 17. Typical application with a 32.768 kHz crystal

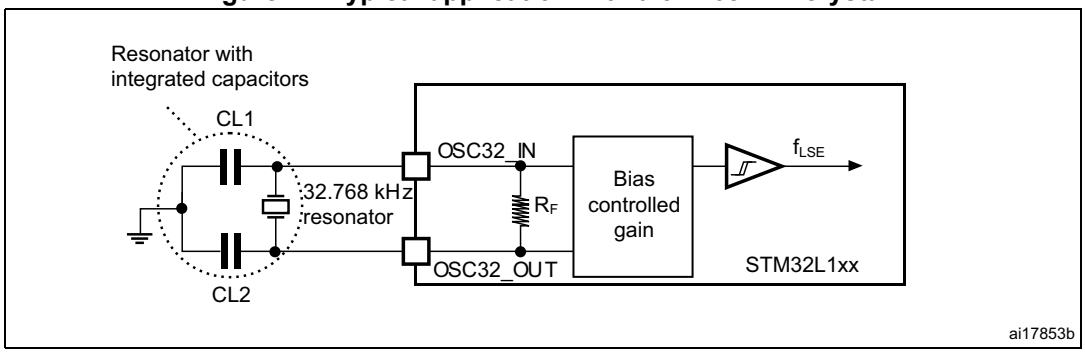

6.3.7 Internal clock source characteristics

The parameters given in *Table 30* are derived from tests performed under the conditions summarized in *Table 13*.

High-speed internal (HSI) RC oscillator

Table 30. HSI oscillator characteristics

Symbol	Parameter	Conditions	Min	Typ	Max	Unit
f_{HSI}	Frequency	V_{DD} = 3.0 V	-	16	-	MHz
$_{TRIM}$(1)(2)	HSI user-trimmed resolution	Trimming code is not a multiple of 16	-	±0.4	0.7	%
		Trimming code is a multiple of 16	-	-	±1.5	%
ACC_{HSI}(2)	Accuracy of the factory-calibrated HSI oscillator	V_{DDA} = 3.0 V, T_A = 25 °C	-1(3)	-	1(3)	%
		V_{DDA} = 3.0 V, T_A = 0 to 55 °C	-1.5	-	1.5	%
		V_{DDA} = 3.0 V, T_A = -10 to 70 °C	-2	-	2	%
		V_{DDA} = 3.0 V, T_A = -10 to 85 °C	-2.5	-	2	%
		V_{DDA} = 3.0 V, T_A = -10 to 105 °C	-4	-	2	%
		V_{DDA} = 1.65 V to 3.6 V T_A = -40 to 105 °C	-4	-	3	%
$t_{SU(HSI)}$(2)	HSI oscillator startup time	-	-	3.7	6	µs
$I_{DD(HSI)}$(2)	HSI oscillator power consumption	-	-	100	140	µA

1. The trimming step differs depending on the trimming code. It is usually negative on the codes which are multiples of 16 (0x00, 0x10, 0x20, 0x30...0xE0).
2. Guaranteed by characterization results.
3. Guaranteed by test in production.

Low-speed internal (LSI) RC oscillator

Table 31. LSI oscillator characteristics

Symbol	Parameter	Min	Typ	Max	Unit
f_{LSI}(1)	LSI frequency	26	38	56	kHz
D_{LSI}(2)	LSI oscillator frequency drift 0°C ≤T_A ≤105°C	-10	-	4	%
$t_{su(LSI)}$(3)	LSI oscillator startup time	-	-	200	µs
$I_{DD(LSI)}$(3)	LSI oscillator power consumption	-	400	510	nA

1. Guaranteed by test in production.
2. This is a deviation for an individual part, once the initial frequency has been measured.
3. Guaranteed by design.

Multi-speed internal (MSI) RC oscillator

Table 32. MSI oscillator characteristics

Symbol	Parameter	Condition	Typ	Max	Unit
f_{MSI}	Frequency after factory calibration, done at V_{DD}= 3.3 V and T_A = 25 °C	MSI range 0	65.5	-	kHz
		MSI range 1	131	-	
		MSI range 2	262	-	
		MSI range 3	524	-	
		MSI range 4	1.05	-	MHz
		MSI range 5	2.1	-	
		MSI range 6	4.2	-	
ACC_{MSI}	Frequency error after factory calibration	-	±0.5	-	%
$D_{TEMP(MSI)}$(1)	MSI oscillator frequency drift 0 °C ≤T_A ≤105 °C	-	±3	-	%
$D_{VOLT(MSI)}$(1)	MSI oscillator frequency drift 1.65 V ≤V_{DD} ≤3.6 V, T_A = 25 °C	-	-	2.5	%/V
$I_{DD(MSI)}$(2)	MSI oscillator power consumption	MSI range 0	0.75	-	µA
		MSI range 1	1	-	
		MSI range 2	1.5	-	
		MSI range 3	2.5	-	
		MSI range 4	4.5	-	
		MSI range 5	8	-	
		MSI range 6	15	-	
$t_{SU(MSI)}$	MSI oscillator startup time	MSI range 0	30	-	µs
		MSI range 1	20	-	
		MSI range 2	15	-	
		MSI range 3	10	-	
		MSI range 4	6	-	
		MSI range 5	5	-	
		MSI range 6, Voltage range 1 and 2	3.5	-	
		MSI range 6, Voltage range 3	5	-	

Table 32. MSI oscillator characteristics (continued)

Symbol	Parameter	Condition	Typ	Max	Unit
$t_{STAB(MSI)}$(2)	MSI oscillator stabilization time	MSI range 0	-	40	µs
		MSI range 1	-	20	
		MSI range 2	-	10	
		MSI range 3	-	4	
		MSI range 4	-	2.5	
		MSI range 5	-	2	
		MSI range 6, Voltage range 1 and 2	-	2	
		MSI range 3, Voltage range 3	-	3	
$f_{OVER(MSI)}$	MSI oscillator frequency overshoot	Any range to range 5	-	4	MHz
		Any range to range 6	-	6	

1. This is a deviation for an individual part, once the initial frequency has been measured.
2. Guaranteed by characterization results.

6.3.8 PLL characteristics

The parameters given in *Table 33* are derived from tests performed under the conditions summarized in *Table 13*.

Table 33. PLL characteristics

Symbol	Parameter	Value			Unit
		Min	Typ	Max(1)	
f_{PLL_IN}	PLL input clock(2)	2	-	24	MHz
	PLL input clock duty cycle	45	-	55	%
f_{PLL_OUT}	PLL output clock	2	-	32	MHz
t_{LOCK}	PLL lock time PLL input = 16 MHz PLL VCO = 96 MHz	-	115	160	µs
Jitter	Cycle-to-cycle jitter	-	-	±600	ps
I_{DDA}(PLL)	Current consumption on V_{DDA}	-	220	450	µA
I_{DD}(PLL)	Current consumption on V_{DD}	-	120	150	

1. Guaranteed by characterization results.
2. Take care of using the appropriate multiplier factors so as to have PLL input clock values compatible with the range defined by f_{PLL_OUT}.

6.3.9 Memory characteristics

The characteristics are given at T_A = -40 to 105 °C unless otherwise specified.

RAM memory

Table 34. RAM and hardware registers

Symbol	Parameter	Conditions	Min	Typ	Max	Unit
VRM	Data retention mode(1)	STOP mode (or RESET)	1.65	-	-	V

1. Minimum supply voltage without losing data stored in RAM (in Stop mode or under Reset) or in hardware registers (only in Stop mode).

Flash memory and data EEPROM

Table 35. Flash memory and data EEPROM characteristics

Symbol	Parameter	Conditions	Min	Typ	Max(1)	Unit
V_{DD}	Operating voltage Read / Write / Erase	-	1.65	-	3.6	V
t_{prog}	Programming/ erasing time for byte / word / double word / half-page	Erasing	-	3.28	3.94	ms
		Programming	-	3.28	3.94	
I_{DD}	Average current during the whole programming / erase operation	T_A = 25 °C, V_{DD} = 3.6 V	-	600	-	µA
	Maximum current (peak) during the whole programming / erase operation		-	1.5	2.5	mA

1. Guaranteed by design.

Table 36. Flash memory and data EEPROM endurance and retention

Symbol	Parameter	Conditions	Value			Unit
			Min(1)	Typ	Max	
N_{CYC}(2)	Cycling (erase / write) Program memory	T_A = -40°C to 105 °C	10	-	-	kcycles
	Cycling (erase / write) EEPROM data memory		300	-	-	
t_{RET}(2)	Data retention (program memory) after 10 kcycles at T_A = 85 °C	T_{RET} = +85 °C	30	-	-	years
	Data retention (EEPROM data memory) after 300 kcycles at T_A = 85 °C		30	-	-	
	Data retention (program memory) after 10 kcycles at T_A = 105 °C	T_{RET} = +105 °C	10	-	-	
	Data retention (EEPROM data memory) after 300 kcycles at T_A = 105 °C		10	-	-	

1. Guaranteed by characterization results.
2. Characterization is done according to JEDEC JESD22-A117.

6.3.10 EMC characteristics

Susceptibility tests are performed on a sample basis during device characterization.

Functional EMS (electromagnetic susceptibility)

While a simple application is executed on the device (toggling 2 LEDs through I/O ports). the device is stressed by two electromagnetic events until a failure occurs. The failure is indicated by the LEDs:

- **Electrostatic discharge (ESD)** (positive and negative) is applied to all device pins until a functional disturbance occurs. This test is compliant with the IEC 61000-4-2 standard.
- **FTB**: A Burst of Fast Transient voltage (positive and negative) is applied to V_{DD} and V_{SS} through a 100 pF capacitor, until a functional disturbance occurs. This test is compliant with the IEC 61000-4-4 standard.

A device reset allows normal operations to be resumed.

The test results are given in *Table 37*. They are based on the EMS levels and classes defined in application note AN1709.

Table 37. EMS characteristics

Symbol	Parameter	Conditions	Level/ Class
V_{FESD}	Voltage limits to be applied on any I/O pin to induce a functional disturbance	V_{DD} = 3.3 V, LQFP144, T_A = +25 °C, f_{HCLK} = 32 MHz conforms to IEC 61000-4-2	4B
V_{EFTB}	Fast transient voltage burst limits to be applied through 100 pF on V_{DD} and V_{SS} pins to induce a functional disturbance	V_{DD} = 3.3 V, LQFP144, T_A = +25 °C, f_{HCLK} = 32 MHz conforms to IEC 61000-4-4	4A

Designing hardened software to avoid noise problems

EMC characterization and optimization are performed at component level with a typical application environment and simplified MCU software. It should be noted that good EMC performance is highly dependent on the user application and the software in particular.

Therefore it is recommended that the user applies EMC software optimization and prequalification tests in relation with the EMC level requested for his application.

Software recommendations

The software flowchart must include the management of runaway conditions such as:

- Corrupted program counter
- Unexpected reset
- Critical data corruption (control registers...)

Prequalification trials

Most of the common failures (unexpected reset and program counter corruption) can be reproduced by manually forcing a low state on the NRST pin or the oscillator pins for 1 second.

To complete these trials, ESD stress can be applied directly on the device, over the range of specification values. When unexpected behavior is detected, the software can be hardened to prevent unrecoverable errors occurring (see application note AN1015).

Electromagnetic Interference (EMI)

The electromagnetic field emitted by the device are monitored while a simple application is executed (toggling 2 LEDs through the I/O ports). This emission test is compliant with IEC 61967-2 standard which specifies the test board and the pin loading.

Table 38. EMI characteristics

Symbol	Parameter	Conditions	Monitored frequency band	Max vs. frequency range			Unit
				4 MHz voltage range 3	16 MHz voltage range 2	32 MHz voltage range 1	
S_{EMI}	Peak level	V_{DD} = 3.6 V, T_A = 25 °C, LQFP144 package compliant with IEC 61967-2	0.1 to 30 MHz	-14	-6	-4	dBµV
			30 to 130 MHz	-11	0	9	
			130 MHz to 1GHz	-7	-1	9	
			SAE EMI Level	1	2	2.5	-

6.3.11 Electrical sensitivity characteristics

Based on three different tests (ESD, LU) using specific measurement methods, the device is stressed in order to determine its performance in terms of electrical sensitivity.

Electrostatic discharge (ESD)

Electrostatic discharges (a positive then a negative pulse separated by 1 second) are applied to the pins of each sample according to each pin combination. The sample size depends on the number of supply pins in the device (3 parts × (n+1) supply pins). This test conforms to the JESD22-A114, ANSI/ESD STM5.3.1. standard.

Table 39. ESD absolute maximum ratings

Symbol	Ratings	Conditions		Class	Maximum value(1)	Unit
$V_{ESD(HBM)}$	Electrostatic discharge voltage (human body model)	T_A = +25 °C, conforming to JESD22-A114		2	2000	V
$V_{ESD(CDM)}$	Electrostatic discharge voltage (charge device model)	T_A = +25 °C, conforming to ANSI/ESD STM5.3.1.	LQFP144 and WLCSP104 packages	C3	250	V
			packages except LQFP144 and WLCSP104	C4	500	

1. Guaranteed by characterization results.

Static latch-up

Two complementary static tests are required on six parts to assess the latch-up performance:

- A supply overvoltage is applied to each power supply pin
- A current injection is applied to each input, output and configurable I/O pin

These tests are compliant with EIA/JESD 78A IC latch-up standard.

Table 40. Electrical sensitivities

Symbol	Parameter	Conditions	Class
LU	Static latch-up class	T_A = +105 °C conforming to JESD78A	II level A

6.3.12 I/O current injection characteristics

As a general rule, current injection to the I/O pins, due to external voltage below V_{SS} or above V_{DD} (for standard pins) should be avoided during normal product operation. However, in order to give an indication of the robustness of the microcontroller in cases when abnormal injection accidentally happens, susceptibility tests are performed on a sample basis during device characterization.

Functional susceptibility to I/O current injection

While a simple application is executed on the device, the device is stressed by injecting current into the I/O pins programmed in floating input mode. While current is injected into the I/O pin, one at a time, the device is checked for functional failures.

The failure is indicated by an out of range parameter: ADC error above a certain limit (higher than 5 LSB TUE), out of conventional limits of induced leakage current on adjacent pins (out of –5 µA/+0 µA range), or other functional failure (for example reset occurrence oscillator frequency deviation, LCD levels).

The test results are given in the *Table 41*.

Table 41. I/O current injection susceptibility

Symbol	Description	Functional susceptibility		Unit
		Negative injection	Positive injection	
I_{INJ}	Injected current on all 5 V tolerant (FT) pins	-5 (1)	NA(2)	mA
	Injected current on BOOT0	-0	NA(2)	
	Injected current on any other pin	-5 (1)	+5	

1. It is recommended to add a Schottky diode (pin to ground) to analog pins which may potentially inject negative currents.
2. Injection is not possible.

6.3.13 I/O port characteristics

General input/output characteristics

Unless otherwise specified, the parameters given in *Table 48* are derived from tests performed under the conditions summarized in *Table 13*. All I/Os are CMOS and TTL compliant.

Table 42. I/O static characteristics

Symbol	Parameter	Conditions	Min	Typ	Max	Unit
V_{IL}	Input low level voltage	TC and FT I/O	-	-	0.3 V_{DD}(1)(2)	V
		BOOT0	-	-	0.14 V_{DD}(2)	
V_{IH}	Input high level voltage	TC I/O	0.45 V_{DD}+0.38(2)	-	-	
		FT I/O	0.39 V_{DD}+0.59(2)	-	-	
		BOOT0	0.15 V_{DD}+0.56(2)	-	-	
V_{hys}	I/O Schmitt trigger voltage hysteresis(2)	TC and FT I/O	-	10% V_{DD}(3)	-	
		BOOT0	-	0.01	-	
I_{lkg}	Input leakage current (4)	$V_{SS} \leq V_{IN} \leq V_{DD}$ I/Os with LCD	-	-	±50	nA
		$V_{SS} \leq V_{IN} \leq V_{DD}$ I/Os with analog switches	-	-	±50	
		$V_{SS} \leq V_{IN} \leq V_{DD}$ I/Os with analog switches and LCD	-	-	±50	
		$V_{SS} \leq V_{IN} \leq V_{DD}$ I/Os with USB	-	-	±250	
		$V_{SS} \leq V_{IN} \leq V_{DD}$ TC and FT I/Os	-	-	±50	
		FT I/O $V_{DD} \leq V_{IN} \leq 5V$	-	-	±10	µA
R_{PU}	Weak pull-up equivalent resistor(5)(1)	$V_{IN} = V_{SS}$	25	45	65	kΩ
R_{PD}	Weak pull-down equivalent resistor(5)	$V_{IN} = V_{DD}$	25	45	65	kΩ
C_{IO}	I/O pin capacitance	-	-	5	-	pF

1. Guaranteed by test in production.
2. Guaranteed by design.
3. With a minimum of 200 mV.
4. The max. value may be exceeded if negative current is injected on adjacent pins.
5. Pull-up and pull-down resistors are designed with a true resistance in series with a switchable PMOS/NMOS. This MOS/NMOS contribution to the series resistance is minimum (~10% order).

Output driving current

The GPIOs (general purpose input/outputs) can sink or source up to ±8 mA, and sink or source up to ±20 mA with the non-standard V_{OL}/V_{OH} specifications given in *Table 43*.

In the user application, the number of I/O pins which can drive current must be limited to respect the absolute maximum rating specified in *Section 6.2*:

- The sum of the currents sourced by all the I/Os on $V_{DD,}$ plus the maximum Run consumption of the MCU sourced on $V_{DD,}$ cannot exceed the absolute maximum rating $I_{VDD(\Sigma)}$ (see *Table 11*).
- The sum of the currents sunk by all the I/Os on V_{SS} plus the maximum Run consumption of the MCU sunk on V_{SS} cannot exceed the absolute maximum rating $I_{VSS(\Sigma)}$ (see *Table 11*).

Output voltage levels

Unless otherwise specified, the parameters given in *Table 43* are derived from tests performed under the conditions summarized in *Table 13*. All I/Os are CMOS and TTL compliant.

Table 43. Output voltage characteristics

Symbol	Parameter	Conditions	Min	Max	Unit
V_{OL} (1)(2)	Output low level voltage for an I/O pin	I_{IO} = 8 mA 2.7 V < V_{DD} < 3.6 V	-	0.4	V
V_{OH} (2)(3)	Output high level voltage for an I/O pin		V_{DD}-0.4	-	
V_{OL} (3)(4)	Output low level voltage for an I/O pin	I_{IO} = 4 mA 1.65 V < V_{DD} < 3.6 V	-	0.45	
V_{OH} (3)(4)	Output high level voltage for an I/O pin		V_{DD}-0.45	-	
V_{OL} (1)(4)	Output low level voltage for an I/O pin	I_{IO} = 20 mA 2.7 V < V_{DD} < 3.6 V	-	1.3	
V_{OH} (3)(4)	Output high level voltage for an I/O pin		V_{DD}-1.3	-	

1. The I_{IO} current sunk by the device must always respect the absolute maximum rating specified in *Table 11* and the sum of I_{IO} (I/O ports and control pins) must not exceed I_{VSS}.
2. Guaranteed by test in production.
3. The I_{IO} current sourced by the device must always respect the absolute maximum rating specified in *Table 11* and the sum of I_{IO} (I/O ports and control pins) must not exceed I_{VDD}.
4. Guaranteed by characterization results.

Input/output AC characteristics

The definition and values of input/output AC characteristics are given in *Figure 18* and *Table 44*, respectively.

Unless otherwise specified, the parameters given in *Table 44* are derived from tests performed under the conditions summarized in *Table 13*.

Table 44. I/O AC characteristics(1)

OSPEEDRx [1:0] bit value(1)	Symbol	Parameter	Conditions	Min	Max(2)	Unit
00	$f_{max(IO)out}$	Maximum frequency(3)	C_L = 50 pF, V_{DD} = 2.7 V to 3.6 V	-	400	kHz
			C_L = 50 pF, V_{DD} = 1.65 V to 2.7 V	-	400	
	$t_{f(IO)out}$ $t_{r(IO)out}$	Output rise and fall time	C_L = 50 pF, V_{DD} = 2.7 V to 3.6 V	-	625	ns
			C_L = 50 pF, V_{DD} = 1.65 V to 2.7 V	-	625	
01	$f_{max(IO)out}$	Maximum frequency(3)	C_L = 50 pF, V_{DD} = 2.7 V to 3.6 V	-	2	MHz
			C_L = 50 pF, V_{DD} = 1.65 V to 2.7 V	-	1	
	$t_{f(IO)out}$ $t_{r(IO)out}$	Output rise and fall time	C_L = 50 pF, V_{DD} = 2.7 V to 3.6 V	-	125	ns
			C_L = 50 pF, V_{DD} = 1.65 V to 2.7 V	-	250	
10	$F_{max(IO)out}$	Maximum frequency(3)	C_L = 50 pF, V_{DD} = 2.7 V to 3.6 V	-	10	MHz
			C_L = 50 pF, V_{DD} = 1.65 V to 2.7 V	-	2	
	$t_{f(IO)out}$ $t_{r(IO)out}$	Output rise and fall time	C_L = 50 pF, V_{DD} = 2.7 V to 3.6 V	-	25	ns
			C_L = 50 pF, V_{DD} = 1.65 V to 2.7 V	-	125	
11	$F_{max(IO)out}$	Maximum frequency(3)	C_L = 30 pF, V_{DD} = 2.7 V to 3.6 V	-	50	MHz
			C_L = 50 pF, V_{DD} = 1.65 V to 2.7 V	-	8	
	$t_{f(IO)out}$ $t_{r(IO)out}$	Output rise and fall time	C_L = 30 pF, V_{DD} = 2.7 V to 3.6 V	-	5	ns
			C_L = 50 pF, V_{DD} = 1.65 V to 2.7 V	-	30	
-	t_{EXTIpw}	Pulse width of external signals detected by the EXTI controller	-	8	-	

1. The I/O speed is configured using the OSPEEDRx[1:0] bits. Refer to the STM32L151xx, STM32L152xx and STM32L162xx reference manual for a description of GPIO Port configuration register.
2. Guaranteed by design.
3. The maximum frequency is defined in *Figure 18*.

Figure 18. I/O AC characteristics definition

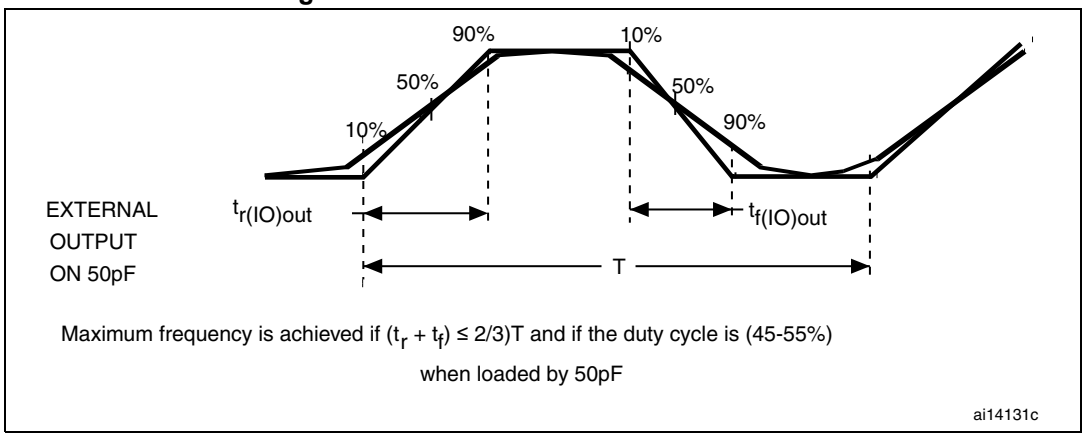

6.3.14 NRST pin characteristics

The NRST pin input driver uses CMOS technology. It is connected to a permanent pull-up resistor, R_{PU} (see *Table 45*)

Unless otherwise specified, the parameters given in *Table 45* are derived from tests performed under the conditions summarized in *Table 13*.

Table 45. NRST pin characteristics

Symbol	Parameter	Conditions	Min	Typ	Max	Unit
$V_{IL(NRST)}$(1)	NRST input low level voltage	-	-	-	0.3 V_{DD}	V
$V_{IH(NRST)}$(1)	NRST input high level voltage	-	0.39V_{DD}+0.59	-	-	
$V_{OL(NRST)}$(1)	NRST output low level voltage	I_{OL} = 2 mA 2.7 V < V_{DD} < 3.6 V	-	-	0.4	
		I_{OL} = 1.5 mA 1.65 V < V_{DD} < 2.7 V	-	-		
$V_{hys(NRST)}$(1)	NRST Schmitt trigger voltage hysteresis	-	-	10%V_{DD}(2)	-	mV
R_{PU}	Weak pull-up equivalent resistor(3)	$V_{IN} = V_{SS}$	25	45	65	kΩ
$V_{F(NRST)}$(1)	NRST input filtered pulse	-	-	-	50	ns
$V_{NF(NRST)}$(3)	NRST input not filtered pulse	-	350	-	-	ns

1. Guaranteed by design.
2. With a minimum of 200 mV.
3. The pull-up is designed with a true resistance in series with a switchable PMOS. This PMOS contribution to the series resistance is around 10%.

Figure 19. Recommended NRST pin protection

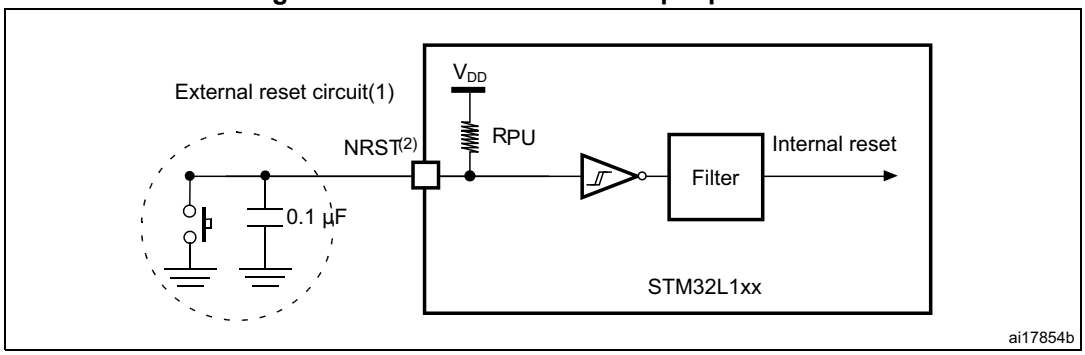

1. The reset network protects the device against parasitic resets. 0.1 uF capacitor must be placed as close as possible to the chip.
2. The user must ensure that the level on the NRST pin can go below the $V_{IL(NRST)}$ max level specified in *Table 45*. Otherwise the reset will not be taken into account by the device.

6.3.15 TIM timer characteristics

The parameters given in the *Table 46* are guaranteed by design.

Refer to *Section 6.3.13: I/O port characteristics* for details on the input/output ction characteristics (output compare, input capture, external clock, PWM output).

Table 46. TIMx(1) characteristics

Symbol	Parameter	Conditions	Min	Max	Unit
$t_{res(TIM)}$	Timer resolution time	-	1	-	$t_{TIMxCLK}$
		$f_{TIMxCLK}$ = 32 MHz	31.25	-	ns
f_{EXT}	Timer external clock frequency on CH1 to CH4	-	0	$f_{TIMxCLK}/2$	MHz
		$f_{TIMxCLK}$ = 32 MHz	0	16	MHz
Res_{TIM}	Timer resolution	-		16	bit
$t_{COUNTER}$	16-bit counter clock period when internal clock is selected (timer's prescaler disabled)	-	1	65536	$t_{TIMxCLK}$
		$f_{TIMxCLK}$ = 32 MHz	0.0312	2048	µs
t_{MAX_COUNT}	Maximum possible count	-	-	65536 × 65536	$t_{TIMxCLK}$
		$f_{TIMxCLK}$ = 32 MHz	-	134.2	s

1. TIMx is used as a general term to refer to the TIM2, TIM3 and TIM4 timers.

6.3.16 Communications interfaces

I²C interface characteristics

The device I²C interface meets the requirements of the standard I²C communication protocol with the following restrictions: SDA and SCL are not “true” open-drain I/O pins. When configured as open-drain, the PMOS connected between the I/O pin and V_{DD} is disabled, but is still present.

The I²C characteristics are described in *Table 47*. Refer also to *Section 6.3.13: I/O port characteristics* for more details on the input/output ction characteristics (SDA and SCL).

Table 47. I²C characteristics

Symbol	Parameter	Standard mode I²C(1)(2)		Fast mode I²C(1)(2)		Unit
		Min	Max	Min	Max	
$t_{w(SCLL)}$	SCL clock low time	4.7	-	1.3	-	µs
$t_{w(SCLH)}$	SCL clock high time	4.0	-	0.6	-	µs
$t_{su(SDA)}$	SDA setup time	250	-	100	-	ns
$t_{h(SDA)}$	SDA data hold time	-	3450(3)	-	900(3)	ns
$t_{r(SDA)}$ $t_{r(SCL)}$	SDA and SCL rise time	-	1000	-	300	ns
$t_{f(SDA)}$ $t_{f(SCL)}$	SDA and SCL fall time	-	300	-	300	ns
$t_{h(STA)}$	Start condition hold time	4.0	-	0.6	-	µs
$t_{su(STA)}$	Repeated Start condition setup time	4.7	-	0.6	-	µs
$t_{su(STO)}$	Stop condition setup time	4.0	-	0.6	-	µs
$t_{w(STO:STA)}$	Stop to Start condition time (bus free)	4.7	-	1.3	-	µs
C_b	Capacitive load for each bus line	-	400	-	400	pF
t_{SP}	Pulse width of spikes that are suppressed by the analog filter	0	50(4)	0	50(4)	ns

1. Guaranteed by design.
2. f_{PCLK1} must be at least 2 MHz to achieve standard mode I²C frequencies. It must be at least 4 MHz to achieve fast mode I²C frequencies. It must be a multiple of 10 MHz to reach the 400 kHz maximum I²C fast mode clock.
3. The maximum Data hold time has only to be met if the interface does not stretch the low period of SCL signal.
4. The minimum width of the spikes filtered by the analog filter is above $t_{SP(max)}$.

Figure 20. I²C bus AC waveforms and measurement circuit

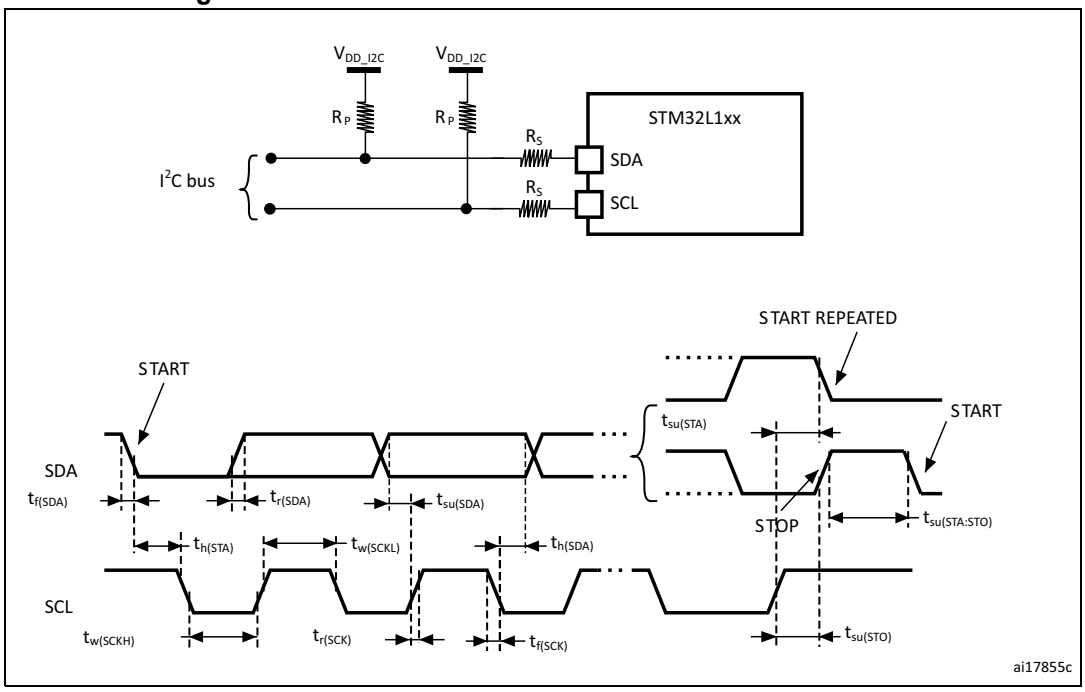

1. R_S = series protection resistor.
2. R_P = external pull-up resistor.
3. V_{DD_I2C} is the I2C bus power supply.
4. Measurement points are done at CMOS levels: $0.3V_{DD}$ and $0.7V_{DD}$.

Table 48. SCL frequency (f_{PCLK1}= 32 MHz, V_{DD} = V_{DD_I2C} = 3.3 V)(1)(2)

f_{SCL} (kHz)	I2C_CCR value
	R_P = 4.7 kΩ
400	0x801B
300	0x8024
200	0x8035
100	0x00A0
50	0x0140
20	0x0320

1. R_P = External pull-up resistance, f_{SCL} = I²C speed.
2. For speeds around 200 kHz, the tolerance on the achieved speed is of ±5%. For other speed ranges, the tolerance on the achieved speed is ±2%. These variations depend on the accuracy of the external components used to design the application.

SPI characteristics

Unless otherwise specified, the parameters given in the following table are derived from tests performed under the conditions summarized in *Table 13*.

Refer to *Section 6.3.12: I/O current injection characteristics* for more details on the input/output alternate function characteristics (NSS, SCK, MOSI, MISO).

Table 49. SPI characteristics(1)

Symbol	Parameter	Conditions	Min	Max(2)	Unit
f_{SCK} $1/t_{c(SCK)}$	SPI clock frequency	Master mode	-	16	MHz
		Slave mode	-	16	
		Slave transmitter	-	12(3)	
$t_{r(SCK)}$(2) $t_{f(SCK)}$(2)	SPI clock rise and fall time	Capacitive load: C = 30 pF	-	6	ns
DuCy(SCK)	SPI slave input clock duty cycle	Slave mode	30	70	%
$t_{su(NSS)}$	NSS setup time	Slave mode	$4t_{HCLK}$	-	ns
$t_{h(NSS)}$	NSS hold time	Slave mode	$2t_{HCLK}$	-	
$t_{w(SCKH)}$(2) $t_{w(SCKL)}$(2)	SCK high and low time	Master mode	$t_{SCK}/2-5$	$t_{SCK}/2+3$	
$t_{su(MI)}$(2)	Data input setup time	Master mode	5	-	
$t_{su(SI)}$(2)		Slave mode	6	-	
$t_{h(MI)}$(2)	Data input hold time	Master mode	5	-	
$t_{h(SI)}$(2)		Slave mode	5	-	
$t_{a(SO)}$(4)	Data output access time	Slave mode	0	$3t_{HCLK}$	
$t_{v(SO)}$ (2)	Data output valid time	Slave mode	-	33	
$t_{v(MO)}$(2)	Data output valid time	Master mode	-	6.5	
$t_{h(SO)}$(2)	Data output hold time	Slave mode	17	-	
$t_{h(MO)}$(2)		Master mode	0.5	-	

1. The characteristics above are given for voltage range 1.
2. Guaranteed by characterization results.
3. The maximum SPI clock frequency in slave transmitter mode is given for an SPI slave input clock duty cycle (DuCy(SCK)) ranging between 40 to 60%.
4. Min time is for the minimum time to drive the output and max time is for the maximum time to validate the data.

Figure 21. SPI timing diagram - slave mode and CPHA = 0

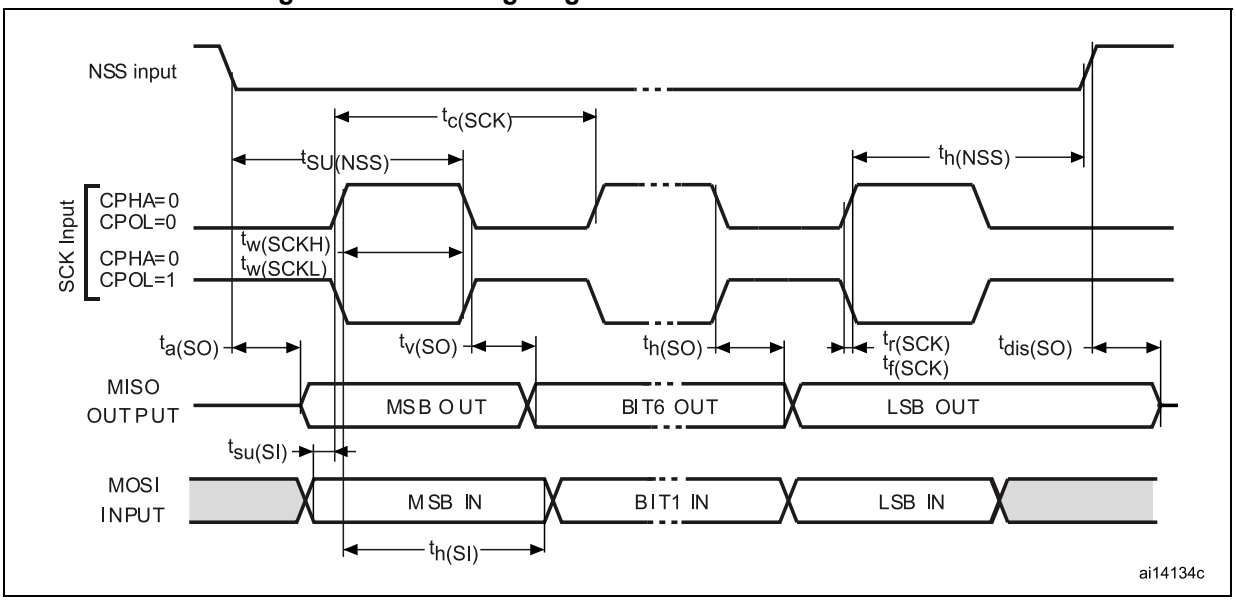

Figure 22. SPI timing diagram - slave mode and CPHA = 1(1)

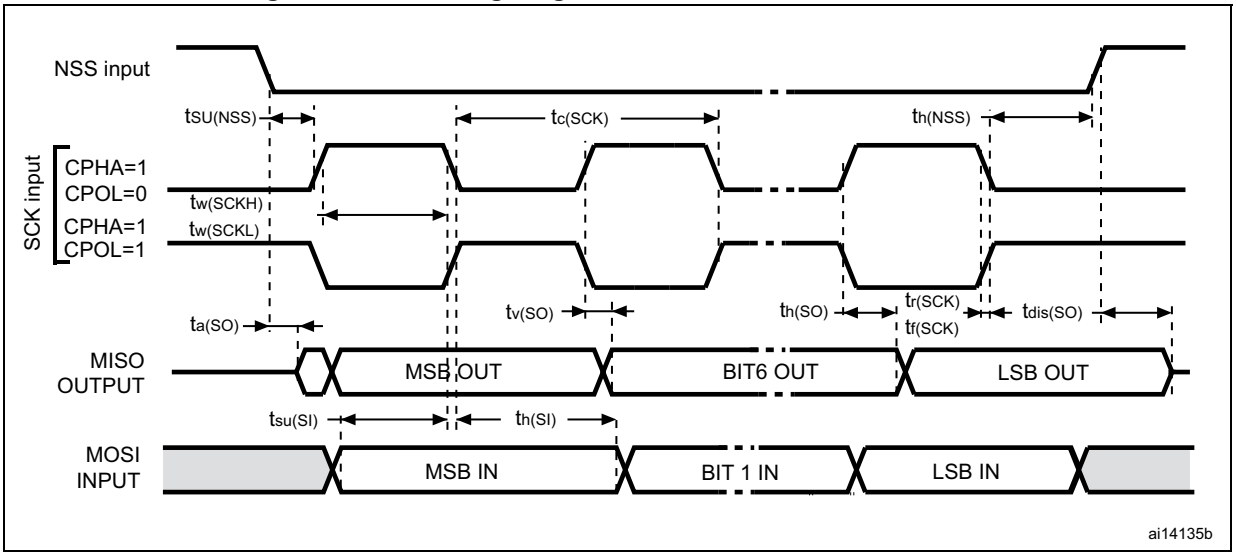

1. Measurement points are done at CMOS levels: $0.3V_{DD}$ and $0.7V_{DD}$.

Figure 23. SPI timing diagram - master mode(1)

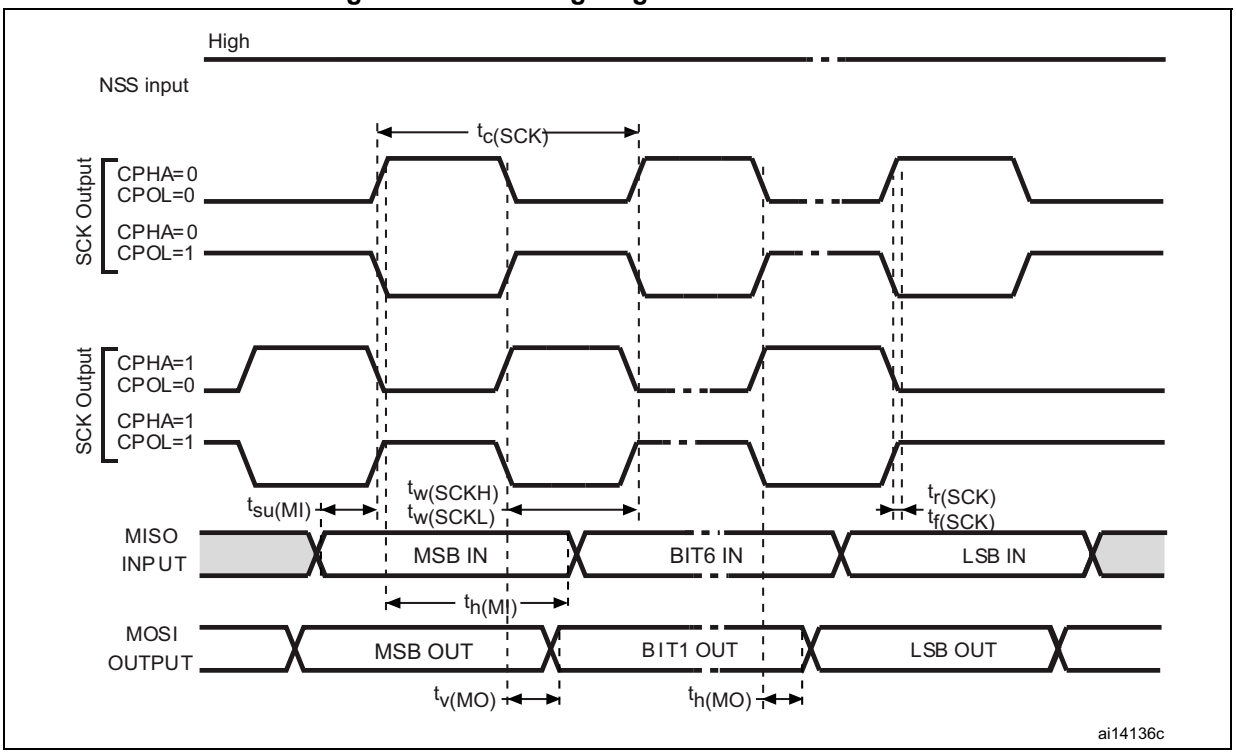

1. Measurement points are done at CMOS levels: $0.3V_{DD}$ and $0.7V_{DD}$.

USB characteristics

The USB interface is USB-IF certified (full speed).

Table 50. USB startup time

Symbol	Parameter	Max	Unit
$t_{STARTUP}$(1)	USB transceiver startup time	1	µs

1. Guaranteed by design.

Table 51. USB DC electrical characteristics

Symbol	Parameter	Conditions	Min.(1)	Max.(1)	Unit
Input levels					
V_{DD}	USB operating voltage	-	3.0	3.6	V
V_{DI}(2)	Differential input sensitivity	I(USB_DP, USB_DM)	0.2	-	V
V_{CM}(2)	Differential common mode range	Includes V_{DI} range	0.8	2.5	
V_{SE}(2)	Single ended receiver threshold	-	1.3	2.0	
Output levels					
V_{OL}(3)	Static output level low	R_L of 1.5 kΩ to 3.6 V(4)	-	0.3	V
V_{OH}(3)	Static output level high	R_L of 15 kΩ to V_{SS}(4)	2.8	3.6	

1. All the voltages are measured from the local ground potential.
2. Guaranteed by characterization results.
3. Guaranteed by test in production.
4. R_L is the load connected on the USB drivers.

Figure 24. USB timings: definition of data signal rise and fall time

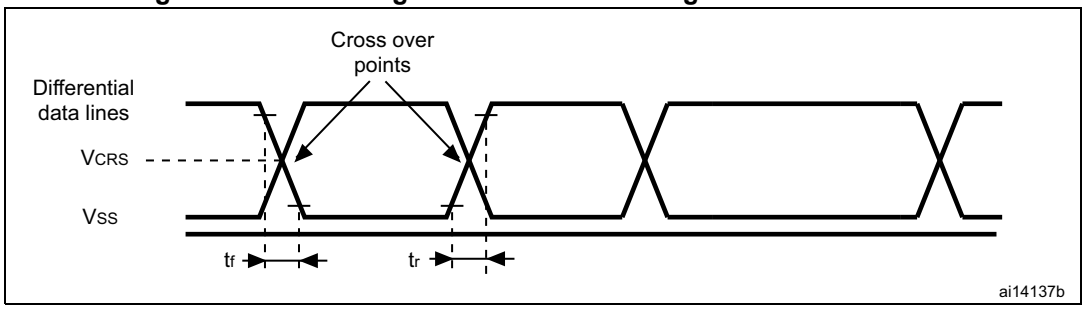

Table 52. USB: full speed electrical characteristics

Driver characteristics(1)					
Symbol	**Parameter**	**Conditions**	**Min**	**Max**	**Unit**
t_r	Rise time(2)	C_L = 50 pF	4	20	ns
t_f	Fall Time(2)	C_L = 50 pF	4	20	ns
t_{rfm}	Rise/ fall time matching	t_r/t_f	90	110	%
V_{CRS}	Output signal crossover voltage		1.3	2.0	V

1. Guaranteed by design.
2. Measured from 10% to 90% of the data signal. For more detailed informations, please refer to USB Specification - Chapter 7 (version 2.0).

I2S characteristics

Table 53. I2S characteristics

Symbol	Parameter	Conditions	Min	Max	Unit
f_{MCK}	I2S Main Clock Output		256 x 8K	256xFs (1)	MHz
f_{CK}	I2S clock frequency	Master data: 32 bits	-	64xFs	MHz
		Slave data: 32 bits	-	64xFs	
D_{CK}	I2S clock frequency duty cycle	Slave receiver, 48KHz	30	70	%
$t_{r(CK)}$	I2S clock rise time	Capacitive load CL=30pF	-	8	ns
$t_{f(CK)}$	I2S clock fall time			8	
$t_{v(WS)}$	WS valid time	Master mode	4	24	
$t_{h(WS)}$	WS hold time	Master mode	0	-	
$t_{su(WS)}$	WS setup time	Slave mode	15	-	
$t_{h(WS)}$	WS hold time	Slave mode	0	-	
$t_{su(SD_MR)}$	Data input setup time	Master receiver	8	-	
$t_{su(SD_SR)}$	Data input setup time	Slave receiver	9	-	
$t_{h(SD_MR)}$	Data input hold time	Master receiver	5	-	
$t_{h(SD_SR)}$		Slave receiver	4	-	
$t_{v(SD_ST)}$	Data output valid time	Slave transmitter (after enable edge)	-	64	
$t_{h(SD_ST)}$	Data output hold time	Slave transmitter (after enable edge)	22	-	
$t_{v(SD_MT)}$	Data output valid time	Master transmitter (after enable edge)	-	12	
$t_{h(SD_MT)}$	Data output hold time	Master transmitter (after enable edge)	8	-	

1. The maximum for 256xFs is 8 MHz

*Note: Refer to the I2S section of the product reference manual for more details about the sampling frequency (Fs), f_{MCK}, f_{CK} and D_{CK} values. These values reflect only the digital peripheral behavior, source clock precision might slightly change them. DCK depends mainly on the ODD bit value, digital contribution leads to a min of (I2SDIV/(2*I2SDIV+ODD) and a max of (I2SDIV+ODD)/(2*I2SDIV+ODD). Fs max is supported for each mode/condition.*

Figure 25. I²S slave timing diagram (Philips protocol)(1)

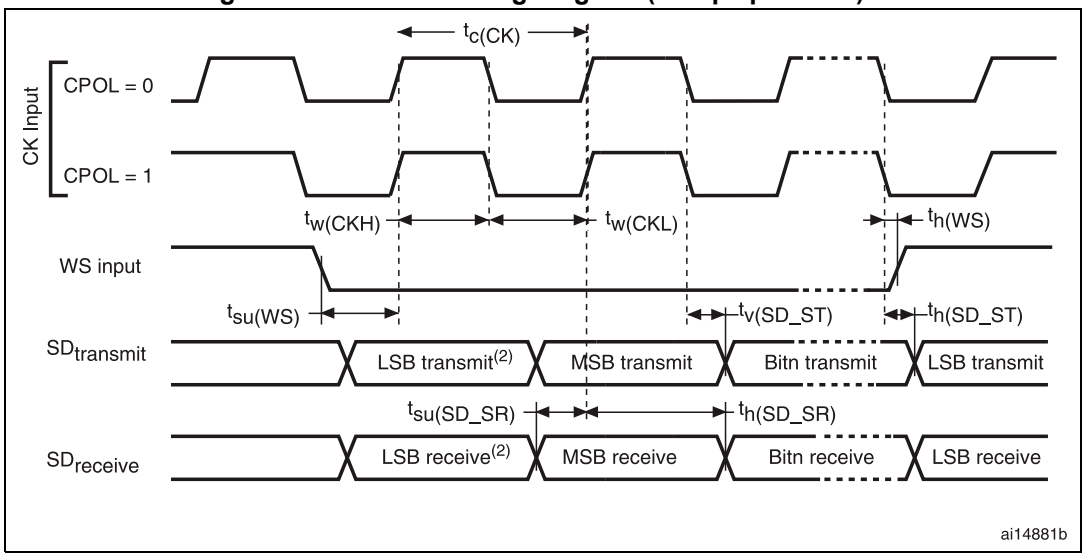

1. Measurement points are done at CMOS levels: $0.3 \times V_{DD}$ and $0.7 \times V_{DD}$.
2. LSB transmit/receive of the previously transmitted byte. No LSB transmit/receive is sent before the first byte.

Figure 26. I²S master timing diagram (Philips protocol)(1)

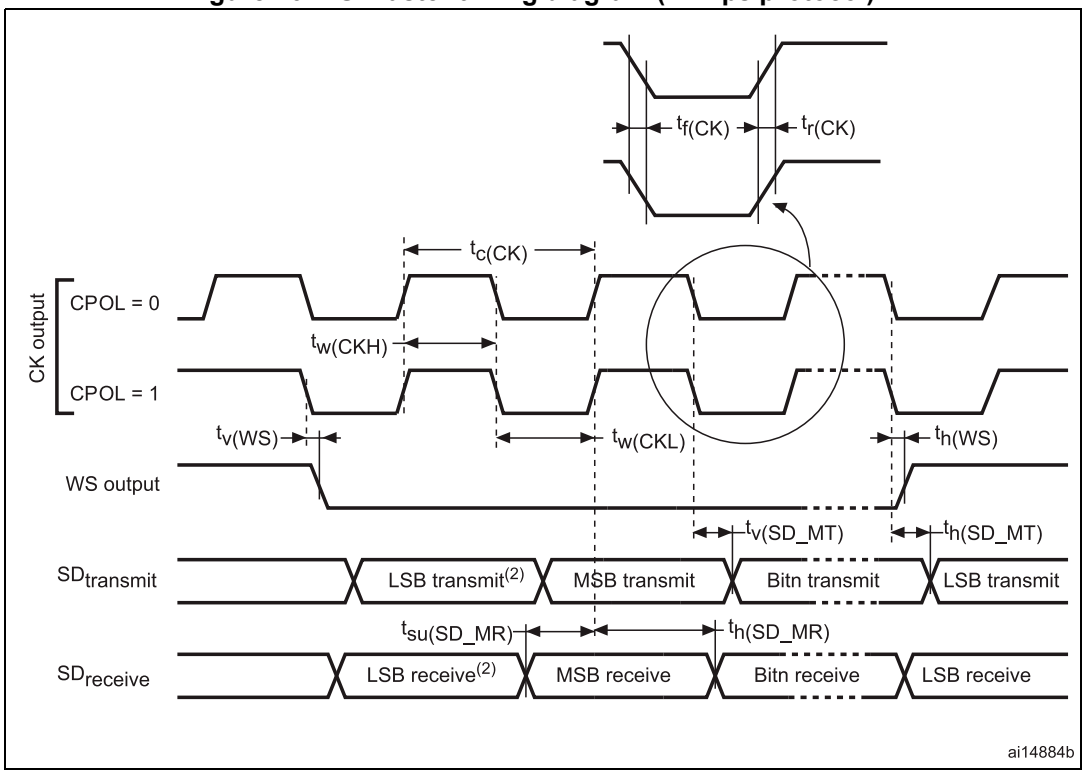

1. Guaranteed by characterization results.
2. LSB transmit/receive of the previously transmitted byte. No LSB transmit/receive is sent before the first byte.

6.3.17 12-bit ADC characteristics

Unless otherwise specified, the parameters given in *Table 55* are guaranteed by design.

Table 54. ADC clock frequency

Symbol	Parameter	Conditions			Min	Max	Unit
f_{ADC}	ADC clock frequency	Voltage range 1 & 2	2.4 V ≤V_{DDA} ≤3.6 V	V_{REF+} = V_{DDA}	0.480	16	MHz
				V_{REF+} < V_{DDA} V_{REF+} > 2.4 V		8	
				V_{REF+} < V_{DDA} V_{REF+} ≤2.4 V		4	
			1.8 V ≤V_{DDA} ≤2.4 V	V_{REF+} = V_{DDA}		8	
				V_{REF+} < V_{DDA}		4	
		Voltage range 3				4	

Table 55. ADC characteristics

Symbol	Parameter	Conditions	Min	Typ	Max	Unit
V_{DDA}	Power supply	-	1.8	-	3.6	V
V_{REF+}	Positive reference voltage	-	1.8(1)	-	V_{DDA}	
V_{REF-}	Negative reference voltage	-	-	V_{SSA}	-	
I_{VDDA}	Current on the V_{DDA} input pin	-	-	1000	1450	µA
I_{VREF}(2)	Current on the V_{REF} input pin	Peak	-	400	700	
		Average	-		450	
V_{AIN}	Conversion voltage range(3)	-	0(4)	-	V_{REF+}	V
f_S	12-bit sampling rate	Direct channels	-	-	1	Msps
		Multiplexed channels	-	-	0.76	
	10-bit sampling rate	Direct channels	-	-	1.07	Msps
		Multiplexed channels	-	-	0.8	
	8-bit sampling rate	Direct channels	-	-	1.23	Msps
		Multiplexed channels	-	-	0.89	
	6-bit sampling rate	Direct channels	-	-	1.45	Msps
		Multiplexed channels	-	-	1	

Table 55. ADC characteristics (continued)

Symbol	Parameter	Conditions	Min	Typ	Max	Unit
t_S(5)	Sampling time	Direct channels 2.4 V ≤V_{DDA} ≤3.6 V	0.25	-	-	µs
		Multiplexed channels 2.4 V ≤V_{DDA} ≤3.6 V	0.56	-	-	
		Direct channels 1.8 V ≤V_{DDA} ≤2.4 V	0.56	-	-	
		Multiplexed channels 1.8 V ≤V_{DDA} ≤2.4 V	1	-	-	
		-	4	-	384	$1/f_{ADC}$
t_{CONV}	Total conversion time (including sampling time)	f_{ADC} = 16 MHz	1	-	24.75	µs
		-	4 to 384 (sampling phase) +12 (successive approximation)			$1/f_{ADC}$
C_{ADC}	Internal sample and hold capacitor	Direct channels	-	16	-	pF
		Multiplexed channels	-		-	
f_{TRIG}	External trigger frequency Regular sequencer	12-bit conversions	-	-	Tconv+1	$1/f_{ADC}$
		6/8/10-bit conversions	-	-	Tconv	$1/f_{ADC}$
f_{TRIG}	External trigger frequency Injected sequencer	12-bit conversions	-	-	Tconv+2	$1/f_{ADC}$
		6/8/10-bit conversions	-	-	Tconv+1	$1/f_{ADC}$
R_{AIN}(6)	Signal source impedance		-	-	50	kΩ
t_{lat}	Injection trigger conversion latency	f_{ADC} = 16 MHz	219	-	281	ns
		-	3.5	-	4.5	$1/f_{ADC}$
t_{latr}	Regular trigger conversion latency	f_{ADC} = 16 MHz	156	-	219	ns
		-	2.5	-	3.5	$1/f_{ADC}$
t_{STAB}	Power-up time	-	-	-	3.5	µs

1. The Vref+ input can be grounded if neither the ADC nor the DAC are used (this allows to shut down an external voltage reference).
2. The current consumption through VREF is composed of two parameters:

   - one constant (max 300 µA)

   - one variable (max 400 µA), only during sampling time + 2 first conversion pulses

   So, peak consumption is 300+400 = 700 µA and average consumption is 300 + [(4 sampling + 2) /16] x 400 = 450 µA at 1Msps
3. V_{REF+} can be internally connected to V_{DDA} and V_{REF-} can be internally connected to V_{SSA}, depending on the package. Refer to *Section 4: Pin descriptions* for further details.
4. V_{SSA} or V_{REF-} must be tied to ground.
5. Minimum sampling time is reached for an external input impedance limited to a value as defined in *Table 57: Maximum source impedance RAIN max*.
6. External impedance has another high value limitation when using short sampling time as defined in *Table 57: Maximum source impedance RAIN max*.

Table 56. ADC accuracy(1)(2)

Symbol	Parameter	Test conditions	Min(3)	Typ	Max(3)	Unit
ET	Total unadjusted error	2.4 V ≤V_{DDA} ≤ 3.6 V 2.4 V ≤V_{REF+} ≤ 3.6 V f_{ADC} = 8 MHz, R_{AIN} = 50 Ω T_A = -40 to 105 °C	-	2.5	4	LSB
EO	Offset error		-	1	2	
EG	Gain error		-	1.5	3.5	
ED	Differential linearity error		-	1	2	
EL	Integral linearity error		-	2.2	3	
ENOB	Effective number of bits	2.4 V ≤V_{DDA} ≤ 3.6 V V_{DDA} = V_{REF+} f_{ADC} = 16 MHz, R_{AIN} = 50 Ω T_A = -40 to 105 °C F_{input}=10kHz	9.2	10	-	bits
SINAD	Signal-to-noise and distortion ratio		57.5	62	-	dB
SNR	Signal-to-noise ratio		57.5	62	-	
THD	Total harmonic distortion		-	-70	-65	
ENOB	Effective number of bits	1.8 V ≤V_{DDA} ≤ 2.4 V V_{DDA} = V_{REF+} f_{ADC} = 8 MHz or 4 MHz, R_{AIN} = 50 Ω T_A = -40 to 105 °C F_{input}=10kHz	9.2	10	-	bits
SINAD	Signal-to-noise and distortion ratio		57.5	62	-	dB
SNR	Signal-to-noise ratio		57.5	62	-	
THD	Total harmonic distortion		-	-70	-65	
ET	Total unadjusted error	2.4 V ≤V_{DDA} ≤ 3.6 V 1.8 V ≤V_{REF+} ≤ 2.4 V f_{ADC} = 4 MHz, R_{AIN} = 50 Ω T_A = -40 to 105 °C	-	4	6.5	LSB
EO	Offset error		-	1.5	4	
EG	Gain error		-	3.5	6	
ED	Differential linearity error		-	1	2	
EL	Integral linearity error		-	2.5	3	
ET	Total unadjusted error	1.8 V ≤V_{DDA} ≤ 2.4 V 1.8 V ≤V_{REF+} ≤ 2.4 V f_{ADC} = 4 MHz, R_{AIN} = 50 Ω T_A = -40 to 105 °C	-	2	3	LSB
EO	Offset error		-	1	1.5	
EG	Gain error		-	1.5	2	
ED	Differential linearity error		-	1	2	
EL	Integral linearity error		-	2.2	3	

1. ADC DC accuracy values are measured after internal calibration.
2. ADC accuracy vs. negative injection current: Injecting a negative current on any analog input pins should be avoided as this significantly reduces the accuracy of the conversion being performed on another analog input. It is recommended to add a Schottky diode (pin to ground) to analog pins which may potentially inject negative currents.
Any positive injection current within the limits specified for $I_{INJ(PIN)}$ and $\Sigma I_{INJ(PIN)}$ in *Section 6.3.12* does not affect the ADC accuracy.
3. Guaranteed by characterization results.

Figure 27. ADC accuracy characteristics

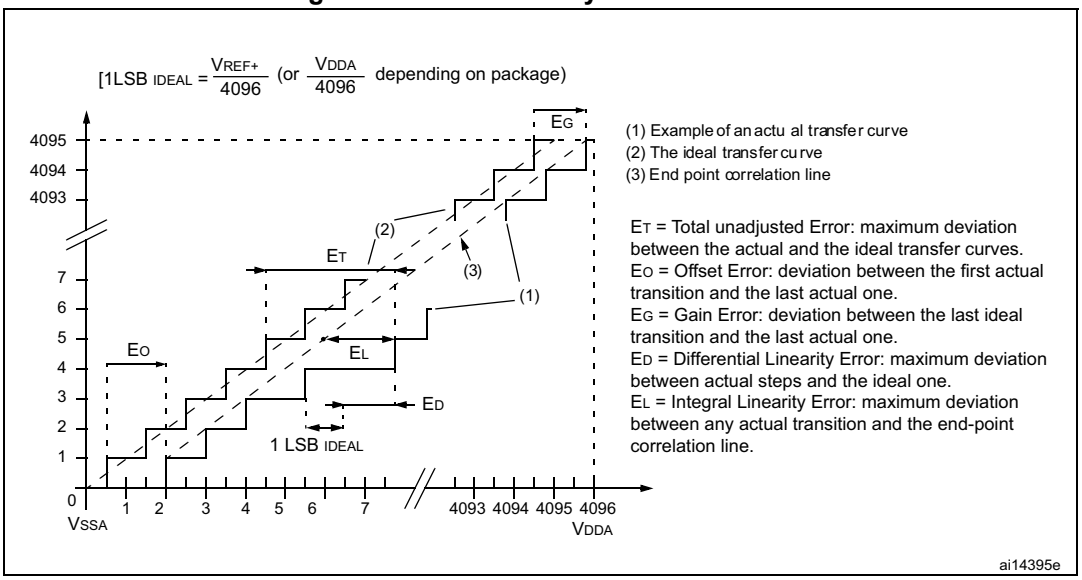

Figure 28. Typical connection diagram using the ADC

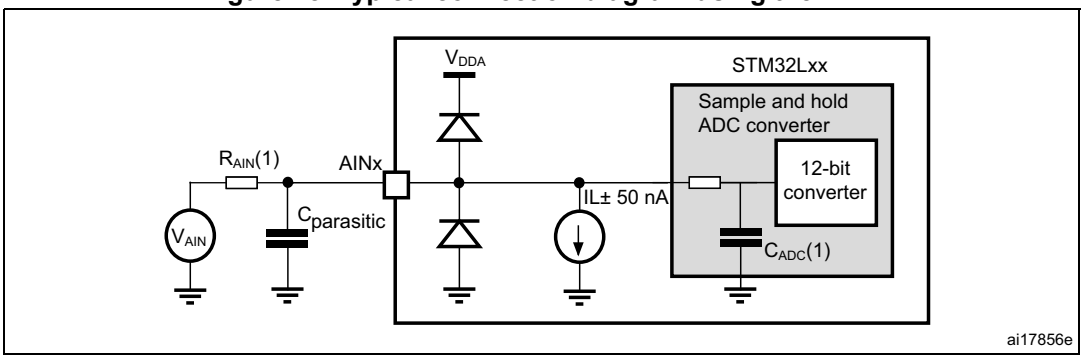

1. Refer to *Table 57: Maximum source impedance RAIN max* for the value of R_{AIN} and *Table 55: ADC characteristics* for the value of C_{ADC}.
2. $C_{parasitic}$ represents the capacitance of the PCB (dependent on soldering and PCB layout quality) plus the pad capacitance (roughly 7 pF). A high $C_{parasitic}$ value will downgrade conversion accuracy. To remedy this, f_{ADC} should be reduced.

Figure 29. Maximum dynamic current consumption on V_{REF+} supply pin during ADC conversion

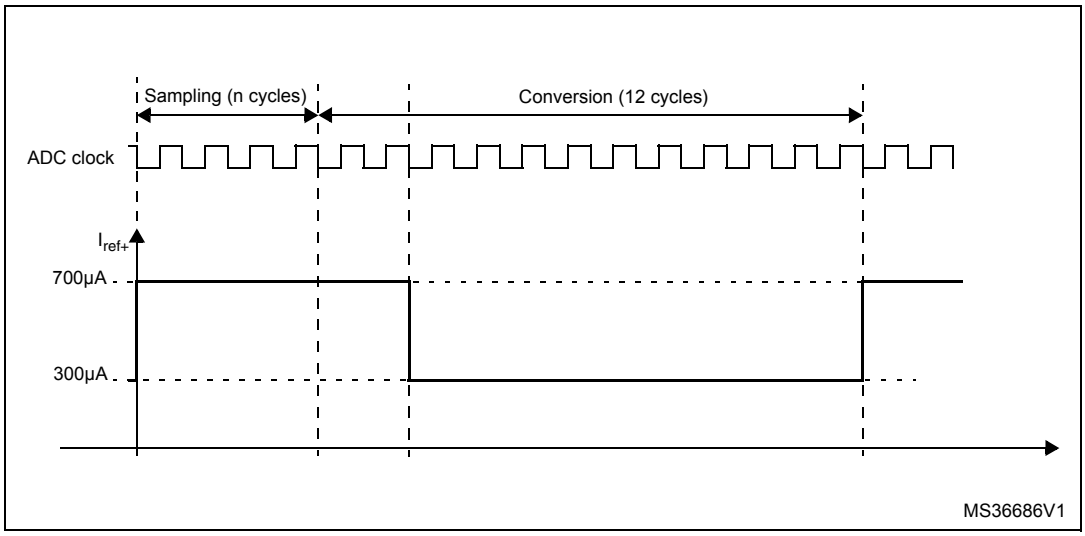

Table 57. Maximum source impedance R_{AIN} max(1)

Ts (µs)	R_{AIN} max (kΩ)				Ts (cycles) f_{ADC}=16 MHz(2)
	Multiplexed channels		Direct channels		
	2.4 V < V_{DDA} < 3.6 V	1.8 V < V_{DDA} < 2.4 V	2.4 V < V_{DDA} < 3.6 V	1.8 V < V_{DDA} < 2.4 V	
0.25	Not allowed	Not allowed	0.7	Not allowed	4
0.5625	0.8	Not allowed	2.0	1.0	9
1	2.0	0.8	4.0	3.0	16
1.5	3.0	1.8	6.0	4.5	24
3	6.8	4.0	15.0	10.0	48
6	15.0	10.0	30.0	20.0	96
12	32.0	25.0	50.0	40.0	192
24	50.0	50.0	50.0	50.0	384

1. Guaranteed by design.
2. Number of samples calculated for f_{ADC} = 16 MHz. For f_{ADC} = 8 and 4 MHz the number of sampling cycles can be reduced with respect to the minimum sampling time Ts (µs),

General PCB design guidelines

Power supply decoupling should be performed as shown in *Figure 11*. The applicable procedure depends on whether V_{REF+} is connected to V_{DDA} or not. The 100 nF capacitors should be ceramic (good quality). They should be placed as close as possible to the chip.

6.3.18 DAC electrical specifications

Data guaranteed by design, unless otherwise specified.

Table 58. DAC characteristics

Symbol	Parameter	Conditions		Min	Typ	Max	Unit
V_{DDA}	Analog supply voltage	-		1.8	-	3.6	V
V_{REF+}	Reference supply voltage	V_{REF+} must always be below V_{DDA}		1.8	-	3.6	V
V_{REF-}	Lower reference voltage	-		V_{SSA}			V
$I_{DDVREF+}$(1)	Current consumption on V_{REF+} supply V_{REF+} = 3.3 V	No load, middle code (0x800)		-	130	220	µA
		No load, worst code (0x000)		-	220	350	µA
I_{DDA}(1)	Current consumption on V_{DDA} supply V_{DDA} = 3.3 V	No load, middle code (0x800)		-	210	320	µA
		No load, worst code (0xF1C)		-	320	520	µA
R_L	Resistive load	DAC output buffer ON	Connected to V_{SSA}	5	-	-	kΩ
			Conected to V_{DDA}	25	-	-	kΩ
C_L(2)	Capacitive load	DAC output buffer ON		-	-	50	pF
R_O	Output impedance	DAC output buffer OFF		12	16	20	kΩ
V_{DAC_OUT}	Voltage on DAC_OUT output	DAC output buffer ON		0.2	-	V_{DDA} – 0.2	V
		DAC output buffer OFF		0.5	-	V_{REF+} – 1LSB	mV
DNL(1)	Differential non linearity(3)	$C_L \leq 50$ pF, $R_L \geq 5$ kΩ DAC output buffer ON		-	1.5	3	LSB
		No R_L, $C_L \leq 50$ pF DAC output buffer OFF		-	1.5	3	LSB
INL(1)	Integral non linearity(4)	$C_L \leq 50$ pF, $R_L \geq 5$ kΩ DAC output buffer ON		-	2	4	LSB
		No R_L, $C_L \leq 50$ pF DAC output buffer OFF		-	2	4	LSB
Offset(1)	Offset error at code 0x800 (5)	$C_L \leq 50$ pF, $R_L \geq 5$ kΩ DAC output buffer ON		-	±10	±25	LSB
		No R_L, $C_L \leq 50$ pF DAC output buffer OFF		-	±5	±8	LSB
Offset1(1)	Offset error at code 0x001(6)	No R_L, $C_L \leq 50$ pF DAC output buffer OFF		-	±1.5	±5	LSB

Table 58. DAC characteristics (continued)

Symbol	Parameter	Conditions	Min	Typ	Max	Unit
dOffset/dT(1)	Offset error temperature coefficient (code 0x800)	V_{DDA} = 3.3V V_{REF+} = 3.0V T_A = 0 to 50 °C DAC output buffer OFF	-20	-10	0	µV/°C
		V_{DDA} = 3.3V V_{REF+} = 3.0V T_A = 0 to 50 °C DAC output buffer ON	0	20	50	
Gain(1)	Gain error(7)	$C_L \leq 50$ pF, $R_L \geq 5$ kΩ DAC output buffer ON	-	+0.1 / -0.2%	+0.2 / -0.5%	%
		No R_L, $C_L \leq 50$ pF DAC output buffer OFF	-	+0 / -0.2%	+0 / -0.4%	
dGain/dT(1)	Gain error temperature coefficient	V_{DDA} = 3.3V V_{REF+} = 3.0V T_A = 0 to 50 °C DAC output buffer OFF	-10	-2	0	µV/°C
		V_{DDA} = 3.3V V_{REF+} = 3.0V T_A = 0 to 50 °C DAC output buffer ON	-40	-8	0	
TUE(1)	Total unadjusted error	$C_L \leq 50$ pF, $R_L \geq 5$ kΩ DAC output buffer ON	-	12	30	LSB
		No R_L, $C_L \leq 50$ pF DAC output buffer OFF	-	8	12	
$t_{SETTLING}$	Settling time (full scale: for a 12-bit code transition between the lowest and the highest input codes till DAC_OUT reaches final value ±1LSB	$C_L \leq 50$ pF, $R_L \geq 5$ kΩ	-	7	12	µs
Update rate	Max frequency for a correct DAC_OUT change (95% of final value) with 1 LSB variation in the input code	$C_L \leq 50$ pF, $R_L \geq 5$ kΩ	-	-	1	Msps
t_{WAKEUP}	Wakeup time from off state (setting the ENx bit in the DAC Control register)(8)	$C_L \leq 50$ pF, $R_L \geq 5$ kΩ	-	9	15	µs
PSRR+	V_{DDA} supply rejection ratio (static DC measurement)	$C_L \leq 50$ pF, $R_L \geq 5$ kΩ	-	-60	-35	dB

1. Data based on characterization results.
2. Connected between DAC_OUT and VSSA.
3. Difference between two consecutive codes - 1 LSB.

4. Difference between measured value at Code i and the value at Code i on a line drawn between Code 0 and last Code 4095.
5. Difference between the value measured at Code (0x800) and the ideal value = $V_{REF+}/2$.
6. Difference between the value measured at Code (0x001) and the ideal value.
7. Difference between ideal slope of the transfer function and measured slope computed from code 0x000 and 0xFFF when buffer is OFF, and from code giving 0.2 V and (V_{DDA} – 0.2) V when buffer is ON.
8. In buffered mode, the output can overshoot above the final value for low input code (starting from min value).

Figure 30. 12-bit buffered /non-buffered DAC

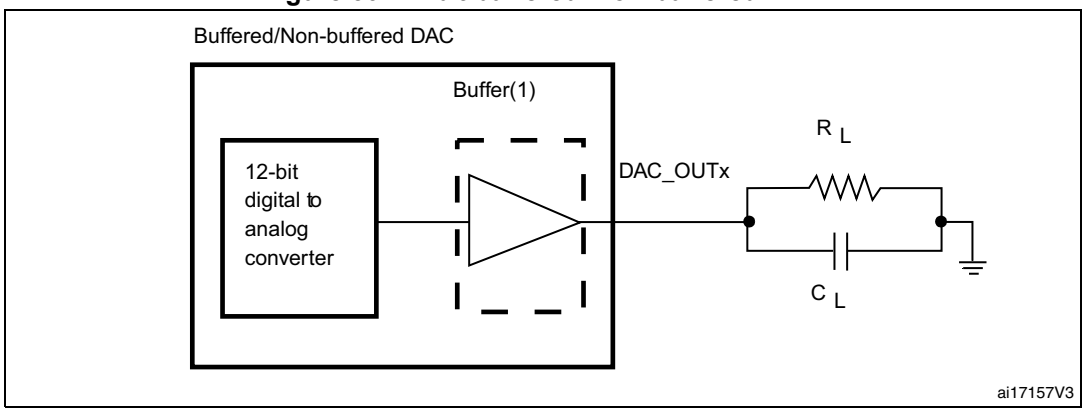

1. The DAC integrates an output buffer that can be used to reduce the output impedance and to drive external loads directly without the use of an external operational amplifier. The buffer can be bypassed by configuring the BOFFx bit in the DAC_CR register.

6.3.19 Operational amplifier characteristics

Table 59. Operational amplifier characteristics

Symbol	Parameter		Condition(1)	Min(2)	Typ	Max(2)	Unit
CMIR	Common mode input range		-	0	-	V_{DD}	
VI_{OFFSET}	Input offset voltage	Maximum calibration range	-	-	-	±15	mV
		After offset calibration	-	-	-	±1.5	
ΔVI_{OFFSET}	Input offset voltage drift	Normal mode	-	-	-	±40	µV/°C
		Low-power mode	-	-	-	±80	
I_{IB}	Input current bias	Dedicated input	75 °C	-	-	1	nA
		General purpose input		-	-	10	
I_{LOAD}	Drive current	Normal mode	-	-	-	500	µA
		Low-power mode	-	-	-	100	
I_{DD}	Consumption	Normal mode	No load, quiescent mode	-	100	220	µA
		Low-power mode		-	30	60	
CMRR	Common mode rejection ration	Normal mode	-	-	-85	-	dB
		Low-power mode	-	-	-90	-	

Table 59. Operational amplifier characteristics (continued)

Symbol	Parameter		Condition(1)	Min(2)	Typ	Max(2)	Unit
PSRR	Power supply rejection ratio	Normal mode	DC	-	-85	-	dB
		Low-power mode		-	-90	-	
GBW	Bandwidth	Normal mode	V_{DD}>2.4 V	400	1000	3000	kHZ
		Low-power mode		150	300	800	
		Normal mode	V_{DD}<2.4 V	200	500	2200	
		Low-power mode		70	150	800	
SR	Slew rate	Normal mode	V_{DD}>2.4 V (between 0.1 V and V_{DD}-0.1 V)	-	700	-	V/ms
		Low-power mode	V_{DD}>2.4 V	-	100	-	
		Normal mode	V_{DD}<2.4 V	-	300	-	
		Low-power mode		-	50	-	
AO	Open loop gain	Normal mode		55	100	-	dB
		Low-power mode		65	110	-	
R_L	Resistive load	Normal mode	V_{DD}<2.4 V	4	-	-	kΩ
		Low-power mode		20	-	-	
C_L	Capacitive load		-	-	-	50	pF
VOH_{SAT}	High saturation voltage	Normal mode	I_{LOAD} = max or R_L = min	V_{DD}-100	-	-	mV
		Low-power mode		V_{DD}-50	-	-	
VOL_{SAT}	Low saturation voltage	Normal mode		-	-	100	
		Low-power mode		-	-	50	
φm	Phase margin		-	-	60	-	°
GM	Gain margin		-	-	-12	-	dB
$t_{OFFTRIM}$	Offset trim time: during calibration, minimum time needed between two steps to have 1 mV accuracy		-	-	1	-	ms
t_{WAKEUP}	Wakeup time	Normal mode	C_L ≤50 pf, R_L ≥ 4 kΩ	-	10	-	µs
		Low-power mode	C_L ≤50 pf, R_L ≥ 20 kΩ	-	30	-	

1. Operating conditions are limited to junction temperature (0 °C to 105 °C) when V_{DD} is below 2 V. Otherwise to the full ambient temperature range (-40 °C to 85 °C, -40 °C to 105 °C).
2. Guaranteed by characterization results.

6.3.20 Temperature sensor characteristics

Table 60. Temperature sensor calibration values

Calibration value name	Description	Memory address
TS_CAL1	TS ADC raw data acquired at temperature of 30 °C ±5 °C V_{DDA}= 3 V ±10 mV	0x1FF8 00FA - 0x1FF8 00FB
TS_CAL2	TS ADC raw data acquired at temperature of 110 °C ±5 °C V_{DDA}= 3 V ±10 mV	0x1FF8 00FE - 0x1FF8 00FF

Table 61. Temperature sensor characteristics

Symbol	Parameter	Min	Typ	Max	Unit
T_L(1)	V_{SENSE} linearity with temperature	-	±1	±2	°C
Avg_Slope(1)	Average slope	1.48	1.61	1.75	mV/°C
V_{110}	Voltage at 110°C ±5°C(2)	612	626.8	641.5	mV
$I_{DDA(TEMP)}$(3)	Current consumption	-	3.4	6	µA
t_{START}(3)	Startup time	-	-	10	µs
T_{S_temp}(3)	ADC sampling time when reading the temperature	4	-	-	

1. Guaranteed by characterization results.
2. Measured at V_{DD} = 3 V ±10 mV. V110 ADC conversion result is stored in the TS_CAL2 byte.
3. Guaranteed by design.

6.3.21 Comparator

Table 62. Comparator 1 characteristics

Symbol	Parameter	Conditions	Min(1)	Typ	Max(1)	Unit
V_{DDA}	Analog supply voltage	-	1.65		3.6	V
R_{400K}	R_{400K} value	-	-	400	-	kΩ
R_{10K}	R_{10K} value	-	-	10	-	
V_{IN}	Comparator 1 input voltage range	-	0.6	-	V_{DDA}	V
t_{START}	Comparator startup time	-	-	7	10	µs
td	Propagation delay(2)	-	-	3	10	
Voffset	Comparator offset	-	-	±3	±10	mV
$d_{Voffset}/dt$	Comparator offset variation in worst voltage stress conditions	V_{DDA} = 3.6 V V_{IN+} = 0 V V_{IN-} = V_{REFINT} T_A = 25 °C	0	1.5	10	mV/1000 h
I_{COMP1}	Current consumption(3)	-	-	160	260	nA

1. Guaranteed by characterization results.
2. The delay is characterized for 100 mV input step with 10 mV overdrive on the inverting input, the non-inverting input set to the reference.
3. Comparator consumption only. Internal reference voltage not included.

Table 63. Comparator 2 characteristics

Symbol	Parameter	Conditions	Min	Typ	Max(1)	Unit
V_{DDA}	Analog supply voltage	-	1.65	-	3.6	V
V_{IN}	Comparator 2 input voltage range	-	0	-	V_{DDA}	V
t_{START}	Comparator startup time	Fast mode	-	15	20	µs
		Slow mode	-	20	25	
$t_{d\ slow}$	Propagation delay(2) in slow mode	1.65 V ≤V_{DDA} ≤2.7 V	-	1.8	3.5	
		2.7 V ≤V_{DDA} ≤3.6 V	-	2.5	6	
$t_{d\ fast}$	Propagation delay(2) in fast mode	1.65 V ≤V_{DDA} ≤2.7 V	-	0.8	2	
		2.7 V ≤V_{DDA} ≤3.6 V	-	1.2	4	
V_{offset}	Comparator offset error		-	±4	±20	mV
dThreshold/ dt	Threshold voltage temperature coefficient	V_{DDA} = 3.3V T_A = 0 to 50 °C V- =V_{REFINT}, 3/4 V_{REFINT}, 1/2 V_{REFINT}, 1/4 V_{REFINT}.	-	15	100	ppm /°C
I_{COMP2}	Current consumption(3)	Fast mode	-	3.5	5	µA
		Slow mode	-	0.5	2	

1. Guaranteed by characterization results.
2. The delay is characterized for 100 mV input step with 10 mV overdrive on the inverting input, the non-inverting input set to the reference.
3. Comparator consumption only. Internal reference voltage (necessary for comparator operation) is not included.

6.3.22 LCD controller

The device embeds a built-in step-up converter to provide a constant LCD reference voltage independently from the V_{DD} voltage. An external capacitor C_{ext} must be connected to the V_{LCD} pin to decouple this converter.

Table 64. LCD controller characteristics

Symbol	Parameter	Min	Typ	Max	Unit
V_{LCD}	LCD external voltage	-	-	3.6	V
V_{LCD0}	LCD internal reference voltage 0	-	2.6	-	
V_{LCD1}	LCD internal reference voltage 1	-	2.73	-	
V_{LCD2}	LCD internal reference voltage 2	-	2.86	-	
V_{LCD3}	LCD internal reference voltage 3	-	2.98	-	
V_{LCD4}	LCD internal reference voltage 4	-	3.12	-	
V_{LCD5}	LCD internal reference voltage 5	-	3.26	-	
V_{LCD6}	LCD internal reference voltage 6	-	3.4	-	
V_{LCD7}	LCD internal reference voltage 7	-	3.55	-	
C_{ext}	V_{LCD} external capacitance	0.1	-	2	µF
I_{LCD}(1)	Supply current at V_{DD} = 2.2 V	-	3.3	-	µA
	Supply current at V_{DD} = 3.0 V	-	3.1	-	
R_{Htot}(2)	Low drive resistive network overall value	5.28	6.6	7.92	MΩ
R_L(2)	High drive resistive network total value	192	240	288	kΩ
V_{44}	Segment/Common highest level voltage	-	-	V_{LCD}	V
V_{34}	Segment/Common 3/4 level voltage	-	3/4 V_{LCD}	-	V
V_{23}	Segment/Common 2/3 level voltage	-	2/3 V_{LCD}	-	
V_{12}	Segment/Common 1/2 level voltage	-	1/2 V_{LCD}	-	
V_{13}	Segment/Common 1/3 level voltage	-	1/3 V_{LCD}	-	
V_{14}	Segment/Common 1/4 level voltage	-	1/4 V_{LCD}	-	
V_0	Segment/Common lowest level voltage	0	-	-	
ΔVxx(3)	Segment/Common level voltage error T_A = -40 to 105 °C	-	-	±50	mV

1. LCD enabled with 3 V internal step-up active, 1/8 duty, 1/4 bias, division ratio= 64, all pixels active, no LCD connected.
2. Guaranteed by design.
3. Guaranteed by characterization results.

7 Package information

In order to meet environmental requirements, ST offers these devices in different grades of ECOPACK® packages, depending on their level of environmental compliance. ECOPACK® specifications, grade definitions and product status are available at: *www.st.com*. ECOPACK® is an ST trademark.

7.1 LQFP144, 20 x 20 mm, 144-pin low-profile quad flat package information

Figure 31. LQFP144, 20 x 20 mm, 144-pin low-profile quad flat package outline

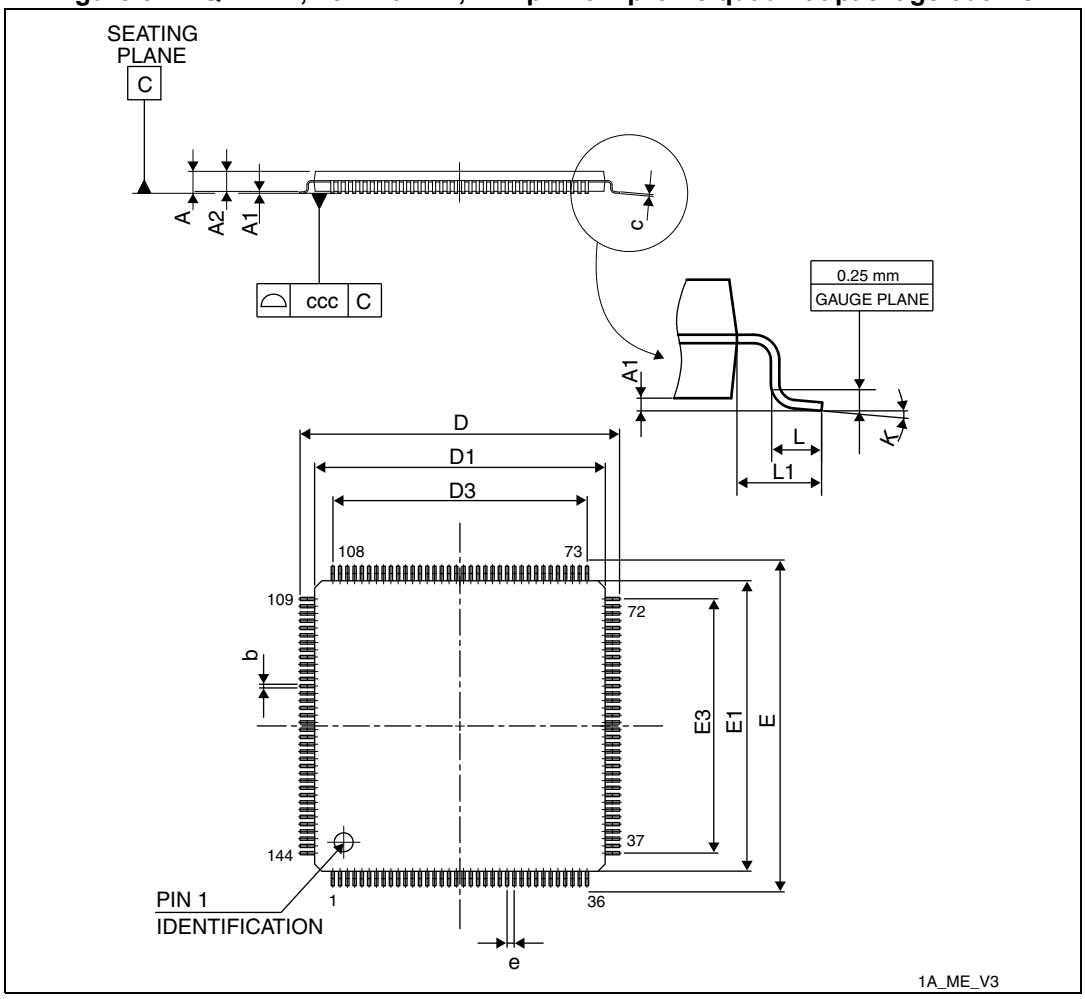

1. Drawing is not to scale.

Table 65. LQFP144, 20 x 20 mm, 144-pin low-profile quad flat package mechanical data

Symbol	millimeters			inches[1]		
	Min	Typ	Max	Min	Typ	Max
A	-	-	1.600	-	-	0.0630
A1	0.050	-	0.150	0.0020	-	0.0059
A2	1.350	1.400	1.450	0.0531	0.0551	0.0571
b	0.170	0.220	0.270	0.0067	0.0087	0.0106
c	0.090	-	0.200	0.0035	-	0.0079
D	21.800	22.000	22.200	0.8583	0.8661	0.8740
D1	19.800	20.000	20.200	0.7795	0.7874	0.7953
D3	-	17.500	-	-	0.6890	-
E	21.800	22.000	22.200	0.8583	0.8661	0.8740
E1	19.800	20.000	20.200	0.7795	0.7874	0.7953
E3	-	17.500	-	-	0.6890	-
e	-	0.500	-	-	0.0197	-
L	0.450	0.600	0.750	0.0177	0.0236	0.0295
L1	-	1.000	-	-	0.0394	-
k	0°	3.5°	7°	0°	3.5°	7°
ccc	-	-	0.080	-	-	0.0031

1. Values in inches are converted from mm and rounded to 4 decimal digits.

Figure 32. LQFP144, 20 x 20 mm, 144-pin low-profile quad flat package recommended footprint

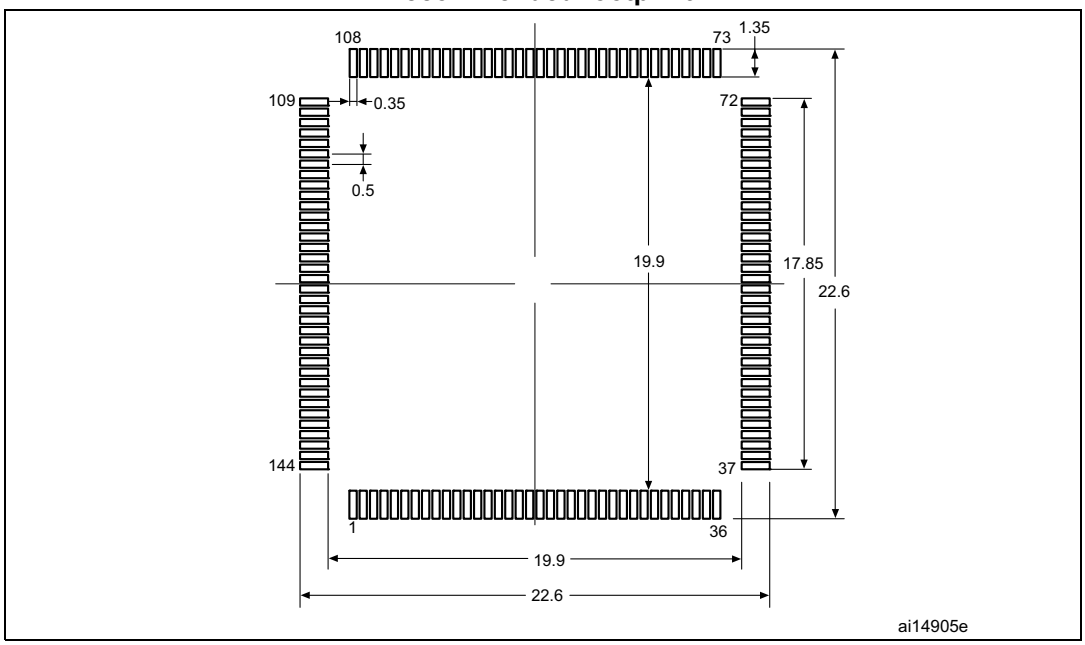

1. Dimensions are in millimeters.

LQFP144 device marking

The following figure gives an example of topside marking orientation versus pin 1 identifier location.

Other optional marking or inset/upset marks, which identify the parts throughout supply chain operations, are not indicated below.

Figure 33. LQFP144, 20 x 20 mm, 144-pin low-profile quad flat package top view example

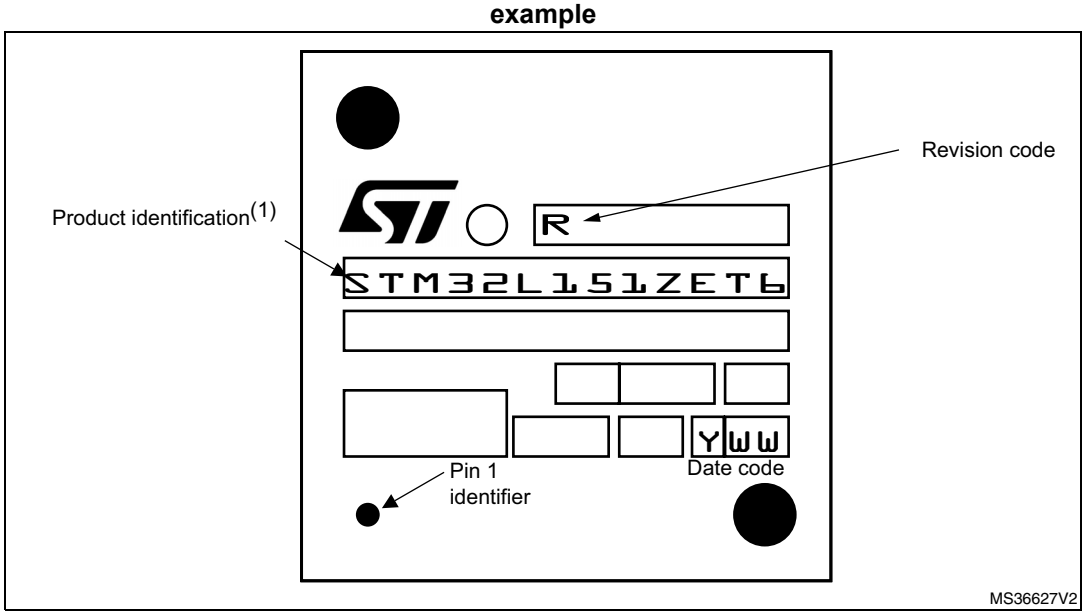

1. Parts marked as ES or E or accompanied by an Engineering sample notification letter are not yet qualified

and therefore not approved for use in production. ST is not responsible for any consequences resulting from such use. In no event will ST be liable for the customer using any of these engineering samples in production. ST's Quality department must be contacted prior to any decision to use these engineering samples to run a qualification activity.

7.2 LQFP100, 14 x 14 mm, 100-pin low-profile quad flat package information

Figure 34. LQFP100, 14 x 14 mm, 100-pin low-profile quad flat package outline

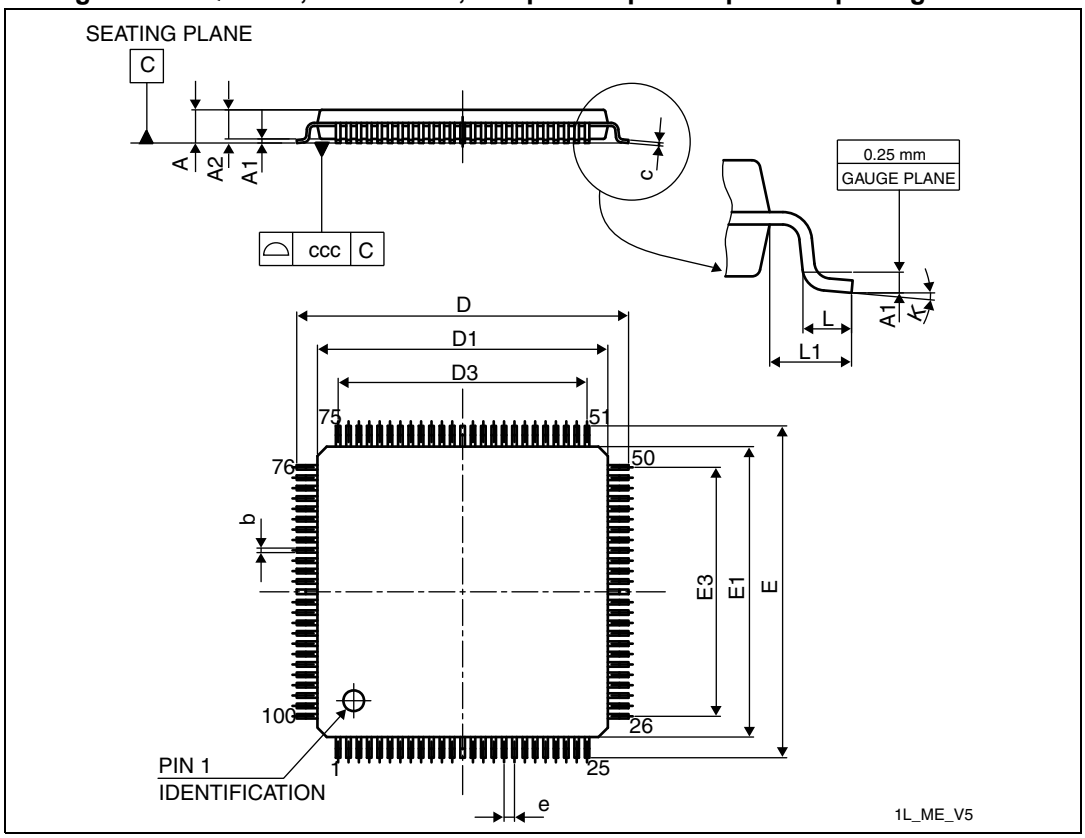

1. Drawing is not to scale.

Table 66. LQPF100, 14 x 14 mm, 100-pin low-profile quad flat package mechanical data

Symbol	millimeters			inches(1)		
	Min	Typ	Max	Min	Typ	Max
A	-	-	1.600	-	-	0.0630
A1	0.050	-	0.150	0.0020	-	0.0059
A2	1.350	1.400	1.450	0.0531	0.0551	0.0571
b	0.170	0.220	0.270	0.0067	0.0087	0.0106
c	0.090	-	0.200	0.0035	-	0.0079
D	15.800	16.000	16.200	0.6220	0.6299	0.6378

Table 66. LQPF100, 14 x 14 mm, 100-pin low-profile quad flat package mechanical data (continued)

Symbol	millimeters			inches[1]		
	Min	Typ	Max	Min	Typ	Max
D1	13.800	14.000	14.200	0.5433	0.5512	0.5591
D3	-	12.000	-	-	0.4724	-
E	15.800	16.000	16.200	0.6220	0.6299	0.6378
E1	13.800	14.000	14.200	0.5433	0.5512	0.5591
E3	-	12.000	-	-	0.4724	-
e	-	0.500	-	-	0.0197	-
L	0.450	0.600	0.750	0.0177	0.0236	0.0295
L1	-	1.000	-	-	0.0394	-
k	0.0°	3.5°	7.0°	0.0°	3.5°	7.0°
ccc	-	-	0.080	-	-	0.0031

1. Values in inches are converted from mm and rounded to 4 decimal digits.

Figure 35. LQFP100, 14 x 14 mm, 100-pin low-profile quad flat package recommended footprint

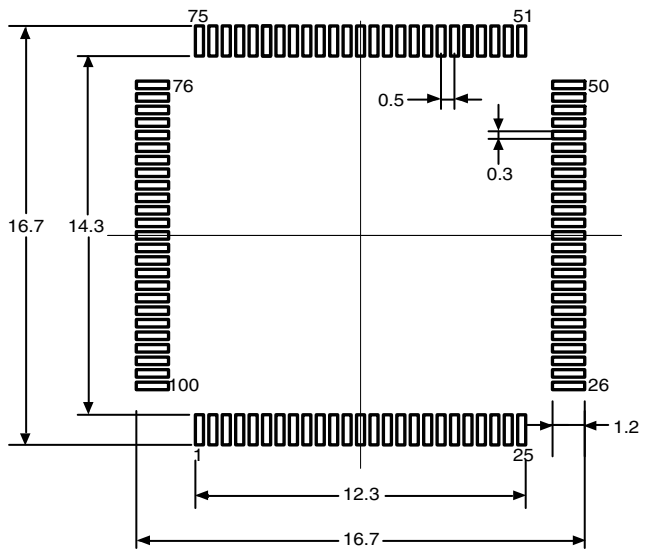

1. Dimensions are in millimeters.

LQFP100 device marking

The following figure gives an example of topside marking orientation versus pin 1 identifier location.

Other optional marking or inset/upset marks, which identify the parts throughout supply chain operations, are not indicated below.

Figure 36. LQFP100, 14 x 14 mm, 100-pin low-profile quad flat package top view example

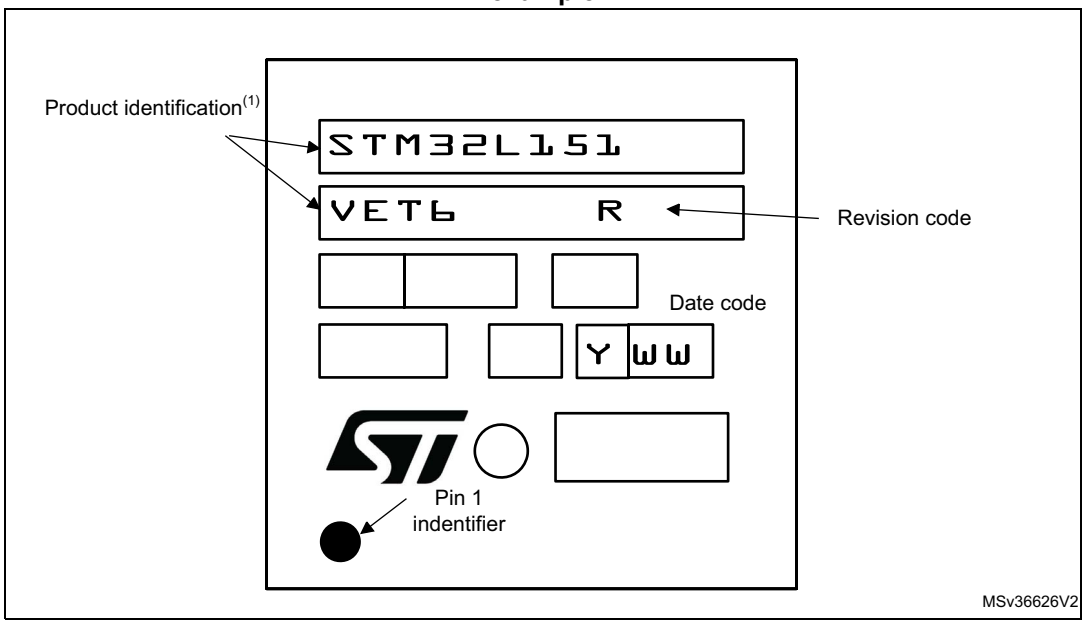

1. Parts marked as ES or E or accompanied by an engineering sample notification letter are not yet qualified and therefore not approved for use in production. ST is not responsible for any consequences resulting from such use. In no event will ST be liable for the customer using any of these engineering samples in production. ST's Quality department must be contacted prior to any decision to use these engineering samples to run a qualification activity.

7.3 LQFP64, 10 x 10 mm, 64-pin low-profile quad flat package information

Figure 37. LQFP64, 10 x 10 mm, 64-pin low-profile quad flat package outline

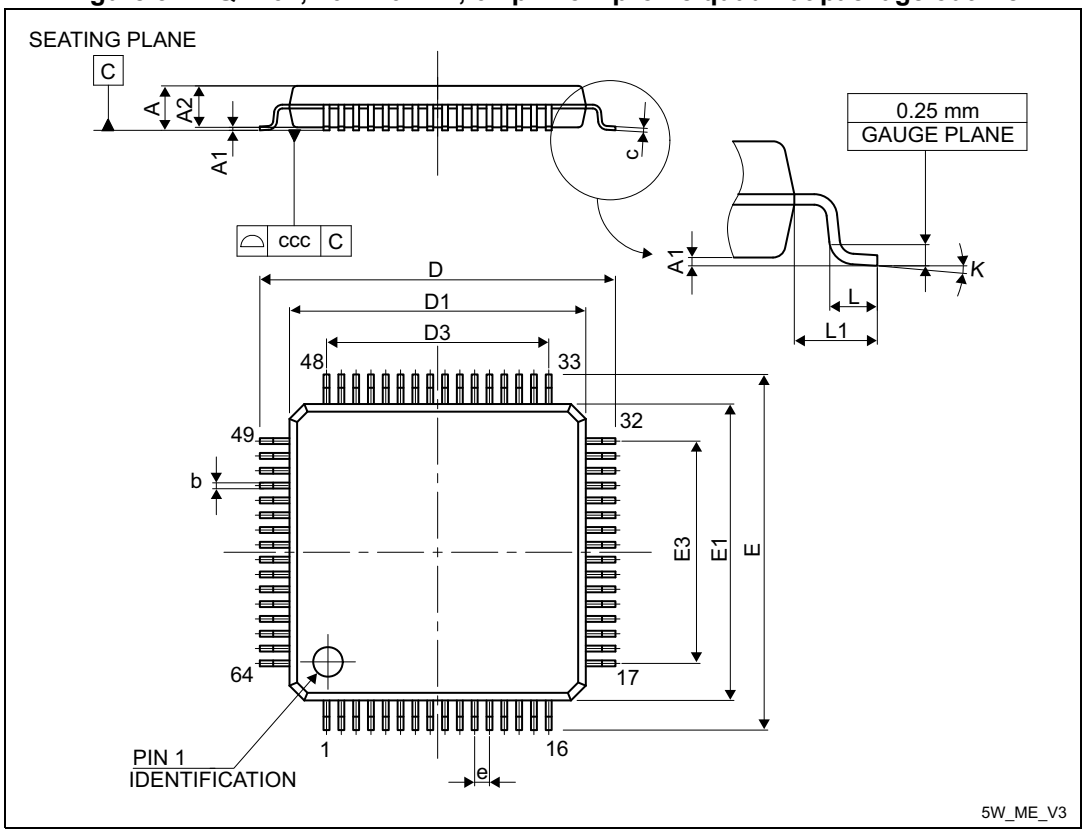

1. Drawing is not to scale.

Table 67. LQFP64, 10 x 10 mm 64-pin low-profile quad flat package mechanical data

Symbol	millimeters			inches(1)		
	Min	Typ	Max	Min	Typ	Max
A	-	-	1.600	-	-	0.0630
A1	0.050	-	0.150	0.0020	-	0.0059
A2	1.350	1.400	1.450	0.0531	0.0551	0.0571
b	0.170	0.220	0.270	0.0067	0.0087	0.0106
c	0.090	-	0.200	0.0035	-	0.0079
D	-	12.000	-	-	0.4724	-
D1	-	10.000	-	-	0.3937	-
D3	-	7.500	-	-	0.2953	-
E	-	12.000	-	-	0.4724	-
E1	-	10.000	-	-	0.3937	-

Table 67. LQFP64, 10 x 10 mm 64-pin low-profile quad flat package mechanical data (continued)

Symbol	millimeters			inches[1]		
	Min	Typ	Max	Min	Typ	Max
E3	-	7.500	-	-	0.2953	-
e	-	0.500	-	-	0.0197	-
K	0°	3.5°	7°	0°	3.5°	7°
L	0.450	0.600	0.750	0.0177	0.0236	0.0295
L1	-	1.000	-	-	0.0394	-
ccc	-	-	0.080	-	-	0.0031

1. Values in inches are converted from mm and rounded to 4 decimal digits.

Figure 38. LQFP64, 10 x 10 mm, 64-pin low-profile quad flat package recommended footprint

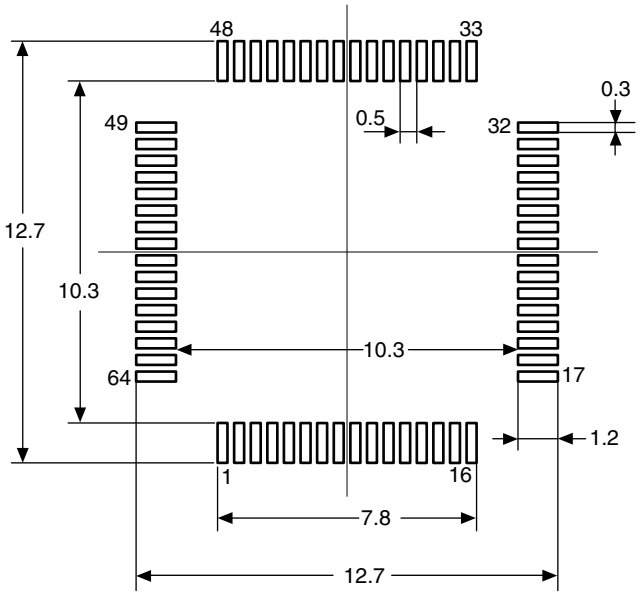

1. Dimensions are in millimeters.

LQFP64 device marking

The following figure gives an example of topside marking orientation versus pin 1 identifier location.

Other optional marking or inset/upset marks, which identify the parts throughout supply chain operations, are not indicated below.

Figure 39. LQFP64 10 x 10 mm, 64-pin low-profile quad flat package top view example

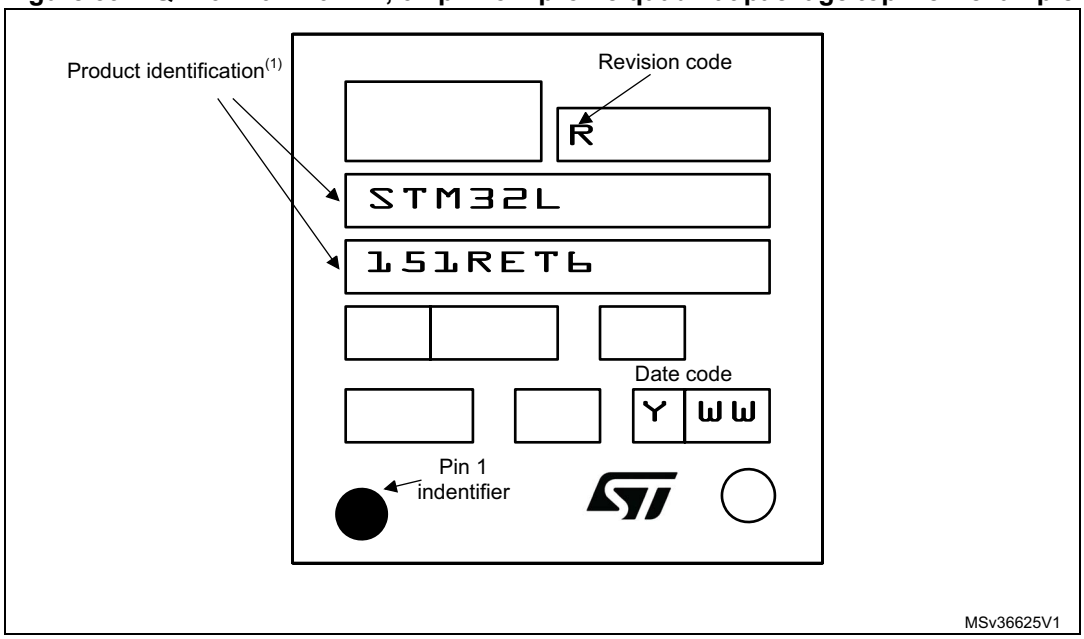

1. Parts marked as ES or E or accompanied by an engineering sample notification letter are not yet qualified and therefore not approved for use in production. ST is not responsible for any consequences resulting from such use. In no event will ST be liable for the customer using any of these engineering samples in production. ST's Quality department must be contacted prior to any decision to use these engineering samples to run a qualification activity.

7.4 UFBGA132, 7 x 7 mm, 132-ball ultra thin, fine-pitch ball grid array package information

Figure 40. UFBGA132, 7 x 7 mm, 132-ball ultra thin, fine-pitch ball grid array package outline

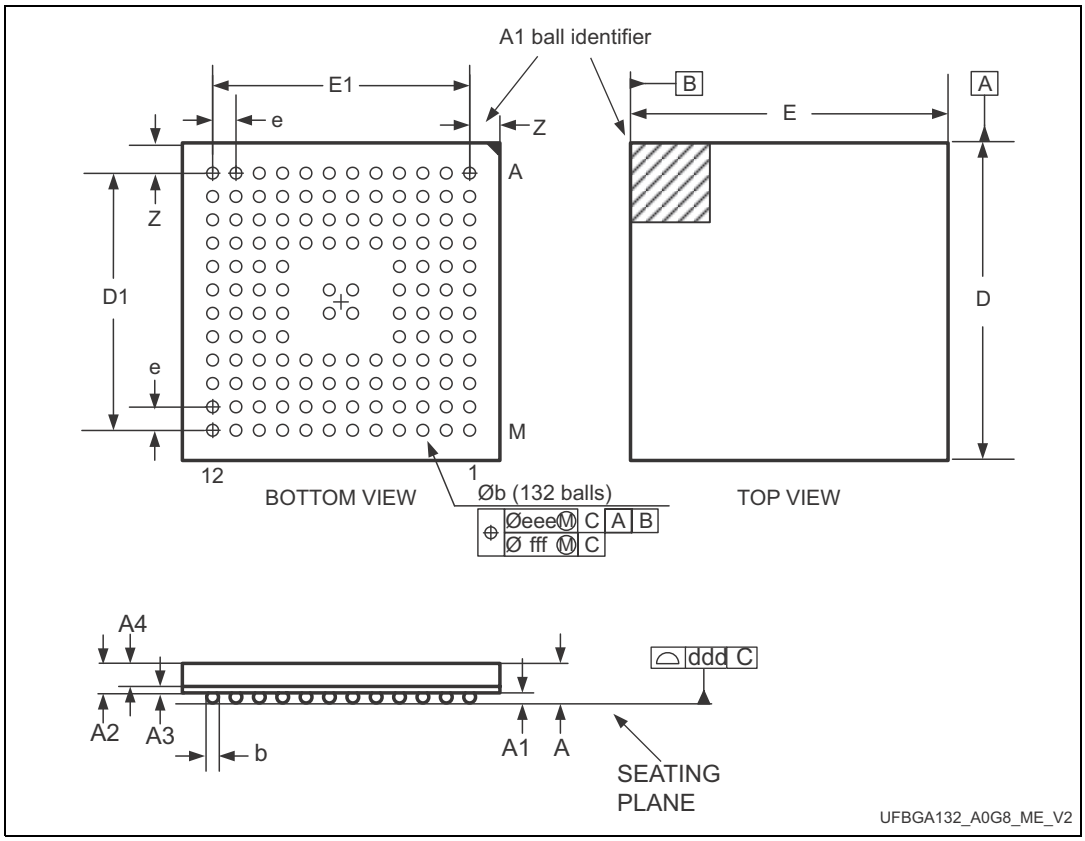

1. Drawing is not to scale.

Table 68. UFBGA132, 7 x 7 mm, 132-ball ultra thin, fine-pitch ball grid array package mechanical data

Symbol	millimeters			inches(1)		
	Min	Typ	Max	Min	Typ	Max
A	0.460	0.530	0.600	0.0181	0.0209	0.0236
A1	0.050	0.080	0.110	0.0020	0.0031	0.0043
A2	0.400	0.450	0.500	0.0157	0.0177	0.0197
A3	0.270	0.320	0.370	0.0106	0.0126	0.0146
b	0.170	0.280	0.330	0.0067	0.0110	0.0130
D	6.950	7.000	7.050	0.2736	0.2756	0.2776
E	6.950	7.000	7.050	0.2736	0.2756	0.2776
e	-	0.500	-	-	0.0197	-
F	0.700	0.750	0.800	0.0276	0.0295	0.0315

Table 68. UFBGA132, 7 x 7 mm, 132-ball ultra thin, fine-pitch ball grid array package mechanical data (continued)

Symbol	millimeters			inches[1]		
	Min	Typ	Max	Min	Typ	Max
ddd	-	-	0.080	-	-	0.0031
eee	-	-	0.150	-	-	0.0059
fff	-	-	0.050	-	-	0.0020

1. Values in inches are converted from mm and rounded to 4 decimal digits.

Figure 41. UFBGA132, 7 x 7 mm, 132-ball ultra thin, fine-pitch ball grid array package recommended footprint

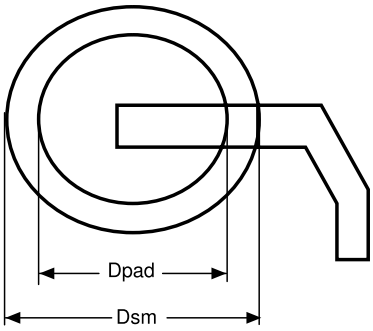

Pitch	0.5 mm
D pad	0.27 mm
Dsm	0.35 mm typ (depends on the soldermask registration tolerance)
Solder paste	0.27 mm aperture diameter

ai15495

UFBGA132 device marking

The following figure gives an example of topside marking orientation versus ball A1 identifier location.

Other optional marking or inset/upset marks, which identify the parts throughout supply chain operations, are not indicated below.

Figure 42. UFBGA132, 7 x 7 mm, 132-ball ultra thin, fine-pitch ball grid array package top view example

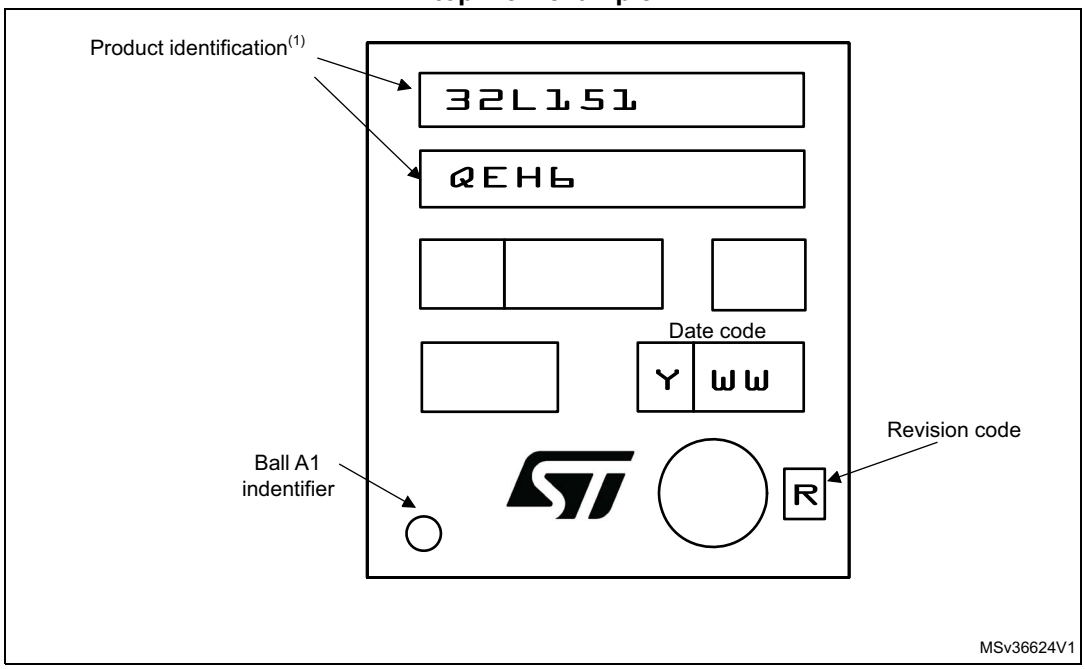

1. Parts marked as ES or E or accompanied by an engineering sample notification letter are not yet qualified and therefore not approved for use in production. ST is not responsible for any consequences resulting from such use. In no event will ST be liable for the customer using any of these engineering samples in production. ST's Quality department must be contacted prior to any decision to use these engineering samples to run a qualification activity.

7.5 WLCSP104, 0.4 mm pitch wafer level chip scale package information

Figure 43. WLCSP104, 0.4 mm pitch wafer level chip scale package outline

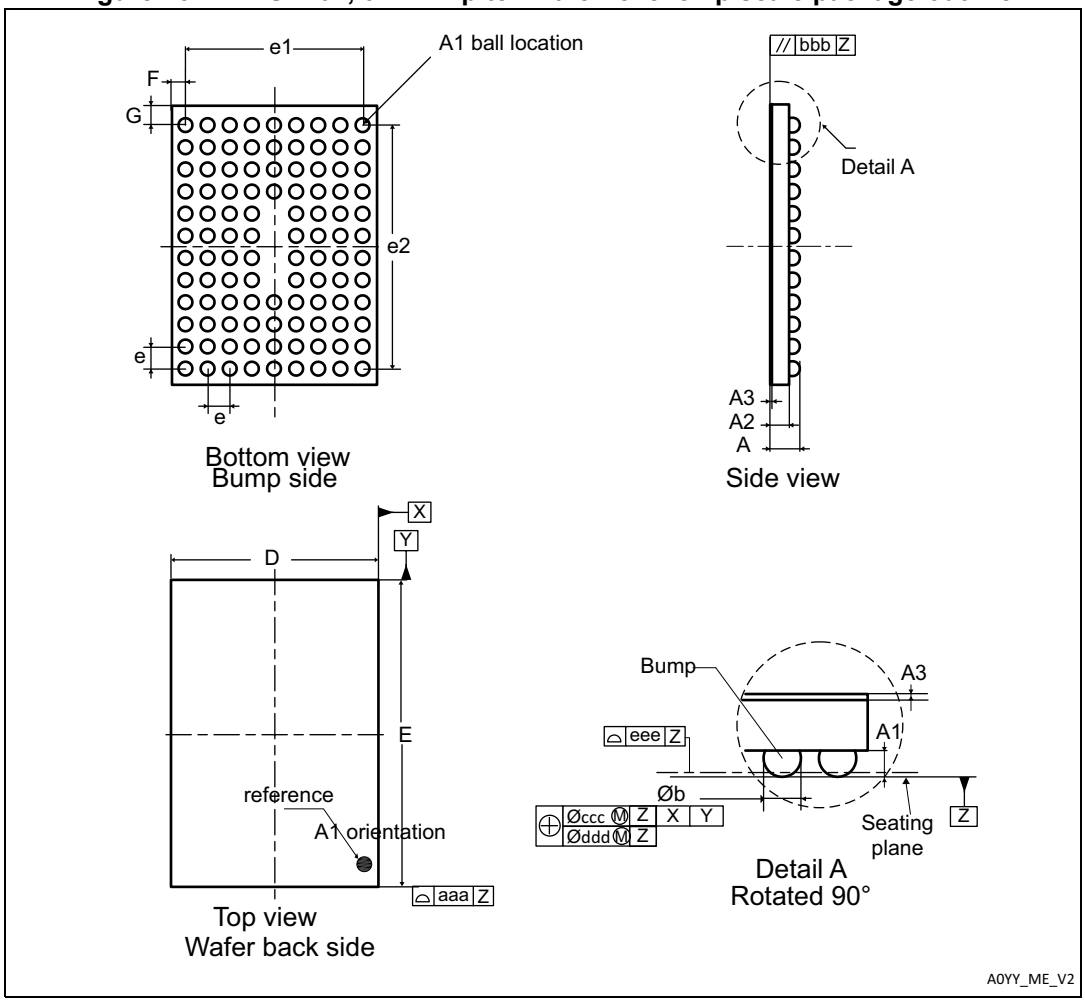

1. Drawing is not to scale.

Table 69. WLCSP104, 0.4 mm pitch wafer level chip scale package mechanical data

Symbol	millimeters			inches[1]		
	Min	Typ	Max	Min	Typ	Max
A	0.525	0.555	0.585	0.0207	0.0219	0.023
A1	-	0.175	-	-	0.0069	-
A2	-	0.38	-	-	0.015	-
A3[2]	-	0.025	-	-	0.001	-
ø b[3]	0.22	0.25	0.28	0.0087	0.0098	0.011
D	4.06	4.095	4.13	0.1598	0.1612	0.1626
E	5.059	5.094	5.129	0.1992	0.2006	0.2019
e	-	0.4	-	-	0.0157	-
e1	-	3.2	-	-	0.126	-
e2	-	4.4	-	-	0.1732	-
F	-	0.447	-	-	0.0176	-
G	-	0.347	-	-	0.0137	-
aaa	-	-	0.1	-	-	0.0039
bbb	-	-	0.1	-	-	0.0039
ccc	-	-	0.1	-	-	0.0039
ddd	-	-	0.05	-	-	0.002
eee	-	-	0.05	-	-	0.002

1. Values in inches are converted from mm and rounded to 4 decimal digits.
2. Back side coating.
3. Dimension is measured at the maximum bump diameter parallel to primary datum Z.

Figure 44. WLCSP104, 0.4 mm pitch wafer level chip scale package recommended footprint

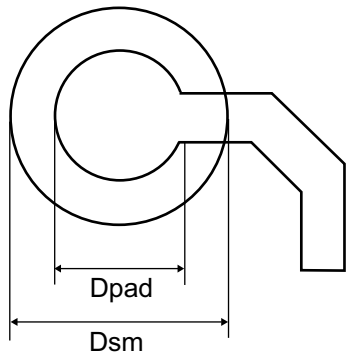

Table 70. WLCSP104, 0.4 mm pitch recommended PCB design rules

Dimension	Recommended values
Pitch	0.4
Dpad	260 µm max. (circular)
	220 µm recommended
Dsm	300 µm min. (for 260 µm diameter pad)
PCB pad design	Non-solder mask defined via underbump allowed.

WLCSP104 device marking

The following figure gives an example of topside marking orientation versus ball A1 identifier location.

Other optional marking or inset/upset marks, which identify the parts throughout supply chain operations, are not indicated below.

Figure 45. WLCSP104, 0.4 mm pitch wafer level chip scale package top view example

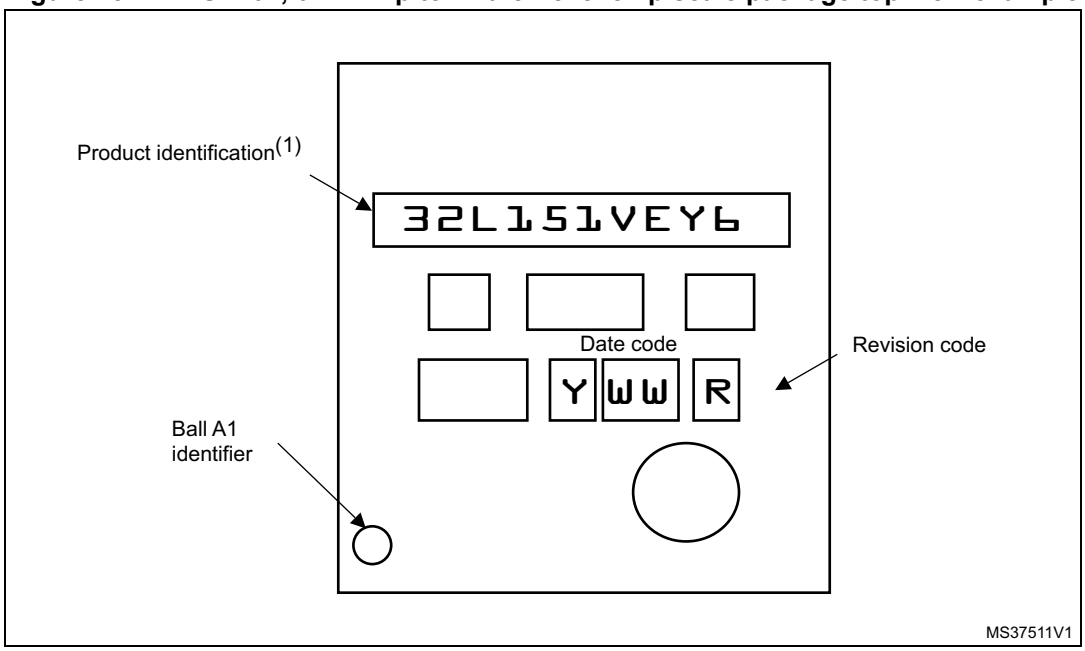

1. Parts marked as ES or E or accompanied by an engineering sample notification letter are not yet qualified and therefore not approved for use in production. ST is not responsible for any consequences resulting from such use. In no event will ST be liable for the customer using any of these engineering samples in production. ST's Quality department must be contacted prior to any decision to use these engineering samples to run a qualification activity.

7.6 Thermal characteristics

The maximum chip-junction temperature, T_J max, in degrees Celsius, may be calculated using the following equation:

T_J max = T_A max + (P_D max × Θ_{JA})

Where:

- T_A max is the maximum ambient temperature in °C,
- Θ_{JA} is the package junction-to-ambient thermal resistance, in °C/W,
- P_D max is the sum of P_{INT} max and $P_{I/O}$ max (P_D max = P_{INT} max + $P_{I/O}$max),
- P_{INT} max is the product of I_{DD} and V_{DD}, expressed in Watts. This is the maximum chip internal power.

$P_{I/O}$ max represents the maximum power dissipation on output pins where:

$P_{I/O}$ max = Σ (V_{OL} × I_{OL}) + Σ((V_{DD} – V_{OH}) × I_{OH}),

taking into account the actual V_{OL} / I_{OL} and V_{OH} / I_{OH} of the I/Os at low and high level in the application.

Table 71. Thermal characteristics

Symbol	Parameter	Value	Unit
Θ_{JA}	**Thermal resistance junction-ambient** LQFP144 - 20 x 20 mm / 0.5 mm pitch	40	°C/W
	Thermal resistance junction-ambient UFBGA132 - 7 x 7 mm	60	
	Thermal resistance junction-ambient LQFP100 - 14 x 14 mm / 0.5 mm pitch	43	
	Thermal resistance junction-ambient LQFP64 - 10 x 10 mm / 0.5 mm pitch	46	
	Thermal resistance junction-ambient WLCSP104 - 0.400 mm pitch	46	

Figure 46. Thermal resistance suffix 6

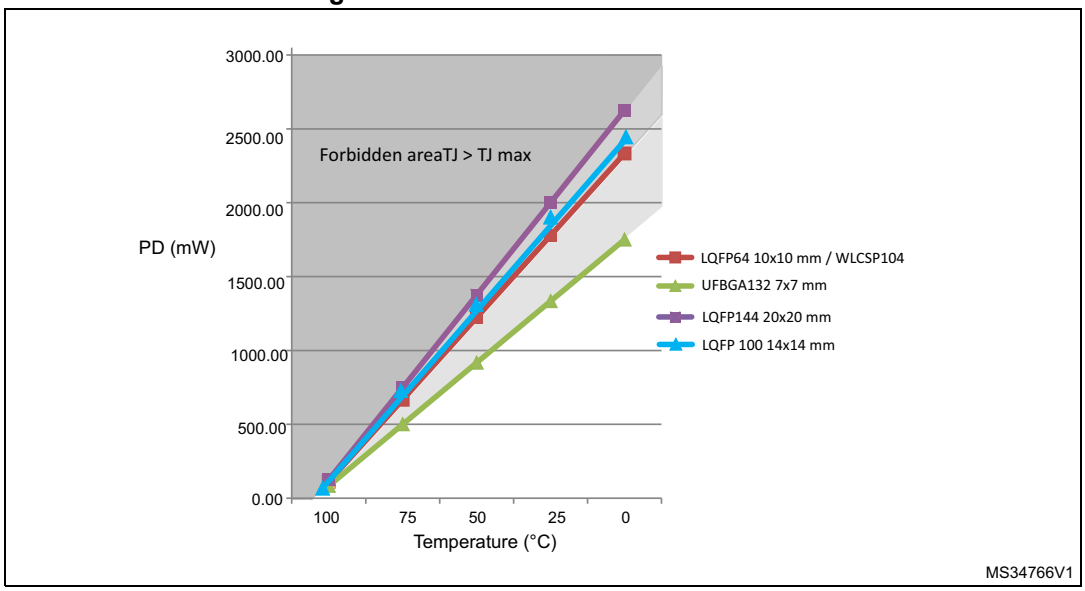

Figure 47. Thermal resistance suffix 7

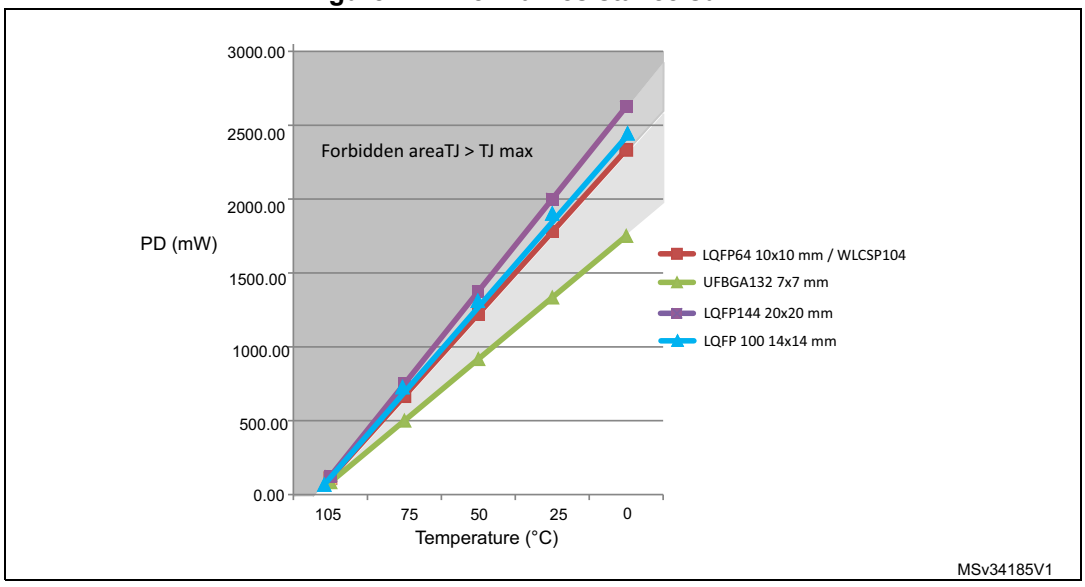

7.6.1 Reference document

JESD51-2 Integrated Circuits Thermal Test Method Environment Conditions - Natural Convection (Still Air). Available from www.jedec.org.

8 Part numbering

Table 72. STM32L151xE and STM32L152xE Ordering information scheme

Example: STM32 L 151 R E T 6 D TR

Device family

STM32 = ARM-based 32-bit microcontroller

Product type

L = Low-power

Device subfamily

151: Devices without LCD

152: Devices with LCD

Pin count

R = 64 pins

V = 100/104 pins

Z = 144 pins

Q = 132 pins

Flash memory size

E= 512 Kbytes of Flash memory

Package

H = BGA

T = LQFP

Y = WLCSP104

Temperature range

6 = Industrial temperature range, –40 to 85 °C

7 = Industrial temperature range, –40 to 105 °C

Options

No character = V_{DD} range: 1.8 to 3.6 V and BOR enabled

D = V_{DD} range: 1.65 to 3.6 V and BOR disabled

Packing

TR = tape and reel

No character = tray or tube

For a list of available options (speed, package, etc.) or for further information on any aspect of this device, please contact the nearest ST sales office.

9 Revision History

Table 73. Document revision history

Date	Revision	Changes
31-Oct-2013	1	Initial release.
19-Feb-2014	2	Added Input Voltage in *Table 13: General operating conditions*. Updated: *Section 2.2: Ultra-low-power device continuum*, *Table 21: Current consumption in Low-power sleep mode*, *Table 20: Current consumption in Low-power run mode*, *Table 36: Flash memory and data EEPROM endurance and retention*, Updated Ultra-Low-power Feature inside Cover Page Updated *Table 56: ADC accuracy*, *Table 37: EMS characteristics*, *Table 38: EMI characteristics*, *Table 39: ESD absolute maximum ratings*, *Table 42: I/O static characteristics*, *Table 45: NRST pin characteristics*. Added *WLCSP104, 0.4 mm pitch wafer level chip scale package recommended footprint* for package WLCSP104, removed figures “Power supply and reference decoupling (V_{REF+} not connected to V_{DDA}) and “Power supply and reference decoupling (V_{REF+} connected to V_{DDA}). Updated current consumption values.
21-Feb-2014	3	Ultra low power features modification inside Cover page. Updated *Table 5: Functionalities depending on the working mode (from Run/active down to standby)*, *Table 58: DAC characteristics*
16-May-2014	4	Updated I_{IO} in *Table 11: Current characteristics*. Removed note 4 in *Table 61: Temperature sensor characteristics*. Added *Table 41: UFBGA132, 7 x 7 mm, 132-ball ultra thin, fine-pitch ball grid array package recommended footprint*.. Modified pins F9 for WLCSP104 package inside *Table 8: STM32L151xE and STM32L152xE pin definitions*
13-Oct-2014	5	Updated *Section 3.17: Communication interfaces* putting I2S characteristics inside. Updated DMIPS features in cover page and *Section 2: Description*. Updated max temperature at 105°C instead of 85°C in the whole datasheet. Updated current consumption in *Table 19: Current consumption in Sleep mode*. Updated *Table 24: Peripheral current consumption* with new measured current values. Updated *Table 57: Maximum source impedance RAIN max* adding note 2.
10-Feb-2015	6	Updated *Section : In order to meet environmental requirements, ST offers these devices in different grades of ECOPACK® packages, depending on their level of environmental compliance. ECOPACK® specifications, grade definitions and product status are available at: www.st.com. ECOPACK® is an ST trademark.* with new package device marking. Updated *Figure 8: Memory map*.

Table 73. Document revision history (continued)

Date	Revision	Changes
27-Apr-2015	7	Updated *Section 7: Package information* structure: Paragraph titles and paragraph heading level. Updated *Section 7.1: LQFP144, 20 x 20 mm, 144-pin low-profile quad flat package information* removing gate mark in *Figure 33* and adding text for device orientation versus pin1 identifier. Updated *Section 7.2: LQFP100, 14 x 14 mm, 100-pin low-profile quad flat package information* removing gate mark in *Figure 36* and adding note for device orientation versus pin 1 identifier. Updated *Section 7: Package information* for all other package device marking adding text in for device orientation versus pin 1 or ball A1 identifier. Added *Figure 44: WLCSP104, 0.4 mm pitch wafer level chip scale package recommended footprint* and *Table 70: WLCSP104, 0.4 mm pitch recommended PCB design rules*. Updated *Table 8: STM32L151xE and STM32L152xE pin definitions* ADC inputs. Updated *Table 16: Embedded internal reference voltage* temperature coefficient at 100ppm/°C. and table footnote 3: “guaranteed by design” changed by “guaranteed by characterization results”. Updated *Table 63: Comparator 2 characteristics* new maximum threshold voltage temperature coefficient at 100ppm/°C.

Table 73. Document revision history (continued)

Date	Revision	Changes
09-Feb-2016	8	Updated cover page putting eight SPIs in the peripheral communication interface list. Updated *Table 2: Ultra-low-power STM32L151xE and STM32L152xE device features and peripheral counts* SPI and I2S lines. Updated *Table 39: ESD absolute maximum ratings* CDM class II by class C3 and C4 depending of the package. Updated all the notes, removing 'not tested in production'. Updated *Table 10: Voltage characteristics* adding note about V_{REF-} pin. Updated *Table 5: Functionalities depending on the working mode (from Run/active down to standby)* LSI and LSE functionalities putting "Y" in Standby mode.
25-Aug-2017	9	Updated *Table 42: I/O static characteristics* pull-up and pull-down values. Updated *Table 45: NRST pin characteristics* pull-up values. Updated *Section 7: Package information* adding information about other optional marking or inset/upset marks. Updated note 1 below all the package device marking figures. Updated *Section 7: Package information* replacing "Marking of engineering samples" by "device marking". Updated *Nested vectored interrupt controller (NVIC)* in *Section 3.2: ARM® Cortex®-M3 core with MPU* about process state automatically saved. Updated *Table 3: Functionalities depending on the operating power supply range* removing I/O operation column and adding note about GPIO speed. Updated *Table 41: I/O current injection susceptibility* note by 'injection is not possible'. Updated *Figure 19: Recommended NRST pin protection* note about the 0.1uF capacitor. Updated *Table 58: DAC characteristics* resistive load. Updated *Section 3.1: Low-power modes* Low-power run mode (MSI) RC oscillator clock. Updated *Table 5: Functionalities depending on the working mode (from Run/active down to standby)* disabling I2C functionality in Low-power Run and Low-power Sleep modes.

IMPORTANT NOTICE – PLEASE READ CAREFULLY

STMicroelectronics NV and its subsidiaries (“ST”) reserve the right to make changes, corrections, enhancements, modifications, and improvements to ST products and/or to this document at any time without notice. Purchasers should obtain the latest relevant information on ST products before placing orders. ST products are sold pursuant to ST’s terms and conditions of sale in place at the time of order acknowledgement.

Purchasers are solely responsible for the choice, selection, and use of ST products and ST assumes no liability for application assistance or the design of Purchasers’ products.

No license, express or implied, to any intellectual property right is granted by ST herein.

Resale of ST products with provisions different from the information set forth herein shall void any warranty granted by ST for such product.

ST and the ST logo are trademarks of ST. All other product or service names are the property of their respective owners.

Information in this document supersedes and replaces information previously supplied in any prior versions of this document.

© 2017 STMicroelectronics – All rights reserved