LCD TFT Module Specification

Riverdi
our pixels behave

RVT4.3B480272CFWN00

LCD TFT Datasheet

Rev.2.1.0

2017-11-21

ITEM	CONTENTS	UNIT
LCD Type	TFT/Transmissive/Normally white	/
Size	4.3	Inch
Viewing Direction	12:00 (without image inversion)	O' Clock
Gray Scale Inversion Direction	6:00	O' Clock
LCM (W × H × D)	106.30 × 68.00 × 7.00	mm^3
Active Area (W × H)	95.04 × 53.86	mm^2
Dot Pitch (W × H)	0.066 × 0.198	mm^2
Number of Dots	480 (RGB) × 272	/
Driver IC	FT800	/
Backlight Type	10 LEDs	/
Surface Luminance	550	cd/m^2
Interface Type	SPI/I2C	/
Color Depth	262k	/
Pixel Arrangement	RGB Vertical Stripe	/
Surface Treatment	Anti-glare	
Input Voltage	3.3	V
With/Without TSP	Without Touch Panel	/
Weight	76	g

Note 1: RoHS compliant

Note 2: LCM weight tolerance: ± 5%.

sales@prom-elec.com / ООО ПРОМЭЛЕКТРОНИКА

REVISION RECORD

REVNO.	REVDATE	CONTENTS	REMARKS
1.0	2014-05-16	Initial Release	
1.1	2014-11-12	Update mechanical drawing	
1.2	2015-01-19	Update LED lifetime	
1.3	2015-02-23	Update mode select information and thickness	
1.4	2015-05-27	Update Electrical Characteristics	
1.5	2016-08-08	Added Inspection Standards	
1.6	2016-08-23	Updated Mechanical Drawing	
2.0.0	2017-05-31	Glass change, new TFT open dimension, FFC shape, new IC controller and updated pinout	
2.1.0	2017-11-21	Update Electrical Characteristics	

CONTENTS

REVISION RECORD 2
CONTENTS 3
1 MODULE CLASSIFICATION INFORMATION 4
2 MODULE DRAWING 4
3 ABSOLUTE MAXIMUM RATINGS ..... **Error! Bookmark not defined.**
4 ELECTRICAL CHARACTERISTICS 5
5 ELECTRO-OPTICAL CHARACTERISTICS 5
6 INTERFACE DESCRIPTION 7
7 FT800 CONTROLLER SPECIFICATIONS 8
7.1 Serial host interface 8
7.2 Block Diagram 9
7.3 Host interface SPI mode 0 9
7.4 Backlight driver block diagram 10
8 LCD TIMING CHARACTERISTICS 10
8.1 Clock and data input time diagram 10
8.2 Parallel RGB input timing table 11
9 INSPECTION 12
9.1 Inspection condition 12
Ambient conditions: 12
Viewing Angle: 12
9.2 Inspection standard 13
10 RELIABILITY TEST 16
11 LEGAL INFORMATION 17

1 MODULE CLASSIFICATION INFORMATION

RV	T	4.3	B	480272	C	F	W	N	00
1.	2.	3.	4.	5.	6.	7.	8.	9.	10.

1.	**BRAND**	**RV** – Riverdi
2.	**PRODUCT TYPE**	**T – TFT Standard** **F** – TFT Custom
3.	**DISPLAY SIZE**	**3.5** – 3.5” **4.3 – 4.3”** **5.7** – 5.7” **7.0** – 7.0”
4.	**MODEL SERIAL NO.**	**B (A-Z)**
5.	**RESOLUTION**	**320240** – 320x240 px **480272 – 480x272 px** **800480** – 800x480 px
6.	**INTERFACE**	**T** – TFT LCD, RGB **L** – TFT LCD, LVDS **C – TFT + Controller**
7.	**FRAME**	**N** – No Frame **F – Mounting Frame**
8.	**BACKLIGHT TYPE**	**W – LED White**
9.	**TOUCH PANEL**	**N – No Touch Panel** **R** – Resistive Touch Panel **C** – Capacitive Touch Panel
10.	**VERSION**	**00** (00-99)

PIN	DESC
1	VDD
2	GND
3	SPI_SCLK / I2C_SCL
4	MISO / I2C_SDA
5	MOSI / I2C_SA0
6	CS / I2C_SA1
7	INT
8	PD
9	MODE
10	AUDIO_OUT
11	NC
12	NC
13	NC
14	NC
15	NC
16	NC
17	BLVDD
18	BLVDD
19	BLGND
20	BLGND

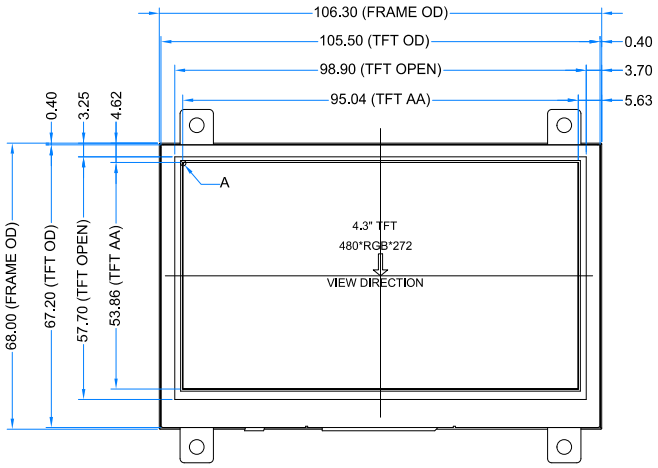

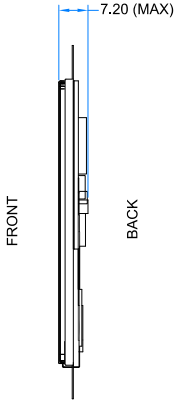

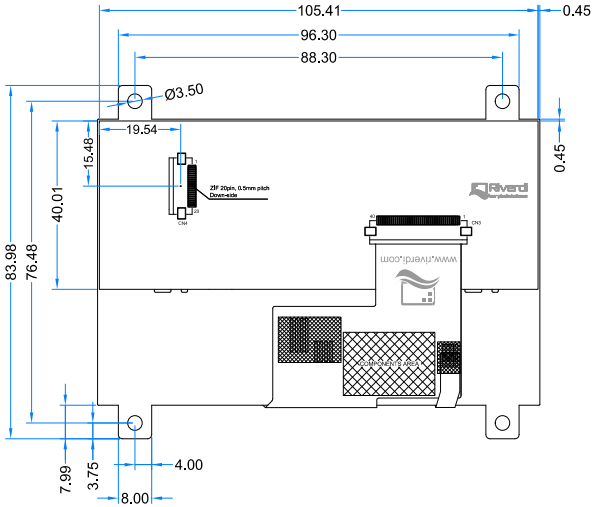

DETAIL A 60:1

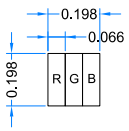

INTERNAL BACKLIGHT
CIRCUIT DIAGRAM

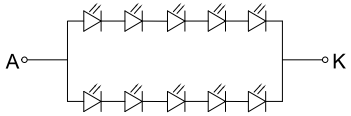

NOTES:
1. DISPLAY TYPE: TFT, TRANSMISSIVE, NORMALLY WHITE
2. OPERATION VOLTAGE: VDD=3.3V
3. VIEWING DIRECTION: 12 O'CLOCK
4. IC CONTROLLER: FT800
5. OPERATING TEMP.: -20°C ~ 70°C
6. STORAGE TEMP.: -30°C ~ 80°C
7. LED BACKLIGHT: 10-LED WHITE
8. SURFACE LUMINANCE: 550 cd/m^2
9. GENERAL TOLERANCE: ±0.2
10. RoHS COMPLIANT

Ver.	DESCRIPTION	DATE
2.0.0	Glass change, new TFT open dimension, FFC shape. New IC controller and updated pinout.	2017.05.25

CUSTOMER		DATE	2017/05/25
DRAWN	SCALE	TITLE	RVT4.3B480272CFWN00
DFTG CHK	UNIT mm		
ENGR CHK		MODEL	
APPROVAL			
RIVERDI SP. Z O.O.		DWG NO Rev. 2.0.0	PAGE 1/1

3 ABSOLUTE MAXIMUM RATINGS

PARAMETER	SYMBOL	MIN	MAX	UNIT
Supply Voltage for Logic	VDD	-0.3	3.6	V
Input Voltage for Logic	VIN	-0.3	VDD	V
Input Voltage for LED Inverter	BLVDD	-0.3	7.0	V
Operating Temperature	T_{OP}	-20	70	°C
Storage Temperature	T_{ST}	-30	80	°C
Humidity	RH	-	90% (Max 60°C)	RH

4 ELECTRICAL CHARACTERISTICS

PARAMETER	SYMBOL	MIN	TYP	MAX	UNIT	NOTES
Supply Voltage for Module	VDD	3.0	3.3	3.6	V	
Input Voltage for LED Inverter	BLVDD	2.8	3.3	5.5	V	
Input Current (Exclude LED Backlight)	IDD	-	70	87	mA	VDD = 3.3V
LED Backlight Current	$IDD_{backlight}$		260	325	mA	BLVDD=3.3V
LED Backlight Current	$IDD_{backlight}$		150	187	mA	BLVDD=5V
Total Input Current (Include LED Backlight 100%)	IDD_{total}	-	330	412	mA	BLVDD=3.3V
Input Voltage ' H ' level	V_{IH}	0.7VDD	-	VDD	V	
Input Voltage ' L ' level	V_{IL}	0	-	0.2VDD	V	
LED Life Time	-	30000	50000	-	Hrs	Note 1

Note 1: The LED life time is defined as the module brightness decrease to 50% original brightness at Ta=25°C.

5 ELECTRO-OPTICAL CHARACTERISTICS

ITEM		SYMBOL	CONDITION	MIN	TYP	MAX	UNIT	REMARK	NOTE
Response Time		Tr+Tf	θ=0° Ø=0° Ta=25	-	20	30	ms	Figure 1	4
Contrast Ratio		Cr		320	400	-	---	Figure 2	1
Luminance Uniformity		δ WHITE		80	-	-	%	Figure 2	3
Surface Luminance		Lv		440	550	-	cd/m^2	Figure 2	2
Viewing Angle Range		θ	Ø = 90°	35	50	-	deg	Figure 3	6
			Ø = 270°	55	70	-	deg	Figure 3	
			Ø = 0°	55	70	-	Deg	Figure 3	
			Ø = 180°	55	70	-	Deg	Figure 3	
CIE (x, y) Chromaticity	Red	x	θ=0° Ø=0° Ta=25	0.570	0.620	0.670		Figure 2	5
		y		0.294	0.344	0.394			
	Green	x		0.256	0.306	0.356			
		y		0.513	0.563	0.613			
	Blue	x		0.083	0.133	0.183			
		y		0.099	0.149	0.199			
	White	x		0.250	0.300	0.350			
		y		0.280	0.330	0.380			

Note 1. Contrast Ratio(CR) is defined mathematically as below, for more information see Figure 1.

$$\text{Contrast Ratio} = \frac{\text{Average Surface Luminance with all white pixels (P1, P2, P3, P4, P5)}}{\text{Average Surface Luminance with all black pixels (P1, P2, P3, P4, P5)}}$$

Note 2. Surface luminance is the LCD surface from the surface with all pixels displaying white. For more information see Figure 2.

Lv = Average Surface Luminance with all white pixels (P1, P2, P3, P4, P5)

Note 3. The uniformity in surface luminance δ WHITE is determined by measuring luminance at each test position 1 through 5, and then dividing the maximum luminance of 5 points luminance by minimum luminance of 5 points luminance. For more information see Figure 2.

$$\delta\,\text{WHITE} = \frac{\text{Minimum Surface Luminance with all white pixels (P1, P2, P3, P4, P5)}}{\text{Maximum Surface Luminance with all white pixels (P1, P2, P3, P4, P5)}}$$

Note 4. Response time is the time required for the display to transition from white to black (Rise Time, Tr) and from black to white (Decay Time, Tf). For additional information see FIG 1. The test equipment is Autronic-Melchers's ConoScope series.

Note 5. CIE (x, y) chromaticity, the x, y value is determined by measuring luminance at each test position 1 through 5, and then make average value.

Note 6. Viewing angle is the angle at which the contrast ratio is greater than 2. For TFT module the contrast ratio is greater than 10. The angles are determined for the horizontal or x axis and the vertical or y axis with respect to the z axis which is normal to the LCD surface. For more information see Figure 3.

Note 7. For viewing angle and response time testing, the testing data is based on Autronic-Melchers's ConoScope series. Instruments for Contrast Ratio, Surface Luminance, Luminance Uniformity, CIE the test data is based on TOPCON's BM-5 photo detector.

Figure 1. The definition of response time

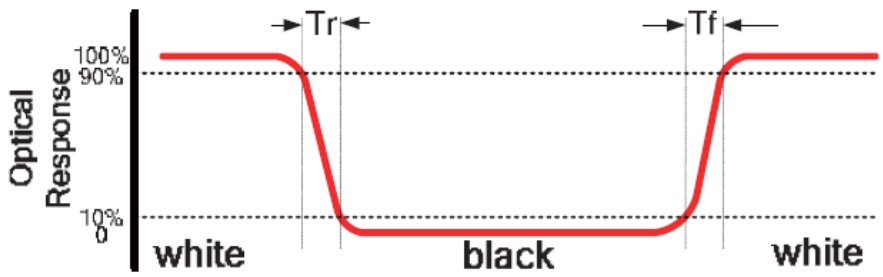

Figure 2. Measuring method for Contrast ratio, surface luminance, Luminance uniformity, CIE (x, y) chromaticity

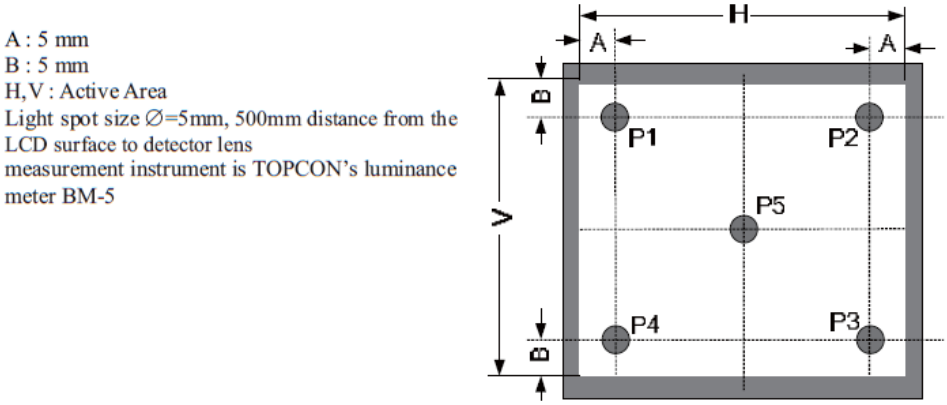

Figure 3.The definition of viewing angle

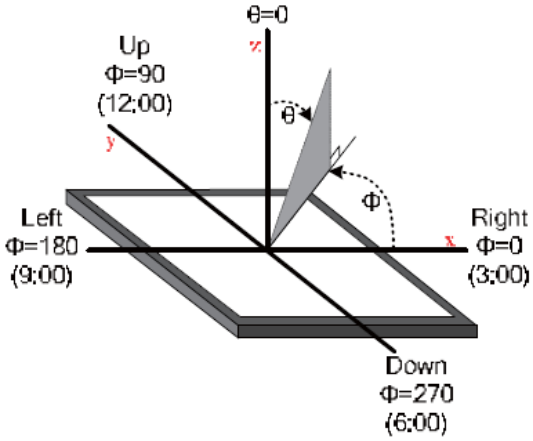

6 INTERFACE DESCRIPTION

PIN NO.	SYMBOL	DESCRIPTION
1	VDD	Power Supply
2	GND	Ground
3	SPI_SCLK/ I2C_SCL	SPI SCK Signal / I2C SCL Signal, Internally 47k Pull UP
4	MISO/ I2C_SDA	SPI MISO Signal / I2C SDA Signal, Internally 47k Pull UP
5	MOSI/ I2C_SA0	SPI MOSI Signal / I2C Slave Address Bit 0, Internally 47k Pull UP
6	CS/I2C_SA1	SPI Chip Select Signal / I2C Slave Address Bit 1, Internally 47k Pull UP
7	INT	Interrupt Signal, Active Low, Internally 47k Pull UP
8	PD	Power Down Signal, Active Low, Internally 47k Pull UP
9	MODE	Host Interface SPI(Pull Low) or I2C(Pull Up) Mode Select Input, Internally 10k Pull DOWN
10	AUDIO_OUT	Audio Out Signal
11	NC	Not Connected
12	NC	Not Connected
13	NC	Not Connected
14	NC	Not Connected
15	NC	Not Connected
16	NC	Not Connected
17	BLVDD	Backlight Power Supply, Can Be Connected to VDD
18	BLVDD	Backlight Power Supply, Can Be Connected to VDD
19	BLGND	Backlight Ground, Internally connected to GND
20	BLGND	Backlight Ground, Internally connected to GND

7 FT800 CONTROLLER SPECIFICATIONS

FT800 or EVE (Embedded Video Engine) simplifies the system architecture for advanced human machine interfaces (HMIs) by providing functionality for display, audio, and touch as well as an object oriented architecture approach that extends from display creation to the rendering of the graphics.

7.1 Serial host interface

Figure 4.SPI interface connection

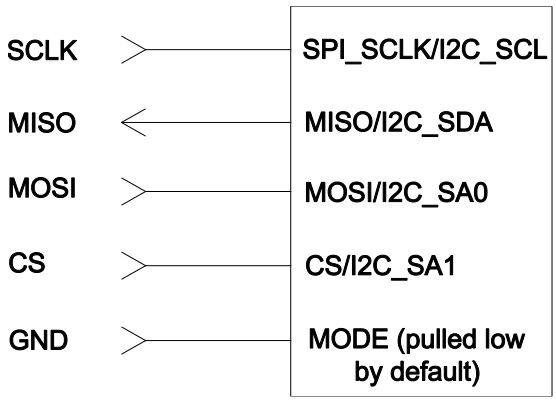

Figure 5.I2C interface connection

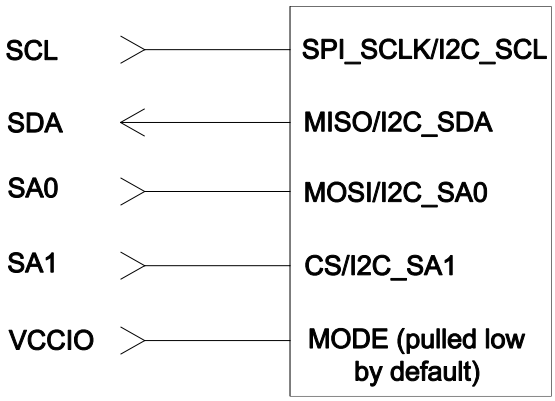

SPI Interface – the SPI slave interface operates up to 30MHz.

Only SPI mode 0 is supported. The SPI interface is selected by default (MODE pin is internally pulled low by 47k resistor).

I²C Interface – the I²C slave interface operates up to 3.4MHz, supporting standard-mode, fast-mode, fast-mode plus and high-speed mode.

The I²C device address is configurable between 20h to 23h depending on the I²C_SA[1:0] pin setting, i.e. the 7-bit I²C slave address is 0b'01000A1A0.

The I²C interface is selected when the MODE pin is tied to VDDIO.

7.2 Block Diagram

Figure 6. FT800 Block diagram

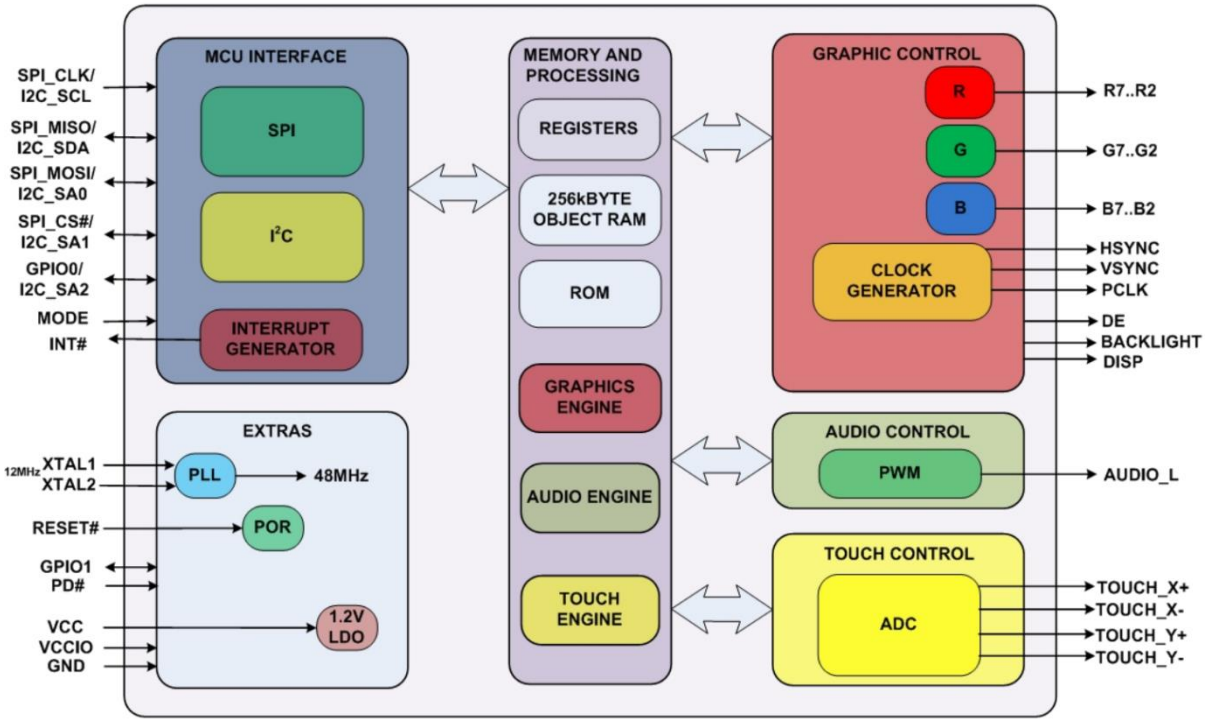

7.3 Host interface SPI mode 0

Figure 7. SPI timing diagram

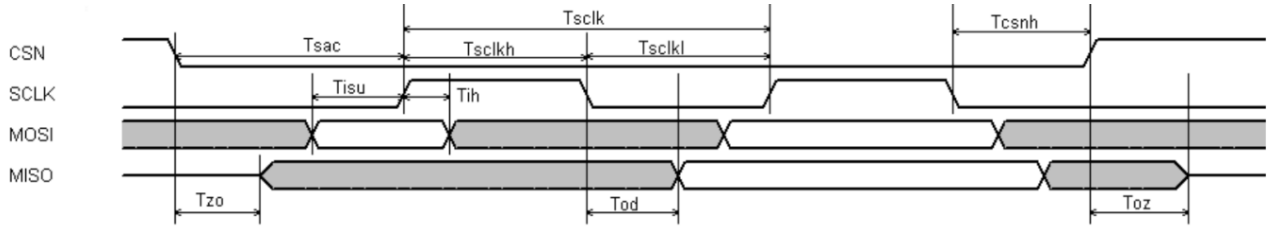

For more information about FT801 controller please go to official FT800 Datasheet.

http://www.ftdichip.com/Support/Documents/DataSheets/ICs/DS_FT800.pdf

7.4 Backlight driver block diagram

Backlight enable signal is internally connected to FT800 Backlight control pin. This pin is controlled by two FT800's registers. One of them specifies the PWM output frequency, second one specifies the duty cycle. Refer to FT800 datasheet for more information.

Figure 8. Backlight driver block diagram

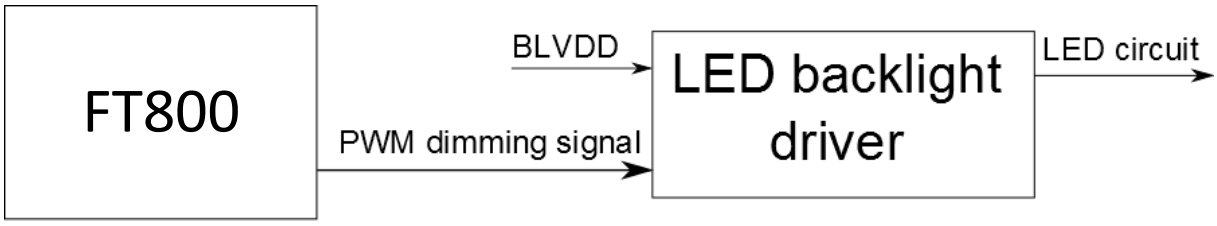

8 LCD TIMING CHARACTERISTICS

8.1 Clock and data input time diagram

Figure 9. Clock and data input time diagram

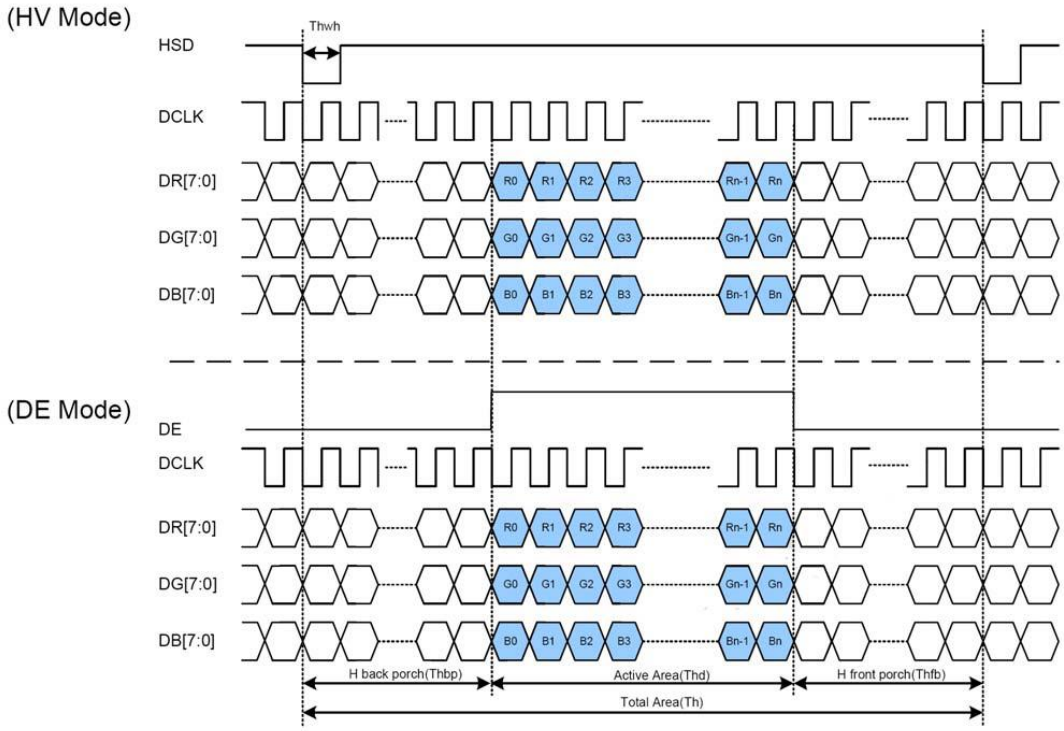

8.2 Parallel RGB input timing table

PARAMETER	SYMBOL	MIN	TYP	MAX	UNIT
DCLK Frequency	Fclk	5	9	12	MHz
VSD Period Time	Tv	277	288	400	H
VSD Display Area	Tvd		272		H
VSD Back Porch	Tvb	3	8	31	H
VSD Front Porch	Tvfp	2	8	97	H
HSD Period Time	Th	520	525	800	DCLK
HSD Display Area	Thd		480		DCLK
HSD Back Porch	Thbp	36	40	255	DCLK
HSD Front Porch	Thfp	4	5	65	DCLK

9 INSPECTION

Standard acceptance/rejection criteria for TFT module.

9.1 Inspection condition

Ambient conditions:

- Temperature: 25±°C
- Humidity: (60±10)%RH
- Illumination: Single fluorescent lamp non-directive (300 to 700 lux)

Viewing distance:

35±5cm between inspector bare eye and LCD.

Viewing Angle:

U/D: 45°/45°, L/R 45°/45°

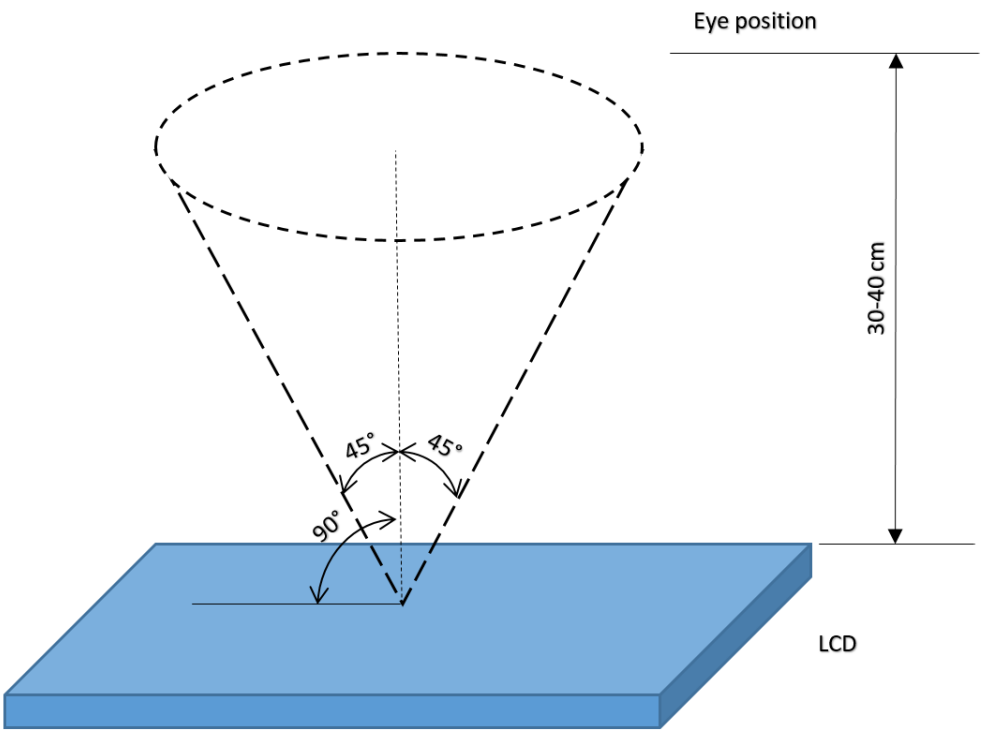

9.2 Inspection standard

<table>
<tr><th>Item</th><th>Criterion</th></tr>
<tr><td>Black spots, white spots, light leakage, Foreign Particle (round Type)</td><td>
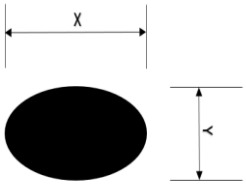

$$D = \frac{(x+y)}{2}$$

*Spots density: 10 mm²

<table>
<tr><th colspan="2">Size < 5”</th></tr>
<tr><td>Average Diameter</td><td>Qualified Qty</td></tr>
<tr><td>D < 0.2 mm</td><td>Ignored</td></tr>
<tr><td>0.2 mm < D < 0.3 mm</td><td>3</td></tr>
<tr><td>0.3 mm < D < 0.5 mm</td><td>2</td></tr>
<tr><td>0.5 mm < D</td><td>0</td></tr>
</table>

<table>
<tr><th colspan="2">Size >= 5”</th></tr>
<tr><td>Average Diameter</td><td>Qualified Qty</td></tr>
<tr><td>D<0.2 mm</td><td>Ignored</td></tr>
<tr><td>0.2 mm < D < 0.3 mm</td><td>4</td></tr>
<tr><td>0.3 mm < D < 0.5 mm</td><td>2</td></tr>
<tr><td>0.5 mm < D</td><td>0</td></tr>
</table>
</td></tr>
<tr><td>LCD black spots, white spots, light leakage (line Type)</td><td>
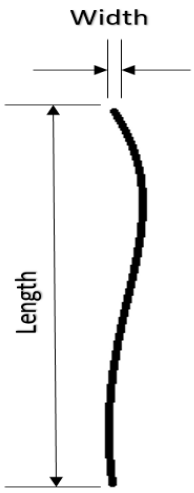

*Spots density: 10 mm²

<table>
<tr><th colspan="3">Size < 5”</th></tr>
<tr><td>Length</td><td>Width</td><td>Qualified Qty</td></tr>
<tr><td>-</td><td>W< 0.02</td><td>Ignored</td></tr>
<tr><td>L < 3.0</td><td>0.02 < W <0.05</td><td rowspan="2">2</td></tr>
<tr><td>L < 2.5</td><td>0.05 < W <0.08</td></tr>
<tr><td>-</td><td>0.08 < W</td><td>0</td></tr>
</table>

<table>
<tr><th colspan="3">Size >= 5”</th></tr>
<tr><td>Length</td><td>Width</td><td>Qualified Qty</td></tr>
<tr><td>-</td><td>W< 0.02</td><td>Ignored</td></tr>
<tr><td>L < 3.0</td><td>0.02 < W <0.05</td><td rowspan="2">4</td></tr>
<tr><td>L < 2.5</td><td>0.05 < W <0.08</td></tr>
<tr><td>-</td><td>0.08 < W</td><td>0</td></tr>
</table>
</td></tr>
</table>

<table>
<tr><th>Item</th><th>Criterion</th></tr>
<tr><td>Clear spots</td><td>
<table>
<tr><th colspan="2">Size < 5”</th></tr>
<tr><td>Average Diameter</td><td>Qualified Qty</td></tr>
<tr><td>D < 0.2 mm</td><td>Ignored</td></tr>
<tr><td>0.2 mm < D < 0.3 mm</td><td>3</td></tr>
<tr><td>0.3 mm < D < 0.5 mm</td><td>2</td></tr>
<tr><td>0.5 mm < D</td><td>0</td></tr>
</table>
<table>
<tr><th colspan="2">Size >= 5”</th></tr>
<tr><td>Average Diameter</td><td>Qualified Qty</td></tr>
<tr><td>D<0.2 mm</td><td>Ignored</td></tr>
<tr><td>0.2 mm < D < 0.3 mm</td><td>4</td></tr>
<tr><td>0.3 mm < D < 0.5 mm</td><td>2</td></tr>
<tr><td>0.5 mm < D</td><td>0</td></tr>
</table>
*Spots density: 10 mm
</td></tr>
<tr><td>Polarizer bubbles</td><td>
<table>
<tr><th colspan="2">Size < 5”</th></tr>
<tr><td>Average Diameter</td><td>Qualified Qty</td></tr>
<tr><td>D < 0.2 mm</td><td>Ignored</td></tr>
<tr><td>0.2 mm < D < 0.5 mm</td><td>3</td></tr>
<tr><td>0.5 mm < D < 1 mm</td><td>2</td></tr>
<tr><td>1 mm < D</td><td>0</td></tr>
<tr><td>Total Q’ty</td><td>3</td></tr>
</table>
<table>
<tr><th colspan="2">Size >= 5”</th></tr>
<tr><td>Average Diameter</td><td>Qualified Qty</td></tr>
<tr><td>D<0.25 mm</td><td>Ignored</td></tr>
<tr><td>0.25 mm < D < 0.5 mm</td><td>3</td></tr>
<tr><td>0.5 mm < D</td><td>0</td></tr>
</table>
</td></tr>
<tr><td>Electrical Dot Defect</td><td>
<table>
<tr><th colspan="2">Size < 5”</th></tr>
<tr><td>item</td><td>Qualified Qty</td></tr>
<tr><td>Black do defect</td><td>4</td></tr>
<tr><td>Bright dot defect</td><td>2</td></tr>
<tr><td>Total Dot</td><td>5</td></tr>
</table>
<table>
<tr><th colspan="2">Size >= 5”</th></tr>
<tr><td>item</td><td>Qualified Qty</td></tr>
<tr><td>Black do defect</td><td>5</td></tr>
<tr><td>Bright dot defect</td><td>2</td></tr>
<tr><td>Total Dot</td><td>5</td></tr>
</table>
</td></tr>
</table>

<table>
<tr><th>Item</th><th>Criterion</th></tr>
<tr><td>Touch panel spot</td><td>
<table>
<tr><th colspan="2">Size < 5”</th></tr>
<tr><td>Average Diameter</td><td>Qualified Qty</td></tr>
<tr><td>D < 0.2 mm</td><td>Ignored</td></tr>
<tr><td>0.2 mm < D < 0.4 mm</td><td>5</td></tr>
<tr><td>0.4 mm < D < 0.5 mm</td><td>2</td></tr>
<tr><td>0.5 mm < D</td><td>0</td></tr>
</table>
<table>
<tr><th colspan="2">Size >= 5”</th></tr>
<tr><td>Average Diameter</td><td>Qualified Qty</td></tr>
<tr><td>D<0.25 mm</td><td>Ignored</td></tr>
<tr><td>0.25 mm < D < 0.5 mm</td><td>4</td></tr>
<tr><td>0.5 mm < D</td><td>0</td></tr>
</table>
</td></tr>
<tr><td>Touch panel White line Scratch</td><td>
<table>
<tr><th colspan="3">Size < 5”</th></tr>
<tr><td>Length</td><td>Width</td><td>Qualified Qty</td></tr>
<tr><td>-</td><td>W< 0.02</td><td>Ignored</td></tr>
<tr><td>L < 3.0</td><td>0.02 < W <0.05</td><td rowspan="2">2</td></tr>
<tr><td>L < 2.5</td><td>0.05 < W <0.08</td></tr>
<tr><td>-</td><td>0.08 < W</td><td>0</td></tr>
</table>
<table>
<tr><th colspan="3">Size >= 5”</th></tr>
<tr><td>Length</td><td>Width</td><td>Qualified Qty</td></tr>
<tr><td>-</td><td>W< 0.03</td><td>Ignored</td></tr>
<tr><td>L < 5.0</td><td>0.03 < W <0.05</td><td>2</td></tr>
<tr><td>-</td><td>0.05 < W</td><td>0</td></tr>
</table>
</td></tr>
</table>

10 RELIABILITY TEST

NO.	TEST ITEM	TEST CONDITION
1	High Temperature Storage	80±2°C/240hours
2	Low Temperature Storage	-30±2°C/240hours
3	High Temperature Operating	70±2°C/240hours
4	Low Temperature Operating	-20±2°C/240hours
5	Temperature Cycle	-30±2°C~25~80±2°C × 20 cycles (30min.) (5min.) (30min.)
6	Damp Proof Test	60°C ±5°C × 90%RH/240hours
7	Vibration Test	Frequency 10Hz~55Hz Amplitude of vibration : 1.5mm Sweep: 10Hz~55Hz~10Hz X, Y, Z 2 hours for each direction.
8	Package Drop Test	Height:60 cm 1 corner,3 edges,6 surfaces
9	ESD Test	Air: ±4KV 150pF/330Ω 5 times Contact: ±2KV 150pF/330Ω 5 time

11 LEGAL INFORMATION

Riverdi makes no warranty, either expressed or implied with respect to any product, and specifically disclaims all other warranties, including, without limitation, warranties for merchantability, non-infringement and fitness for any particular purpose. Information about device are the property of Riverdi and may be the subject of patents pending or granted. It is not allowed to copy or disclosed this document without prior written permission.

Riverdi endeavors to ensure that the all contained information in this document are correct but does not accept liability for any error or omission. Riverdi products are in developing process and published information may be not up to date. Riverdi reserves the right to update and makes changes to Specifications or written material without prior notice at any time. It is important to check the current position with Riverdi.

Images and graphics used in this document are only for illustrative the purpose. All images and graphics are possible to be displayed on the range products of Riverdi, however the quality may vary. Riverdi is no liable to the buyer or to any third part for any indirect, incidental, special, consequential, punitive or exemplary damages (including without limitation lost profits, lost savings, or loss of business opportunity) relating to any product, service provided or to be provided by Riverdi, or the use or inability to use the same, even if Riverdi has been advised of the possibility of such damages.

Riverdi products are not fault tolerant nor designed, manufactured or intended for use or resale as on line control equipment in hazardous environments requiring fail – safe performance, such as in the operation of nuclear facilities, aircraft navigation or communication systems, air traffic control, direct life support machines or weapons systems in which the failure of the product could lead directly to death, personal injury or severe physical or environmental damage (‘High Risk Activities’). Riverdi and its suppliers specifically disclaim any expressed or implied warranty of fitness for High Risk Activities. Using Riverdi products and devices in 'High Risk Activities' and in any other application is entirely at the buyer’s risk, and the buyer agrees to defend, indemnify and hold harmless Riverdi from any and all damages, claims or expenses resulting from such use. No licenses are conveyed, implicitly or otherwise, under any Riverdi intellectual property rights.

Riverdi
our pixels behave