Important notice

Dear Customer,

On 7 February 2017 the former NXP Standard Product business became a new company with the tradename **Nexperia**. Nexperia is an industry leading supplier of Discrete, Logic and PowerMOS semiconductors with its focus on the automotive, industrial, computing, consumer and wearable application markets

In data sheets and application notes which still contain NXP or Philips Semiconductors references, use the references to Nexperia, as shown below.

Instead of http://www.nxp.com, http://www.philips.com/ or http://www.semiconductors.philips.com/, use **http://www.nexperia.com**

Instead of sales.addresses@www.nxp.com or sales.addresses@www.semiconductors.philips.com, use **salesaddresses@nexperia.com** (email)

Replace the copyright notice at the bottom of each page or elsewhere in the document, depending on the version, as shown below:
- © NXP N.V. (year). All rights reserved or © Koninklijke Philips Electronics N.V. (year). All rights reserved
Should be replaced with:
- **© Nexperia B.V. (year). All rights reserved**.

If you have any questions related to the data sheet, please contact our nearest sales office via e-mail or telephone (details via **salesaddresses@nexperia.com**). Thank you for your cooperation and understanding,

Kind regards,

Team Nexperia

sales@prom-elec.com / ООО ПРОМЭЛЕКТРОНИКА

74LVC2GU04

Dual unbuffered inverter

Rev. 10 — 10 February 2017 Product data sheet

1. General description

The 74LVC2GU04 provides two unbuffered inverters. Each inverter is a single stage with unbuffered output.

The inputs can be driven from either 3.3 V or 5 V devices. This feature allows the use of this device in a mixed 3.3 V and 5 V environment.

2. Features and benefits

- Wide supply voltage range from 1.65 V to 5.5 V
- 5 V tolerant input/output for interfacing with 5 V logic
- High noise immunity
- ESD protection:
  - HBM JESD22-A114F exceeds 2000 V
  - MM JESD22-A115-A exceeds 200 V
- ±24 mA output drive (V_{CC} = 3.0 V)
- CMOS low power consumption
- Latch-up performance exceeds 250 mA
- Input accepts voltages up to 5 V
- Multiple package options
- Specified from –40 °C to +85 °C and –40 °C to +125 °C

3. Ordering information

Table 1. Ordering information

Type number	Package			
	Temperature range	Name	Description	Version
74LVC2GU04GW	–40 °C to +125 °C	SC-88	plastic surface-mounted package; 6 leads	SOT363
74LVC2GU04GV	–40 °C to +125 °C	TSOP6	plastic surface-mounted package (TSOP6); 6 leads	SOT457
74LVC2GU04GM	–40 °C to +125 °C	XSON6	plastic extremely thin small outline package; no leads; 6 terminals; body 1 × 1.45 × 0.5 mm	SOT886
74LVC2GU04GF	–40 °C to +125 °C	XSON6	plastic extremely thin small outline package; no leads; 6 terminals; body 1 × 1 × 0.5 mm	SOT891
74LVC2GU04GN	–40 °C to +125 °C	XSON6	extremely thin small outline package; no leads; 6 terminals; body 0.9 × 1.0 × 0.35 mm	SOT1115
74LVC2GU04GS	–40 °C to +125 °C	XSON6	extremely thin small outline package; no leads; 6 terminals; body 1.0 × 1.0 × 0.35 mm	SOT1202

4. Marking

Table 2. Marking codes

Type number	Marking[1]
74LVC2GU04GW	YD
74LVC2GU04GV	VU4
74LVC2GU04GM	YD
74LVC2GU04GF	YD
74LVC2GU04GN	YD
74LVC2GU04GS	YD

[1] The pin 1 indicator is located on the lower left corner of the device, below the marking code.

5. Functional diagram

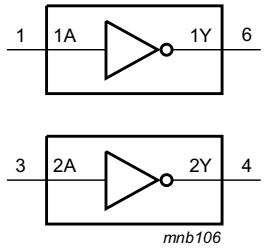

Fig 1. Logic symbol

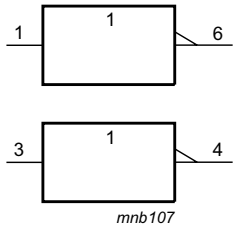

Fig 2. IEC logic symbol

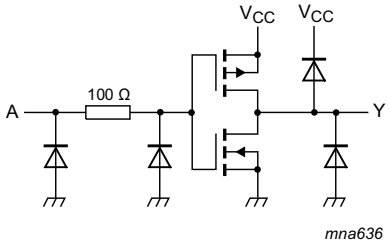

Fig 3. Logic diagram (one gate)

6. Pinning information

6.1 Pinning

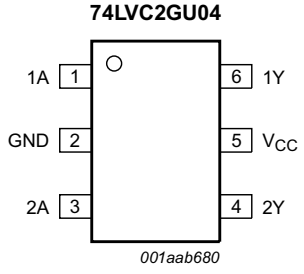

Fig 4. Pin configuration SOT363 and SOT457

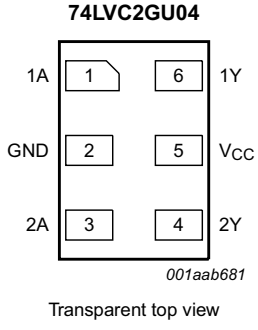

Fig 5. Pin configuration SOT886

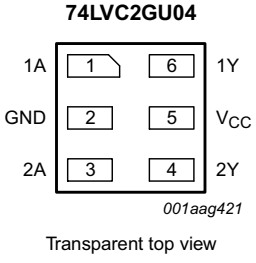

Fig 6. Pin configuration SOT891, SOT1115 and SOT1202

All information provided in this document is subject to legal disclaimers.

© NXP Semiconductors N.V. 2017. All rights reserved.

6.2 Pin description

Table 3. Pin description

Symbol	Pin	Description
1A	1	data input
GND	2	ground (0 V)
2A	3	data input
2Y	4	data output
V_{CC}	5	supply voltage
1Y	6	data output

7. Functional description

Table 4. Function table[1]

Input	Output
nA	**nY**
L	H
H	L

[1] H = HIGH voltage level; L = LOW voltage level.

8. Limiting values

Table 5. Limiting values

In accordance with the Absolute Maximum Rating System (IEC 60134). Voltages are referenced to GND (ground = 0 V).

Symbol	Parameter	Conditions		Min	Max	Unit
V_{CC}	supply voltage			–0.5	+6.5	V
I_{IK}	input clamping current	V_I < 0 V		–50	-	mA
V_I	input voltage		[1]	–0.5	+6.5	V
I_{OK}	output clamping current	V_O < 0 V		–50	-	mA
V_O	output voltage	Active mode	[1][2]	–0.5	V_{CC} + 0.5	V
I_O	output current	V_O = 0 V to V_{CC}		-	±50	mA
I_{CC}	supply current			-	100	mA
I_{GND}	ground current			–100	-	mA
T_{stg}	storage temperature			–65	+150	°C
P_{tot}	total power dissipation	T_{amb} = –40 °C to +125 °C	[3]	-	250	mW

[1] The minimum input and output voltage ratings may be exceeded if the input and output current ratings are observed.

[2] When V_{CC} = 0 V (Power-down mode), the output voltage can be 5.5 V in normal operation.

[3] For SC-88 and SC-74 packages: above 87.5 °C the value of P_{tot} derates linearly with 4.0 mW/K.
For XSON6 packages: above 118 °C the value of P_{tot} derates linearly with 7.8 mW/K.

All information provided in this document is subject to legal disclaimers.

© NXP Semiconductors N.V. 2017. All rights reserved.

9. Recommended operating conditions

Table 6. Recommended operating conditions

Voltages are referenced to GND (ground = 0 V).

Symbol	Parameter	Conditions	Min	Typ	Max	Unit
V_{CC}	supply voltage		1.65	-	5.5	V
V_I	input voltage		0	-	5.5	V
V_O	output voltage	Active mode	0	-	V_{CC}	V
T_{amb}	ambient temperature		−40	-	+125	°C
$\Delta t/\Delta V$	input transition rise and fall rate	V_{CC} = 1.65 V to 2.7 V	-	-	20	ns/V
		V_{CC} = 2.7 V to 5.5 V	-	-	10	ns/V

10. Static characteristics

Table 7. Static characteristics

At recommended operating conditions; voltages are referenced to GND (ground = 0 V).

Symbol	Parameter	Conditions	Min	Typ	Max	Unit
T_{amb} = −40 °C to +85 °C[1]						
V_{IH}	HIGH-level input voltage	V_{CC} = 1.65 V to 5.5 V	0.75 × V_{CC}	-	-	V
V_{IL}	LOW-level input voltage	V_{CC} = 1.65 V to 5.5 V	-	-	0.25 × V_{CC}	V
V_{OH}	HIGH-level output voltage	$V_I = V_{IH}$ or V_{IL}				
		I_O = −100 μA; V_{CC} = 1.65 V to 5.5 V	V_{CC} − 0.1	-	-	V
		I_O = −4 mA; V_{CC} = 1.65 V	1.2	-	-	V
		I_O = −8 mA; V_{CC} = 2.3 V	1.9	-	-	V
		I_O = −12 mA; V_{CC} = 2.7 V	2.2	-	-	V
		I_O = −24 mA; V_{CC} = 3.0 V	2.3	-	-	V
		I_O = −32 mA; V_{CC} = 4.5 V	3.8	-	-	V
V_{OL}	LOW-level output voltage	$V_I = V_{IH}$ or V_{IL}				
		I_O = 100 μA; V_{CC} = 1.65 V to 5.5 V	-	-	0.1	V
		I_O = 4 mA; V_{CC} = 1.65 V	-	-	0.45	V
		I_O = 8 mA; V_{CC} = 2.3 V	-	-	0.3	V
		I_O = 12 mA; V_{CC} = 2.7 V	-	-	0.4	V
		I_O = 24 mA; V_{CC} = 3.0 V	-	-	0.55	V
		I_O = 32 mA; V_{CC} = 4.5 V	-	-	0.55	V
I_I	input leakage current	V_I = 5.5 V or GND; V_{CC} = 0 V to 5.5 V [2]	-	±0.1	±1	μA
I_{CC}	supply current	V_I = 5.5 V or GND; I_O = 0 A; V_{CC} = 1.65 V to 5.5 V	-	0.1	4	μA
C_I	input capacitance	V_{CC} = 3.3 V; V_I = GND to V_{CC}	-	5	-	pF

All information provided in this document is subject to legal disclaimers.

© NXP Semiconductors N.V. 2017. All rights reserved.

Table 7. Static characteristics *...continued*

At recommended operating conditions; voltages are referenced to GND (ground = 0 V).

Symbol	Parameter	Conditions	Min	Typ	Max	Unit
T_{amb} = –40 °C to +125 °C						
V_{IH}	HIGH-level input voltage	V_{CC} = 1.65 V to 5.5 V	0.8 × V_{CC}	-	-	V
V_{IL}	LOW-level input voltage	V_{CC} = 1.65 V to 5.5 V	-	-	0.2 × V_{CC}	V
V_{OH}	HIGH-level output voltage	V_I = V_{IH} or V_{IL}				
		I_O = –100 μA; V_{CC} = 1.65 V to 5.5 V	V_{CC} – 0.1	-	-	V
		I_O = –4 mA; V_{CC} = 1.65 V	0.95	-	-	V
		I_O = –8 mA; V_{CC} = 2.3 V	1.7	-	-	V
		I_O = –12 mA; V_{CC} = 2.7 V	1.9	-	-	V
		I_O = –24 mA; V_{CC} = 3.0 V	2.0	-	-	V
		I_O = –32 mA; V_{CC} = 4.5 V	3.4	-	-	V
V_{OL}	LOW-level output voltage	V_I = V_{IH} or V_{IL}				
		I_O = 100 μA; V_{CC} = 1.65 V to 5.5 V	-	-	0.1	V
		I_O = 4 mA; V_{CC} = 1.65 V	-	-	0.7	V
		I_O = 8 mA; V_{CC} = 2.3 V	-	-	0.45	V
		I_O = 12 mA; V_{CC} = 2.7 V	-	-	0.6	V
		I_O = 24 mA; V_{CC} = 3.0 V	-	-	0.8	V
		I_O = 32 mA; V_{CC} = 4.5 V	-	-	0.8	V
I_I	input leakage current	V_I = 5.5 V or GND; V_{CC} = 0 V to 5.5 V	-	-	±1	μA
I_{CC}	supply current	V_I = 5.5 V or GND; I_O = 0 A; V_{CC} = 1.65 V to 5.5 V	-	-	4	μA

[1] All typical values are measured at T_{amb} = 25 °C.

[2] These typical values are measured at V_{CC} = 3.3 V.

All information provided in this document is subject to legal disclaimers.

© NXP Semiconductors N.V. 2017. All rights reserved.

11. Dynamic characteristics

Table 8. Dynamic characteristics

Voltages are referenced to GND (ground = 0 V). For test circuit see Figure 8.

Symbol	Parameter	Conditions	–40 °C to +85 °C			–40 °C to +125 °C		Unit
			Min	Typ[1]	Max	Min	Max	
t_{pd}	propagation delay	nA to nY; see Figure 7 [2]						
		V_{CC} = 1.65 V to 1.95 V	0.5	2.3	5.0	0.5	6.3	ns
		V_{CC} = 2.3 V to 2.7 V	0.3	1.8	4.0	0.3	5.0	ns
		V_{CC} = 2.7 V	0.3	2.6	4.5	0.3	5.6	ns
		V_{CC} = 3.0 V to 3.6 V	0.3	2.3	3.7	0.3	4.5	ns
		V_{CC} = 4.5 V to 5.5 V	0.3	1.7	3.0	0.3	3.8	ns
C_{PD}	power dissipation capacitance	V_I = GND to V_{CC}; V_{CC} = 3.3 V [3]	-	7.8	-			pF

[1] Typical values are measured at T_{amb} = 25 °C and V_{CC} = 1.8 V, 2.5 V, 2.7 V, 3.3 V and 5.0 V respectively.

[2] t_{pd} is the same as t_{PLH} and t_{PHL}.

[3] C_{PD} is used to determine the dynamic power dissipation (P_D in μW).

$P_D = C_{PD} \times V_{CC}^2 \times f_i \times N + \Sigma(C_L \times V_{CC}^2 \times f_o)$ where:

f_i = input frequency in MHz;

f_o = output frequency in MHz;

C_L = output load capacitance in pF;

V_{CC} = supply voltage in V;

N = number of inputs switching;

$\Sigma(C_L \times V_{CC}^2 \times f_o)$ = sum of outputs.

12. Waveforms

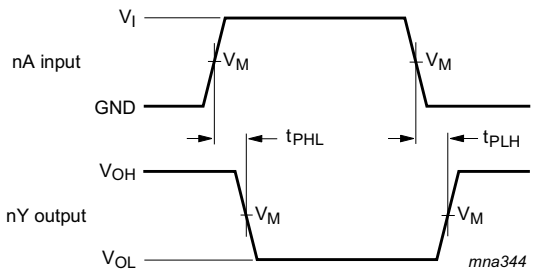

Measurement points are given in Table 9.

V_{OL} and V_{OH} are typical output voltage drop that occur with the output load.

Fig 7. The input (nA) to output (nY) propagation delay times

All information provided in this document is subject to legal disclaimers.

© NXP Semiconductors N.V. 2017. All rights reserved.

Table 9. Measurement points

Supply voltage	Input	Output
V_{CC}	V_M	V_M
1.65 V to 1.95 V	$0.5 \times V_{CC}$	$0.5 \times V_{CC}$
2.3 V to 2.7 V	$0.5 \times V_{CC}$	$0.5 \times V_{CC}$
2.7 V	1.5 V	1.5 V
3.0 V to 3.6 V	1.5 V	1.5 V
4.5 V to 5.5 V	$0.5 \times V_{CC}$	$0.5 \times V_{CC}$

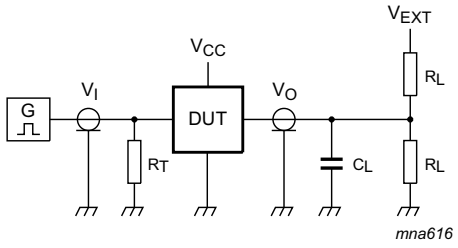

Test data is given in Table 10.

Definitions for test circuit:

R_L = Load resistance.

C_L = Load capacitance including jig and probe capacitance.

R_T = Termination resistance should be equal to the output impedance Z_o of the pulse generator.

V_{EXT} = External voltage for measuring switching times.

Fig 8. Test circuit for measuring switching times

Table 10. Test data

Supply voltage	Input		Load		V_{EXT}
V_{CC}	V_I	$t_r = t_f$	C_L	R_L	t_{PLH}, t_{PHL}
1.65 V to 1.95 V	V_{CC}	≤ 2.0 ns	30 pF	1 kΩ	open
2.3 V to 2.7 V	V_{CC}	≤ 2.0 ns	30 pF	500 Ω	open
2.7 V	2.7 V	≤ 2.5 ns	50 pF	500 Ω	open
3.0 V to 3.6 V	2.7 V	≤ 2.5 ns	50 pF	500 Ω	open
4.5 V to 5.5 V	V_{CC}	≤ 2.5 ns	50 pF	500 Ω	open

All information provided in this document is subject to legal disclaimers.

© NXP Semiconductors N.V. 2017. All rights reserved.

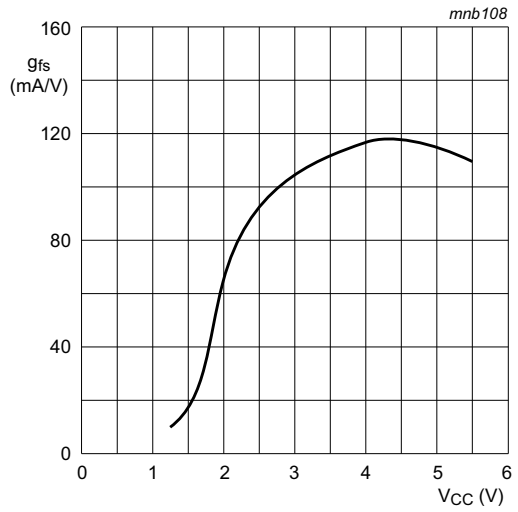

T_{amb} = 25 °C.

Fig 9. Typical forward transconductance as a function of supply voltage

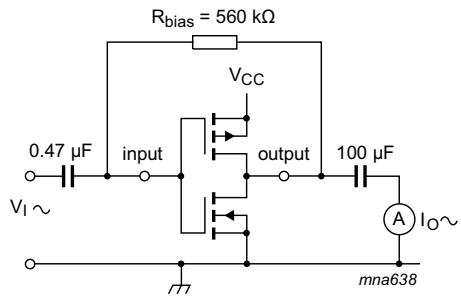

$$g_{fs} = \frac{\Delta I_O}{\Delta V_I}$$

f_i = 1 kHz.

V_O is constant.

Fig 10. Test set-up for measuring forward transconductance

All information provided in this document is subject to legal disclaimers.

© NXP Semiconductors N.V. 2017. All rights reserved.

13. Application information

Some applications are:

- Linear amplifier (see Figure 11)
- In crystal oscillator design (see Figure 12)

Remark: All values given are typical unless otherwise specified.

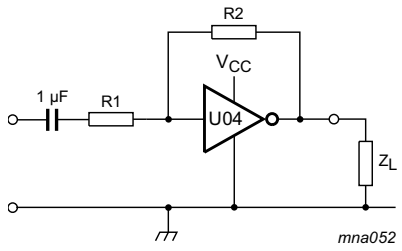

$V_{o(p-p)} = V_{CC} - 1.5$ V centered at $0.5V_{CC}$.

$$A_u = -\frac{G_{OL}}{1 + \frac{R1}{R2}(1 + G_{OL})}$$

G_{OL} = open loop gain.

A_u = voltage amplification.

R1 ≥ 3 kΩ, R2 ≤ 1 MΩ.

Z_L > 10 kΩ; A_{OL} = 20 (typical).

Typical unity gain bandwidth product is 5 MHz.

Fig 11. Linear amplifier configuration

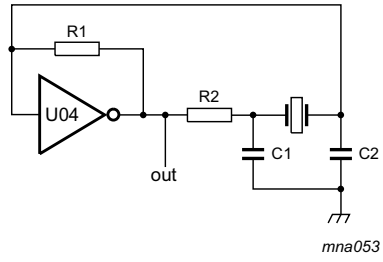

C1 = 47 pF (typical).

C2 = 22 pF (typical).

R1 = 1 MΩ to 10 MΩ (typical).

R2 optimum value depends on the frequency and required stability against changes in V_{CC} or average minimum I_{CC} (I_{CC} is typically 2 mA at V_{CC} = 3.3 V and f = 10 MHz).

Fig 12. Crystal oscillator configuration

All information provided in this document is subject to legal disclaimers.

© NXP Semiconductors N.V. 2017. All rights reserved.

14. Package outline

Plastic surface-mounted package; 6 leads **SOT363**

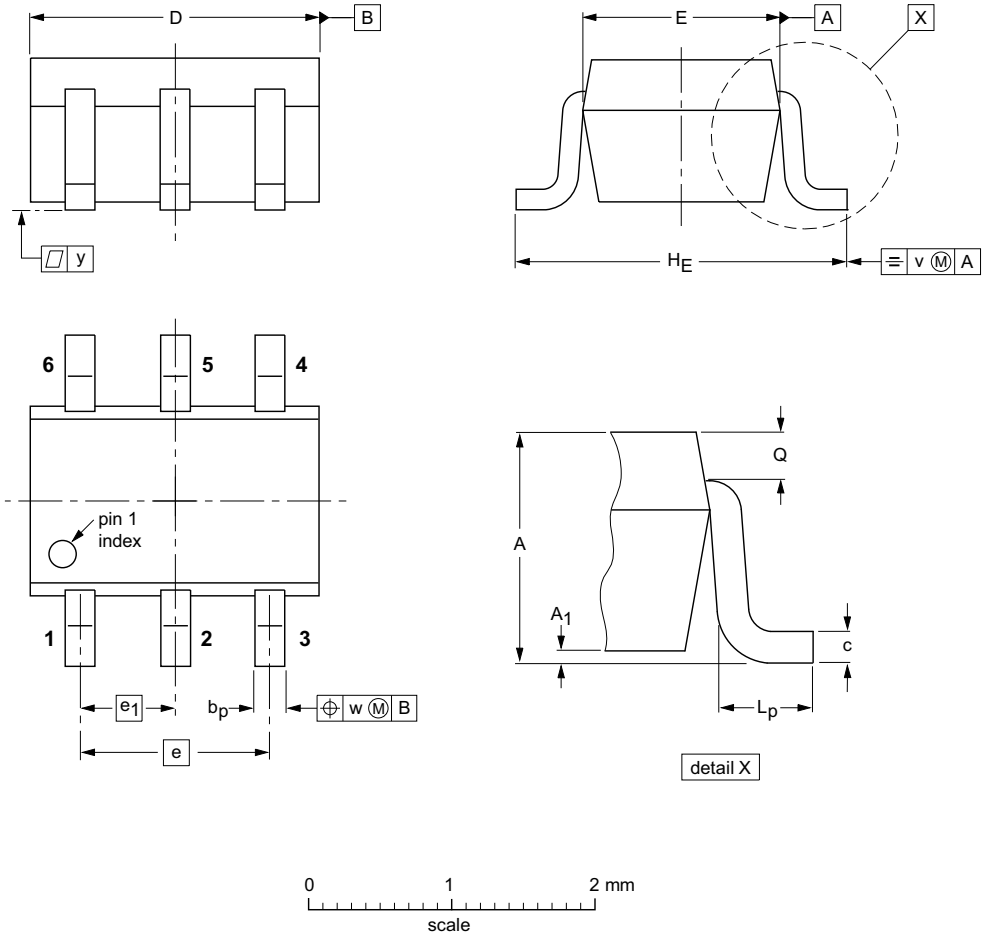

DIMENSIONS (mm are the original dimensions)

UNIT	A	A_1 max	b_p	c	D	E	e	e_1	H_E	L_p	Q	v	w	y
mm	1.1 0.8	0.1	0.30 0.20	0.25 0.10	2.2 1.8	1.35 1.15	1.3	0.65	2.2 2.0	0.45 0.15	0.25 0.15	0.2	0.2	0.1

OUTLINE VERSION	REFERENCES				EUROPEAN PROJECTION	ISSUE DATE
	IEC	JEDEC	JEITA			
SOT363			SC-88			~~04-11-08~~ 06-03-16

Fig 13. Package outline SOT363 (SC-88)

All information provided in this document is subject to legal disclaimers.

© NXP Semiconductors N.V. 2017. All rights reserved.

Plastic surface-mounted package (TSOP6); 6 leads **SOT457**

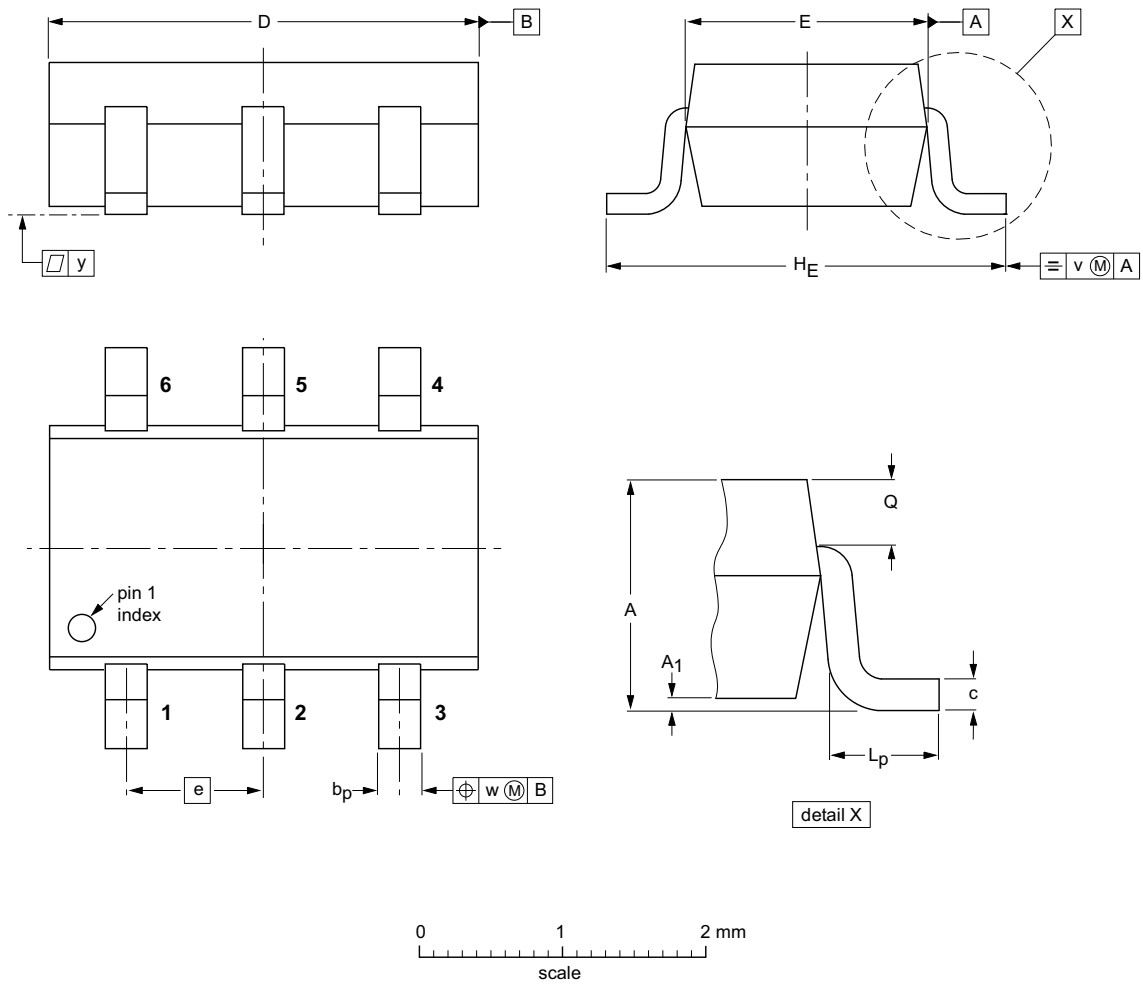

DIMENSIONS (mm are the original dimensions)

UNIT	A	A_1	b_p	c	D	E	e	H_E	L_p	Q	v	w	y
mm	1.1 0.9	0.1 0.013	0.40 0.25	0.26 0.10	3.1 2.7	1.7 1.3	0.95	3.0 2.5	0.6 0.2	0.33 0.23	0.2	0.2	0.1

OUTLINE VERSION	REFERENCES				EUROPEAN PROJECTION	ISSUE DATE
	IEC	JEDEC	JEITA			
SOT457			SC-74			~~05-11-07~~ 06-03-16

Fig 14. Package outline SOT457 (TSOP6)

All information provided in this document is subject to legal disclaimers.

© NXP Semiconductors N.V. 2017. All rights reserved.

XSON6: plastic extremely thin small outline package; no leads; 6 terminals; body 1 x 1.45 x 0.5 mm SOT886

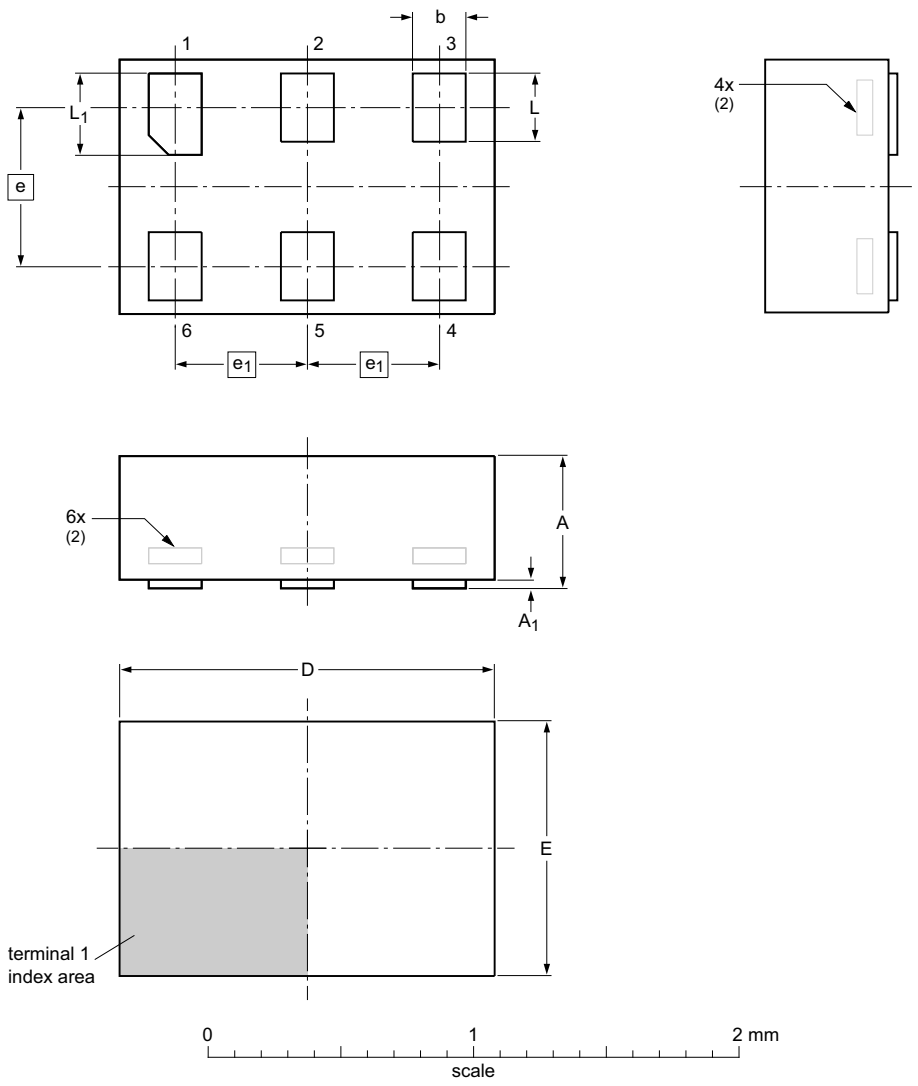

Dimensions (mm are the original dimensions)

Unit		A(1)	A_1	b	D	E	e	e_1	L	L_1
mm	max	0.5	0.04	0.25	1.50	1.05			0.35	0.40
	nom			0.20	1.45	1.00	0.6	0.5	0.30	0.35
	min			0.17	1.40	0.95			0.27	0.32

Notes
1. Including plating thickness.
2. Can be visible in some manufacturing processes.

sot886_po

Outline version	References				European projection	Issue date
	IEC	JEDEC	JEITA			
SOT886		MO-252				~~04-07-22~~ 12-01-05

Fig 15. Package outline SOT886 (XSON6)

All information provided in this document is subject to legal disclaimers.

© NXP Semiconductors N.V. 2017. All rights reserved.

XSON6: plastic extremely thin small outline package; no leads; 6 terminals; body 1 x 1 x 0.5 mm **SOT891**

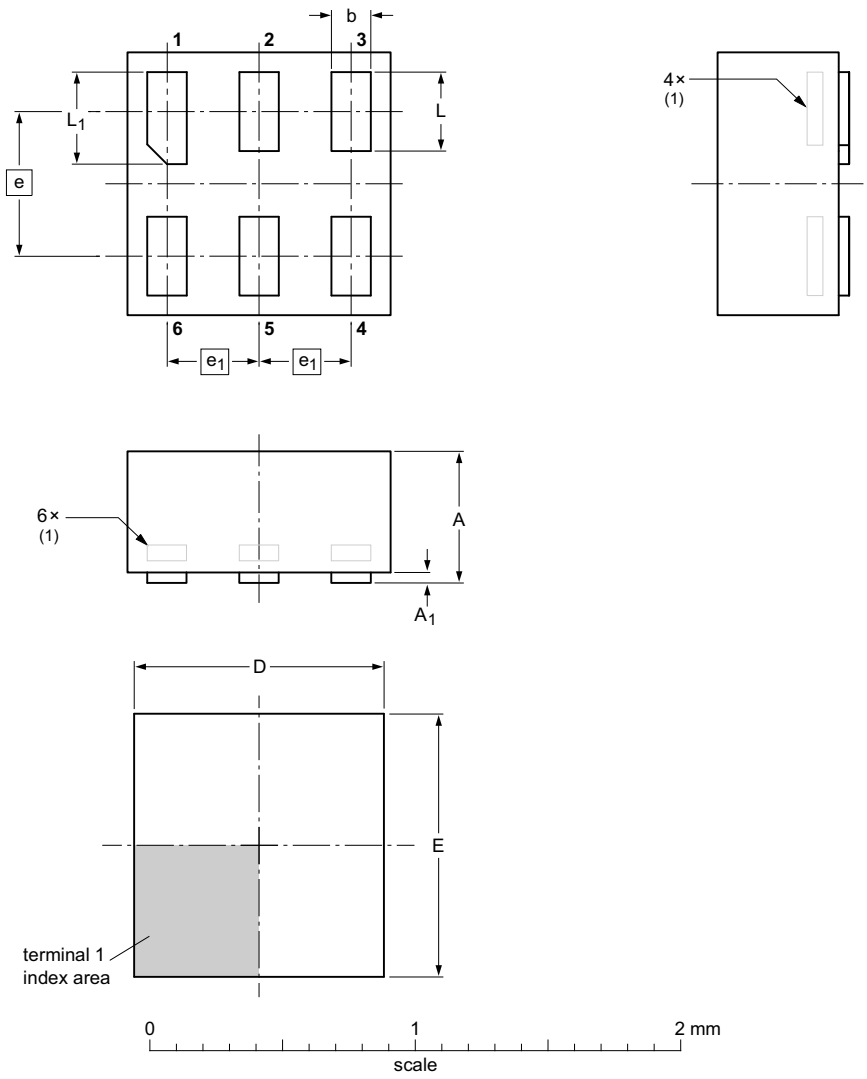

DIMENSIONS (mm are the original dimensions)

UNIT	A max	A_1 max	b	D	E	e	e_1	L	L_1
mm	0.5	0.04	0.20 0.12	1.05 0.95	1.05 0.95	0.55	0.35	0.35 0.27	0.40 0.32

Note

1. Can be visible in some manufacturing processes.

OUTLINE VERSION	REFERENCES				EUROPEAN PROJECTION	ISSUE DATE
	IEC	JEDEC	JEITA			
SOT891						~~05-04-06~~ 07-05-15

Fig 16. Package outline SOT891 (XSON6)

All information provided in this document is subject to legal disclaimers.

© NXP Semiconductors N.V. 2017. All rights reserved.

XSON6: extremely thin small outline package; no leads; 6 terminals; body 0.9 x 1.0 x 0.35 mm **SOT1115**

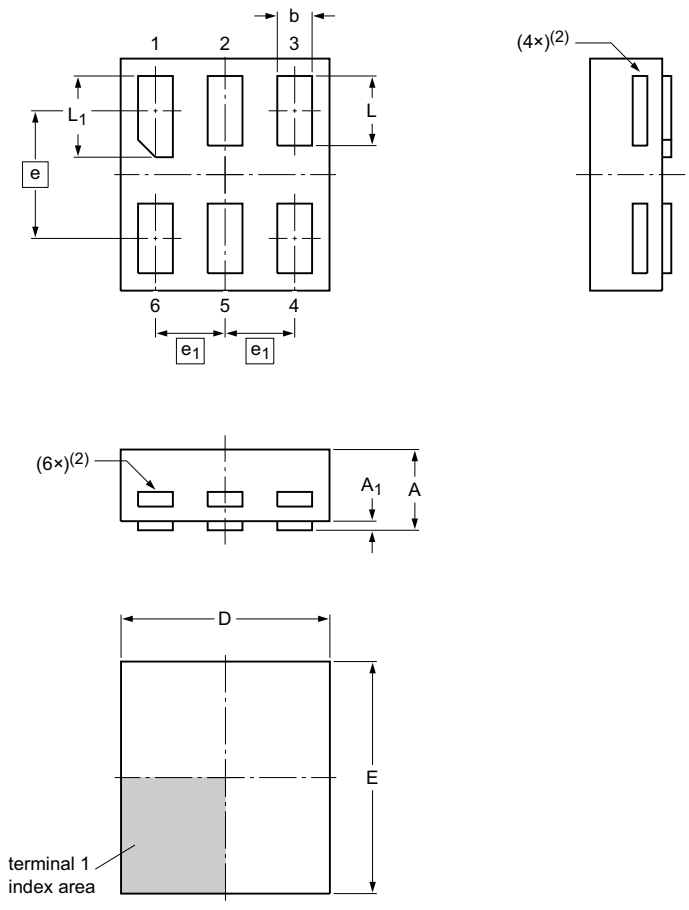

Dimensions

Unit		A(1)	A_1	b	D	E	e	e_1	L	L_1
mm	max	0.35	0.04	0.20	0.95	1.05			0.35	0.40
	nom			0.15	0.90	1.00	0.55	0.3	0.30	0.35
	min			0.12	0.85	0.95			0.27	0.32

Note
1. Including plating thickness.
2. Visible depending upon used manufacturing technology.

sot1115_po

Outline version	References				European projection	Issue date
	IEC	JEDEC	JEITA			
SOT1115						~~10-04-02~~ 10-04-07

Fig 17. Package outline SOT1115 (XSON6)

All information provided in this document is subject to legal disclaimers.

© NXP Semiconductors N.V. 2017. All rights reserved.

XSON6: extremely thin small outline package; no leads; 6 terminals; body 1.0 x 1.0 x 0.35 mm **SOT1202**

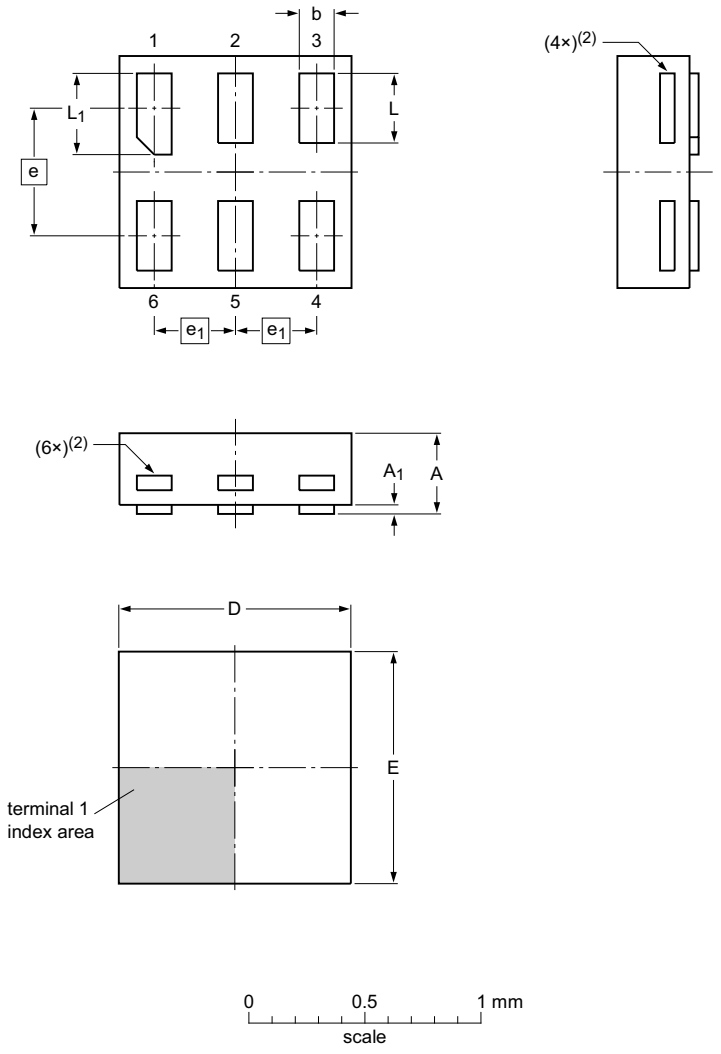

Dimensions

Unit		A(1)	A_1	b	D	E	e	e_1	L	L_1
mm	max	0.35	0.04	0.20	1.05	1.05			0.35	0.40
	nom			0.15	1.00	1.00	0.55	0.35	0.30	0.35
	min			0.12	0.95	0.95			0.27	0.32

Note
1. Including plating thickness.
2. Visible depending upon used manufacturing technology.

sot1202_po

Outline version	References				European projection	Issue date
	IEC	JEDEC	JEITA			
SOT1202						~~10-04-02~~ 10-04-06

Fig 18. Package outline SOT1202 (XSON6)

All information provided in this document is subject to legal disclaimers.

© NXP Semiconductors N.V. 2017. All rights reserved.

15. Abbreviations

Table 11. Abbreviations

Acronym	Description
CMOS	Complementary Metal Oxide Semiconductor
DUT	Device Under Test
ESD	ElectroStatic Discharge
HBM	Human Body Model
MM	Machine Model

16. Revision history

Table 12. Revision history

Document ID	Release date	Data sheet status	Change notice	Supersedes
74LVC2GU04 v.10	20170210	Product data sheet	-	74LVC2GU04 v.9
Modifications:	• Watermarks removed.			
74LVC2GU04 v.9	20161215	Product data sheet	-	74LVC2GU04 v.8
Modifications:	• Table 7: The maximum limits for leakage current and supply current have changed.			
74LVC2GU04 v.8	20120703	Product data sheet	-	74LVC2GU04 v.7
Modifications:	• Package outline drawing of SOT886 (Figure 15) modified.			
74LVC2GU04 v.7	20111128	Product data sheet	-	74LVC2GU04 v.6
Modifications:	• Legal pages updated.			
74LVC2GU04 v.6	20101027	Product data sheet	-	74LVC2GU04 v.5
74LVC2GU04 v.5	20091027	Product data sheet	-	74LVC2GU04 v.4
74LVC2GU04 v.4	20070521	Product data sheet	-	74LVC2GU04 v.3
74LVC2GU04 v.3	20040921	Product specification	-	74LVC2GU04 v.2
74LVC2GU04 v.2	20040524	Product specification	-	74LVC2GU04 v.1
74LVC2GU04 v.1	20030829	Product specification	-	-

All information provided in this document is subject to legal disclaimers.

© NXP Semiconductors N.V. 2017. All rights reserved.

17. Legal information

17.1 Data sheet status

Document status[1][2]	Product status[3]	Definition
Objective [short] data sheet	Development	This document contains data from the objective specification for product development.
Preliminary [short] data sheet	Qualification	This document contains data from the preliminary specification.
Product [short] data sheet	Production	This document contains the product specification.

[1] Please consult the most recently issued document before initiating or completing a design.

[2] The term 'short data sheet' is explained in section "Definitions".

[3] The product status of device(s) described in this document may have changed since this document was published and may differ in case of multiple devices. The latest product status information is available on the Internet at URL http://www.nxp.com.

17.2 Definitions

Draft — The document is a draft version only. The content is still under internal review and subject to formal approval, which may result in modifications or additions. NXP Semiconductors does not give any representations or warranties as to the accuracy or completeness of information included herein and shall have no liability for the consequences of use of such information.

Short data sheet — A short data sheet is an extract from a full data sheet with the same product type number(s) and title. A short data sheet is intended for quick reference only and should not be relied upon to contain detailed and full information. For detailed and full information see the relevant full data sheet, which is available on request via the local NXP Semiconductors sales office. In case of any inconsistency or conflict with the short data sheet, the full data sheet shall prevail.

Product specification — The information and data provided in a Product data sheet shall define the specification of the product as agreed between NXP Semiconductors and its customer, unless NXP Semiconductors and customer have explicitly agreed otherwise in writing. In no event however, shall an agreement be valid in which the NXP Semiconductors product is deemed to offer functions and qualities beyond those described in the Product data sheet.

17.3 Disclaimers

Limited warranty and liability — Information in this document is believed to be accurate and reliable. However, NXP Semiconductors does not give any representations or warranties, expressed or implied, as to the accuracy or completeness of such information and shall have no liability for the consequences of use of such information. NXP Semiconductors takes no responsibility for the content in this document if provided by an information source outside of NXP Semiconductors.

In no event shall NXP Semiconductors be liable for any indirect, incidental, punitive, special or consequential damages (including - without limitation - lost profits, lost savings, business interruption, costs related to the removal or replacement of any products or rework charges) whether or not such damages are based on tort (including negligence), warranty, breach of contract or any other legal theory.

Notwithstanding any damages that customer might incur for any reason whatsoever, NXP Semiconductors' aggregate and cumulative liability towards customer for the products described herein shall be limited in accordance with the *Terms and conditions of commercial sale* of NXP Semiconductors.

Right to make changes — NXP Semiconductors reserves the right to make changes to information published in this document, including without limitation specifications and product descriptions, at any time and without notice. This document supersedes and replaces all information supplied prior to the publication hereof.

Suitability for use — NXP Semiconductors products are not designed, authorized or warranted to be suitable for use in life support, life-critical or safety-critical systems or equipment, nor in applications where failure or malfunction of an NXP Semiconductors product can reasonably be expected to result in personal injury, death or severe property or environmental damage. NXP Semiconductors and its suppliers accept no liability for inclusion and/or use of NXP Semiconductors products in such equipment or applications and therefore such inclusion and/or use is at the customer's own risk.

Applications — Applications that are described herein for any of these products are for illustrative purposes only. NXP Semiconductors makes no representation or warranty that such applications will be suitable for the specified use without further testing or modification.

Customers are responsible for the design and operation of their applications and products using NXP Semiconductors products, and NXP Semiconductors accepts no liability for any assistance with applications or customer product design. It is customer's sole responsibility to determine whether the NXP Semiconductors product is suitable and fit for the customer's applications and products planned, as well as for the planned application and use of customer's third party customer(s). Customers should provide appropriate design and operating safeguards to minimize the risks associated with their applications and products.

NXP Semiconductors does not accept any liability related to any default, damage, costs or problem which is based on any weakness or default in the customer's applications or products, or the application or use by customer's third party customer(s). Customer is responsible for doing all necessary testing for the customer's applications and products using NXP Semiconductors products in order to avoid a default of the applications and the products or of the application or use by customer's third party customer(s). NXP does not accept any liability in this respect.

Limiting values — Stress above one or more limiting values (as defined in the Absolute Maximum Ratings System of IEC 60134) will cause permanent damage to the device. Limiting values are stress ratings only and (proper) operation of the device at these or any other conditions above those given in the Recommended operating conditions section (if present) or the Characteristics sections of this document is not warranted. Constant or repeated exposure to limiting values will permanently and irreversibly affect the quality and reliability of the device.

Terms and conditions of commercial sale — NXP Semiconductors products are sold subject to the general terms and conditions of commercial sale, as published at http://www.nxp.com/profile/terms, unless otherwise agreed in a valid written individual agreement. In case an individual agreement is concluded only the terms and conditions of the respective agreement shall apply. NXP Semiconductors hereby expressly objects to applying the customer's general terms and conditions with regard to the purchase of NXP Semiconductors products by customer.

No offer to sell or license — Nothing in this document may be interpreted or construed as an offer to sell products that is open for acceptance or the grant, conveyance or implication of any license under any copyrights, patents or other industrial or intellectual property rights.

All information provided in this document is subject to legal disclaimers.

© NXP Semiconductors N.V. 2017. All rights reserved.

Export control — This document as well as the item(s) described herein may be subject to export control regulations. Export might require a prior authorization from competent authorities.

Non-automotive qualified products — Unless this data sheet expressly states that this specific NXP Semiconductors product is automotive qualified, the product is not suitable for automotive use. It is neither qualified nor tested in accordance with automotive testing or application requirements. NXP Semiconductors accepts no liability for inclusion and/or use of non-automotive qualified products in automotive equipment or applications.

In the event that customer uses the product for design-in and use in automotive applications to automotive specifications and standards, customer (a) shall use the product without NXP Semiconductors' warranty of the product for such automotive applications, use and specifications, and (b) whenever customer uses the product for automotive applications beyond NXP Semiconductors' specifications such use shall be solely at customer's own risk, and (c) customer fully indemnifies NXP Semiconductors for any liability, damages or failed product claims resulting from customer design and use of the product for automotive applications beyond NXP Semiconductors' standard warranty and NXP Semiconductors' product specifications.

Translations — A non-English (translated) version of a document is for reference only. The English version shall prevail in case of any discrepancy between the translated and English versions.

17.4 Trademarks

Notice: All referenced brands, product names, service names and trademarks are the property of their respective owners.

18. Contact information

For more information, please visit: **http://www.nxp.com**

For sales office addresses, please send an email to: **salesaddresses@nxp.com**

All information provided in this document is subject to legal disclaimers.

© NXP Semiconductors N.V. 2017. All rights reserved.

19. Contents

1 General description 1
2 Features and benefits 1
3 Ordering information 1
4 Marking 2
5 Functional diagram 2
6 Pinning information 2
6.1 Pinning 2
6.2 Pin description 3
7 Functional description 3
8 Limiting values 3
9 Recommended operating conditions 4
10 Static characteristics 4
11 Dynamic characteristics 6
12 Waveforms 6
13 Application information 9
14 Package outline 10
15 Abbreviations 16
16 Revision history 16
17 Legal information 17
17.1 Data sheet status 17
17.2 Definitions 17
17.3 Disclaimers 17
17.4 Trademarks 18
18 Contact information 18
19 Contents 19

Please be aware that important notices concerning this document and the product(s) described herein, have been included in section ‘Legal information’.

© NXP Semiconductors N.V. 2017. All rights reserved.

For more information, please visit: http://www.nxp.com
For sales office addresses, please send an email to: salesaddresses@nxp.com

Date of release: 10 February 2017
Document identifier: 74LVC2GU04