Your Expert Partner for **Human Machine Interfaces**

Illuminated selector switch

82-6111.2254

https://www.eao.com/component/82-6111.2254/en...

sales@prom-elec.com / ООО ПРОМЭЛЕКТРОНИКА

Your product:

82-6111.2254
Illuminated selector switch

FRONT

Front dimension:	Ø 25 mm
Front form:	Round
Front bezel material:	Stainless steel
Front bezel shape:	Flush

MOUNTING

Mounting cut-out:	Ø 22 mm
Mounting type:	Panel mounting

OPERATING-/INDICATION PART

Lens colour:	Silver
Lens material:	Stainless steel
Lens illumination:	Illuminated
Lens shape:	Flush
Lens optics:	opaque
Illumination colour:	White
Shape of illumination:	Dot

ELECTRICAL CHARACTERISTICS

Switching voltage and switching current:

according to IEC 60947-5-1 (Silver contacts)
Service categorie AC-15

Voltage	Current
24 VAC	1 A
35 VAC	1 A (M12 version)
110 VAC	1 A
220 VAC	0.5 A

Switch rating DC service categorie DC-13 (Silver contacts)

Voltage	Current
24 VDC	0.7 A
35 VDC	0.5 A (M12 version)
110 VDC	0.2 A
220 VDC	0.1 A

according to UL 508 (Silver contacts)
cosφ 0,75 … 0,8

Voltage	Current
120 VAC	5 A
240 VAC	3 A
24 VAC	1 A

Contacts: 1 C

Operating voltage: 24 V DC

Rated Operational Voltage Ue: 250 VAC

Rated insulation voltage Ui: 250 V

Switching rating: 240 V

Electrical lifetime: 50 000 cycles of operation

Electric strength: 1500 VAC, 50 Hz 1 minute between life terminals and ground

Pollution degree: 2, according to EN IEC 60947-1

Thermal current Ith: 5 A

MECHANICAL CHARACTERISTICS

Terminal: Plug-in terminal

Contact material: Silver

Switching action: Rest - Maintained

Switching system: Snap-action switching element

Switching positions: 2 positions

Switching angle: 90° right

Operating force: 4 N … 7 N

Operating Travel: ca. 3 mm

Tightening torque: 0.5 … 0.6 Nm, Screw terminal 0.1 Nm

Weight: 0.027 kg

AMBIENT CONDITION

IP front protection:	IP65
Operating temperature:	– 30 °C ... + 70 °C
Storage temperature:	– 40 °C ... + 80 °C
Shock resistance:	Max. 500 m / s^2 as per IEC 60068-2-27
Vibration resistance:	10 ... 500 Hz, amplitude 1.5 mm p-p according to IEC 60068-2-6
Climate resistance:	Damp heat, 21 days according to IEC 60512-11

CERTIFICATE

Approbations:	CB, CCC, C UL, UL
Conformities:	CE, 2011 / 65 / EC (RoHS), 2014 / 35 / EU (LVD)
REACH:	REACH compliant
RoHS:	RoHS compliant

OTHER

Short Description:	Illuminated selector switch, Rest - Maintained, 240 V, 24 V DC, 1 C, Plug-in terminal, Round, Stainless steel, White, Silver
Kind of illlumination:	Single-LED
Housing size:	19 mm
Housing material:	Plastic
Switching positions:	

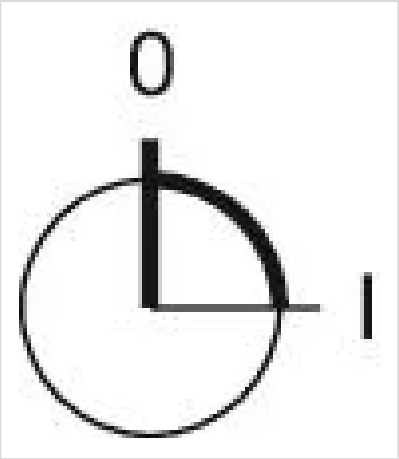

Wiring diagrams:

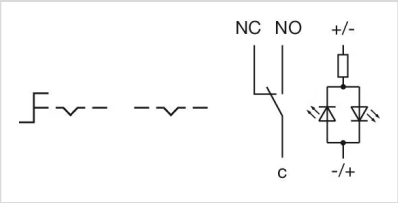

Component layouts:

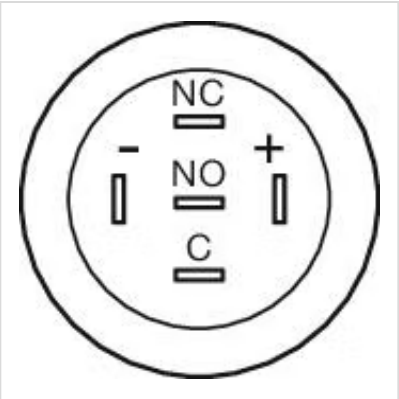

Mounting cut-outs:

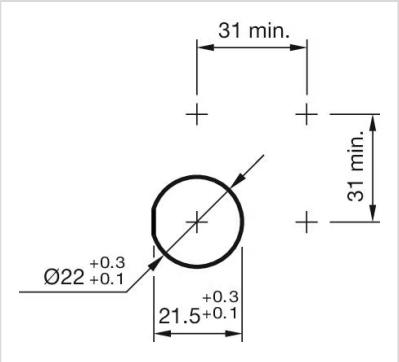
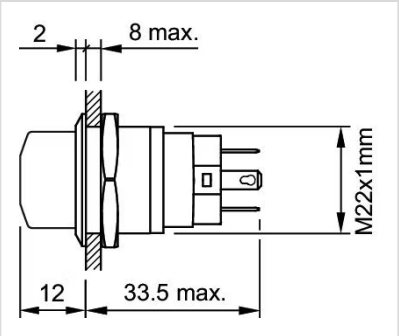
Dimension drawings: