74HC4094; 74HCT4094

8-stage shift-and-store bus register

Rev. 6 — 31 December 2012 Product data sheet

1. General description

The 74HC4094; 74HCT4094 is an 8-bit serial-in/serial or parallel-out shift register with a storage register and 3-state outputs. Both the shift and storage register have separate clocks. The device features a serial input (D) and two serial outputs (QS1 and QS2) to enable cascading. Data is shifted on the LOW-to-HIGH transitions of the CP input. Data is available at QS1 on the LOW-to-HIGH transitions of the CP input to allow cascading when clock edges are fast. The same data is available at QS2 on the next HIGH-to-LOW transition of the CP input to allow cascading when clock edges are slow. The data in the shift register is transferred to the storage register when the STR input is HIGH. Data in the storage register appears at the outputs whenever the output enable input (OE) is HIGH. A LOW on OE causes the outputs to assume a high-impedance OFF-state. Operation of the OE input does not affect the state of the registers. Inputs include clamp diodes. This enables the use of current limiting resistors to interface inputs to voltages in excess of V_{CC}.

2. Features and benefits

- Complies with JEDEC standard JESD7A
- Input levels:
  - For 74HC4094: CMOS level
  - For 74HCT4094: TTL level
- Low-power dissipation
- ESD protection:
  - HBM JESD22-A114F exceeds 2 000 V
  - MM JESD22-A115-A exceeds 200 V
- Specified from –40 °C to +85 °C and from –40 °C to +125 °C

3. Applications

- Serial-to-parallel data conversion
- Remote control holding register

sales@prom-elec.com / ООО ПРОМЭЛЕКТРОНИКА

4. Ordering information

Table 1. Ordering information

Type number	Package			
	Temperature range	Name	Description	Version
74HC4094N	−40 °C to +125 °C	DIP16	plastic dual in-line package; 16 leads (300 mil)	SOT38-4
74HCT4094N				
74HC4094D	−40 °C to +125 °C	SO16	plastic small outline package; 16 leads; body width 3.9 mm	SOT109-1
74HCT4094D				
74HC4094DB	−40 °C to +125 °C	SSOP16	plastic shrink small outline package; 16 leads; body width 5.3 mm	SOT338-1
74HCT4094DB				
74HC4094PW	−40 °C to +125 °C	TSSOP16	plastic thin shrink small outline package; 16 leads; body width 4.4 mm	SOT403-1

5. Functional diagram

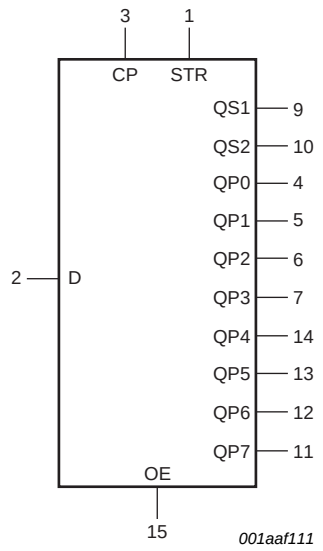

Fig 1. Functional diagram

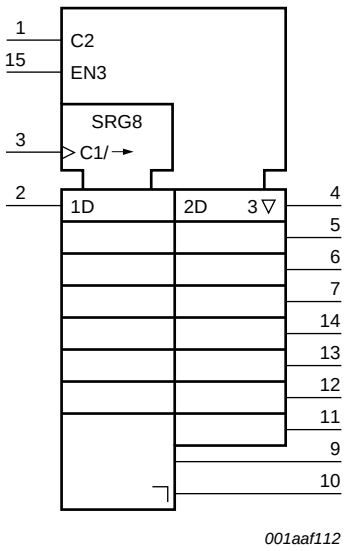

Fig 2. Logic symbol

All information provided in this document is subject to legal disclaimers.

© NXP B.V. 2012. All rights reserved.

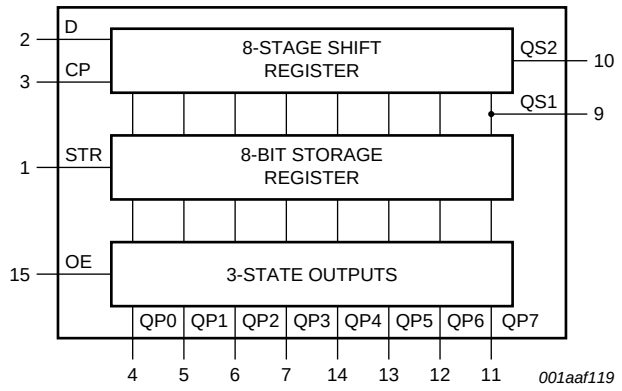

Fig 3. Logic diagram

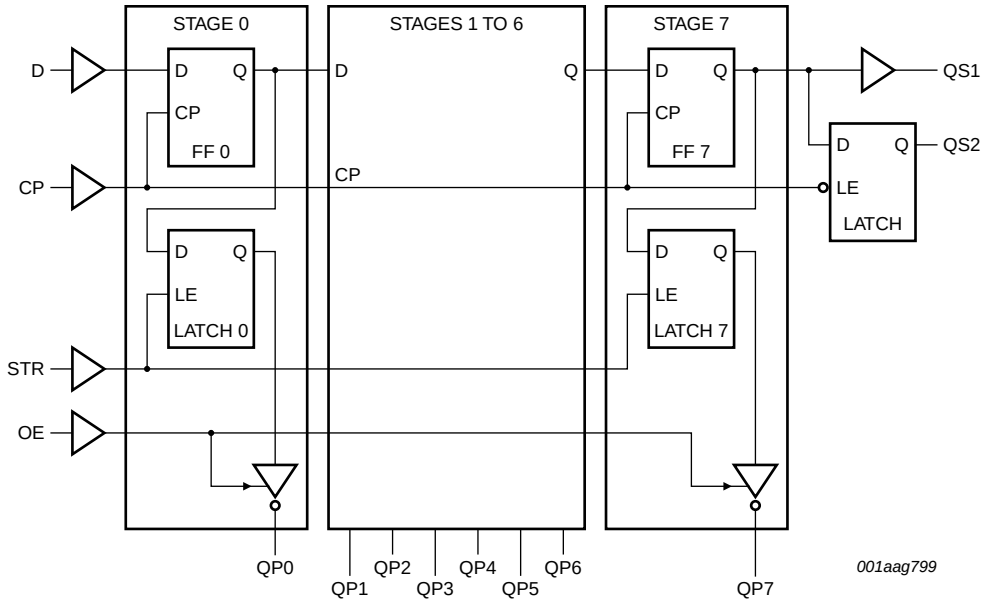

Fig 4. Logic diagram

All information provided in this document is subject to legal disclaimers.

© NXP B.V. 2012. All rights reserved.

6. Pinning information

6.1 Pinning

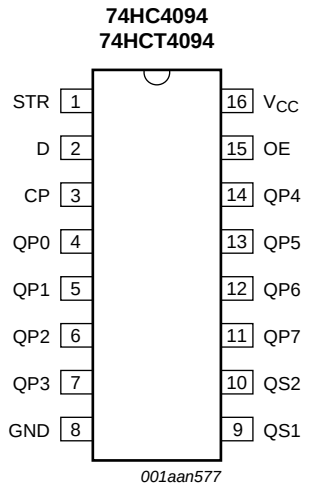

Fig 5. Pin configuration DIP16 and SO16

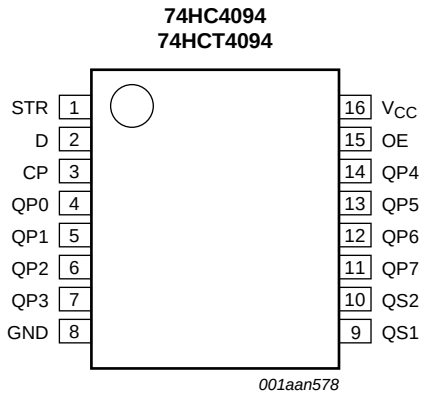

Fig 6. Pin configuration SSOP16 and TSSOP16

6.2 Pin description

Table 2. Pin description

Symbol	Pin	Description
STR	1	strobe input
D	2	data input
CP	3	clock input
QP0 to QP7	4, 5, 6, 7, 14, 13, 12, 11	parallel output
V_{SS}	8	ground supply voltage
QS1, QS2	9, 10	serial output
OE	15	output enable input
V_{DD}	16	supply voltage

All information provided in this document is subject to legal disclaimers.

© NXP B.V. 2012. All rights reserved.

7. Functional description

Table 3. Function table[1]

Inputs				Parallel outputs		Serial outputs	
CP	OE	STR	D	QP0	QPn	QS1	QS2
↑	L	X	X	Z	Z	Q6S	NC
↓	L	X	X	Z	Z	NC	Q7S
↑	H	L	X	NC	NC	Q6S	NC
↑	H	H	L	L	QPn –1	Q6S	NC
↑	H	H	H	H	QPn –1	Q6S	NC
↓	H	H	H	NC	NC	NC	Q7S

[1] At the positive clock edge, the information in the 7th register stage is transferred to the 8th register stage and the QSn outputs.
H = HIGH voltage level; L = LOW voltage level; X = don't care;
↑ = positive-going transition; ↓ = negative-going transition;
Z = HIGH-impedance OFF-state; NC = no change;
Q6S = the data in register stage 6 before the LOW to HIGH clock transition;
Q7S = the data in register stage 7 before the HIGH to LOW clock transition.

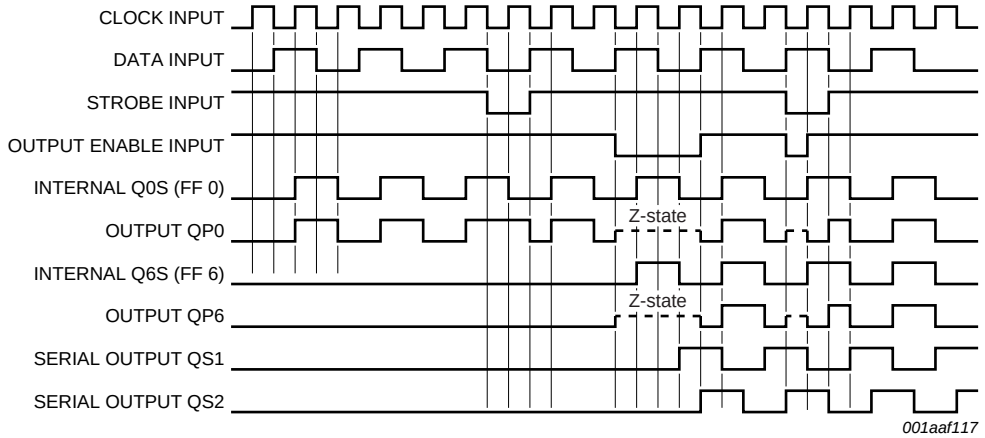

Fig 7. Timing diagram

All information provided in this document is subject to legal disclaimers.

© NXP B.V. 2012. All rights reserved.

8. Limiting values

Table 4. Limiting values

In accordance with the Absolute Maximum Rating System (IEC 60134). Voltages are referenced to GND (ground = 0 V).

Symbol	Parameter	Conditions		Min	Max	Unit
V_{CC}	supply voltage			–0.5	+7	V
I_{IK}	input clamping current	V_I < –0.5 V or V_I > V_{CC} + 0.5 V		-	±20	mA
I_{OK}	output clamping current	V_O < –0.5 V or V_O > V_{CC} + 0.5 V		-	±20	mA
I_O	output current	V_O = –0.5 V to (V_{CC} + 0.5 V)		-	±25	mA
I_{CC}	supply current			-	+50	mA
I_{GND}	ground current			-	–50	mA
T_{stg}	storage temperature			–65	+150	°C
P_{tot}	total power dissipation	DIP16 package	[1]	-	750	mW
		SO16, SSOP16 and TSSOP16 packages	[2]	-	500	mW

[1] For DIP16 package: P_{tot} derates linearly with 12 mW/K above 70 °C.

[2] For SO16: P_{tot} derates linearly with 8 mW/K above 70 °C.
For SSOP16 and TSSOP16 packages: P_{tot} derates linearly with 5.5 mW/K above 60 °C.

9. Recommended operating conditions

Table 5. Recommended operating conditions

Voltages are referenced to GND (ground = 0 V)

Symbol	Parameter	Conditions	74HC4094			74HCT4094			Unit
			Min	Typ	Max	Min	Typ	Max	
V_{CC}	supply voltage		2.0	5.0	6.0	4.5	5.0	5.5	V
V_I	input voltage		0	-	V_{CC}	0	-	V_{CC}	V
V_O	output voltage		0	-	V_{CC}	0	-	V_{CC}	V
T_{amb}	ambient temperature		–40	+25	+125	–40	+25	+125	°C
$\Delta t/\Delta V$	input transition rise and fall rate	V_{CC} = 2.0 V	-	-	625	-	-	-	ns/V
		V_{CC} = 4.5 V	-	1.67	139	-	1.67	139	ns/V
		V_{CC} = 6.0 V	-	-	83	-	-	-	ns/V

All information provided in this document is subject to legal disclaimers.

© NXP B.V. 2012. All rights reserved.

10. Static characteristics

Table 6. Static characteristics

At recommended operating conditions; voltages are referenced to GND (ground = 0 V).

Symbol	Parameter	Conditions	25 °C			–40 °C to +85 °C		–40 °C to +125 °C		Unit
			Min	Typ	Max	Min	Max	Min	Max	
74HC4094										
V_{IH}	HIGH-level input voltage	V_{CC} = 2.0 V	1.5	1.2	-	1.5	-	1.5	-	V
		V_{CC} = 4.5 V	3.15	2.4	-	3.15	-	3.15	-	V
		V_{CC} = 6.0 V	4.2	3.2	-	4.2	-	4.2	-	V
V_{IL}	LOW-level input voltage	V_{CC} = 2.0 V	-	0.8	0.5	-	0.5	-	0.5	V
		V_{CC} = 4.5 V	-	2.1	1.35	-	1.35	-	1.35	V
		V_{CC} = 6.0 V	-	2.8	1.8	-	1.8	-	1.8	V
V_{OH}	HIGH-level output voltage	$V_I = V_{IH}$ or V_{IL}								
		I_O = –20 μA; V_{CC} = 2.0 V	1.9	2.0	-	1.9	-	1.9	-	V
		I_O = –20 μA; V_{CC} = 4.5 V	4.4	4.5	-	4.4	-	4.4	-	V
		I_O = –20 μA; V_{CC} = 6.0 V	5.9	6.0	-	5.9	-	5.9	-	V
		I_O = –4.0 mA; V_{CC} = 4.5 V	3.98	4.32	-	3.84	-	3.7	-	V
		I_O = –5.2 mA; V_{CC} = 6.0 V	5.48	5.81	-	5.34	-	5.2	-	V
V_{OL}	LOW-level output voltage	$V_I = V_{IH}$ or V_{IL}								
		I_O = 20 μA; V_{CC} = 2.0 V	-	0	0.1	-	0.1	-	0.1	V
		I_O = 20 μA; V_{CC} = 4.5 V	-	0	0.1	-	0.1	-	0.1	V
		I_O = 20 μA; V_{CC} = 6.0 V	-	0	0.1	-	0.1	-	0.1	V
		I_O = 4.0 mA; V_{CC} = 4.5 V	-	0.15	0.26	-	0.33	-	0.4	V
		I_O = 5.2 mA; V_{CC} = 6.0 V	-	0.16	0.26	-	0.33	-	0.4	V
I_I	input leakage current	$V_I = V_{CC}$ or GND; V_{CC} = 6.0 V	-	-	±0.1	-	±1.0	-	±1.0	μA
I_{OZ}	OFF-state output current	$V_I = V_{IH}$ or V_{IL}; $V_O = V_{CC}$ or GND; V_{CC} = 6.0 V	-	-	±0.5	-	±5.0	-	±10.0	μA
I_{CC}	supply current	$V_I = V_{CC}$ or GND; I_O = 0 A; V_{CC} = 6.0 V	-	-	8.0	-	80	-	160	μA
C_I	input capacitance		-	3.5	-					pF
74HCT4094										
V_{IH}	HIGH-level input voltage	V_{CC} = 4.5 V to 5.5 V	2.0	1.6	-	2.0	-	2.0	-	V
V_{IL}	LOW-level input voltage	V_{CC} = 4.5 V to 5.5 V	-	1.2	0.8	-	0.8	-	0.8	V
V_{OH}	HIGH-level output voltage	$V_I = V_{IH}$ or V_{IL}; V_{CC} = 4.5 V								
		I_O = –20 μA	4.4	4.5	-	4.4	-	4.4	-	V
		I_O = –4.0 mA	3.98	4.32	-	3.84	-	3.7	-	V
V_{OL}	LOW-level output voltage	$V_I = V_{IH}$ or V_{IL}; V_{CC} = 4.5 V								
		I_O = 20 μA	-	0	0.1	-	0.1	-	0.1	V
		I_O = 4.0 mA	-	0.15	0.26	-	0.33	-	0.4	V

All information provided in this document is subject to legal disclaimers.

© NXP B.V. 2012. All rights reserved.

Table 6. Static characteristics *...continued*

At recommended operating conditions; voltages are referenced to GND (ground = 0 V).

Symbol	Parameter	Conditions	25 °C			–40 °C to +85 °C		–40 °C to +125 °C		Unit
			Min	Typ	Max	Min	Max	Min	Max	
I_I	input leakage current	$V_I = V_{CC}$ or GND; $V_{CC} = 5.5$ V	-	-	±0.1	-	±1.0	-	±1.0	μA
I_{OZ}	OFF-state output current	$V_I = V_{IH}$ or V_{IL}; $V_{CC} = 5.5$ V; $V_O = V_{CC}$ or GND per input pin; other inputs at V_{CC} or GND; $I_O = 0$ A	-	-	±0.5	-	±5.0	-	±10	μA
I_{CC}	supply current	$V_I = V_{CC}$ or GND; $I_O = 0$ A; $V_{CC} = 5.5$ V	-	-	8.0	-	80	-	160	μA
ΔI_{CC}	additional supply current	$V_I = V_{CC} - 2.1$ V; other inputs at V_{CC} or GND; $V_{CC} = 4.5$ V to 5.5 V; $I_O = 0$ A								
		per input pin; STR input	-	100	360	-	450	-	490	μA
		per input pin; OE input	-	150	540	-	675	-	735	μA
		per input pin; CP input	-	150	540	-	675	-	735	μA
		per input pin; D input	-	40	144	-	180	-	196	μA
C_I	input capacitance		-	3.5	-					pF

All information provided in this document is subject to legal disclaimers.

© NXP B.V. 2012. All rights reserved.

11. Dynamic characteristics

Table 7. Dynamic characteristics

Voltages are referenced to GND (ground = 0 V); C_L = 50 pF unless otherwise specified; for test circuit see Figure 12.

Symbol	Parameter	Conditions		25 °C			–40 °C to +85 °C		–40 °C to +125 °C		Unit
				Min	Typ	Max	Min	Max	Min	Max	
74HC4094											
t_{pd}	propagation delay	CP to QS1; see Figure 8	[1]								
		V_{CC} = 2.0 V		-	50	150	-	190	-	225	ns
		V_{CC} = 4.5 V		-	18	30	-	38	-	45	ns
		V_{CC} = 5 V; C_L = 15 pF		-	15	-	-	-	-	-	ns
		V_{CC} = 6.0 V		-	14	26	-	33	-	38	ns
		CP to QS2; see Figure 8	[1]								
		V_{CC} = 2.0 V		-	44	135	-	170	-	205	ns
		V_{CC} = 4.5 V		-	16	27	-	34	-	41	ns
		V_{CC} = 5 V; C_L = 15 pF		-	13	-	-	-	-	-	ns
		V_{CC} = 6.0 V		-	13	23	-	29	-	35	ns
		CP to QPn; see Figure 8	[1]								
		V_{CC} = 2.0 V		-	63	195	-	245	-	295	ns
		V_{CC} = 4.5 V		-	23	39	-	49	-	59	ns
		V_{CC} = 5 V; C_L = 15 pF		-	20	-	-	-	-	-	ns
		V_{CC} = 6.0 V		-	18	33	-	42	-	50	ns
		STR to QPn; see Figure 9	[1]								
		V_{CC} = 2.0 V		-	58	180	-	225	-	270	ns
		V_{CC} = 4.5 V		-	21	36	-	45	-	54	ns
		V_{CC} = 5 V; C_L = 15 pF		-	18	-	-	-	-	-	ns
		V_{CC} = 6.0 V		-	17	31	-	38	-	46	ns
t_{en}	enable time	OE to QPn; see Figure 11	[2]								
		V_{CC} = 2.0 V		-	55	175	-	220	-	265	ns
		V_{CC} = 4.5 V		-	20	35	-	44	-	53	ns
		V_{CC} = 6.0 V		-	16	30	-	37	-	45	ns
t_{dis}	disable time	OE to QPn; see Figure 11	[3]								
		V_{CC} = 2.0 V		-	41	125	-	155	-	190	ns
		V_{CC} = 4.5 V		-	15	25	-	31	-	38	ns
		V_{CC} = 6.0 V		-	12	21	-	26	-	32	ns
t_t	transition time	QPn and QSn; see Figure 8	[4]								
		V_{CC} = 2.0 V		-	19	75	-	95	-	110	ns
		V_{CC} = 4.5 V		-	7	15	-	19	-	22	ns
		V_{CC} = 6.0 V		-	6	13	-	16	-	19	ns

All information provided in this document is subject to legal disclaimers.

© NXP B.V. 2012. All rights reserved.

Table 7. Dynamic characteristics *...continued*

Voltages are referenced to GND (ground = 0 V); C_L = 50 pF unless otherwise specified; for test circuit see Figure 12.

Symbol	Parameter	Conditions		25 °C			–40 °C to +85 °C		–40 °C to +125 °C		Unit
				Min	Typ	Max	Min	Max	Min	Max	
t_W	pulse width	CP HIGH or LOW; see Figure 8									
		V_{CC} = 2.0 V		80	14	-	100	-	120	-	ns
		V_{CC} = 4.5 V		16	5	-	20	-	24	-	ns
		V_{CC} = 6.0 V		14	4	-	17	-	20	-	ns
		STR HIGH; see Figure 9									
		V_{CC} = 2.0 V		80	14	-	100	-	120	-	ns
		V_{CC} = 4.5 V		16	5	-	20	-	24	-	ns
		V_{CC} = 6.0 V		14	4	-	17	-	20	-	ns
t_{su}	set-up time	D to CP; see Figure 10									
		V_{CC} = 2.0 V		50	14	-	65	-	75	-	ns
		V_{CC} = 4.5 V		10	5	-	13	-	15	-	ns
		V_{CC} = 6.0 V		9	4	-	11	-	13	-	ns
		CP to STR; see Figure 9									
		V_{CC} = 2.0 V		100	28	-	125	-	150	-	ns
		V_{CC} = 4.5 V		20	10	-	25	-	30	-	ns
		V_{CC} = 6.0 V		17	8	-	21	-	26	-	ns
t_h	hold time	D to CP; see Figure 10									
		V_{CC} = 2.0 V		3	-6	-	3	-	3	-	ns
		V_{CC} = 4.5 V		3	-2	-	3	-	3	-	ns
		V_{CC} = 6.0 V		3	-2	-	3	-	3	-	ns
		CP to STR; see Figure 9									
		V_{CC} = 2.0 V		0	-14	-	0	-	0	-	ns
		V_{CC} = 4.5 V		0	-5	-	0	-	0	-	ns
		V_{CC} = 6.0 V		0	-4	-	0	-	0	-	ns
f_{max}	maximum frequency	CP; see Figure 8									
		V_{CC} = 2.0 V		6.0	28	-	4.8	-	4.0	-	MHz
		V_{CC} = 4.5 V		30	87	-	24	-	20	-	MHz
		V_{CC} = 5 V; C_L = 15 pF		-	95	-	-	-	-	-	MHz
		V_{CC} = 6.0 V		35	103	-	28	-	24	-	MHz
C_{PD}	power dissipation capacitance	C_L = 50 pF; f = 1 MHz; V_I = GND to V_{CC}	[5]	-	83	-	-	-	-	-	pF

All information provided in this document is subject to legal disclaimers.

© NXP B.V. 2012. All rights reserved.

Table 7. Dynamic characteristics *...continued*

Voltages are referenced to GND (ground = 0 V); C_L = 50 pF unless otherwise specified; for test circuit see Figure 12.

Symbol	Parameter	Conditions		25 °C			–40 °C to +85 °C		–40 °C to +125 °C		Unit
				Min	Typ	Max	Min	Max	Min	Max	
74HCT4094											
t_{pd}	propagation delay	CP to QS1; see Figure 8	[1]								
		V_{CC} = 4.5 V		-	23	39	-	49	-	59	ns
		V_{CC} = 5 V; C_L = 15 pF		-	19	-	-	-	-	-	ns
		CP to QS2; see Figure 8	[1]								
		V_{CC} = 4.5 V		-	21	36	-	45	-	54	ns
		V_{CC} = 5 V; C_L = 15 pF		-	18	-	-	-	-	-	ns
		CP to QPn; see Figure 8	[1]								
		V_{CC} = 4.5 V		-	25	43	-	54	-	65	ns
		V_{CC} = 5 V; C_L = 15 pF		-	21	-	-	-	-	-	ns
		STR to QPn; see Figure 9	[1]								
		V_{CC} = 4.5 V		-	22	39	-	49	-	59	ns
		V_{CC} = 5 V; C_L = 15 pF		-	19	-	-	-	-	-	ns
t_{en}	enable time	OE to QPn; see Figure 11	[2]								
		V_{CC} = 4.5 V		-	20	35	-	44	-	53	ns
t_{dis}	disable time	OE to QPn; see Figure 11	[3]								
		V_{CC} = 4.5 V		-	21	35	-	44	-	53	ns
t_t	transition time	QPn and QSn; see Figure 8	[4]								
		V_{CC} = 4.5 V		-	7	15	-	19	-	22	ns
t_W	pulse width	CP HIGH or LOW; see Figure 8									
		V_{CC} = 4.5 V		16	7	-	20	-	24	-	ns
		STR HIGH; see Figure 9									
		V_{CC} = 4.5 V		16	5	-	20	-	24	-	ns
t_{su}	set-up time	Dn to CP; see Figure 10									
		V_{CC} = 4.5 V		10	4	-	13	-	15	-	ns
		CP to STR; see Figure 9									
		V_{CC} = 4.5 V		20	9	-	25	-	30	-	ns
t_h	hold time	Dn to CP; see Figure 10									
		V_{CC} = 4.5 V		4	0	-	4	-	4	-	ns
		CP to STR; see Figure 9									
		V_{CC} = 4.5 V		0	–4	-	0	-	0	-	ns
f_{max}	maximum frequency	CP; see Figure 8									
		V_{CC} = 4.5 V		30	80	-	24	-	20	-	MHz
		V_{CC} = 5 V; C_L = 15 pF		-	86	-	-	-	-	-	MHz
C_{PD}	power dissipation capacitance	C_L = 50 pF; f = 1 MHz; V_I = GND to V_{CC}	[5]	-	92	-	-	-	-	-	pF

[1] t_{pd} is the same as t_{PLH} and t_{PHL}.

All information provided in this document is subject to legal disclaimers.

© NXP B.V. 2012. All rights reserved.

[2] t_{en} is the same as t_{PZH} and t_{PZL}.

[3] t_{dis} is the same as t_{PLZ} and t_{PHZ}.

[4] t_t is the same as t_{THL} and t_{TLH}.

[5] C_{PD} is used to determine the dynamic power dissipation (P_D in μW).
$P_D = C_{PD} \times V_{CC}^2 \times f_i \times N + \Sigma(C_L \times V_{CC}^2 \times f_o)$ where:
f_i = input frequency in MHz;
f_o = output frequency in MHz;
C_L = output load capacitance in pF;
V_{CC} = supply voltage in V;
N = number of inputs switching;
$\Sigma(C_L \times V_{CC}^2 \times f_o)$ = sum of outputs.

12. Waveforms

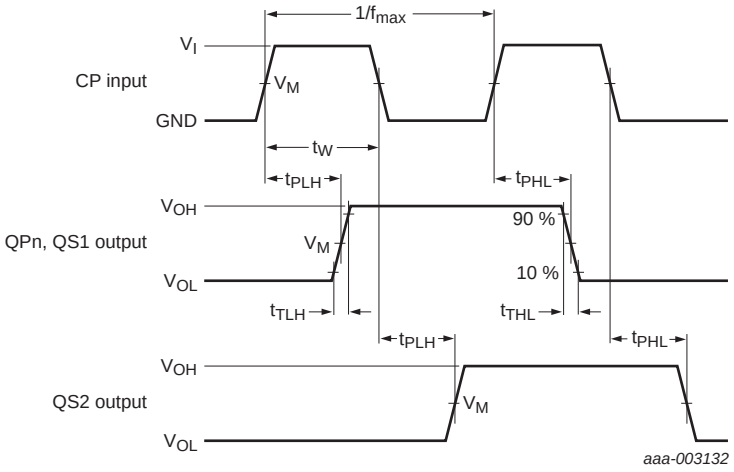

Measurement points are given in Table 8.

V_{OL} and V_{OH} are typical voltage output levels that occur with the output load.

Fig 8. Propagation delay input (CP) to output (QPn, QS1, QS2), output transition time, clock input (CP) pulse width and the maximum frequency (CP)

All information provided in this document is subject to legal disclaimers.

© NXP B.V. 2012. All rights reserved.

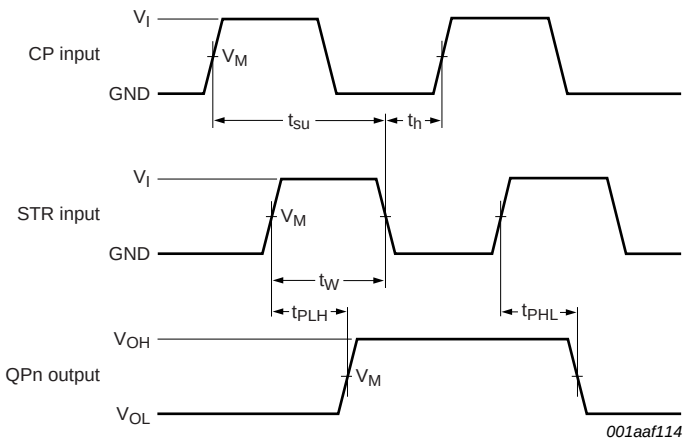

Measurement points are given in Table 8.

V_{OL} and V_{OH} are typical voltage output levels that occur with the output load.

Fig 9. Propagation delay strobe input (STR) to output (QPn), strobe input (STR) pulse width and the clock set-up and hold times for strobe input

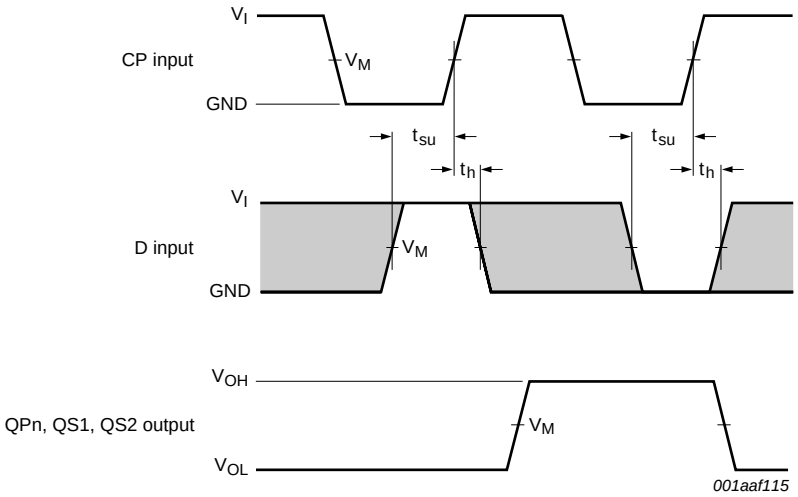

Measurement points are given in Table 8.

V_{OL} and V_{OH} are typical voltage output levels that occur with the output load.

Fig 10. The data input (D) to clock input (CP) set-up times and clock input (CP) to data input (D) hold times

All information provided in this document is subject to legal disclaimers.

© NXP B.V. 2012. All rights reserved.

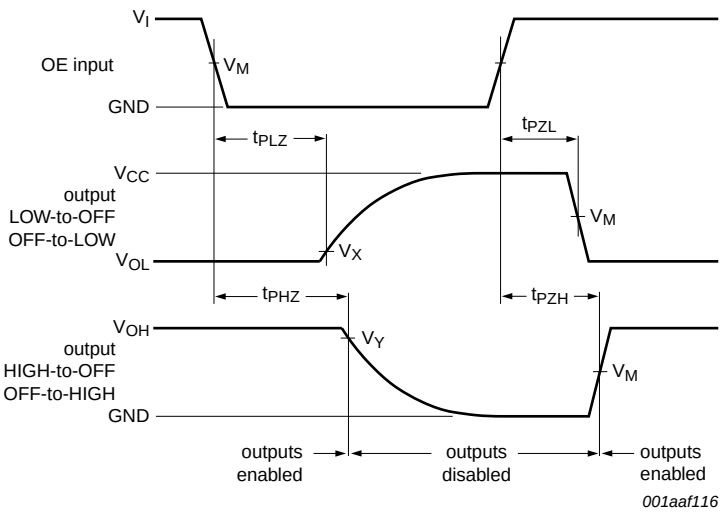

Measurement points are given in Table 8.

V_{OL} and V_{OH} are typical voltage output levels that occur with the output load.

Fig 11. Enable and disable times

Table 8. Measurement points

Type	Input	Output		
	V_M	V_M	V_X	V_Y
74HC4094	$0.5V_{CC}$	$0.5V_{CC}$	$0.1V_{OH}$	$0.9V_{OH}$
74HCT4094	1.3 V	1.3 V	$0.1V_{OH}$	$0.9V_{OH}$

All information provided in this document is subject to legal disclaimers.

© NXP B.V. 2012. All rights reserved.

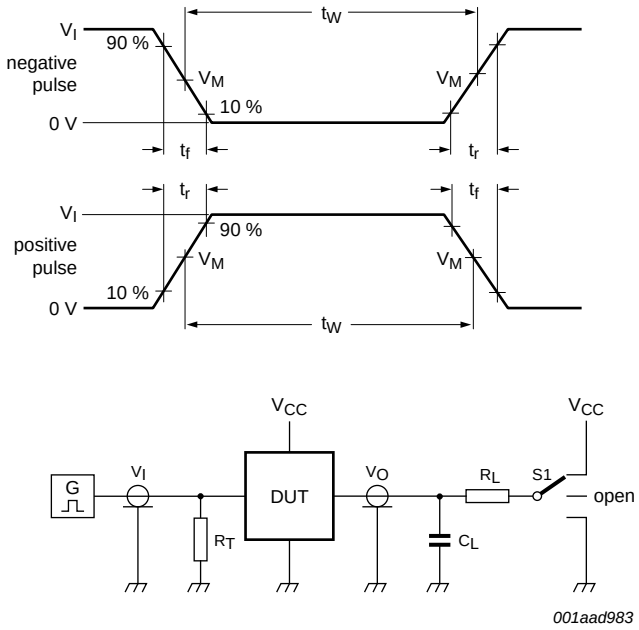

Test data is given in Table 9.

Definitions test circuit:

R_T = Termination resistance should be equal to output impedance Z_o of the pulse generator.

C_L = Load capacitance including jig and probe capacitance.

R_L = Load resistance.

S1 = Test selection switch.

Fig 12. Test circuit for measuring switching times

Table 9. Test data

Type	Input		Load		S1 position		
	V_I	t_r, t_f	C_L	R_L	t_{PHL}, t_{PLH}	t_{PZH}, t_{PHZ}	t_{PZL}, t_{PLZ}
74HC4094	V_{CC}	6 ns	15 pF, 50 pF	1 kΩ	open	GND	V_{CC}
74HCT4094	3 V	6 ns	15 pF, 50 pF	1 kΩ	open	GND	V_{CC}

All information provided in this document is subject to legal disclaimers.

© NXP B.V. 2012. All rights reserved.

13. Package outline

DIP16: plastic dual in-line package; 16 leads (300 mil) **SOT38-4**

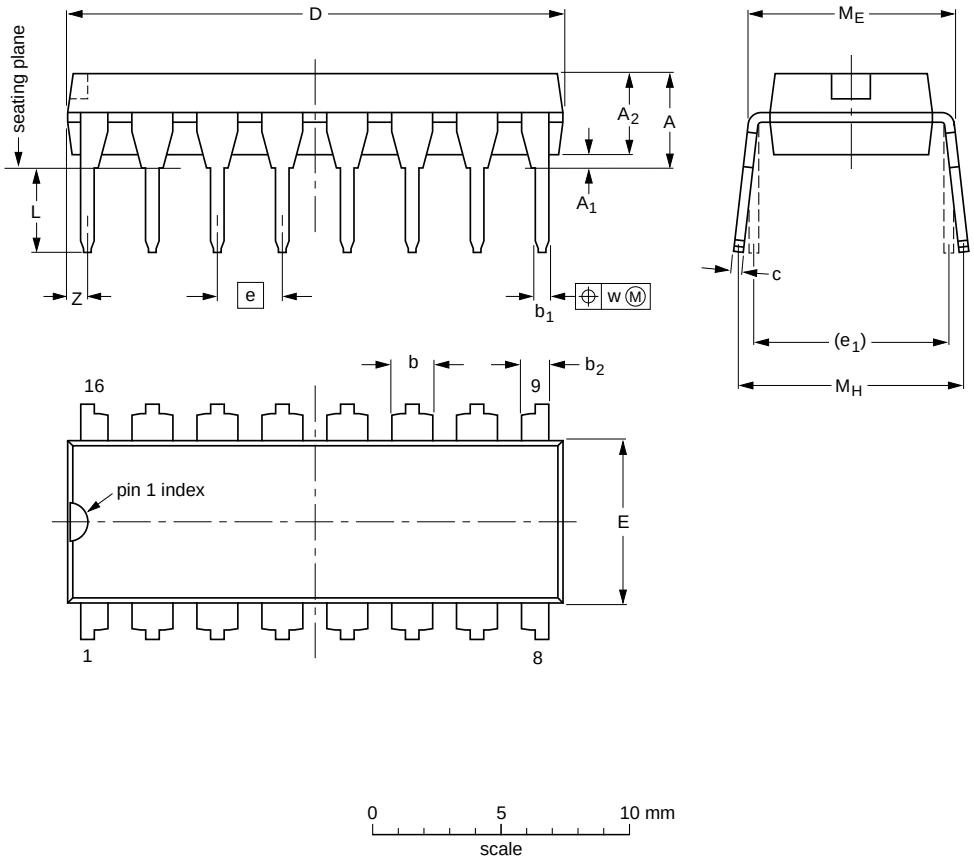

DIMENSIONS (inch dimensions are derived from the original mm dimensions)

UNIT	A max.	A_1 min.	A_2 max.	b	b_1	b_2	c	D (1)	E (1)	e	e_1	L	M_E	M_H	w	Z (1) max.
mm	4.2	0.51	3.2	1.73 1.30	0.53 0.38	1.25 0.85	0.36 0.23	19.50 18.55	6.48 6.20	2.54	7.62	3.60 3.05	8.25 7.80	10.0 8.3	0.254	0.76
inches	0.17	0.02	0.13	0.068 0.051	0.021 0.015	0.049 0.033	0.014 0.009	0.77 0.73	0.26 0.24	0.1	0.3	0.14 0.12	0.32 0.31	0.39 0.33	0.01	0.03

Note

1. Plastic or metal protrusions of 0.25 mm (0.01 inch) maximum per side are not included.

OUTLINE VERSION	REFERENCES				EUROPEAN PROJECTION	ISSUE DATE
	IEC	JEDEC	JEITA			
SOT38-4						~~95-01-14~~ 03-02-13

Fig 13. Package outline SOT38-4 (DIP16)

All information provided in this document is subject to legal disclaimers.

© NXP B.V. 2012. All rights reserved.

SO16: plastic small outline package; 16 leads; body width 3.9 mm **SOT109-1**

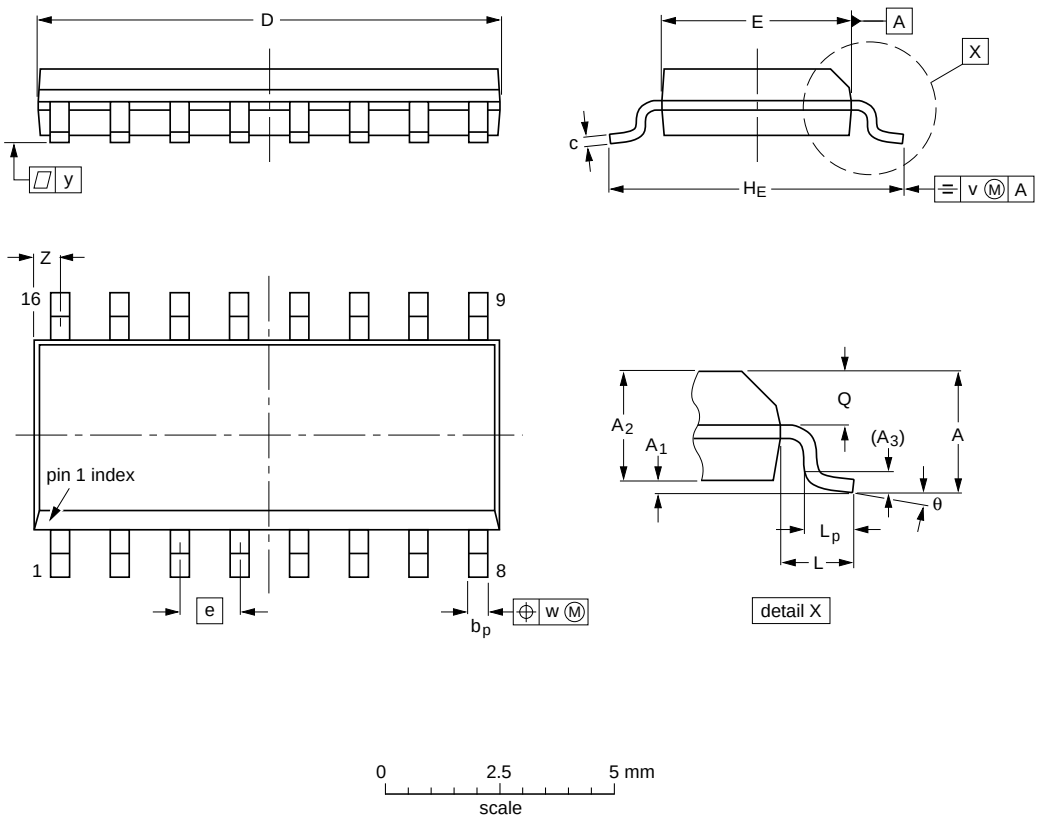

DIMENSIONS (inch dimensions are derived from the original mm dimensions)

UNIT	A max.	A_1	A_2	A_3	b_p	c	D(1)	E(1)	e	H_E	L	L_p	Q	v	w	y	Z(1)	θ
mm	1.75	0.25 0.10	1.45 1.25	0.25	0.49 0.36	0.25 0.19	10.0 9.8	4.0 3.8	1.27	6.2 5.8	1.05	1.0 0.4	0.7 0.6	0.25	0.25	0.1	0.7 0.3	8° 0°
inches	0.069	0.010 0.004	0.057 0.049	0.01	0.019 0.014	0.0100 0.0075	0.39 0.38	0.16 0.15	0.05	0.244 0.228	0.041	0.039 0.016	0.028 0.020	0.01	0.01	0.004	0.028 0.012	

Note

1. Plastic or metal protrusions of 0.15 mm (0.006 inch) maximum per side are not included.

OUTLINE VERSION	REFERENCES				EUROPEAN PROJECTION	ISSUE DATE
	IEC	JEDEC	JEITA			
SOT109-1	076E07	MS-012				~~99-12-27~~ 03-02-19

Fig 14. Package outline SOT109-1 (SO16)

All information provided in this document is subject to legal disclaimers.

© NXP B.V. 2012. All rights reserved.

SSOP16: plastic shrink small outline package; 16 leads; body width 5.3 mm **SOT338-1**

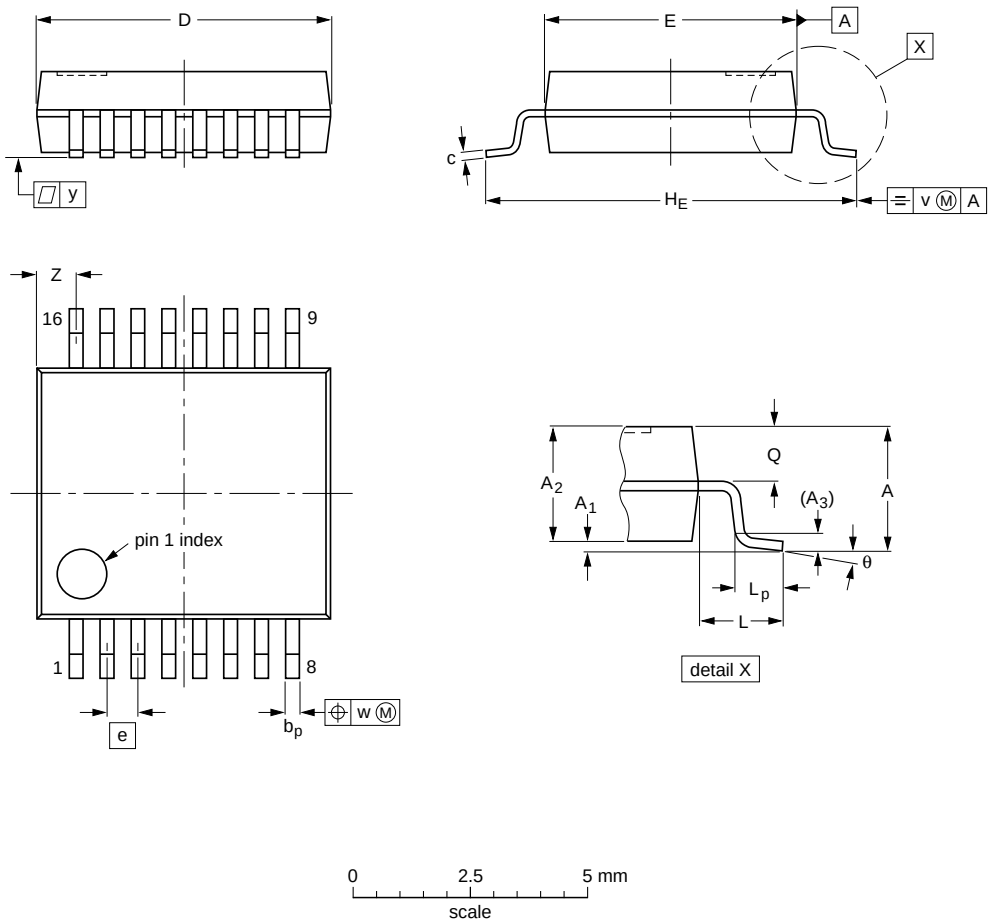

DIMENSIONS (mm are the original dimensions)

UNIT	A max.	A_1	A_2	A_3	b_p	c	D (1)	E (1)	e	H_E	L	L_p	Q	v	w	y	Z (1)	θ
mm	2	0.21 0.05	1.80 1.65	0.25	0.38 0.25	0.20 0.09	6.4 6.0	5.4 5.2	0.65	7.9 7.6	1.25	1.03 0.63	0.9 0.7	0.2	0.13	0.1	1.00 0.55	8° 0°

Note

1. Plastic or metal protrusions of 0.25 mm maximum per side are not included.

OUTLINE VERSION	REFERENCES				EUROPEAN PROJECTION	ISSUE DATE
	IEC	JEDEC	JEITA			
SOT338-1		MO-150				~~99-12-27~~ 03-02-19

Fig 15. Package outline SOT338-1 (SSOP16)

All information provided in this document is subject to legal disclaimers.

© NXP B.V. 2012. All rights reserved.

TSSOP16: plastic thin shrink small outline package; 16 leads; body width 4.4 mm **SOT403-1**

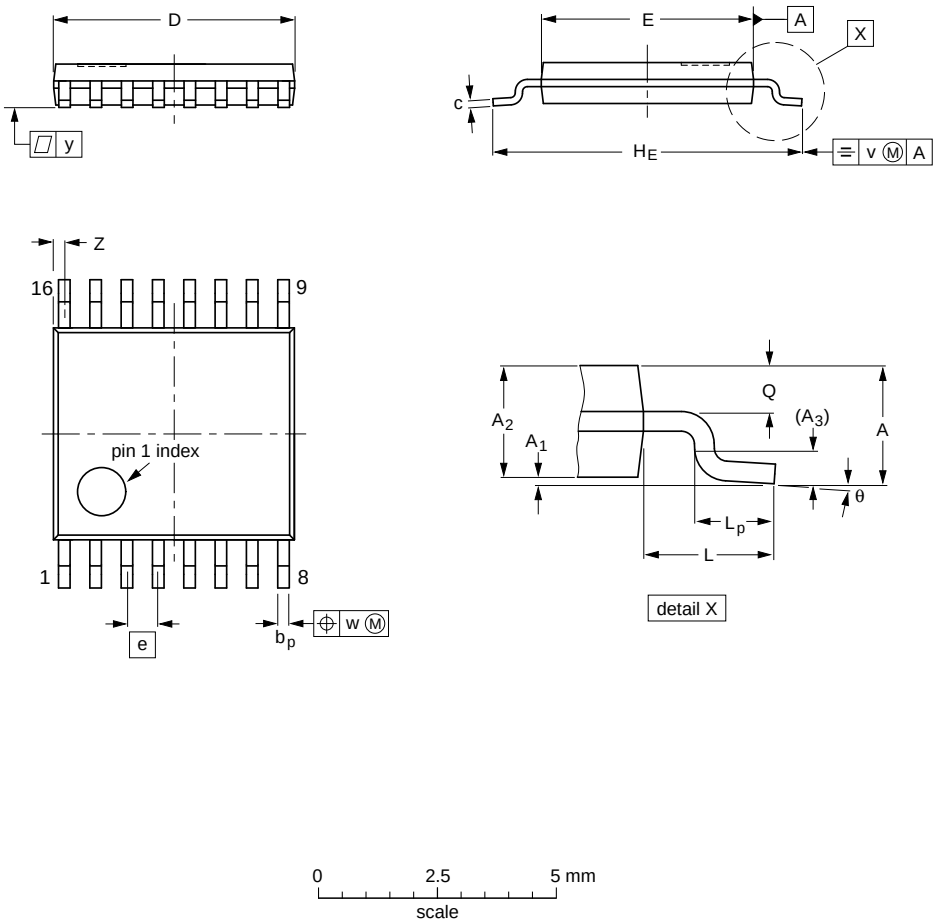

DIMENSIONS (mm are the original dimensions)

UNIT	A max.	A_1	A_2	A_3	b_p	c	D (1)	E (2)	e	H_E	L	L_p	Q	v	w	y	Z (1)	θ
mm	1.1	0.15 0.05	0.95 0.80	0.25	0.30 0.19	0.2 0.1	5.1 4.9	4.5 4.3	0.65	6.6 6.2	1	0.75 0.50	0.4 0.3	0.2	0.13	0.1	0.40 0.06	8° 0°

Notes

1. Plastic or metal protrusions of 0.15 mm maximum per side are not included.
2. Plastic interlead protrusions of 0.25 mm maximum per side are not included.

OUTLINE VERSION	REFERENCES				EUROPEAN PROJECTION	ISSUE DATE
	IEC	JEDEC	JEITA			
SOT403-1		MO-153				~~99-12-27~~ 03-02-18

Fig 16. Package outline SOT403-1 (TSSOP16)

All information provided in this document is subject to legal disclaimers.

© NXP B.V. 2012. All rights reserved.

14. Abbreviations

Table 10. Abbreviations

Acronym	Description
CMOS	Complementary Metal Oxide Semiconductor
ESD	ElectroStatic Discharge
HBM	Human Body Model
MM	Machine Model

15. Revision history

Table 11. Revision history

Document ID	Release date	Data sheet status	Change notice	Supersedes
74HC_HCT4094 v.6	20121231	Product data sheet	-	74HC_HCT4094 v.5
Modifications:	• General description updated.			
74HC_HCT4094 v.5	20120628	Product data sheet	-	74HC_HCT4094 v.4
Modifications:	• V_X and V_Y measurement points added to Table 8.			
74HC_HCT4094 v.4	20111219	Product data sheet	-	74HC_HCT4094 v.3
Modifications:	• Legal pages updated.			
74HC_HCT4094 v.3	20110214	Product data sheet	-	74HC_HCT4094_CNV v.2
74HC_HCT4094_CNV v.2	19970901	Product specification	-	-

All information provided in this document is subject to legal disclaimers.

© NXP B.V. 2012. All rights reserved.

16. Legal information

16.1 Data sheet status

Document status[1][2]	Product status[3]	Definition
Objective [short] data sheet	Development	This document contains data from the objective specification for product development.
Preliminary [short] data sheet	Qualification	This document contains data from the preliminary specification.
Product [short] data sheet	Production	This document contains the product specification.

[1] Please consult the most recently issued document before initiating or completing a design.

[2] The term 'short data sheet' is explained in section "Definitions".

[3] The product status of device(s) described in this document may have changed since this document was published and may differ in case of multiple devices. The latest product status information is available on the Internet at URL http://www.nxp.com.

16.2 Definitions

Draft — The document is a draft version only. The content is still under internal review and subject to formal approval, which may result in modifications or additions. NXP Semiconductors does not give any representations or warranties as to the accuracy or completeness of information included herein and shall have no liability for the consequences of use of such information.

Short data sheet — A short data sheet is an extract from a full data sheet with the same product type number(s) and title. A short data sheet is intended for quick reference only and should not be relied upon to contain detailed and full information. For detailed and full information see the relevant full data sheet, which is available on request via the local NXP Semiconductors sales office. In case of any inconsistency or conflict with the short data sheet, the full data sheet shall prevail.

Product specification — The information and data provided in a Product data sheet shall define the specification of the product as agreed between NXP Semiconductors and its customer, unless NXP Semiconductors and customer have explicitly agreed otherwise in writing. In no event however, shall an agreement be valid in which the NXP Semiconductors product is deemed to offer functions and qualities beyond those described in the Product data sheet.

16.3 Disclaimers

Limited warranty and liability — Information in this document is believed to be accurate and reliable. However, NXP Semiconductors does not give any representations or warranties, expressed or implied, as to the accuracy or completeness of such information and shall have no liability for the consequences of use of such information. NXP Semiconductors takes no responsibility for the content in this document if provided by an information source outside of NXP Semiconductors.

In no event shall NXP Semiconductors be liable for any indirect, incidental, punitive, special or consequential damages (including - without limitation - lost profits, lost savings, business interruption, costs related to the removal or replacement of any products or rework charges) whether or not such damages are based on tort (including negligence), warranty, breach of contract or any other legal theory.

Notwithstanding any damages that customer might incur for any reason whatsoever, NXP Semiconductors' aggregate and cumulative liability towards customer for the products described herein shall be limited in accordance with the *Terms and conditions of commercial sale* of NXP Semiconductors.

Right to make changes — NXP Semiconductors reserves the right to make changes to information published in this document, including without limitation specifications and product descriptions, at any time and without notice. This document supersedes and replaces all information supplied prior to the publication hereof.

Suitability for use — NXP Semiconductors products are not designed, authorized or warranted to be suitable for use in life support, life-critical or safety-critical systems or equipment, nor in applications where failure or malfunction of an NXP Semiconductors product can reasonably be expected to result in personal injury, death or severe property or environmental damage. NXP Semiconductors and its suppliers accept no liability for inclusion and/or use of NXP Semiconductors products in such equipment or applications and therefore such inclusion and/or use is at the customer's own risk.

Applications — Applications that are described herein for any of these products are for illustrative purposes only. NXP Semiconductors makes no representation or warranty that such applications will be suitable for the specified use without further testing or modification.

Customers are responsible for the design and operation of their applications and products using NXP Semiconductors products, and NXP Semiconductors accepts no liability for any assistance with applications or customer product design. It is customer's sole responsibility to determine whether the NXP Semiconductors product is suitable and fit for the customer's applications and products planned, as well as for the planned application and use of customer's third party customer(s). Customers should provide appropriate design and operating safeguards to minimize the risks associated with their applications and products.

NXP Semiconductors does not accept any liability related to any default, damage, costs or problem which is based on any weakness or default in the customer's applications or products, or the application or use by customer's third party customer(s). Customer is responsible for doing all necessary testing for the customer's applications and products using NXP Semiconductors products in order to avoid a default of the applications and the products or of the application or use by customer's third party customer(s). NXP does not accept any liability in this respect.

Limiting values — Stress above one or more limiting values (as defined in the Absolute Maximum Ratings System of IEC 60134) will cause permanent damage to the device. Limiting values are stress ratings only and (proper) operation of the device at these or any other conditions above those given in the Recommended operating conditions section (if present) or the Characteristics sections of this document is not warranted. Constant or repeated exposure to limiting values will permanently and irreversibly affect the quality and reliability of the device.

Terms and conditions of commercial sale — NXP Semiconductors products are sold subject to the general terms and conditions of commercial sale, as published at http://www.nxp.com/profile/terms, unless otherwise agreed in a valid written individual agreement. In case an individual agreement is concluded only the terms and conditions of the respective agreement shall apply. NXP Semiconductors hereby expressly objects to applying the customer's general terms and conditions with regard to the purchase of NXP Semiconductors products by customer.

No offer to sell or license — Nothing in this document may be interpreted or construed as an offer to sell products that is open for acceptance or the grant, conveyance or implication of any license under any copyrights, patents or other industrial or intellectual property rights.

All information provided in this document is subject to legal disclaimers.

© NXP B.V. 2012. All rights reserved.

Export control — This document as well as the item(s) described herein may be subject to export control regulations. Export might require a prior authorization from competent authorities.

Non-automotive qualified products — Unless this data sheet expressly states that this specific NXP Semiconductors product is automotive qualified, the product is not suitable for automotive use. It is neither qualified nor tested in accordance with automotive testing or application requirements. NXP Semiconductors accepts no liability for inclusion and/or use of non-automotive qualified products in automotive equipment or applications.

In the event that customer uses the product for design-in and use in automotive applications to automotive specifications and standards, customer (a) shall use the product without NXP Semiconductors' warranty of the product for such automotive applications, use and specifications, and (b) whenever customer uses the product for automotive applications beyond NXP Semiconductors' specifications such use shall be solely at customer's own risk, and (c) customer fully indemnifies NXP Semiconductors for any liability, damages or failed product claims resulting from customer design and use of the product for automotive applications beyond NXP Semiconductors' standard warranty and NXP Semiconductors' product specifications.

Translations — A non-English (translated) version of a document is for reference only. The English version shall prevail in case of any discrepancy between the translated and English versions.

16.4 Trademarks

Notice: All referenced brands, product names, service names and trademarks are the property of their respective owners.

17. Contact information

For more information, please visit: **http://www.nxp.com**

For sales office addresses, please send an email to: **salesaddresses@nxp.com**

All information provided in this document is subject to legal disclaimers.

© NXP B.V. 2012. All rights reserved.

18. Contents

1 General description 1
2 Features and benefits 1
3 Applications 1
4 Ordering information 2
5 Functional diagram 2
6 Pinning information 4
6.1 Pinning 4
6.2 Pin description 4
7 Functional description 5
8 Limiting values 6
9 Recommended operating conditions 6
10 Static characteristics 7
11 Dynamic characteristics 9
12 Waveforms 12
13 Package outline 16
14 Abbreviations 20
15 Revision history 20
16 Legal information 21
16.1 Data sheet status 21
16.2 Definitions 21
16.3 Disclaimers 21
16.4 Trademarks 22
17 Contact information 22
18 Contents 23

Please be aware that important notices concerning this document and the product(s) described herein, have been included in section 'Legal information'.

© NXP B.V. 2012. All rights reserved.

For more information, please visit: http://www.nxp.com
For sales office addresses, please send an email to: salesaddresses@nxp.com

Date of release: 31 December 2012
Document identifier: 74HC_HCT4094