Suction plate (top)

VCSP-O 125x75x16.5

Part no.:10.01.12.00011

https://www.schmalz.com/10.01.12.00011

Homepage > Vacuum Clamping Technology > Clamping Equipment for Woodworking > Replacement Suction Plates > Upper Suction Plates > VCSP-O 125x75x16.5

Suction-Plate for vacuum block, (top)

Dimensions (LxW): 125 x 75 mm

Height H: 16.5 mm

Design Data

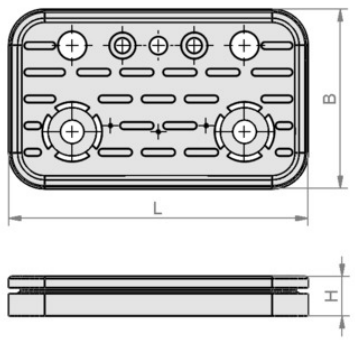

Attribute	Value
B	75 mm
H	16.5 mm
L	125 mm

Technical Data

Attribute	Value
Weight	0.075 kg

sales@prom-elec.com / ООО ПРОМЭЛЕКТРОНИКА