MINIATURE CERAMIC SMD CRYSTAL

5.0 X 3.2 X 1.3mm

ABM3

Pb in Glass, exemption 7C-I per RoHS II Directive 2011/65/EU Annex | **RoHS/RoHS II Compliant.**

Smaller package alternative for ABM7 series

Moisture Sensitivity Level (MSL) – This product is Hermetically Sealed and not Moisture Sensitive - MSL = N/A: Not Applicable

FEATURES:

- AT-cut fundamental or 3rd OT mode
- Suitable for RoHS reflow profile
- Tight Stability available ±10
- Ceramic package hermetically glass sealed assures high precision and reliability.

APPLICATIONS:

- Cellular telephones, pagers
- Communication and test equipment
- PCMCIA and wireless applications

STANDARD SPECIFICATIONS:

Parameters	Minimum	Typical	Maximum	Units	Notes
Frequency Range	8.000		54.000	MHz	Fundamental
	54.100		80.000		3rd Overtone
Operation Mode	Fundamental or 3rd Overtone				
Operating Temperature	-10		+60	ºC	See options
Storage Temperature	-40		+90	ºC	
Frequency Tolerance @+25℃	-50		+50	ppm	See options
Frequency Stability over the Operating Temperature (ref. to +25℃)	-50		+50	ppm	See options
Equivalent series resistance (R1)			140	Ω	8.000 ≤ F < 9.000 (Fund)
			120		9.000 ≤ F < 10.000 (Fund)
			60		10.000 ≤ F < 16.000 (Fund)
			40		16.000 ≤ F < 20.000 (Fund)
			30		20.000 ≤ F < 30.000 (Fund)
			25		30.000 ≤ F ≤ 54.000 (Fund)
			60		54.000 < F ≤ 80.000 (3rd OT)
Shunt capacitance (C0)			7	pF	
Load capacitance (CL)	18			pF	Standard (See options if other than STD)
Drive Level		10	100	µW	
Aging	-5		+5	ppm	@25℃±3℃ First year
Insulation Resistance	500			MΩ	@ 100Vdc ± 15V

30332 Esperanza, Rancho Santa Margarita, California 92688
tel 949-546-8000 | fax 949-546-8001 | www.abracon.com

sales@prom-elec.com / ООО ПРОМЭЛЕКТРОНИКА

MINIATURE CERAMIC SMD CRYSTAL

ABM3

Pb in Glass, exemption 7C-I per RoHS II Directive 2011/65/EU Annex | **RoHS/RoHS II Compliant.**

5.0 X 3.2 X 1.3mm

OPTIONS AND PART IDENTIFICATION: (Left blank if standard)

ABM3 - [ ] MHz - [ ] - [ ] - [ ][ ][ ] - [ ]

Frequency in MHz
Please specify the frequency in MHz.
e.g. 14.31818MHz

Load Capacitance (pF)
Please specify CL in pF or S for series

Custom ESR if other than standard
R□
□: Specify a value in Ω (e.g.: R40)

Operating Temp. (See Table 1 for details)
- E: 0°C ~ +70°C
- B: -20°C ~ +70°C
- C: -30°C ~ +70°C
- N: -30°C ~ +85°C
- D: -40°C ~ +85°C
- J: -40°C ~ +105°C
- K: -40°C ~ +125°C

Freq. Tolerance
- 7: ± 15 ppm
- 2: ± 20 ppm
- 3: ± 25 ppm
- 4: ± 30 ppm

Freq. Stability (See Table 1 for details)
- U: ± 10 ppm
- G: ± 15 ppm
- X: ± 20 ppm
- W: ± 25 ppm
- Y: ± 30 ppm
- H: ± 35 ppm
- Q: ± 100 ppm

Packaging
- Blank: Bulk
- T: Tape & Reel

Table 1 Available Combinations of Operating Temp. and Freq. Stability

Operating Temp.	Freq. Stability							
	U:±10ppm	G:±15ppm	X:±20ppm	W:±25ppm	Y:±30ppm	H:±35ppm	Std:±50ppm	Q:±100ppm
Std: -10°C ~ +60°C	√	√	√	√	√	√	√	√
E: 0°C ~ +70°C	√	√	√	√	√	√	√	√
B: -20°C ~ +70°C	√	√	√	√	√	√	√	√
C: -30°C ~ +70°C		√	√	√	√	√	√	√
N: -30°C ~ +85°C		√	√	√	√	√	√	√
D: -40°C ~ +85°C			√	√	√	√	√	√
J: -40°C ~ +105°C							√	√
K: -40°C ~ +125°C							√	√

30332 Esperanza, Rancho Santa Margarita, California 92688
tel 949-546-8000 | fax 949-546-8001 | www.abracon.com

MINIATURE CERAMIC SMD CRYSTAL

ABM3

Pb in Glass, exemption 7C-I per RoHS II Directive 2011/65/EU Annex | **RoHS/RoHS II Compliant.**

5.0 X 3.2 X 1.3mm

OUTLINE DRAWING:

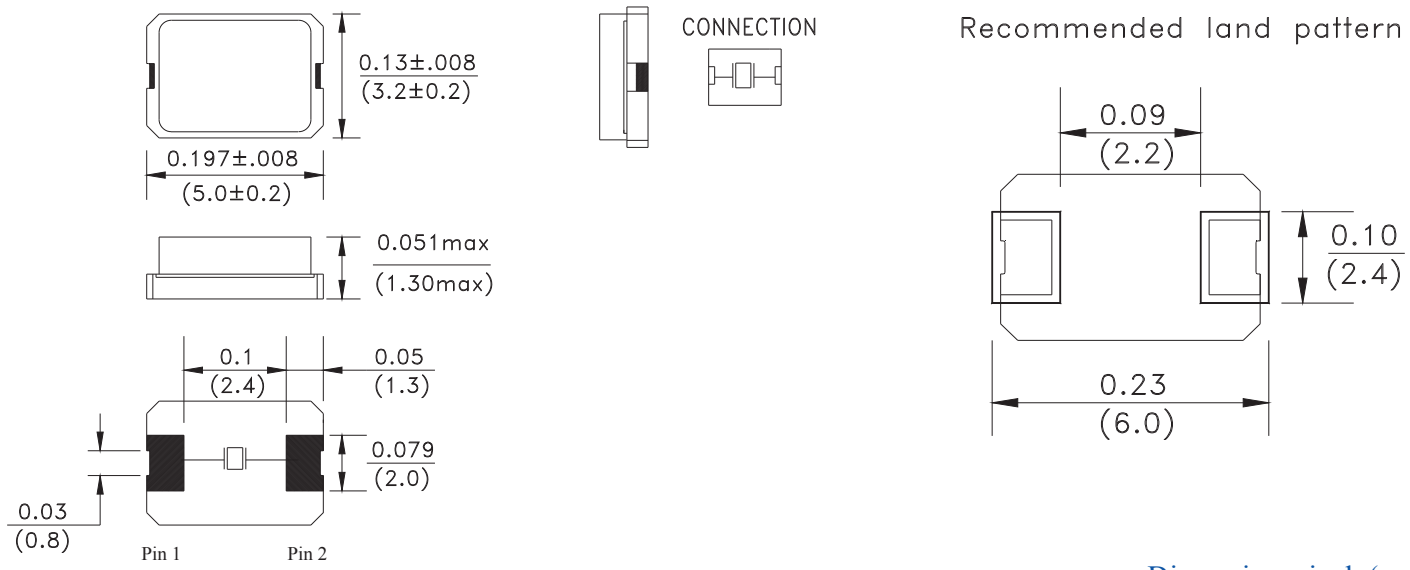

Dimensions: inch (mm)

TAPE & REEL:

Tape and reel (1,000pcs/reel)

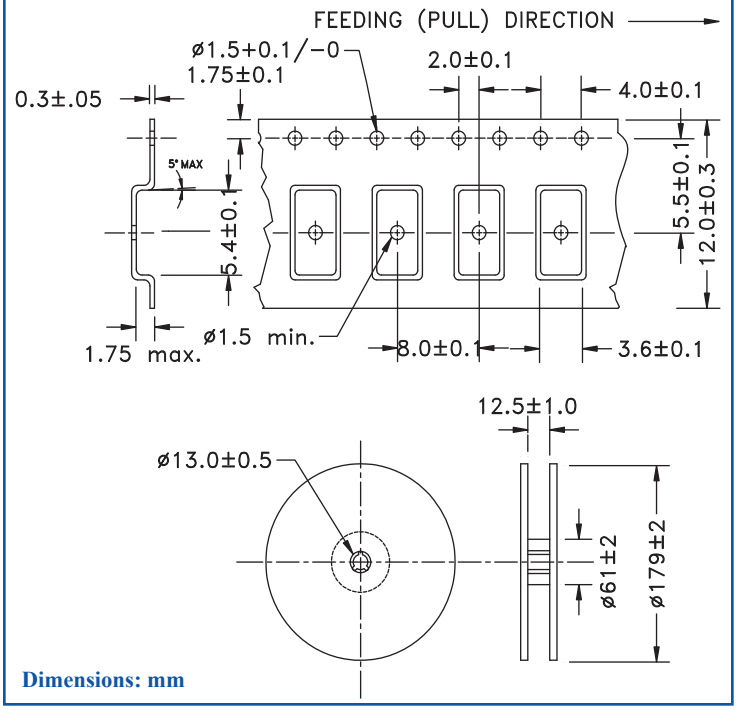

Dimensions: mm

REFLOW PROFILE

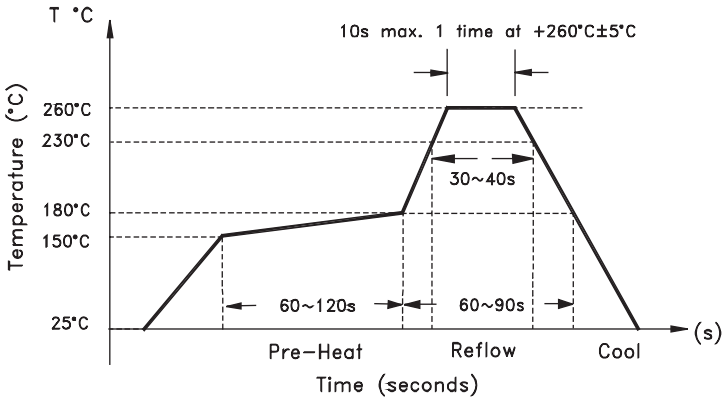

Need a test socket for the ABM3 Series? To view compatible **PRECISION TEST & BURN-IN SOCKETS** for these parts, **click here. P/N: AXS-5032-02-06**

ATTENTION: Abracon Corporation's products are COTS – Commercial-Off-The-Shelf products; suitable for Commercial, Industrial and, where designated, Automotive Applications. Abracon's products are not specifically designed for Military, Aviation, Aerospace, Life-dependant Medical applications or any application requiring high reliability where component failure could result in loss of life and/or property. For applications requiring high reliability and/or presenting an extreme operating environment, written consent and authorization from Abracon Corporation is required. Please contact Abracon Corporation for more information.

30332 Esperanza, Rancho Santa Margarita, California 92688
tel 949-546-8000 | fax 949-546-8001 | www.abracon.com