Honeywell

# Miniature Low Pressure Sensors

**26PC Series, Compensated/Unamplified**

1 psi to 250 psi

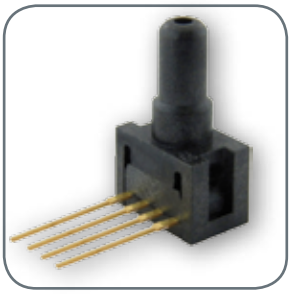

Datasheet

sales@prom-elec.com / ООО ПРОМЭЛЕКТРОНИКА

# Miniature Low Pressure Sensors

The 26PC Series Miniature Pressure Sensors are small, cost-effective devices intended for use with wet or dry media. These sensors feature proven sensing technology that uses a specialized piezoresistive micromachined sensing element to offer high performance, reliability, and accuracy. Each sensor contains four active piezoresistors that form a Wheatstone bridge. When pressure is applied, the resistance changes and the sensor provides a milliVolt output signal that is proportional to the input pressure.

The low power 26PC sensors are designed to accommodate pressures from 1 psi to 250 psi and have an operating temperature range of -40 ºC to 85 ºC [-40 ºF to 185 ºF].

These sensors can accommodate a variety of wet and dry media that are compatible with polyphthalamide (PPA) plastics and media seals specified in the Nomenclature and Order Guide (see Figure 2). The 26PC sensors are RoHS compliant. They are designed and manufactured according to ISO 9001 standards.

## *What makes our sensors better?*

- Wet/Wet capability (i.e., liquids on both ports)
- Selectable seals available to match media used
- Higher pressure ranges for use in high pressure applications
- Wide variety of pressure port types
- Available in both SIP and DIP packages

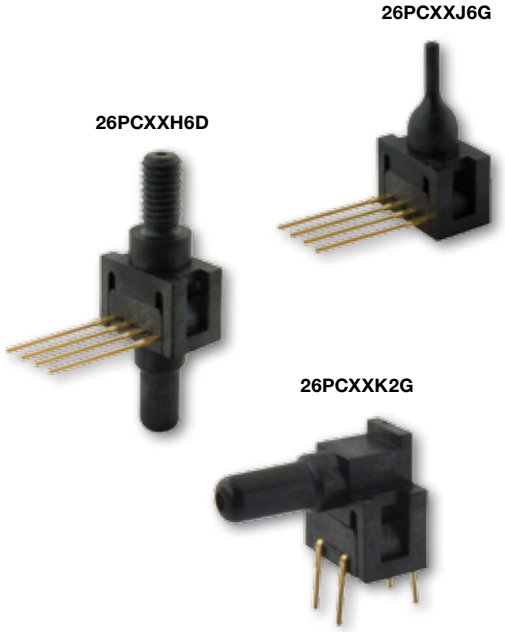


For all available configurations, see Table 4.

MINIATURE • WET/WET CAPABILITY • SELECTABLE SEALS

# Features and Benefits

## *One sensor does the work of two!*

**TRUE WET/WET DIFFERENTIAL MEDIA SENSING**

Provides liquid sensing in differential applications

**WIDE OPERATING TEMPERATURE RANGE OF -40 ºC TO 85 ºC [-40 ºF TO 185 ºF]**

Allows use in a wide variety of applications

## *By matching pressure ranges to the application, we optimize resolution and improve system accuracy.*

**VARIETY OF PRESSURE RANGES WITHIN 1 PSI TO 250 PSI**

Provides flexibility in customers' pneumatic designs

**ABSOLUTE, DIFFERENTIAL, AND GAGE MEASUREMENT TYPES**

Allows customers to choose the sensor that fits their application

## *Gives customers greater system flexibility in their designs.*

**VARIETY OF PRESSURE PORT TYPES AND LEAD TERMINATIONS**

Provides application flexibility

**ALSO AVAILABLE IN SMT AND FLOW-THROUGH PACKAGE STYLES**

Provides added design flexibility

# Potential Applications

## MEDICAL

### OXYGEN CONENTRATORS

May be used to measure the sieve bed pressure to optimize system performance

### DENTAL CHAIRS

May be used to control the pneumatic pressure in the various dental instruments

### HEMODIALYSIS

May be used to monitor the correct pressure to help ensure optimum blood filtration

## INDUSTRIAL

### WATER CONTROL VALVES

May be used to monitor the water consumption in homes and buildings

### IRRIGATION EQUIPMENT

May be used to control the water pressure and flow being delivered

### FILTER MONITORING

May be used to detect when the filters are clogged and need to be replaced

### PRESSURE VALVES

May be used to measure and control pressure in industrial processes

### AIR COMPRESSORS

May be used to control the pressure being delivered to the end user equipment

### BREATHALIZERS

May be used to measure the exhalation pressure to ensure proper breath analysis

# 26PC Series, Compensated/Unamplified

**Table 1. Absolute Maximum Ratings[1]**

| Characteristic | Min. | Typ. | Max. | Unit | Note |
|---|---|---|---|---|---|
| Supply voltage | 2.5 | 10 | 16 | Vdc | – |
| Input resistance | 5.5 | 7.5 | 11.5 | kOhm | – |
| Output resistance | 1.5 | 2.5 | 3 | kOhm | – |
| Time response | – | – | 1 | ms | 2 |

[1]Absolute maximum ratings are the extreme limits the device will withstand without damage.

[2]Time required for the output to increase from 10% to 90% of span in response to a step change in input pressure from the specified min. to max. operating pressure.

**Table 2. Technical Specifications**

| Characteristic | Parameter |
|---|---|
| Operating temperature range:<br>without EPDM seals<br>with EPDM seals | <br>-40 °C to 85 °C [-40 °F to 185 °F]<br>-20 °C to 85 °C [-4 °F to 185 °F] |
| Compensated temperature range | 0 °C to 50 °C [32 °F to 122 °F] |
| Storage temperature range | -55 °C to 100 °C [-67 °F to 212 °F] |
| Soldering terminal temperature/time | 315 °C [599 °F] max./10 s max. |
| Vibration | 10 G at 20 Hz to 2000 Hz |
| Shock | 100 G for 11 ms |
| Life | 1 million cycles min. |

# Miniature Low Pressure Sensors

**Table 3. Performance Characteristics (Vcc =10.00 ±0.01 Vdc; Ta = 25 °C [77 °F])**

| Characteristic | 0 psi to 1 psi | | 0 psi to 5 psi | | 0 psi to 15 psi | | 0 psi to 30 psi | | 0 psi to 100 psi | | 0 psi to 250 psi | | Unit | Note |
|---|---|---|---|---|---|---|---|---|---|---|---|---|---|---|
| | Typ. | Max. | Typ. | Max. | Typ. | Max. | Typ. | Max. | Typ. | Max. | Typ. | Max. | | |
| Span | – | 16.7 ±2 | – | 50 ±3 | – | 100 ±3 | – | 100 ±3 | – | 100 ±3 | – | 150 ±7 | mV | 1 |
| Null offset | – | 0 ±1.5 | – | 0 ±1.5 | – | 0 ±1.5 | – | 0 ±1.5 | – | 0 ±2.0 | – | 0 ±2.0 | mV | 2 |
| Linearity (Best Fit Straight Line, P2>P1) | 0.25 | 0.5 | 0.4 | 0.5 | 0.25 | 0.5 | 0.1 | 0.2 | 0.4 | 0.6 | 0.5 | 0.7 | %span | 3 |
| Null shift (0 °C to 25 °C, 25 °C to 50 °C) | ±0.5 | ±1.0 | ±0.5 | ±1.0 | ±0.5 | ±1.0 | ±0.75 | ±1.5 | ±1.0 | ±2.0 | ±1.0 | ±2.0 | mV | 4 |
| Span shift (0 °C to 25 °C, 25 °C to 50 °C) | ±1.0 | ±2.0 | ±1.0 | ±1.5 | ±0.75 | ±1.5 | ±0.75 | ±1.5 | ±0.5 | ±1.5 | ±0.5 | ±1.5 | %span | 5 |
| Repeatability and hysteresis | ±0.5 | – | ±0.2 | – | ±0.2 | – | ±0.2 | – | ±0.2 | – | ±0.2 | – | mV | 6 |
| Overpressure | – | 20 | – | 20 | – | 45 | – | 60 | – | 200 | – | 500 | psi | 7 |

[1]Span is the algebraic difference between the output signal measured at the upper and lower limits of the operating pressure range, where Port 2 (P2)>Port 1 (P1).

[2]The output signal obtained when zero pressure is applied to all available ports.

[3]The maximum deviation of product output from a straight line fitted to the output measured over the specified operating pressure range, calculated according to BFSL. The straight line is fitted along a set of points that minimizes the sum of the square of the deviations of each of the points ("least-squares" method).

[4]The maximum deviation in offset due to changes in temperature over the compensated temperature range, relative to offset measured at a reference temperature of 25 °C.

[5]The maximum deviation in span due to changes in temperature over the compensated temperature range, relative to full-scale span measured at a reference temperature of 25 °C.

[6]Repeatability is the maximum difference between the output readings when the same pressure is applied consecutively, under the same operating conditions, with pressure approaching from the same direction within the specified operating pressure range. Hysteresis is the maximum difference between output readings when the same pressure is applied consecutively, under the same operating conditions, with pressure approaching from opposite directions within the specified operating pressure range.

[7]Overpressure is the maximum pressure that may safely be applied to the product for it to remain in specification once pressure is returned to the operating pressure range. Exposure to higher pressures may cause permanent damage to the product. Unless otherwise specified, this applies to all available pressure ports at any temperature within the operating temperature range.

**Figure 1. Circuit Diagram**

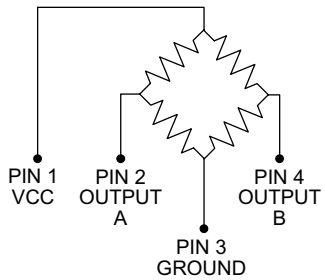


Output "A" increases as P2 pressure increases.

Output "B" deceases as P2 pressure increases.

| Symbol | Description |
|---|---|
| Vcc | supply |
| OUTPUT A | bridge positive output |
| GROUND | ground |
| OUTPUT B | bridge negative output |

# 26PC Series, Compensated/Unamplified

**Figure 2. Nomenclature and Order Guide[1, 4]**

For example, a **26PCBEJ6G** catalog listing defines a 26PC Series Miniature Low Pressure Sensor, Compensated/Unamplified, 5 psi pressure range, EPDM seal material, needle pressure port type, 1 x 4 SIP, 15,2 mm [0.60 in] long termination configuration, with normal polarity output and gage pressure measurement type.

**26PC** — Product Series

**26PC** Series Miniature Low Pressure Sensors, Compensated/ Unamplified

**B** — Pressure Range

| | |
|---|---|
| **A** | 1 psi |
| **B** | 5 psi |
| **C** | 15 psi |
| **D** | 30 psi |
| **F** | 100 psi |
| **G** | 250 psi |

**E** — Seal Material

| | |
|---|---|
| **F** | fluorosilicone |
| **E** | EPDM |
| **N** | neoprene[2] |

**J** — Pressure Port Type

| | |
|---|---|
| **A** | Straight |
| **B** | Barbed |
| **C** | Luer |
| **D** | Modular |
| **H** | M5 thread port |
| **I** | 90° (opposite Pin 1) |
| **J** | Needle |
| **K** | 90° (toward Pin 1) |
| **M** | 1/4-28 thread |
| **S** | Manifold mount |
| **T** | Long barbed |

**6G** — Termination Configuration, Output, Pressure Measurement Type

| | |
|---|---|
| **6D** | 1 x 4 SIP, 15,2 mm [0.60 in] long, normal polarity, differential |
| **6G** | 1 x 4 SIP, 15,2 mm [0.60 in] long, normal polarity, gage |
| **1G** | 1 x 4 SIP, 10,2 mm [0.40 in] long, normal polarity, gage |
| **2G** | 2 x 2 DIP, normal polarity, gage |

[1]Every combination may not be possible. Contact customer service.

[2]Available in 1 psi, 5 psi and 15 psi pressure ranges only.

[3]Absolute pressure sensors require pressure port types A or D.

# Miniature Low Pressure Sensors

**Table 4. All Available Standard Configurations (See Figure 2.)**

| | | Termination Configuration, Output, Pressure Measurement Type | | | |
|---|---|---|---|---|---|
| | | 6D | 6G | 1G | 2G |
| Pressure Port Type | A Straight | | | N/A | |
| | B Barbed | | 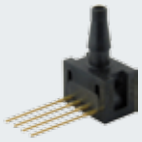 | | |
| | C Luer | | | | |
| | D Modular | | 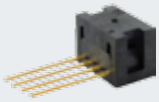 | N/A | 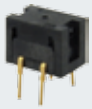 |
| | H M5 Thread | | | | |
| | I 90° (Opposite Pin 1) | 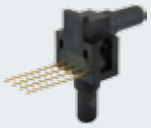 | 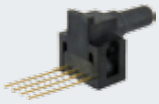 | N/A | N/A |
| | J Needle | | | N/A | |
| | K 90° (Toward Pin 1) | | 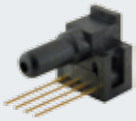 | N/A | |
| | M 1/4-28 Thread | | | | |
| | S Manifold Mount | 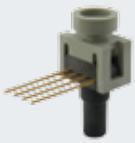 | 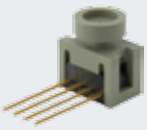 | 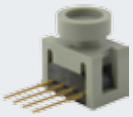 | |
| | T Long Barbed | | | N/A | |

# 26PC Series, Compensated/Unamplified

**Figure 3. Mounting Dimensions (For Reference Only: mm/[in].)**

## 26PCXXA6D

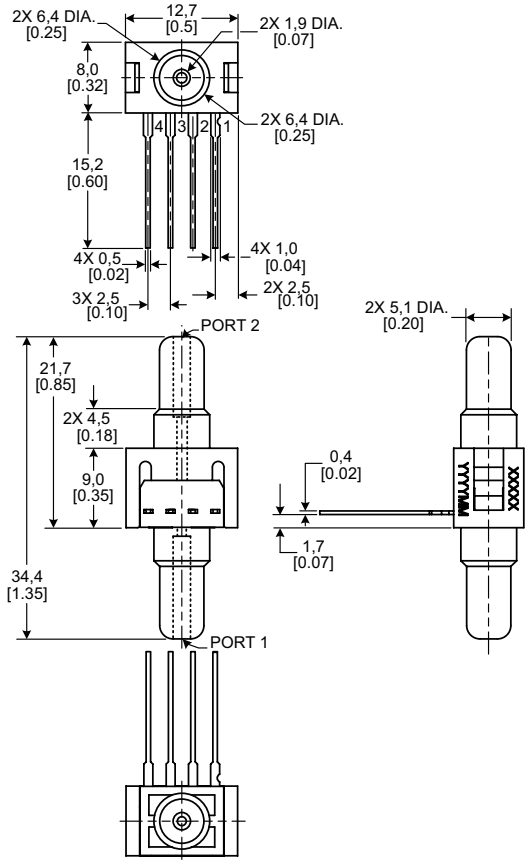


## 26PCXXA6G

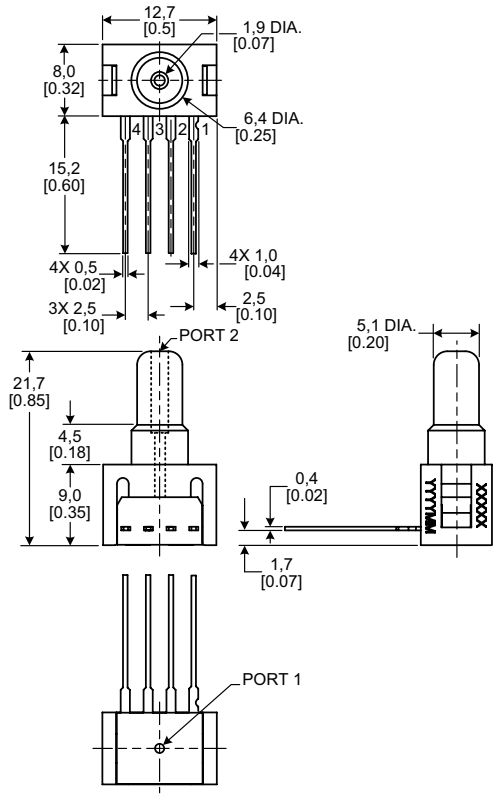


## 26PCXXA2G

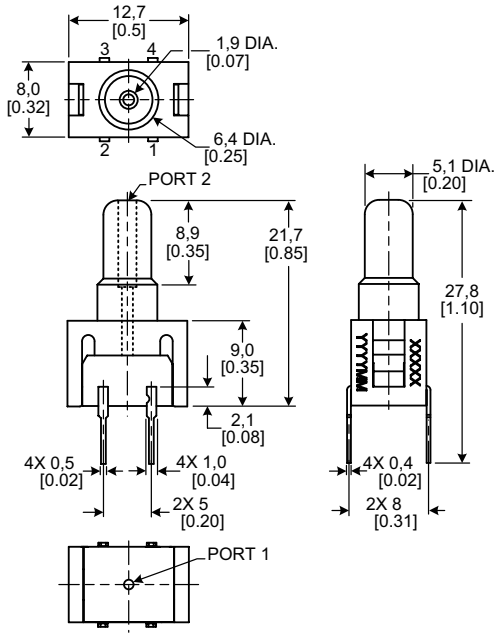


## 26PCXXB6D

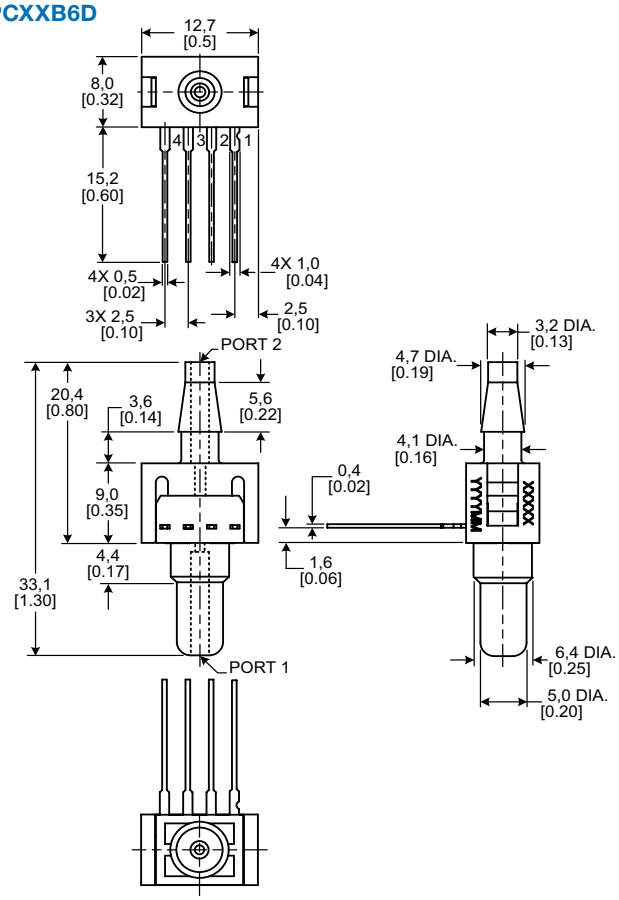

**Figure 3. Mounting Dimensions (continued)**

### 26PCXXB6G

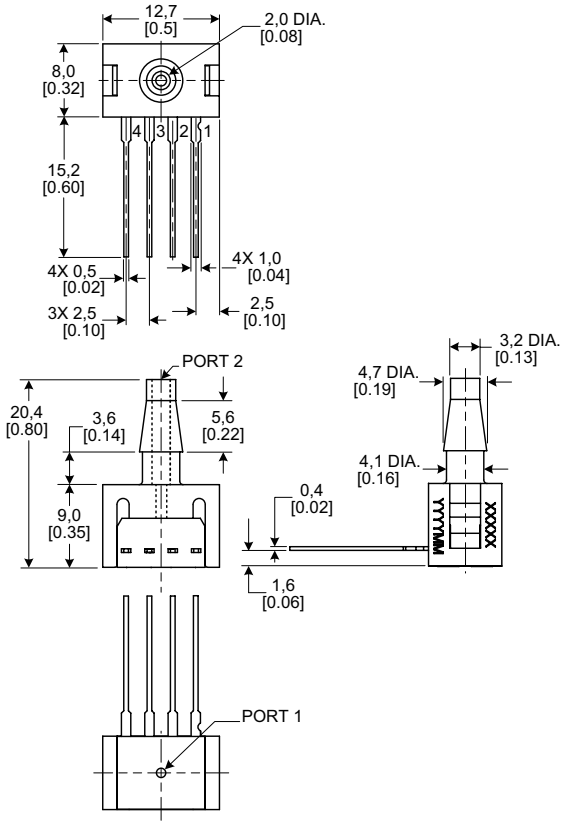


### 26PCXXB1G

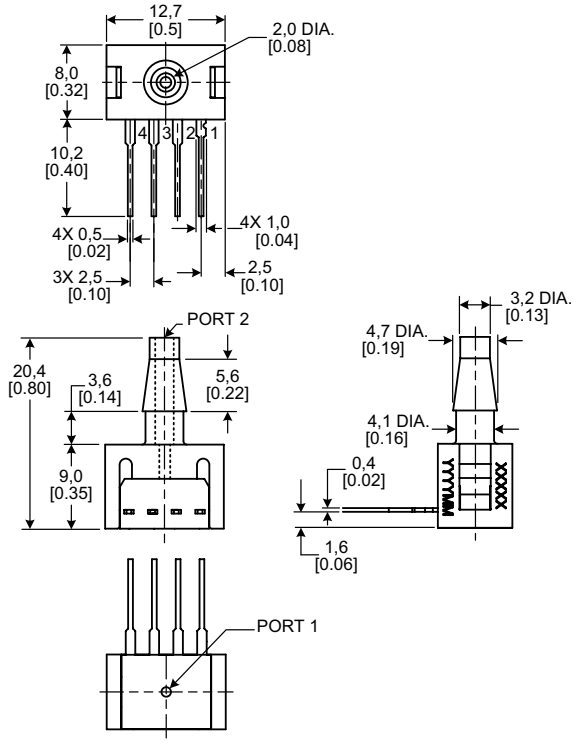


### 26PCXXB2G

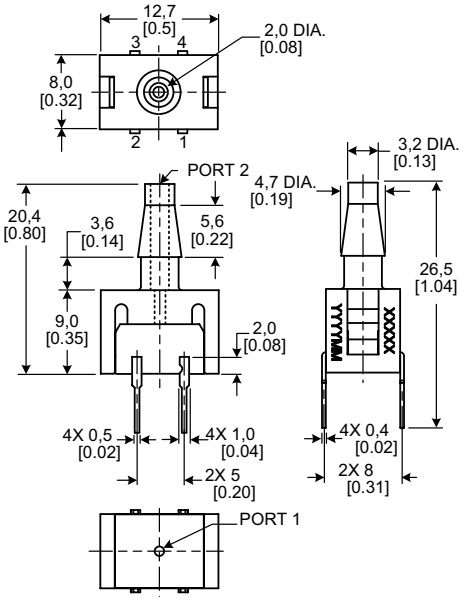


### 26PCXXC6D

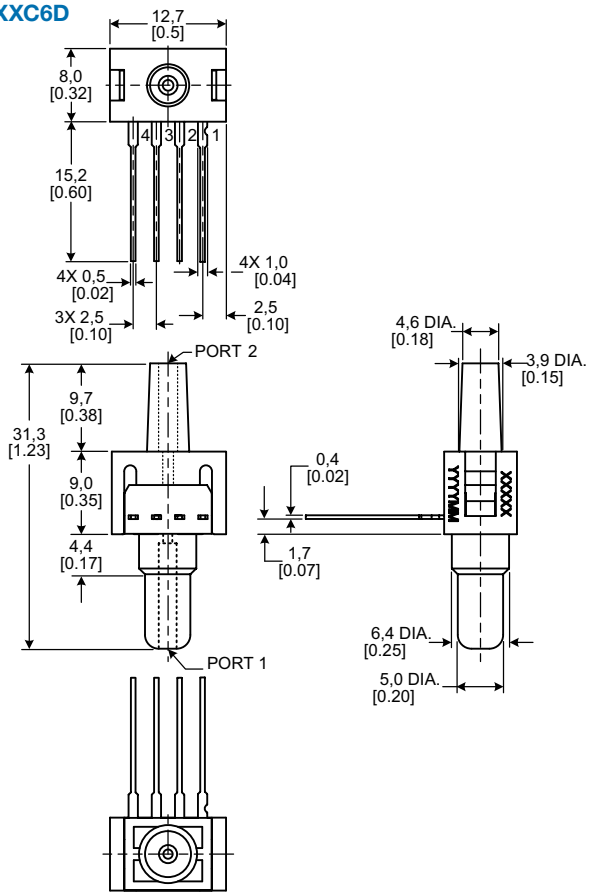

**Figure 3. Mounting Dimensions (continued)**

### 26PCXXC6G

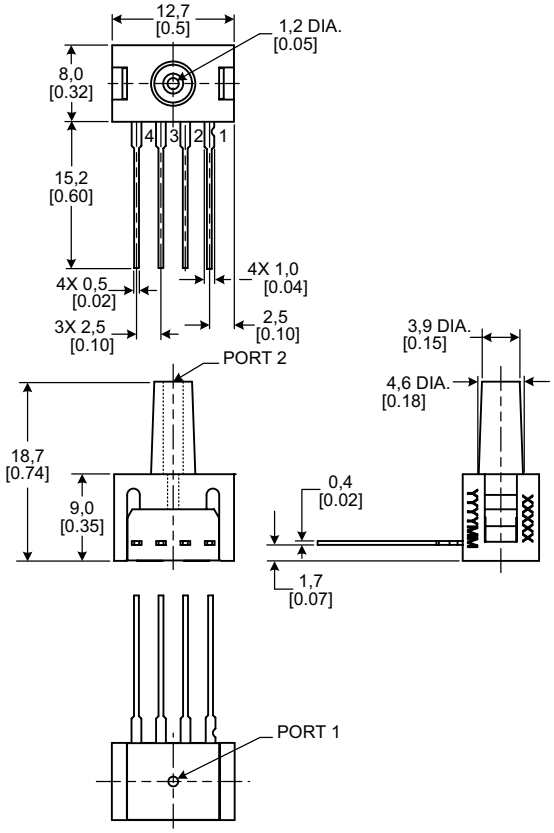


### 26PCXXC1G

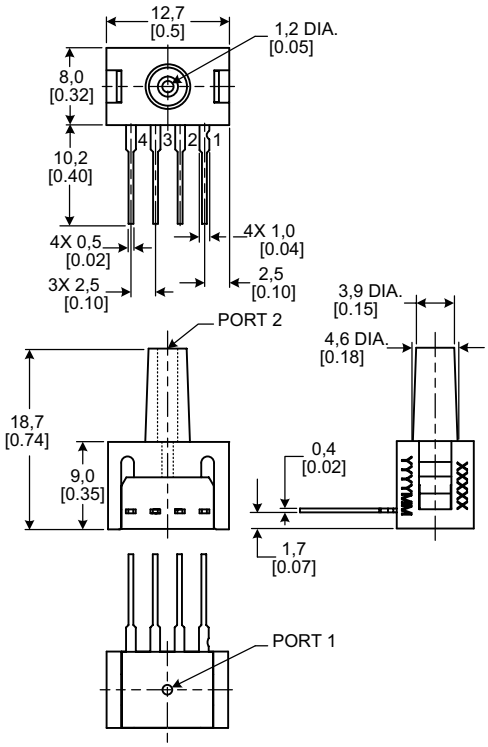


### 26PCXXC2G

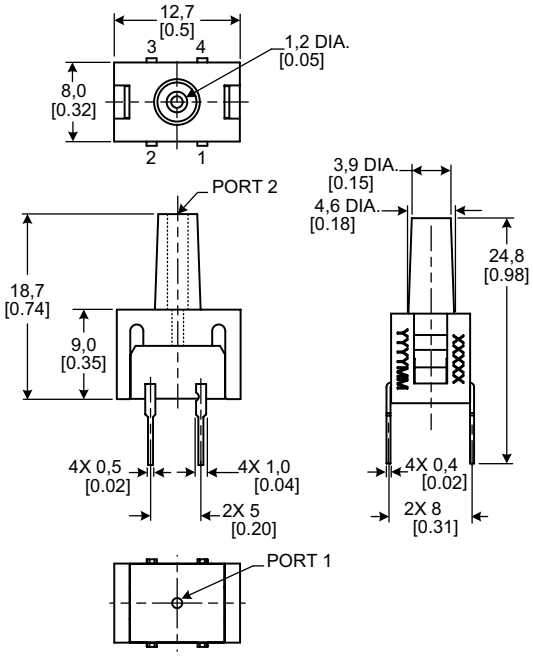


### 26PCXXD6D

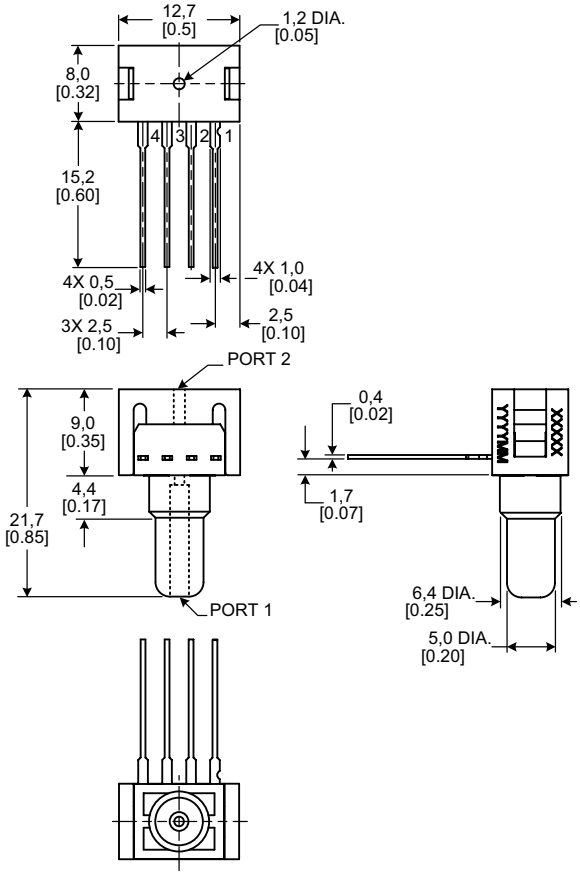

**Figure 3. Mounting Dimensions (continued)**

### 26PCXXD6G

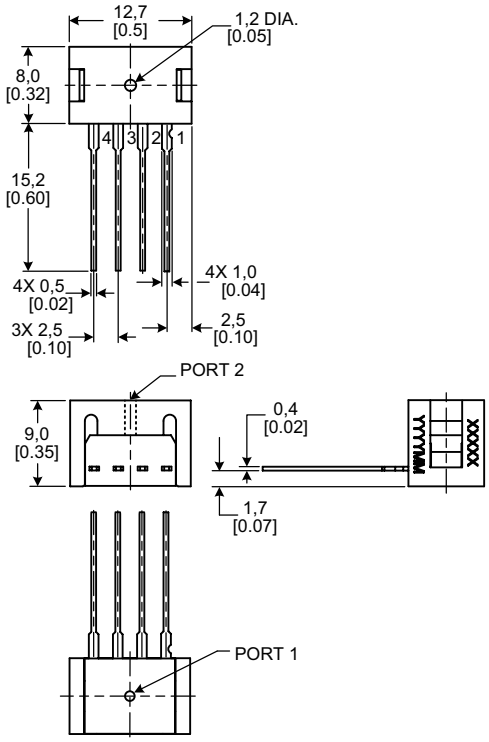


### 26PCXXD2G

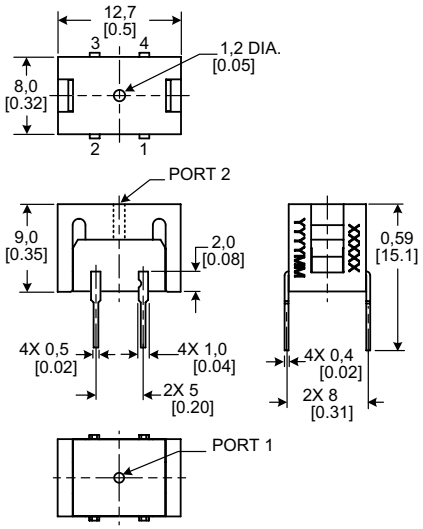


### 26PCXXH6D

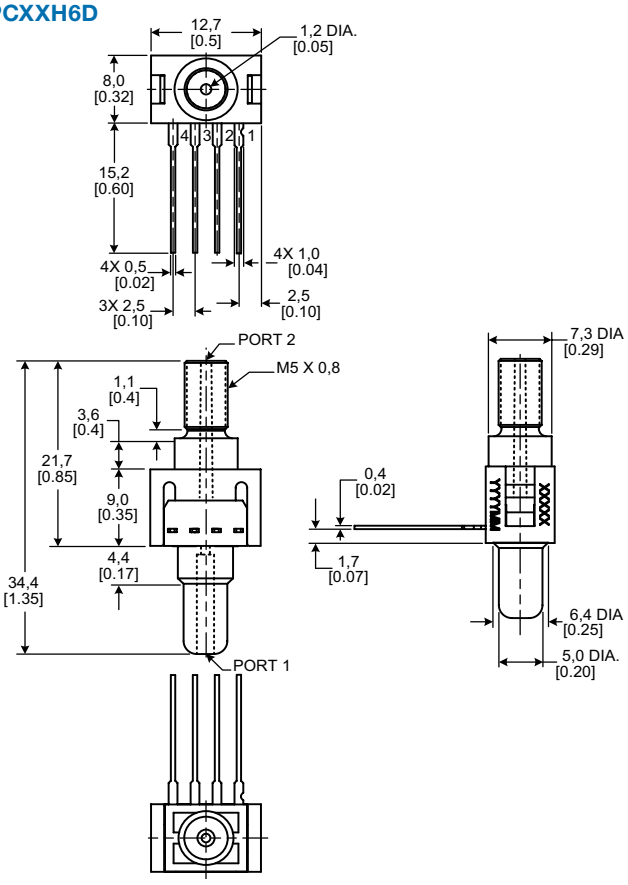


### 26PCXXH6G

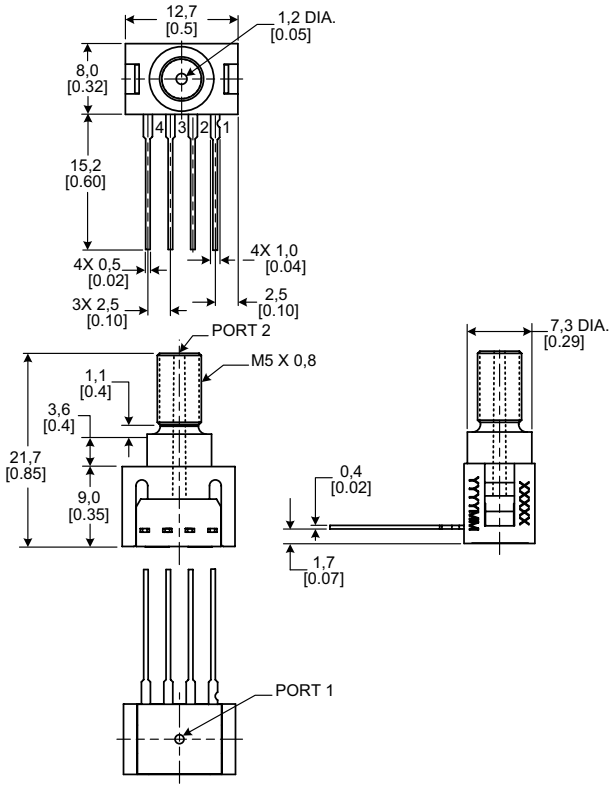

**Figure 3. Mounting Dimensions (continued)**

### 26PCXXH1G

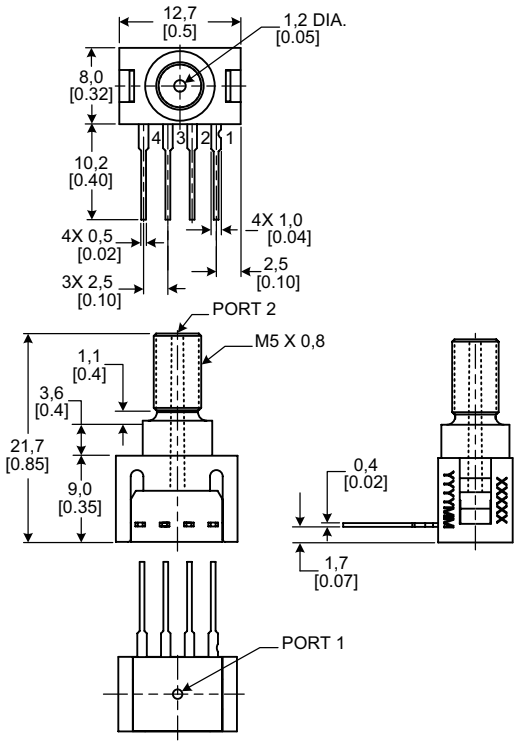


### 26PCXXH2G

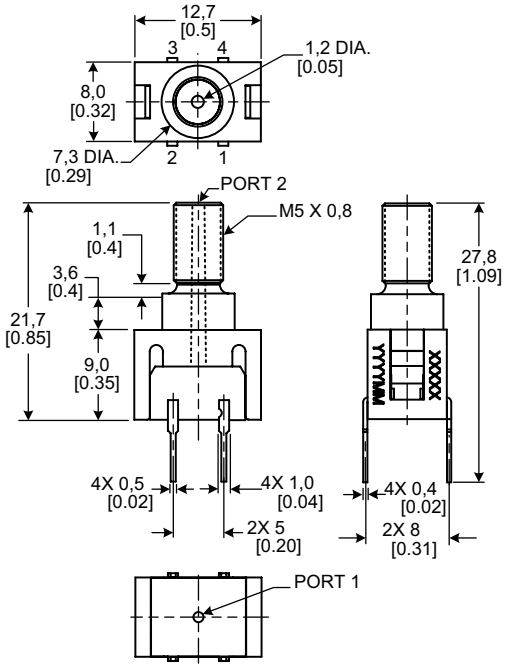


### 26PCXXI6D

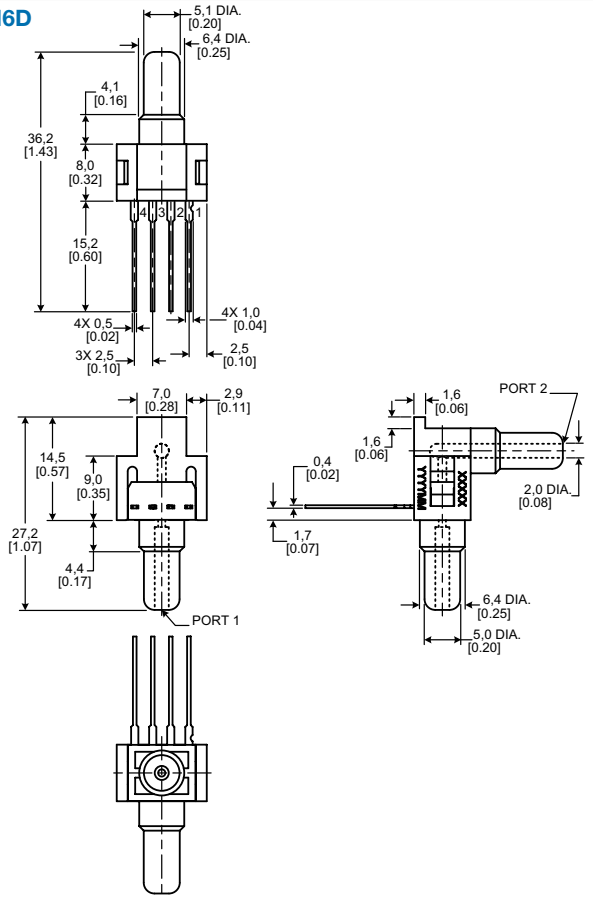


### 26PCXXI6G

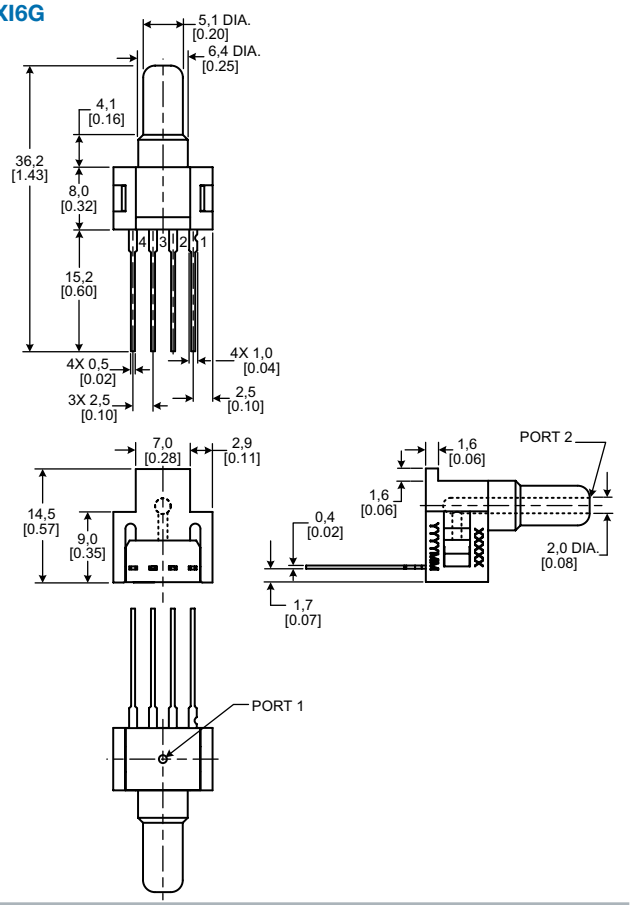

**Figure 3. Mounting Dimensions (continued)**

**26PCXXJ6D**

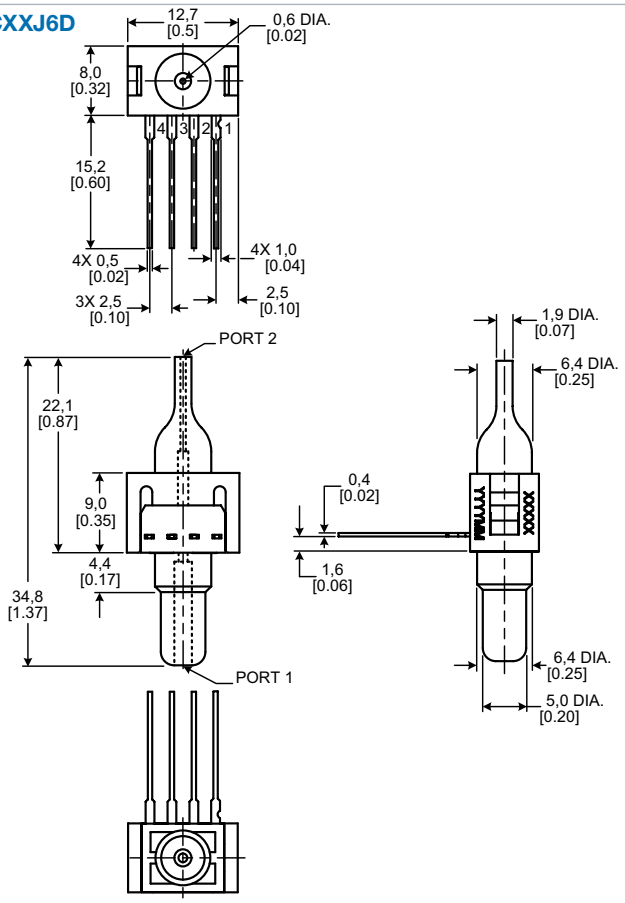


**26PCXXJ6G**

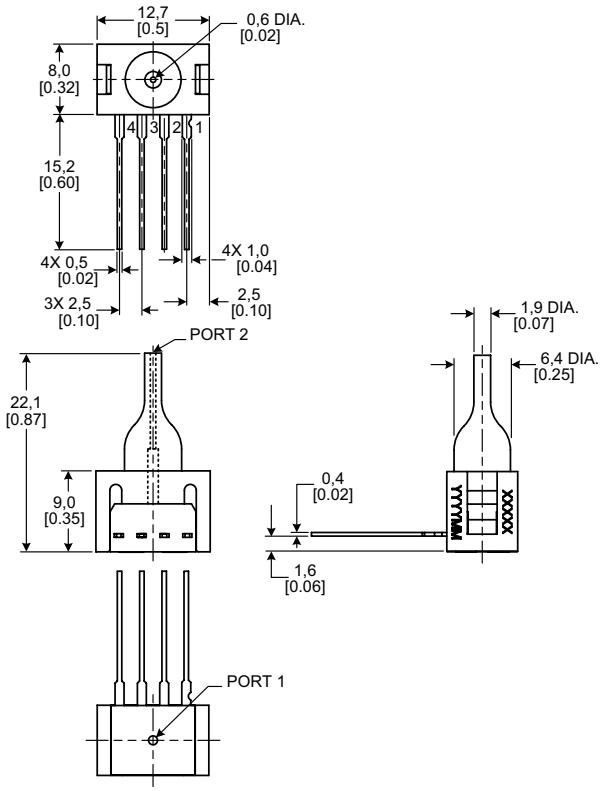


**26PCXXJ2G**

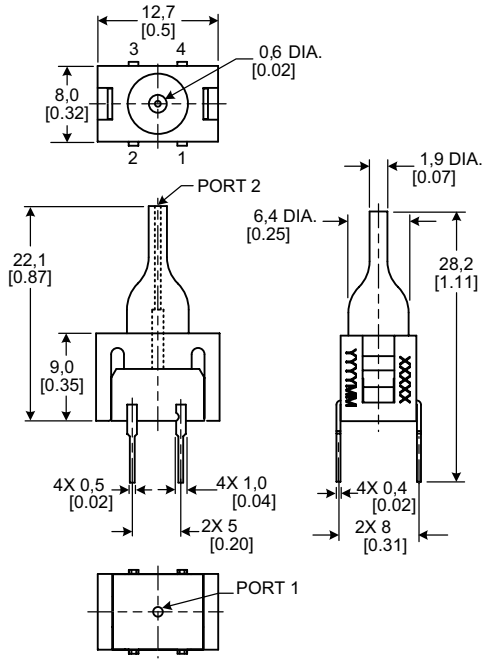


**26PCXXK6D**

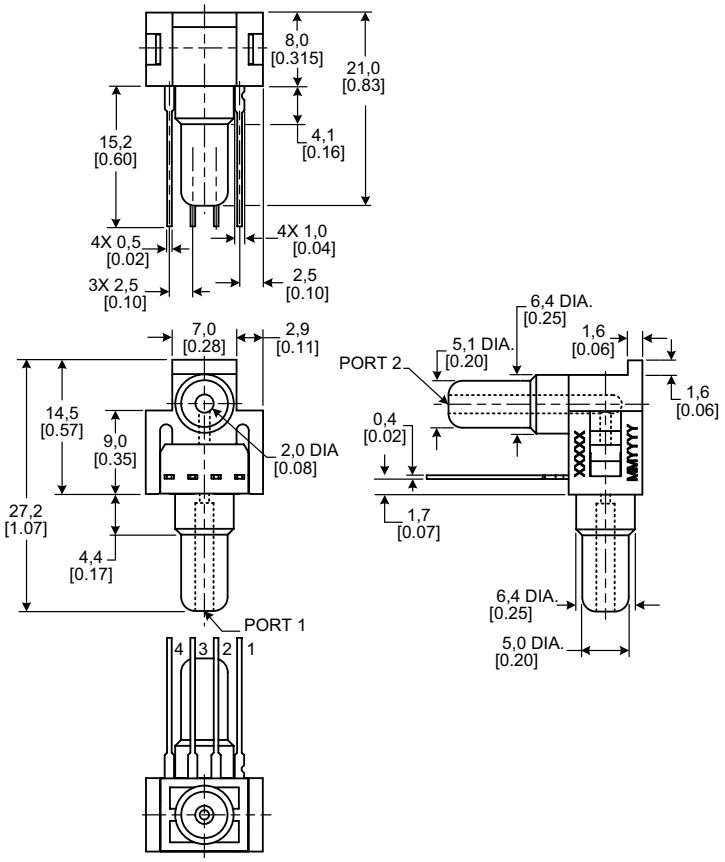

**Figure 3. Mounting Dimensions (continued)**

### 26PCXXK6G

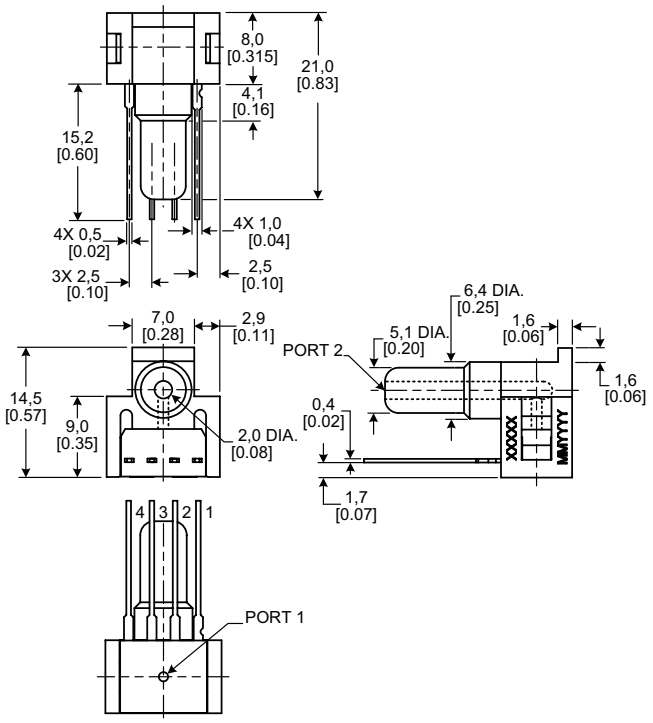


### 26PCXXK2G

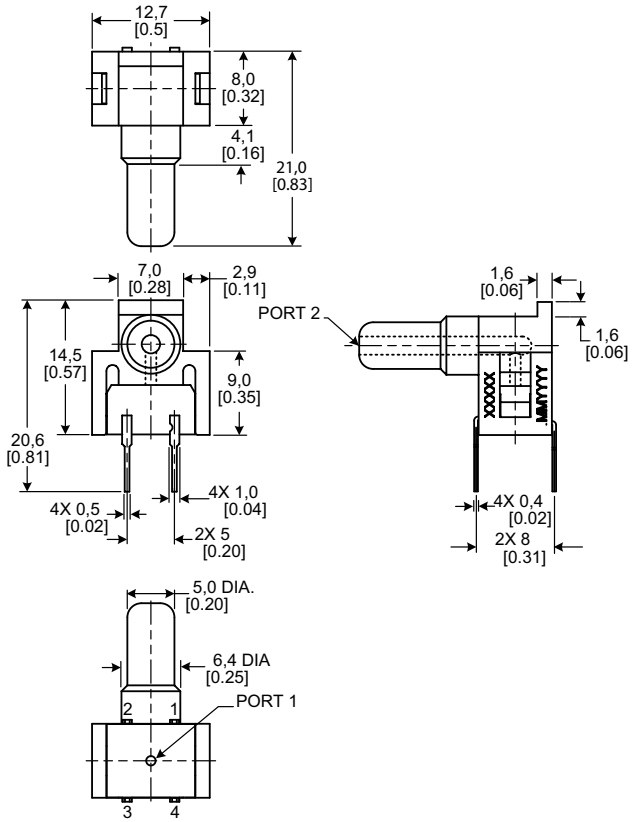


### 26PCXM6D

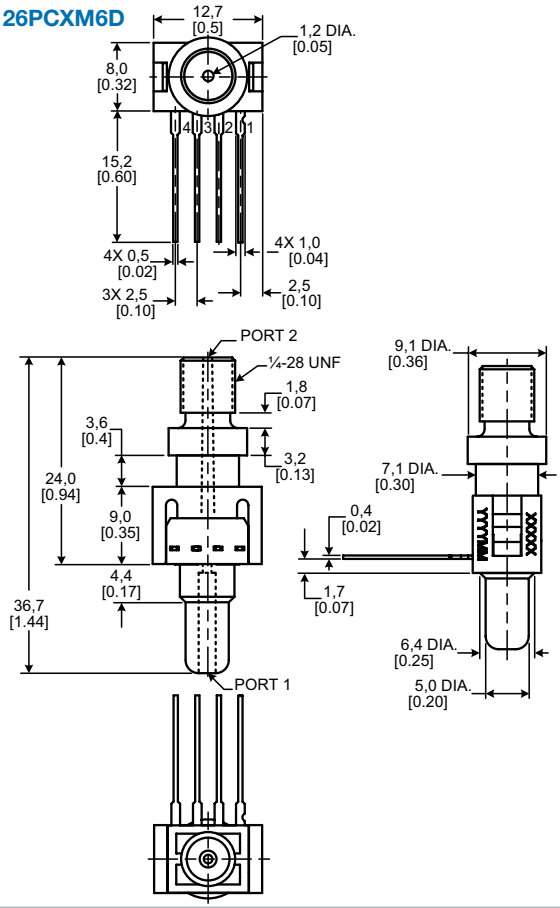


### 26PCXXM6G

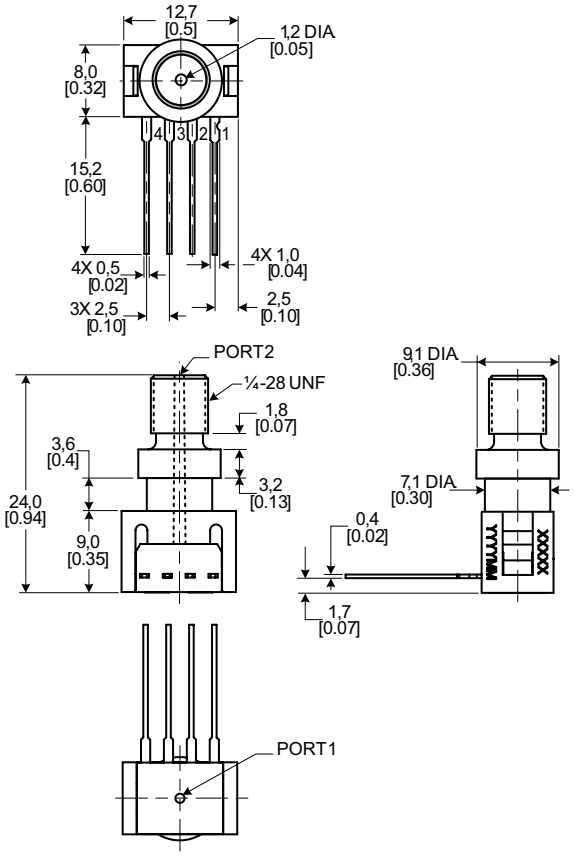

**Figure 3. Mounting Dimensions (continued)**

### 26PCXXM1G

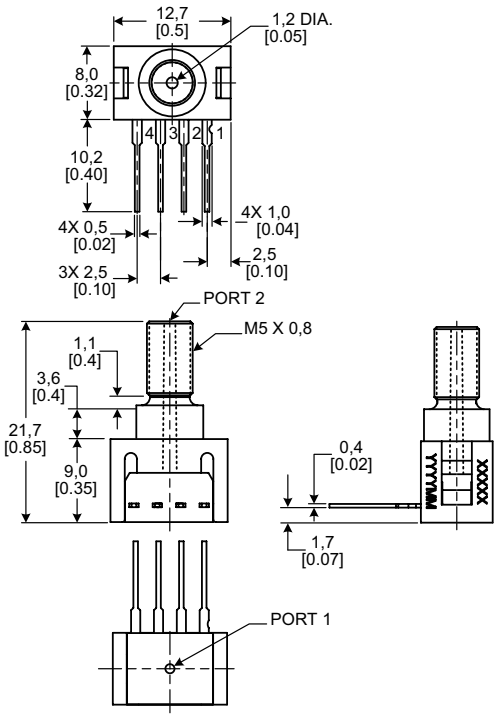


### 26PCXXM2G

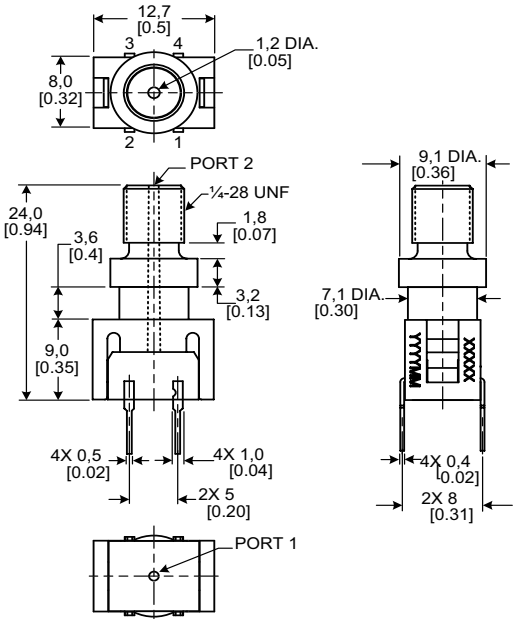


### 26PCXXS6D

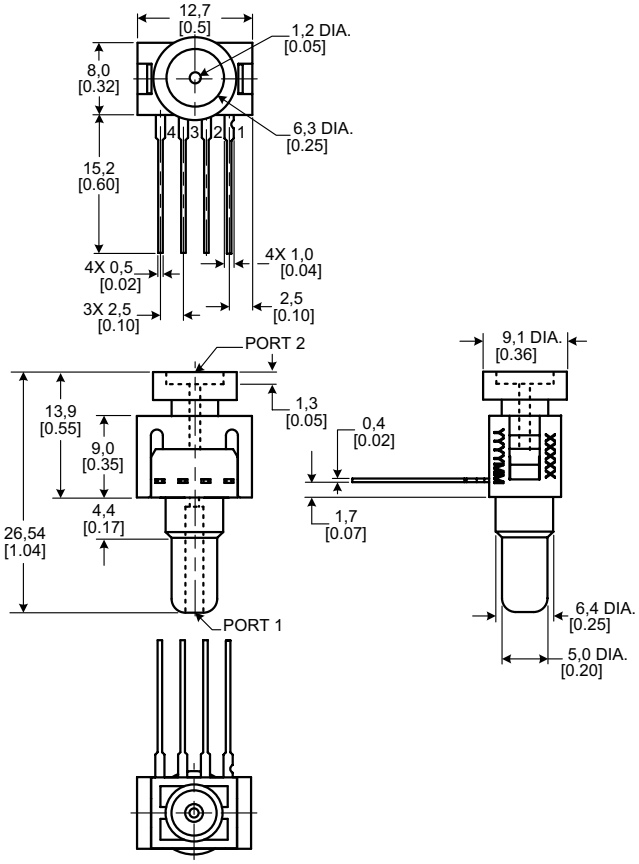


### 26PCXXS6G

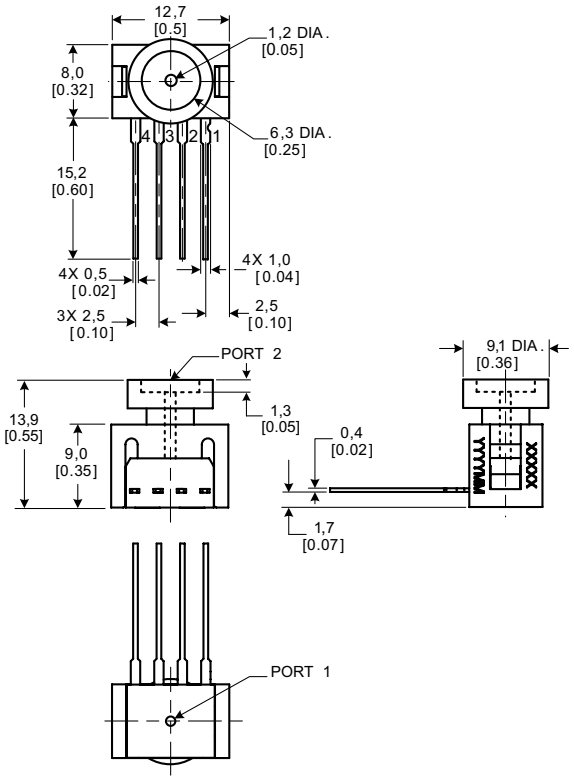

**Figure 3. Mounting Dimensions (continued)**

### 26PCXXS1G

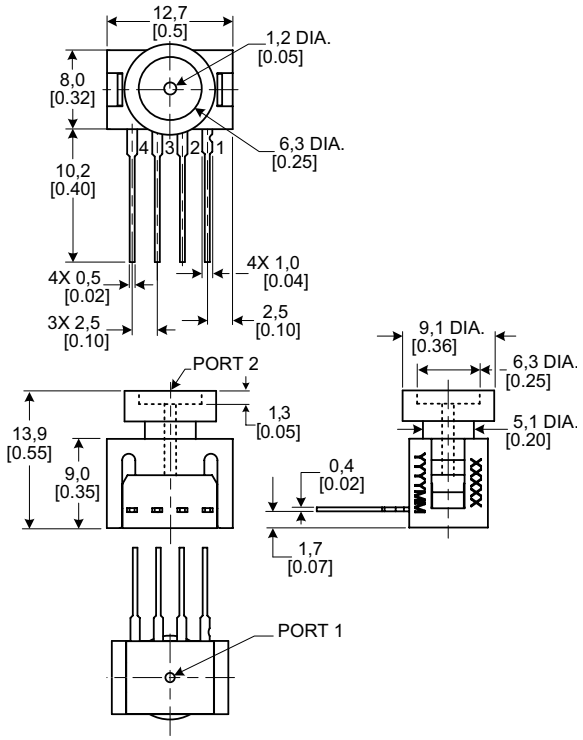


### 26PCXXS2G

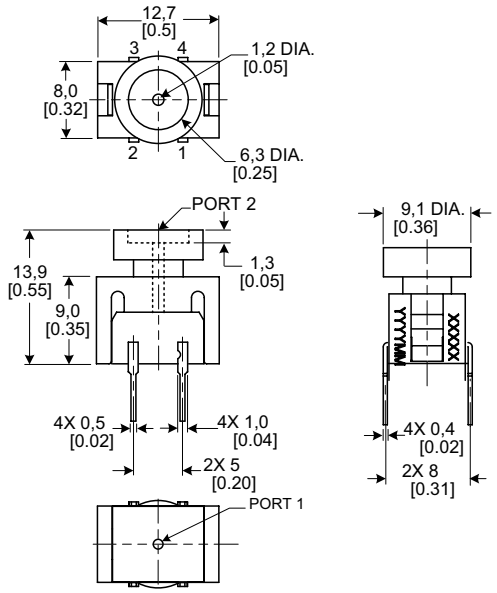


### 26PCXXT6D

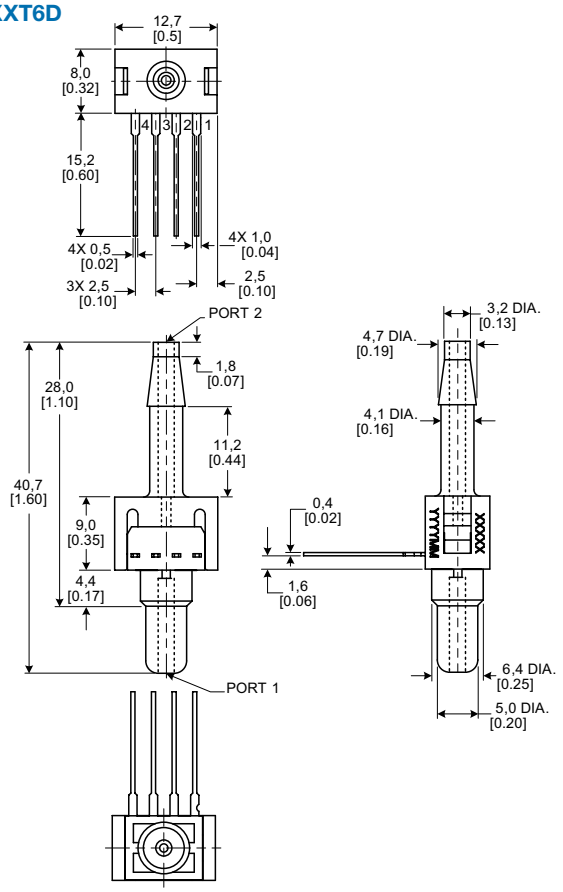


### 26PCXXT6G

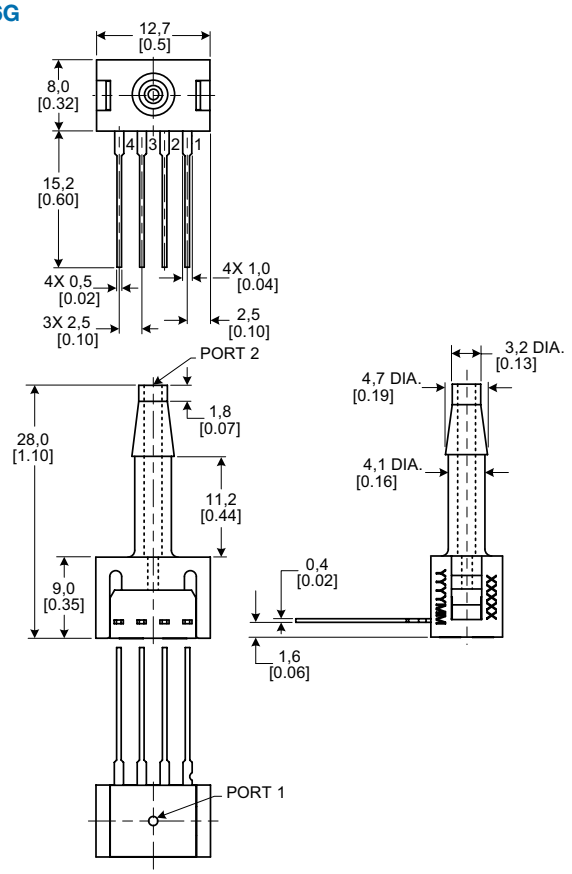

**Figure 3. Mounting Dimensions (continued)**

**26PCXXT2G**

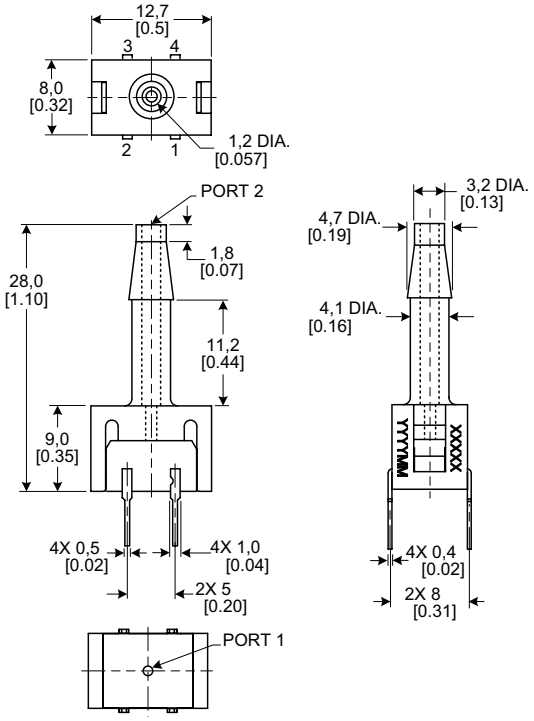

## ADDITIONAL INFORMATION

The following associated literature is available at sensing.honeywell.com:

- Product Line Guide
- Product Range Guide
- Product Installation Instructions
- Application-Specific Information
- Technical Notes

**Find out more**

Honeywell serves its customers through a worldwide network of sales offices, representatives and distributors. For application assistance, current specifications, pricing or name of the nearest Authorized Distributor, contact your local sales office.

To learn more about Honeywell's sensing and control products, call **+1-815-235-6847 or 1-800-537-6945**, visit **sensing.honeywell.com,** or e-mail inquiries to **info.sc@honeywell.com**

Sensing and Control
Honeywell
1985 Douglas Drive North
Golden Valley, MN 55422
**honeywell.com**

## ⚠ WARNING
### PERSONAL INJURY

DO NOT USE these products as safety or emergency stop devices or in any other application where failure of the product could result in personal injury.

**Failure to comply with these instructions could result in death or serious injury.**

## ⚠ WARNING
### MISUSE OF DOCUMENTATION

- The information presented in this product sheet is for reference only. Do not use this document as a product installation guide.
- Complete installation, operation, and maintenance information is provided in the instructions supplied with each product.

**Failure to comply with these instructions could result in death or serious injury.**

## WARRANTY/REMEDY

Honeywell warrants goods of its manufacture as being free of defective materials and faulty workmanship. Honeywell's standard product warranty applies unless agreed to otherwise by Honeywell in writing; please refer to your order acknowledgement or consult your local sales office for specific warranty details. If warranted goods are returned to Honeywell during the period of coverage, Honeywell will repair or replace, at its option, without charge those items it finds defective. **The foregoing is buyer's sole remedy and is in lieu of all other warranties, expressed or implied, including those of merchantability and fitness for a particular purpose. In no event shall Honeywell be liable for consequential, special, or indirect damages.**

While we provide application assistance personally, through our literature and the Honeywell website, it is up to the customer to determine the suitability of the product in the application.

Specifications may change without notice. The information we supply is believed to be accurate and reliable as of this printing. However, we assume no responsibility for its use.

Honeywell

32307741-A-EN IL50
May 2015
© 2015 Honeywell International Inc. All rights reserved.