Datasheet SPS30

Particulate Matter Sensor for Air Quality Monitoring and Control

- Unique long-term stability
- Advanced particle size binning
- Superior precision in mass concentration and number concentration sensing
- Small, ultra-slim package
- Fully calibrated digital output

Product Summary
The SPS30 Particulate Matter (PM) sensor is a technological breakthrough in optical PM sensors. Its measurement principle is based on laser scattering and makes use of Sensirion's innovative contamination-resistance technology. This technology, together with high-quality and long-lasting components, enables precise measurements from its first operation and throughout its lifetime of more than ten years. In addition, Sensirion's advanced algorithms provide superior precision for different PM types and higher-resolution particle size binning, opening up new possibilities for the detection of different sorts of environmental dust and other particles. With dimensions of only 41 x 41 x 12 mm^3, it is also the perfect solution for applications where size is of paramount importance, such as wall-mounted or compact air quality devices.

Content

1 Particulate Matter Sensor Specifications 2
2 Electrical Specifications 3
3 Hardware Interface Specifications 4
4 Functional Overview 5
5 Operation and Communication through the UART Interface 8
6 Operation and Communication through the I^2C Interface 16
7 Mechanical Specifications 23
8 Shipping Package 24
9 Ordering Information 24
10 Revision History 24
11 Important Notices 25
12 Headquarters and Subsidiaries 26

sales@prom-elec.com / ООО ПРОМЭЛЕКТРОНИКА

1 Particulate Matter Sensor Specifications

1.1 Specification Overview

Parameter	Conditions		Value	Units
Mass concentration range	-		0 to 1'000	µg/m³
Mass concentration size range	PM1.0		0.3 to 1.0	µm
	PM2.5		0.3 to 2.5	µm
	PM4		0.3 to 4.0	µm
	PM10		0.3 to 10.0	µm
Mass concentration precision[1,2] for PM1 and PM2.5[3]	0 to 100 µg/m³		±10	µg/m³
	100 to 1000 µg/m³		±10	% m.v.
Mass concentration precision[1,2] for PM4, PM10[4]	0 to 100 µg/m³		±25	µg/m³
	100 to 1000 µg/m³		±25	% m.v.
Maximum long-term mass concentration precision limit drift	0 to 100 µg/m³		±1.25	µg/m³ / year
	100 to 1000 µg/m³		±1.25	% m.v. / year
Number concentration range	-		0 to 3'000	#/cm³
Number concentration size range	PM0.5		0.3 to 0.5	µm
	PM1.0		0.3 to 1.0	µm
	PM2.5		0.3 to 2.5	µm
	PM4		0.3 to 4.0	µm
	PM10		0.3 to 10.0	µm
Number concentration precision[1,2] for PM0.5, PM1 and PM2.5[3]	0 to 1000 #/cm³		±100	#/cm³
	1000 to 3000 #/cm³		±10	% m.v.
Number concentration precision[1,2] for PM4, PM10[4]	0 to 1000 #/cm³		±250	#/cm³
	1000 to 3000 #/cm³		±25	% m.v.
Maximum long-term number concentration precision limit drift[2]	0 to 1000 #/cm³		±12.5	#/cm³ / year
	1000 to 3000 #/cm³		±1.25	% m.v. / year
Sampling interval	-		1±0.04	s
Typical start-up time[5]	number concentration	200 – 3000 #/cm³	8	s
		100 – 200 #/cm³	16	s
		50 – 100 #/cm³	30	s
Sensor output characteristics	PM2.5 mass concentration		Calibrated to TSI DustTrak™ DRX 8533 Ambient Mode	
	PM2.5 number concentration		Calibrated to TSI OPS 3330	
Lifetime[6]	24 h/day operation		> 10	years
Acoustic emission level	0.2 m	max.	25	dB(A)
Long term acoustic emission level drift	0.2 m	max.	+0.5	dB(A) / year
Additional T-dependent mass and number concentration precision limit drift[2]	temperature difference to 25°C	typ.	±0.5	% m.v. / °C
Weight	-		26.3 ±0.3	g

[1] Also referred to as "between-parts variation" or "device-to-device variation".
[2] For further details, please refer to the document "Sensirion Particulate Matter Sensor Specification Statement".
[3] Verification Aerosol for PM2.5 is a 3% atomized KCl solution. Deviation to reference instrument is verified in end-tests for every sensor after calibration.
[4] PM4 and PM10 output values are calculated based on distribution profile of all measured particles.
[5] Time after starting Measurement-Mode, until a stable measurement is obtained.
[6] Lifetime is based on mean-time-to-failure (MTTF) calculation. Lifetime might vary depending on different operating conditions.

Laser wavelength (DIN EN 60825-1 Class 1)	LASER 1	typ.	660	nm

Table 1: Particulate matter sensor specifications. Default conditions of 25±2 °C, 50±10% relative humidity and 5 V supply voltage apply unless otherwise stated. 'max.' means 'maximum', 'typ.' means 'typical', '% m.v.' means '% of measured value'.

1.2 Recommended Operating Conditions

The sensor shows best performance when operated within recommended normal temperature and humidity range of 10 to 40 °C and 20 to 80 % RH, respectively.

2 Electrical Specifications

2.1 Electrical Characteristics

Parameter	Conditions	Min	Typ	Max	Unit
Supply voltage	-	4.5	5.0	5.5	V
Supply current	Sleep-Mode	-	38	50	µA
	Idle-Mode	300	330	360	
	Measurement-Mode	45	55	65	mA
	Measurement-Mode, first 200ms (fan start)	-	-	80	
Input high level voltage (V_{IH})	-	2.31	-	5.5	V
Input low level voltage (V_{IL})	-	0	-	0.99	
Output high level voltage (V_{OH})	-	2.9	3.3	3.37	
Output low level voltage (V_{OL})	-	0	0	0.4	

Table 2: Electrical specifications at 25°C.

2.2 Absolute Minimum and Maximum Ratings

Stress levels beyond those listed in Table 3 may cause permanent damage to the device. These are stress ratings only and functional operation of the device at these conditions cannot be guaranteed. Exposure to the absolute maximum rating conditions for extended periods may affect the reliability of the device.

Parameter	Min	Max	Unit
Supply voltage VDD	-0.3	5.5	V
Interface Select SEL	-0.3	4.0	
I/O pins (RX/SDA, TX/SCL)	-0.3	5.5	
Max. current on any I/O pin	-16	16	mA
Operating temperature range	-10	60	°C
Storage temperature range	-40	70	
Operating humidity range	0	95	% RH

Table 3: Absolute minimum and maximum ratings.

2.3 ESD / EMC Ratings

Immunity (Industrial level)

Description	Standard	Rating
Electro Static Discharge	IEC 61000-4-2	±4 kV contact, ±8 kV air
Power-Frequency Magnetic Field	IEC 61000-4-8	30A/m, 50Hz and 60Hz
Radio-Frequency EM-Field AM-modulated	IEC 61000-4-3	80MHz - 1000MHz, 10V/m, 80% AM @1kHz
Radio-Frequency EM-Field AM-modulated	IEC 61000-4-3	1.4GHz – 6GHz, 3V/m, 80% AM @1kHz

Emission (Residential level)

Description	Standard	Rating
Emission in SAC for 30MHz to 230MHz	IEC/CISPR 16	40dB(µV/m) QP @3m
Emission in SAC for 230MHz to 1000MHz	IEC/CISPR 16	47dB(µV/m) QP @3m
Emission in SAC for 1GHz to 3GHz	IEC/CISPR 16	70dB(µV/m) P, 50dB(µV/m) AP @3m
Emission in SAC for 3GHz to 6GHz	IEC/CISPR 16	74dB(µV/m) P, 54dB(µV/m) AP @3m

3 Hardware Interface Specifications

The interface connector is located at the side of the sensor opposite to the air inlet/outlet. Corresponding female plug is ZHR-5 from JST Sales America Inc. In Figure 1 a description of the pin layout is given.

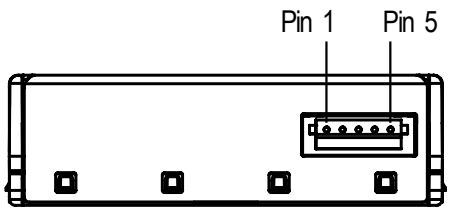

Figure 1: The communication interface connector is located at the side of the sensor opposite to the air outlet.

Pin	Name	Description	Comments
1	VDD	Supply voltage	5V ± 10%
2	RX	UART: Receiving pin for communication	TTL 5V and LVTTL 3.3V compatible
	SDA	I²C: Serial data input / output	
3	TX	UART: Transmitting pin for communication	TTL 5V and LVTTL 3.3V compatible
	SCL	I²C: Serial clock input	
4	SEL	Interface select	Leave floating to select UART
			Pull to GND to select I²C
5	GND	Ground	Housing on GND

Table 4 SPS30 pin assignment.

The SPS30 offers both a UART[7] and an I²C interface. For connection cables longer than 20 cm we recommend using the UART interface, due to its intrinsic robustness against electromagnetic interference.

Note, that there is an internal electrical connection between GND pin (5) and metal shielding. Keep this metal shielding electrically floating in order to avoid any unintended currents through this internal connection. If this is not an option, proper external potential equalization between GND pin and any potential connected to the shielding is mandatory. Any current though the connection between GND and metal shielding may damage the product and poses a safety risk through overheating.

[7] Universal Asynchronous Receiver Transmitter.

4 Functional Overview

4.1 Operating Modes

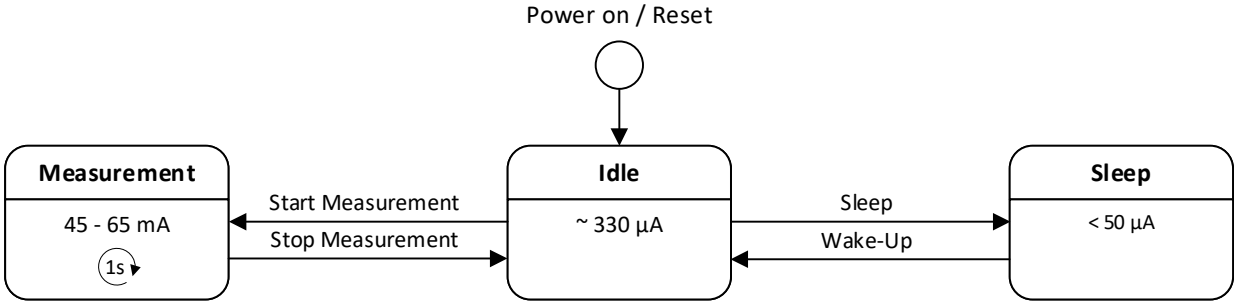

Idle

- After power on or reset the module is in Idle-Mode.
- Most of the internal electronics switched off /reduced power consumption.
- Fan and laser are switched off.
- The module is ready to receive and process any command.

Measurement

- The Measurement-Mode can only be entered from Idle-Mode.
- All electronics switched on / max. power consumption.
- The measurement is running and the module is continuously processing measurement data.
- New readings are available every second.

Sleep

- The Sleep-Mode can only be entered from Idle-Mode.
- Most of the internal electronics switched off / reduced power consumption.
- Fan and laser are switched off.
- Microcontroller is in Sleep-Mode.
- To minimize power consumption, the UART / I2C interface is also disabled.
- A wake-up sequence is needed to turn the module back on. See Wake-up command in the interface description.

4.2 Fan Auto Cleaning

When the module is in Measurement-Mode an automatic fan-cleaning procedure will be triggered periodically following a defined cleaning interval. This will accelerate the fan to maximum speed for 10 seconds in order to blow out the dust accumulated inside the fan.

- Measurement values are not updated while the fan-cleaning is running.
- The default cleaning interval is set to 604’800 seconds (i.e., 168 hours or 1 week) with a tolerance of ±3%.
- The interval can be configured using the Set Automatic Cleaning Interval command.
- Set the interval to 0 to disable the automatic cleaning.
- Once set, the interval is stored permanently in the non-volatile memory.
- If the sensor is switched off, the time counter is reset to 0. Make sure to trigger a cleaning cycle at least every week if the sensor is switched off and on periodically (e.g., once per day).
- The cleaning procedure can also be started manually with the Start Cleaning command.

4.3 Measurement Output Formats

The measurement results can be read with the "Read Measured Values" command. The returned data structure depends on the selected output format. The output format must be specified when stating the measurement with the "Start Measurement command".

IEEE754 float values

Byte #		Datatype	Description
SHDLC	I2C		
0..3	0..5	big-endian float IEEE754	Mass Concentration PM1.0 [µg/m³]
4..7	6..11		Mass Concentration PM2.5 [µg/m³]
8..11	12..17		Mass Concentration PM4.0 [µg/m³]
12..15	18..23		Mass Concentration PM10 [µg/m³]
16..19	24..29		Number Concentration PM0.5 [#/cm³]
20..23	30..35		Number Concentration PM1.0 [#/cm³]
24..27	36..41		Number Concentration PM2.5 [#/cm³]
28..31	42..47		Number Concentration PM4.0 [#/cm³]
32..35	48..53		Number Concentration PM10 [#/cm³]
36..39	54..59		Typical Particle Size[8] [µm]

Unsigned 16-bit integer values[9]

Byte #		Datatype	Description
SHDLC	I2C		
0..1	0..2	big-endian unsigned 16-bit integer	Mass Concentration PM1.0 [µg/m³]
2..3	3..5		Mass Concentration PM2.5 [µg/m³]
4..5	6..8		Mass Concentration PM4.0 [µg/m³]
6..7	9..11		Mass Concentration PM10 [µg/m³]
8..9	12..14		Number Concentration PM0.5 [#/cm³]
10..11	15..17		Number Concentration PM1.0 [#/cm³]
12..13	18..20		Number Concentration PM2.5 [#/cm³]
14..15	21..23		Number Concentration PM4.0 [#/cm³]
16..17	24..26		Number Concentration PM10 [#/cm³]
18..19	27..29		Typical Particle Size[8] [nm]

[8] The typical particle size (TPS) gives an indication on the average particle diameter in the sample aerosol. Such output correlates with the weighted average of the number concentration bins measured with a TSI 3330 optical particle sizer. Consequently, lighter aerosols will have smaller TPS values than heavier aerosols.

[9] Requires at least firmware version 2.0

4.4 Device Status Register

The Device Status Register is a 32-bit register that contains information about the internal state of the module.

31	30	29	28	27	26	25	24	23	22	21	20	19	18	17	16
										Warning					
res.	res.	res.	res.	res.	res.	res.	res.	res.	res.	SPEED	res.	res.	res.	res.	res.

15	14	13	12	11	10	9	8	7	6	5	4	3	2	1	0
										Error	Error				
res.	res.	res.	res.	res.	res.	res.	res.	res.	res.	LASER	FAN	res.	res.	res.	res.

Note: All “res.” bits are reserved for internal use or future versions. These bits can be both 0 and 1 and should therefore be ignored.

Bit 21 **SPEED:** Fan speed out of range

0: Fan speed is ok.
1: Fan speed is too high or too low.

- During the first 3 seconds after starting the measurement (fan start-up) the fan speed is not checked.
- The fan speed is also not checked during the auto cleaning procedure.
- Apart from the two exceptions mentioned above, the fan speed is checked once per second in the measurement mode. If it is out of range twice in succession, the SPEED-bit is set.
- At very high or low ambient temperatures, the fan may take longer to reach its target speed after start-up. In this case, the bit will be set. As soon as the target speed is reached, this bit is cleared automatically.
- If this bit is constantly set, this indicates a problem with the power supply or that the fan is no longer working properly.

Bit 5 **LASER:** Laser failure

0: Laser current is ok.
1: Laser is switched on and current is out of range.

- The laser current is checked once per second in the measurement mode. If it is out of range twice in succession, the LASER-bit is set.
- If the laser current is back within limits, this bit will be cleared automatically.
- A laser failure can occur at very high temperatures outside of specifications or when the laser module is defective.

Bit 4 **FAN:** Fan failure, fan is mechanically blocked or broken.

0: Fan works as expected.
1: Fan is switched on, but the measured fan speed is 0 RPM.

- The fan is checked once per second in the measurement mode. If 0 RPM is measured twice in succession, the FAN bit is set.
- The FAN-bit will not be cleared automatically.
- A fan failure can occur if the fan is mechanically blocked or broken.

5 Operation and Communication through the UART Interface

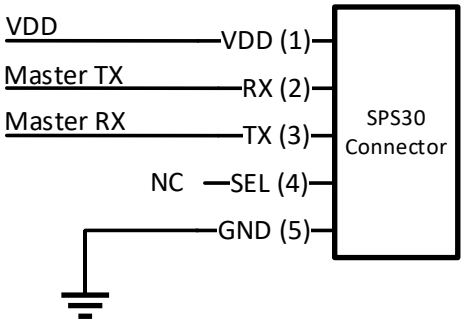

The following UART settings have to be used:

- Baud Rate: 115'200 bit/s
- Data Bits: 8
- Parity: None
- Stop Bit: 1

Figure 2: Typical UART application circuit.

5.1 Physical Layer

The SPS30 has separate RX and TX lines with unipolar logic levels. See **Figure 3**.

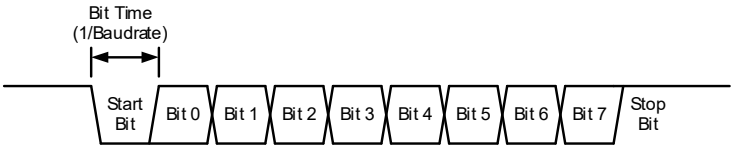

Figure 3: Transmitted byte.

5.2 SHDLC Frame Layer

On top of the UART interface, the SPS30 uses the very powerful and easy-to-implement SHDLC[10] protocol. It is a serial communication protocol based on a master/slave architecture. The SPS30 acts as the slave device.

Data is transferred in logical units called frames. Every transfer is initiated by the master sending a MOSI[11] frame. The slave will respond to the MOSI frame with a slave response, or MISO[12] frame. The two types of frames are shown in **Figure 4**.

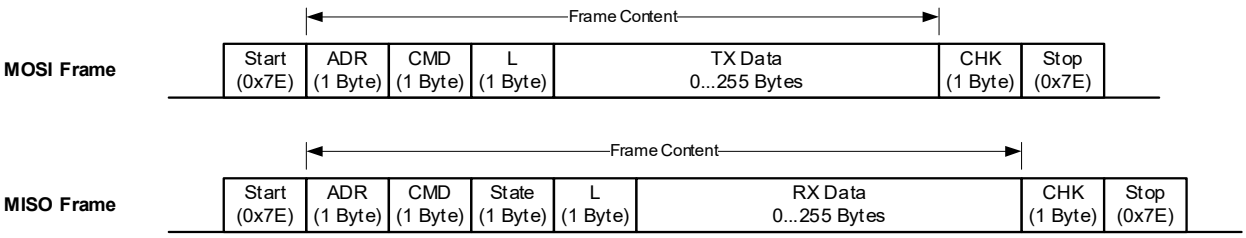

Figure 4: MOSI and MISO frames structure.

[10] Sensirion High-Level Data Link Control.

[11] Master Out Slave In. Frame direction from master to slave.

[12] Master In Slave Out. Frame direction from slave to master.

Start/Stop Byte and Byte-Stuffing

The 0x7E character is sent at the beginning and at the end of the frame to signalize frame start and stop. If this byte (0x7E) occurs anywhere else in the frame, it must be replaced by two other bytes (byte-stuffing). This also applies to the characters 0x7D, 0x11 and 0x13. Use **Table 5** for byte-stuffing.

Original data byte	Transferred data bytes
0x7E	0x7D, 0x5E
0x7D	0x7D, 0x5D
0x11	0x7D, 0x31
0x13	0x7D, 0x33

Table 5 Reference table for byte-stuffing.

Example: Data to send = [0x43, 0x11, 0x7F] → Data transmitted = [0x43, 0x7D, 0x31, 0x7F].

Address

The slave device address is always 0.

Command

In the MOSI frame the command tells the device what to do with the transmitted data. In the MISO frame, the slave just returns the received command.

Length

Length of the “TX Data” or “RX Data” field (before byte-stuffing).

State

The MISO frame contains a state byte, which allows the master to detect communication and execution errors.

b7	b6						b0
Error-Flag	Execution error code						

Figure 5: Status byte structure.

The first bit (b7) indicates that at least one of the error flags is set in the Device Status Register.

The “Execution error code” signalizes all errors which occur while processing the frame or executing the command. The following table shows the error codes which can be reported from the device. Note that some of these errors are system internal errors which require additional knowledge to be understood. In case of a problem, they will help Sensirion to localize and solve the issue.

Error Code		Meaning
dec	hex	
0	0x00	No error
1	0x01	Wrong data length for this command (too much or little data)
2	0x02	Unknown command
3	0x03	No access right for command
4	0x04	Illegal command parameter or parameter out of allowed range
40	0x28	Internal function argument out of range
67	0x43	Command not allowed in current state

Table 6 Reference table for error codes.

Data

The data has a usable size of [0…255] bytes (original data, before byte-stuffing). The meaning of the data content depends on the command.

Checksum

The checksum is built before byte-stuffing and checked after removing stuffed bytes from the frame. The checksum is defined as follows:

1. Sum all bytes between start and stop (without start and stop bytes).
2. Take the least significant byte of the result and invert it. This will be the checksum.

For a MOSI frame use Address, Command, Length and Data to calculate the checksum.
For a MISO frame use Address, Command, State, Length and Data to calculate the checksum.

Example (MOSI frame without start/stop and without byte-stuffing):

Adr	CMD	L	Tx Data 2 Bytes	CHK
0x00	0x00	0x02	0x01, 0x03	0xF9

The checksum is calculated as follows:

Adr	0x00
CMD	0x00
L	0x02
Data 0	0x01
Data 1	0x03
Sum	0x06
Least Significant Byte of Sum	0x06
Inverted (=Checksum)	**0xF9**

5.3 SHDLC Commands

The following table shows an overview of the available SHDLC commands.

CMD	Command	Read / Write / Execute	max. Response Time	min. required Firmware
0x00	Start Measurement	Execute	20 ms	V1.0
0x01	Stop Measurement	Execute	20 ms	V1.0
0x03	Read Measured Value	Read	20 ms	V1.0
0x10	Sleep	Execute	5 ms	V2.0
0x11	Wake-up	Execute	5 ms	V2.0
0x56	Start Fan Cleaning	Execute	20 ms	V1.0
0x80	Read/Write Auto Cleaning Interval	Read / Write	20 ms	V1.0
0xD0	Device Information	Read	20 ms	V1.0
0xD1	Read Version	Read	20 ms	V1.0
0xD2	Read Device Status Register	Read	20 ms	V2.2
0xD3	Reset	Execute	20 ms	V1.0

Table 7 Reference table for SHDLC commands.

5.3.1 Start Measurement (CMD: 0x00)

Starts the measurement[13]. After power up, the module is in Idle-Mode. Before any measurement values can be read, the Measurement-Mode needs to be started using this command.

MOSI Data:

Byte #	Datatype	Description
0	uint8	Subcommand, this value must be set to **0x01**
1	uint8	Measurement Output Format: **0x03**: Big-endian IEEE754 float values **0x05**: Big-endian unsigned 16-bit integer values

MISO Data: No data.

Example Frames:

MOSI	*Start measurement with output format "Big-endian IEEE754 float values":* **0x7E 0x00 0x00 0x02 0x01 0x03 0xF9 0x7E**
MISO	*Empty response frame:* **0x7E 0x00 0x00 0x00 0x00 0xFF 0x7E**

5.3.2 Stop Measurement (CMD: 0x01)

Stops the measurement[14]. Use this command to return to the initial state (Idle-Mode).

MOSI Data: No data.

MISO Data: No data.

Example Frames:

MOSI	**0x7E 0x00 0x01 0x00 0xFE 0x7E**
MISO	*Empty response frame:* **0x7E 0x00 0x01 0x00 0x00 0xFE 0x7E**

5.3.3 Read Measured Values (CMD: 0x03)

Reads the measured values from the module. This command can be used to poll for new measurement values. The measurement interval is 1 second.

MOSI Data: No data.

MISO Data:

If no new measurement values are available, the module returns an empty response frame.

If new measurement values are available, the response frame contains the measurement results. The data format depends on the selected output format, see 4.3 Measurement Output Formats.

Example Frames:

MOSI	**0x7E 0x00 0x03 0x00 0xFC 0x7E**

[13] This command can only be executed in Idle-Mode.

[14] This command can only be executed in Measurement-Mode.

MISO	*Empty response frame:* **0x7E 0x00 0x03 0x00 0x00 0xFC 0x7E** *Or response frame with new measurement values:* **0x7E 0x00 0x03 0x00 0x28 0x00 0x00 0x00 0x00 0x00 0x00 0x00 0x00 0x00 0x00** **0x00 0x00 0x00 0x00 0x00 0x00 0x00 0x00 0x00 0x00 0x00 0x00 0x00 0x00 0x00** **0x00 0x00 0x00 0x00 0x00 0x00 0x00 0x00 0x00 0x00 0x00 0x00 0x00 0x00 0x00** **0xD4 0x7E**

5.3.4 Sleep (CMD: 0x10)[15]

Enters the Sleep-Mode with minimum power consumption. This will also deactivate the UART interface, note the wake-up sequence described at the Wake-up command.

MOSI Data: No data.

MISO Data: No data.

Example Frames:

MOSI	**0x7E 0x00 0x10 0x00 0xEF 0x7E**
MISO	**0x7E 0x00 0x10 0x00 0x00 0xEF 0x7E**

5.3.5 Wake-up (CMD: 0x11)

Use this command to switch from Sleep-Mode to Idle-Mode. In Sleep-Mode the UART interface is disabled and must first be activated by sending a low pulse on the RX pin. This pulse is generated by sending a single byte with the value 0xFF.

If then a Wake-up command follows within 100ms, the module will switch on again and is ready for further commands in the Idle-Mode. If the low pulse is not followed by the Wake-up command, the microcontroller returns to Sleep-Mode after 100ms and the interface is deactivated again.

The Wake-up command can be sent directly after the 0xFF, without any delay. However, it is important that no other value than 0xFF is used to generate the low pulse, otherwise it's not guaranteed the UART interface synchronize correctly.

MOSI Data: No data.

MISO Data: No data.

Example Frames:

MOSI	*Send 0xFF to generate a low pulse in order to wake-up the interface:* **0xFF** *Wake-up command, within 100ms:* **0x7E 0x00 0x11 0x00 0xEE 0x7E**
MISO	**0x7E 0x00 0x11 0x00 0x00 0xEE 0x7E**

Alternatively, if the software implementation does not allow to send a single byte with the value 0xFF, the Wake-up command can be sent twice in succession. In this case the first Wake-up command is ignored, but causes the interface to be activated.

[15] This command can only be executed in Idle-Mode.

MOSI	*First Wake-up command (just, activates the interface):* **0x7E 0x00 0x11 0x00 0xEE 0x7E** *Second Wake-up command, within 100ms (this finally wakes up the module):* **0x7E 0x00 0x11 0x00 0xEE 0x7E**
MISO	**0x7E 0x00 0x11 0x00 0x00 0xEE 0x7E**

5.3.6 Start Fan Cleaning (CMD: 0x56)

Starts the fan-cleaning manually[16]. For more details, note the explanations given in 4.2 Fan Auto Cleaning.

MOSI Data: No data.

MISO Data: No data.

Example Frames:

MOSI	**0x7E 0x00 0x56 0x00 0xA9 0x7E**
MISO	**0x7E 0x00 0x56 0x00 0x00 0xA9 0x7E**

5.3.7 Read/Write Auto Cleaning Interval (CMD: 0x80)

Reads/Writes the interval [s] of the periodic fan-cleaning. For more details, note the explanations given in 4.2 Fan Auto Cleaning.

MOSI Data:

Read Auto Cleaning Interval:

Byte #	Datatype	Description
0	uint8	Subcommand, this value must be set to **0x00**

Write Auto Cleaning Interval:

Byte #	Datatype	Description
0	uint8	Subcommand, this value must be set to **0x00**
1..4	uint32	Interval in seconds as big-endian unsigned 32-bit integer value.

MISO Data:

Read Auto Cleaning Interval:

Byte #	Datatype	Description
0..3	uint32	Interval in seconds as big-endian unsigned 32-bit integer value.

Write Auto Cleaning Interval: No data.

Example Frames:

MOSI	*Read Auto Cleaning Interval:* **0x7E 0x00 0x80 0x01 0x00 0x7D 0x5E 0x7E** *Write Auto Cleaning Interval to 0 (disable):* **0x7E 0x00 0x80 0x05 0x00 0x00 0x00 0x00 0x00 0x7A 0x7E**
MISO	*Response frame for "Read Auto Cleaning Interval":* **0x7E 0x00 0x80 0x00 0x04 0x00 0x00 0x00 0x00 0x7B 0x7E** *Response frame for "Write Auto Cleaning Interval":* **0x7E 0x00 0x80 0x00 0x00 0x7F 0x7E**

[16] This command can only be executed in Measurement-Mode.

5.3.8 Device Information (CMD 0xD0)

This command returns the requested device information. It is defined as a string value with a maximum length of 32 ASCII characters (including terminating null character).

MOSI Data:

Byte #	Datatype	Description
0	uint8	This parameter defines which information is requested: **0x00**: Product Type **0x01**: Reserved **0x02**: Reserved **0x03**: Serial Number

MISO Data:

Byte #	Datatype	Description
0…n	string	Requested Device Information as null-terminated ASCII string. The size of the string is limited to 32 ASCII characters (including null character).

Example Frames:

Product Type:

Recommended to use as product identifier, returns always the string "00080000" on this product.

MOSI	`0x7E 0x00 0xD0 0x01 0x00 0x2E 0x7E`
MISO	`0x7E 0x00 0xD0 0x00 0x09 0x30 0x30 0x30 0x38 0x30 0x30 0x30 0x30 0x00 0x9B 0x7E`

Serial Number:

MOSI	`0x7E 0x00 0xD0 0x01 0x03 0x2B 0x7E`
MISO	`0x7E 0x00 0xD0 0x00 0x15 0x30 0x30 0x30 0x30 0x30 0x30 0x30 0x30 0x30 0x30 0x30 0x30 0x30 0x30 0x30 0x30 0x30 0x30 0x30 0x30 0x00 0x5A 0x7E`

5.3.9 Read Version (0xD1)

Gets version information about the firmware, hardware, and SHDLC protocol.

MOSI Data: No data.

MISO Data:

Byte #	Datatype	Description
0	uint8	Firmware major version
1	uint8	Firmware minor version[17]
2	uint8	Reserved: always 0
3	uint8	Hardware revision
4	uint8	Reserved: always 0
5	uint8	SHDLC protocol major version
6	uint8	SHDLC protocol minor version

[17] Firmware minor version may change without notice, given full backwards compatibility.

Example Frame:

MOSI	`0x7E 0x00 0xD1 0x00 0x2E 0x7E`
MISO	*Firmware V2.1, Hardware V6, SHDLC V2.0:* `0x7E 0x00 0xD1 0x01 0x07 0x02 0x01 0x00 0x06 0x00 0x02 0x00 0x1C 0x7E`

5.3.10 Read Device Status Register (0xD2)

Use this command to read the Device Status Register. For more details, note the explanations given in 4.4 Device Status Register.

Note: If one of the device status flags of type "Error" is set, this is also indicated in every SHDLC response frame by the Error-Flag in the state byte.

MOSI Data:

Byte #	Datatype	Description
0	uint8	0: Do not clear any bit in the Device Status Register after reading. 1: Clear all bits in the Device Status Register after reading.

MISO Data:

Byte #	Datatype	Description
0…3	big-endian, uint32	Device Status Register
4	uint8	Reserved for future use

Example Frame:

MOSI	`0x7E 0x00 0xD2 0x01 0x00 0x2C 0x7E`
MISO	`0x7E 0x00 0xD2 0x00 0x05 0x00 0x00 0x00 0x00 0x00 0x28 0x7E`

5.3.11 Device Reset (CMD: 0xD3)

Soft reset command. After calling this command, the module is in the same state as after a Power-Reset. The reset is executed after sending the MISO response frame.

Note: To perform a reset when the sensor is in sleep mode, it is required to send first a wake-up sequence to activate the interface.

MOSI Data: No data.

MISO Data: No data.

Example Frames:

MOSI	`0x7E 0x00 0xD3 0x00 0x2C 0x7E`
MISO	`0x7E 0x00 0xD3 0x00 0x00 0x2C 0x7E`

6 Operation and Communication through the I²C Interface

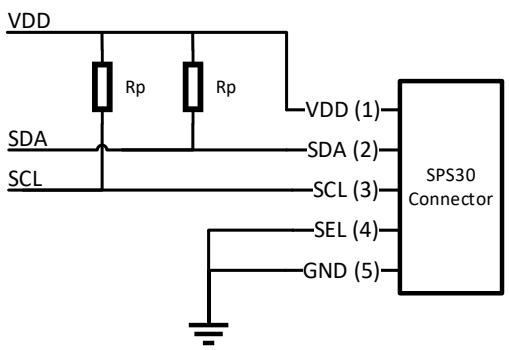

Figure 6: Typical I²C application circuit.

Usage:

- I²C address: 0x69
- Max. speed: standard mode, 100 kbit/s
- Clock stretching: not used

Both SCL and SDA lines are open drain I/Os. They should be connected to external pull-up resistors (e.g. Rp = 10 kΩ). **Important notice:** in order to correctly select I²C as interface, the interface select (SEL) pin must be pulled to GND before or at the same time the sensor is powered up.

Some considerations should be made about the use of the I²C interface. I²C was originally designed to connect two chips on a PCB. When the sensor is connected to the main PCB via a cable, particular attention must be paid to electromagnetic interference and crosstalk. Use as short as possible (< 10 cm) and/or well shielded connection cables. We recommend using the UART interface instead, whenever possible: it is more robust against electromagnetic interference, especially with long connection cables.

For detailed information on the I2C protocol, refer to NXP I2C-bus specification[18].

6.1 Transfer Types

Set Pointer

Sets the 16-bit address pointer without writing data to the sensor module. It is used to execute commands, which do not require additional parameters.

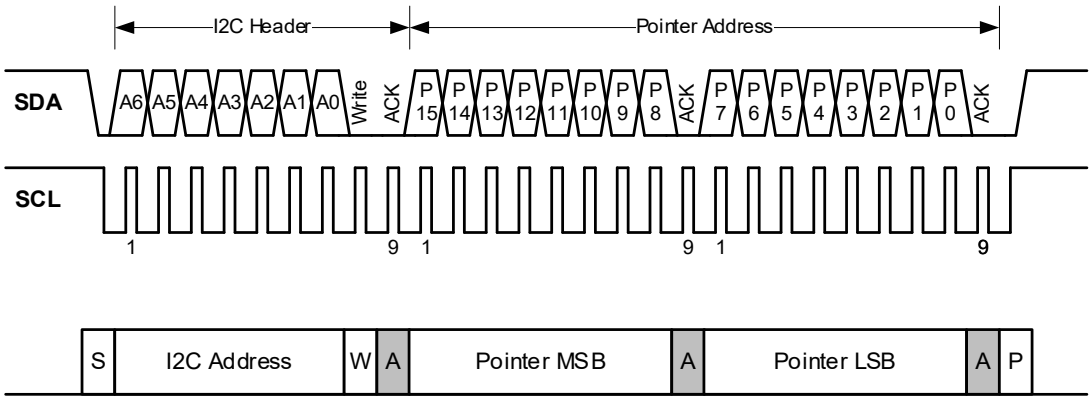

[18] http://www.nxp.com/documents/user_manual/UM10204.pdf

Set Pointer & Read Data

Sets the 16-bit address pointer and read data from sensor module. It is used to read sensor module information or measurement results. The data is ready to read immediately after the address pointer is set. The sensor module transmits the data in 2-byte packets, which are protected with a checksum.

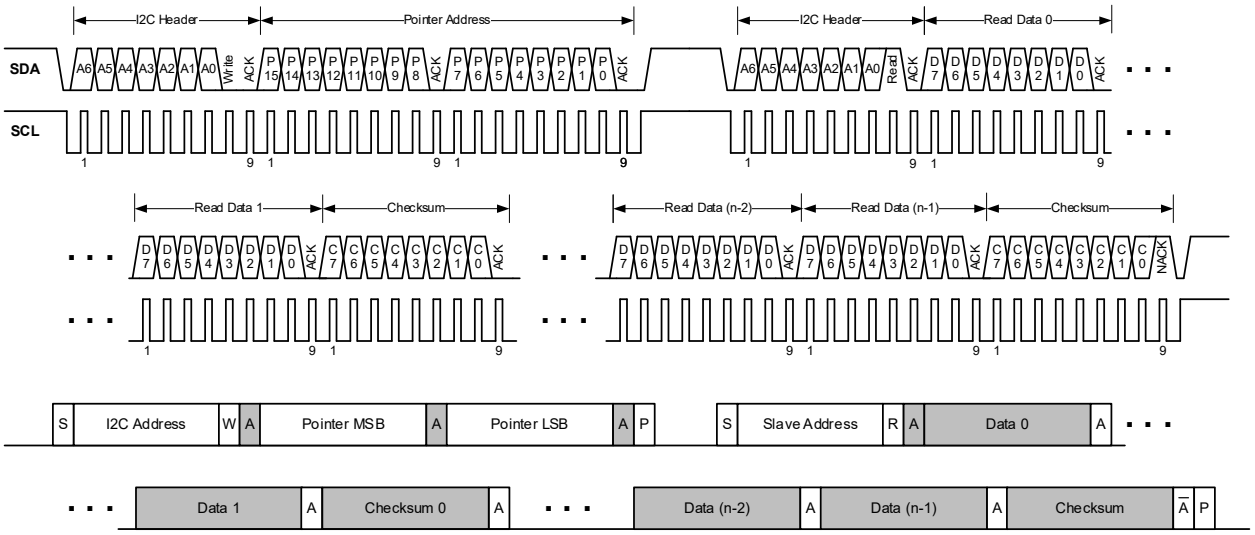

It is allowed to read several times in succession without setting the address pointer again. This reduces the protocol overhead for periodical reading of the measured values.

Set Pointer & Write Data

Sets the 16-bit address pointer and writes data to the sensor module. It is used to execute commands, which require additional parameters. The data must be transmitted in 2-byte packets which are protected by a checksum.

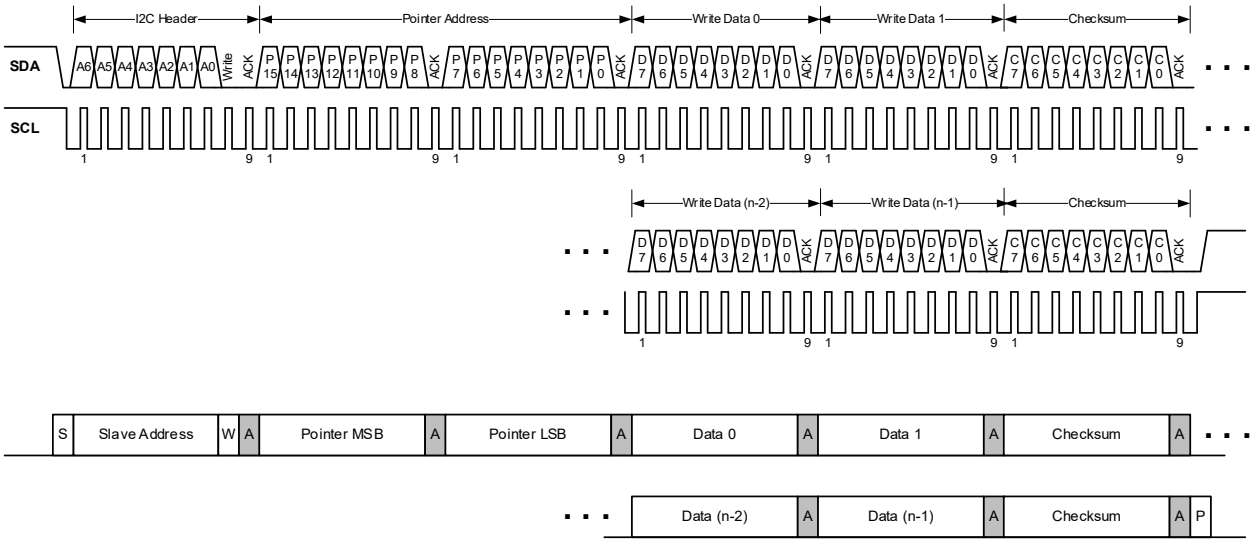

6.2 Checksum Calculation

The Read and Write Commands transmit the data in 2-byte packets, followed by an 8-bit checksum. The checksum is calculated as follows:

Property	Value
Name	CRC-8
Protected Data	read and/or write data
Width	8 bit
Polynomial	0x31 (x^8 + x^5 + x^4 + 1)
Initialization	0xFF
Reflect Input	false
Reflect Output	false
Final XOR	0x00
Example	CRC(0xBEEF) = 0x92

```
uint8_t CalcCrc(uint8_t data[2]) {
  uint8_t crc = 0xFF;
  for(int i = 0; i < 2; i++) {
    crc ^= data[i];
    for(uint8_t bit = 8; bit > 0; --bit) {
      if(crc & 0x80) {
        crc = (crc << 1) ^ 0x31u;
      } else {
        crc = (crc << 1);
      }
    }
  }
  return crc;
}
```

Please note that the checksums are used only for the 2-byte data packets. The command code itself already contains a 3-bit CRC and therefore no checksum must be appended to it.

6.3 I2C Commands

The following table shows an overview of the available I²C commands.

Address Pointer	Command Name	Transfer Type	Parameter length including CRC [bytes]	Response length including CRC [bytes]	Command execution time	min. required Firmware
0x0010	Start Measurement	Set Pointer & Write Data	3	-	< 20 ms	V1.0
0x0104	Stop Measurement	Set Pointer	-	-	< 20 ms	V1.0
0x0202	Read Data-Ready Flag	Set Pointer & Read Data	-	3	-	V1.0
0x0300	Read Measured Values	Set Pointer & Read Data	-	float: 60 integer: 30	-	V1.0
0x1001	Sleep	Set Pointer	-	-	< 5 ms	V2.0
0x1103	Wake-up	Set Pointer	-	-	< 5 ms	V2.0
0x5607	Start Fan Cleaning	Set Pointer	-	-	< 5 ms	V1.0
0x8004	Read/Write Auto Cleaning Interval	Set Pointer & Read/Write Data	read: - write: 6	read: 6 write: -	read: < 5 ms write: < 20 ms	V1.0
					read: - write: < 20ms	V2.2
0xD002	Read Product Type	Set Pointer & Read Data	-	12		
0xD033	Read Serial Number	Set Pointer & Read Data	-	max. 48	-	V1.0
0xD100	Read Version	Set Pointer & Read Data	-	3	-	V1.0
0xD206	Read Device Status Register	Set Pointer & Read Data	-	6	-	V2.2
0xD210	Clear Device Status Register	Set Pointer	-	-	< 5 ms	V2.0
0xD304	Reset	Set Pointer	-	-	< 100 ms	V1.0

Table 8 Reference table for I²C commands.

6.3.1 Start Measurement (0x0010)

Starts the measurement. After power up, the module is in Idle-Mode. Before any measurement values can be read, the Measurement-Mode needs to be started using this command.

Transfer Type: **Set Pointer & Write Data**
Pointer Address: **0x0010**

Write Data:

Byte #	Description
0	**Measurement Output Format** **0x03**: Big-endian IEEE754 float values **0x05**: Big-endian unsigned 16-bit integer values
1	dummy byte, insert 0x00
2	Checksum for bytes 0, 1

6.3.2 Stop Measurement (0x0104)

Stops the measurement. Use this command to return to the Idle-Mode.

Transfer Type: **Set Pointer**
Pointer Address: **0x0104**

6.3.3 Read Data-Ready Flag (0x0202)

This command can be used for polling to find out when new measurements are available. The pointer address only has to be set once. Repeated read requests get the status of the Data-Ready Flag.

Transfer Type: **Set Pointer & Read Data**
Pointer Address: **0x0202**

Read Data:

Byte #	Description
0	unused, always 0x00
1	**Data-Ready Flag** 0x00: no new measurements available 0x01: new measurements ready to read
2	Checksum for bytes 0, 1

6.3.4 Read Measured Values (0x0300)

Reads the measured values from the sensor module and resets the “Data-Ready Flag”. If the sensor module is in Measurement-Mode, an updated measurement value is provided every second and the “Data-Ready Flag” is set. If no synchronized readout is desired, the “Data-Ready Flag” can be ignored. The command “Read Measured Values” always returns the latest measured values.

Transfer Type: **Set Pointer & Read Data**
Pointer Address: **0x0300**

The data format depends on the selected output format, see 4.3 Measurement Output Formats. Note that after every two bytes, the checksum of the previous two bytes is transferred.

Example Data Structure:

Byte #	Description
0, 1	two bytes of measurement data
2	checksum for bytes 0, 1
3, 4	two bytes of measurement data
5	checksum for bytes 3, 4
…	…

6.3.5 Sleep (0x1001)[19]

Enters the Sleep-Mode with minimum power consumption. This will also deactivate the I2C interface, note the wake-up sequence described at the Wake-up command.

Transfer Type: **Set Pointer**
Pointer Address: **0x1001**

6.3.6 Wake-Up (0x1103)

Use this command to switch from Sleep-Mode to Idle-Mode. In Sleep-Mode the I2C interface is disabled and must first be activated by sending a low pulse on the SDA line. A low pulse can be generated by sending a I2C-Start-Condition followed by a Stop-Condition.

If then a Wake-up command follows within 100ms, the module will switch on again and is ready for further commands in the Idle-Mode. If the low pulse is not followed by the Wake-up command, the microcontroller returns after 100ms to Sleep-Mode and the interface is deactivated again.

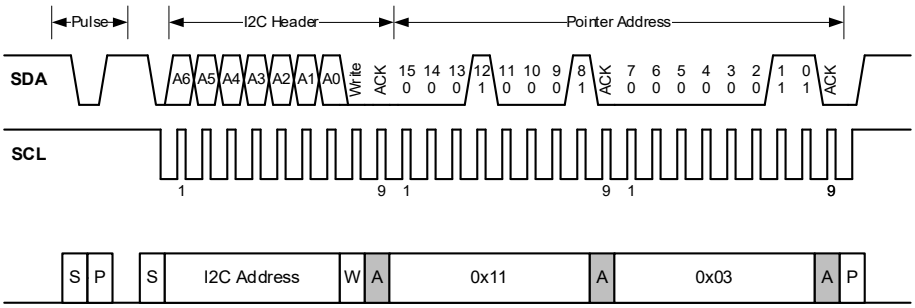

Alternatively, if the software implementation does not allow to send a I2C-Start-Condition followed by a Stop-Condition, the Wake-up command can be sent twice in succession. In this case the first Wake-up command is ignored, but causes the interface to be activated.

Transfer Type: **2x Set Pointer**
Pointer Address: **0x1103**

6.3.7 Start Fan Cleaning (0x5607)[20]

Starts the fan-cleaning manually. For more details, note the explanations given in 4.2 Fan Auto Cleaning.

Transfer Type: **Set Pointer**
Pointer Address: **0x5607**

[19] This command can only be executed in Idle-Mode.
[20] This command can only be executed in Measurement-Mode.

6.3.8 Read/Write Auto Cleaning Interval (0x8004)

Reads/Writes the interval [s] of the periodic fan-cleaning. For more details, note the explanations given in 4.2 Fan Auto Cleaning.

Note for FW Version < 2.2: After writing a new interval, this will be activated immediately. However, if the interval register is read out after setting the new value, the previous value is returned until the next start/reset of the sensor module.

Transfer Type: **Set Pointer & Read/Write Data**
Pointer Address: **0x8004**

Read/Write Data:

Byte #	Description	
0, 1	Most Significant Byte	big-endian, unsigned 32-bit integer value: **Auto Cleaning Interval [s]**
2	Checksum for bytes 0, 1	
3, 4	Least Significant Byte	
5	Checksum for bytes 3, 4	

6.3.9 Read Device Information (0xD002, 0xD033)

This command returns the requested device information. It is defined as a string value with a maximum length of 32 ASCII characters (including terminating null-character).

Transfer Type: **Set Pointer & Read Data**
Pointer Address: **Product Type:** **0xD002** (always "00080000" without terminating null-character, recommended to use as product identifier)
Serial Number: **0xD033**

Read Data:

Byte #	Description
0	ASCII Character 0
1	ASCII Character 1
2	Checksum for bytes 0, 1
…	…
45	ASCII Character 30
46	ASCII Character 31
47	Checksum for bytes 45, 46

6.3.10 Read Firmware Version (0xD100)

Gets firmware major.minor version.

Transfer Type: **Set Pointer & Read Data**
Pointer Address: **0xD100**

Read Data:

Byte #	Description
0	Firmware major version
1	Firmware minor version[21]
2	Checksum for bytes 0, 1

[21] Firmware minor version may change without notice, given full backwards compatibility.

6.3.11 Read Device Status Register (0xD206)

Use this command to read the Device Status Register. For more details, note the explanations given in 4.4.

Transfer Type: **Set Pointer & Read Data**
Pointer Address: **0xD206**

Read Data:

Byte #	Description	
0, 1	Most Significant Byte	big-endian, unsigned 32-bit integer value: **Device Status Register**
2	Checksum for bytes 0, 1	
3, 4	Least Significant Byte	
5	Checksum for bytes 3, 4	

6.3.12 Clear Device Status Register (0xD210)

Clears the device status register. For more details, note the explanations given in 4.4.

Transfer Type: **Set Pointer**
Pointer Address: **0xD210**

6.3.13 Device Reset (0xD304)

Device software reset command. After calling this command, the module is in the same state as after a power reset.

Note: To perform a reset when the sensor is in sleep mode, it is required to send first a wake-up sequence to activate the interface.

Transfer Type: **Set Pointer**
Pointer Address: **0xD304**

7 Mechanical Specifications

7.1 Product Outline Drawings

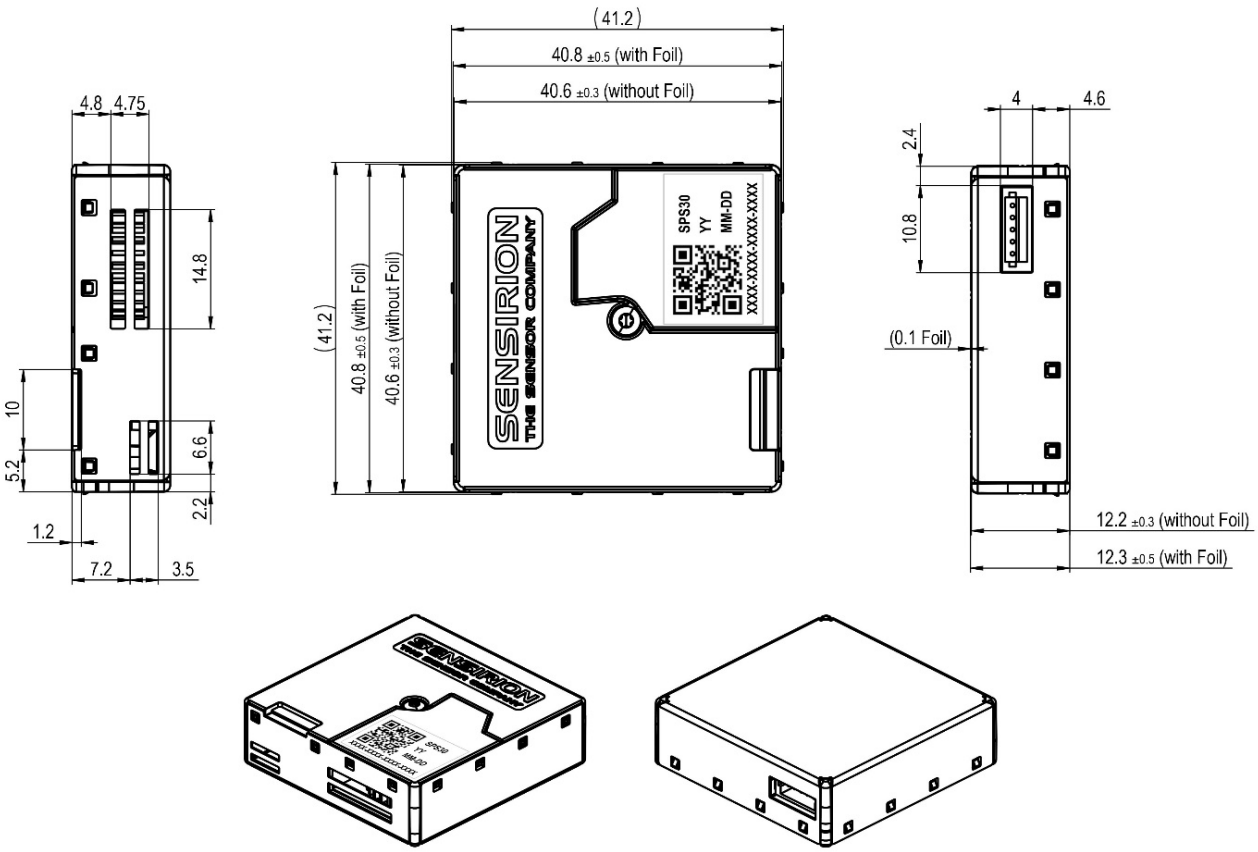

General tolerances: ISO 2768-mK

Figure 7: Package outline dimensions of the SPS30 from different views. Tolerances included. All lengths are given in mm. Dimensions in brackets include plastic fixation elements.

7.2 Label

The SPS30 has a label on one side of the sensor. The label contains information about

- Sensirion product name
- Production year
- Production date (month - day)
- Serial number (XXXX-XXXX-XXXX-XXXX)
- QR-code containing the information above

Figure 8: Label on SPS30

8 Shipping Package

The SPS30 is shipped in stackable trays with 56 pieces each. Non-packaged tray dimensions are given in Figure 9. Packaged tray dimensions are 670 mm x 460 mm x 45 mm. The weight of each full packaged tray (including sensors) is 2.4 kg.

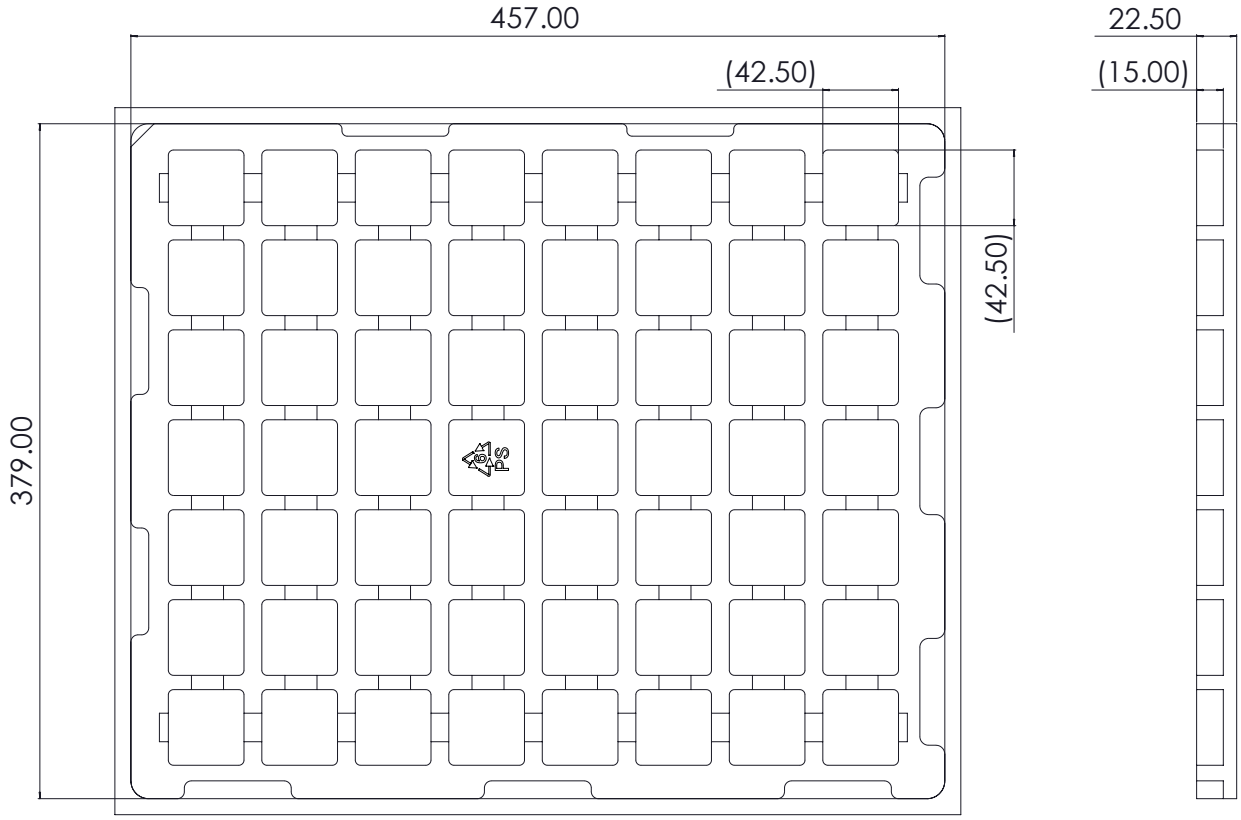

Figure 9: 56-sensor tray dimensions (in mm).

9 Ordering Information

The SPS30 and its evaluation kit can be ordered via the article numbers listed in Table 9.

Product	Description	Article Number
SPS30 sensor	Particulate Matter Sensor	1-101638-10
SEK-SPS30 evaluation kit	SPS30 sensor and USB evaluation kit	3.000.119

Table 9: SPS30 and evaluation kit ordering information.

10 Revision History

Date	Version	Page(s)	Changes
27. March 2020	1.0	All	Initial version

11 Important Notices

11.1 Warning, Personal Injury

Do not use this product as safety or emergency stop devices or in any other application where failure of the product could result in personal injury. Do not use this product for applications other than its intended and authorized use. Before installing, handling, using or servicing this product, please consult the data sheet and application notes. Failure to comply with these instructions could result in death or serious injury.

If the Buyer shall purchase or use SENSIRION products for any unintended or unauthorized application, Buyer shall defend, indemnify and hold harmless SENSIRION and its officers, employees, subsidiaries, affiliates and distributors against all claims, costs, damages and expenses, and reasonable attorney fees arising out of, directly or indirectly, any claim of personal injury or death associated with such unintended or unauthorized use, even if SENSIRION shall be allegedly negligent with respect to the design or the manufacture of the product.

11.2 ESD Precautions

The inherent design of this component causes it to be sensitive to electrostatic discharge (ESD). To prevent ESD-induced damage and/or degradation, take customary and statutory ESD precautions when handling this product.
See application note "ESD, Latchup and EMC" for more information.

11.3 Warranty

SENSIRION warrants solely to the original purchaser of this product for a period of 12 months (one year) from the date of delivery that this product shall be of the quality, material and workmanship defined in SENSIRION's published specifications of the product. Within such period, if proven to be defective, SENSIRION shall repair and/or replace this product, in SENSIRION's discretion, free of charge to the Buyer, provided that:

- notice in writing describing the defects shall be given to SENSIRION within fourteen (14) days after their appearance;
- such defects shall be found, to SENSIRION's reasonable satisfaction, to have arisen from SENSIRION's faulty design, material, or workmanship;
- the defective product shall be returned to SENSIRION's factory at the Buyer's expense; and
- the warranty period for any repaired or replaced product shall be limited to the unexpired portion of the original period.

This warranty does not apply to any equipment which has not been installed and used within the specifications recommended by SENSIRION for the intended and proper use of the equipment. EXCEPT FOR THE WARRANTIES EXPRESSLY SET FORTH HEREIN, SENSIRION MAKES NO WARRANTIES, EITHER EXPRESS OR IMPLIED, WITH RESPECT TO THE PRODUCT. ANY AND ALL WARRANTIES, INCLUDING WITHOUT LIMITATION, WARRANTIES OF MERCHANTABILITY OR FITNESS FOR A PARTICULAR PURPOSE, ARE EXPRESSLY EXCLUDED AND DECLINED.
SENSIRION is only liable for defects of this product arising under the conditions of operation provided for in the data sheet and proper use of the goods. SENSIRION explicitly disclaims all warranties, express or implied, for any period during which the goods are operated or stored not in accordance with the technical specifications.
SENSIRION does not assume any liability arising out of any application or use of any product or circuit and specifically disclaims any and all liability, including without limitation consequential or incidental damages. All operating parameters, including without limitation recommended parameters, must be validated for each customer's applications by customer's technical experts. Recommended parameters can and do vary in different applications.
SENSIRION reserves the right, without further notice, (i) to change the product specifications and/or the information in this document and (ii) to improve reliability, functions and design of this product.

11.4 RoHS, REACH and WEEE Statement

The SPS30 complies with requirements of the following directives and regulations:

- Directive 2011/65/EU of the European Parliament and of the Council of 08.06.2011 on the restriction of the use of certain hazardous substances in electrical and electronic equipment (RoHS); OJ L 174, 01.07.2011, p. 88.
- Regulation 2006/1907/EC of the European Parliament and of the Council of 18.12.2006 on the Registration, Evaluation, Authorisation and Restriction of Chemicals (REACH); OJ L 396, 30.12.2006, p.1.
- EU Directive 2002/96/EC on waste electrical and electronic equipment (WEEE), OJ13.02.2003; esp. its Article 6 (1) with Annex II.

Copyright© 2020, by SENSIRION.
CMOSens® is a trademark of Sensirion
All rights reserved

12 Headquarters and Subsidiaries

Sensirion AG
Laubisruetistr. 50
CH-8712 Staefa ZH
Switzerland

phone: +41 44 306 40 00
fax: +41 44 306 40 30
info@sensirion.com
www.sensirion.com

Sensirion Taiwan Co. Ltd
phone: +886 3 5506701
info@sensirion.com
www.sensirion.com

Sensirion Inc., USA
phone: +1 312 690 5858
info-us@sensirion.com
www.sensirion.com

Sensirion Japan Co. Ltd.
phone: +81 3 3444 4940
info-jp@sensirion.com
www.sensirion.co.jp

Sensirion Korea Co. Ltd.
phone: +82 31 337 7700~3
info-kr@sensirion.com
www.sensirion.co.kr

Sensirion China Co. Ltd.
phone: +86 755 8252 1501
info-cn@sensirion.com
www.sensirion.com.cn

To find your local representative, please visit www.sensirion.com/distributors