BOSSARD
Proven Productivity

At your service in the field of fastening technology

The company headquartered in Zug, Switzerland, is among the market leaders in fastening technology in Europe, the Americas and Asia-Pacific. Bossard is a global network of companies with **2'500 employees in 77 locations** and carefully selected international partners in all regions of the world.

Our drive for excellence and innovation has led to steady growth and market success for more than 185 years.

The core competences are:

Product Solutions – the full range of fastening products such as screws, nuts, bolts, woodscrews, washers, pins and much more.

Assembly Technology Expert and consulting services to optimize your production and assembly processes

Smart Factory Logistics solutions to free you from C-parts management

For any questions, get in contact with us!

www.bossard.com

BOSSARD
Proven Productivity

BN 20239 3370849 slotted cheese head screw M4x8

Slotted cheese head machine screws (DIN 84 A, ~ISO 1207), 4.8, zinc plated with thicklayer passivation

3D View

Zoom

Moves you toward or away from objects in the scene when you drag vertically. You can also zoom with the hand tool by holding down Shift as you drag.

Pan

Moves the model vertically and horizontally only. You can also pan with the hand tool: Ctrl-drag.

Rotate

Turns 3D objects around relative to the screen. How the objects move depends on the starting view, where you start dragging and the direction in which you drag.

2D derivation

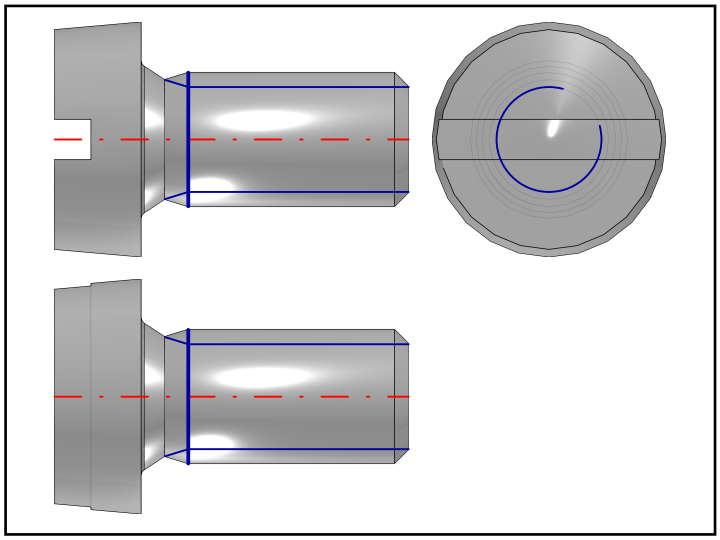

ISO View

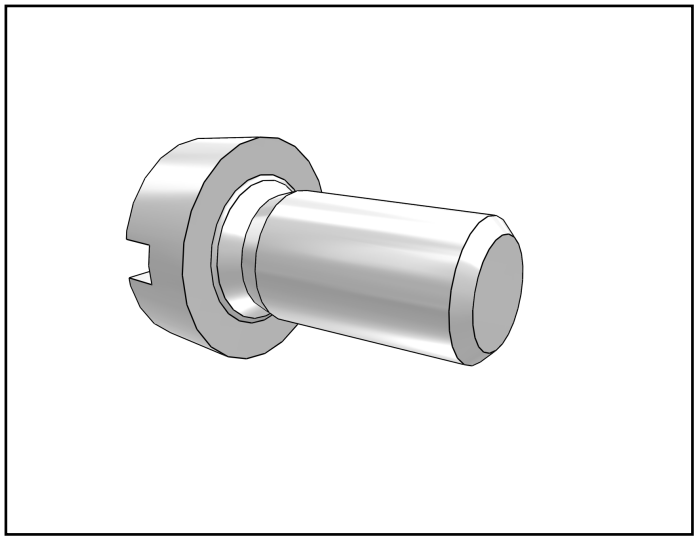

RoHS 2011/65/EU

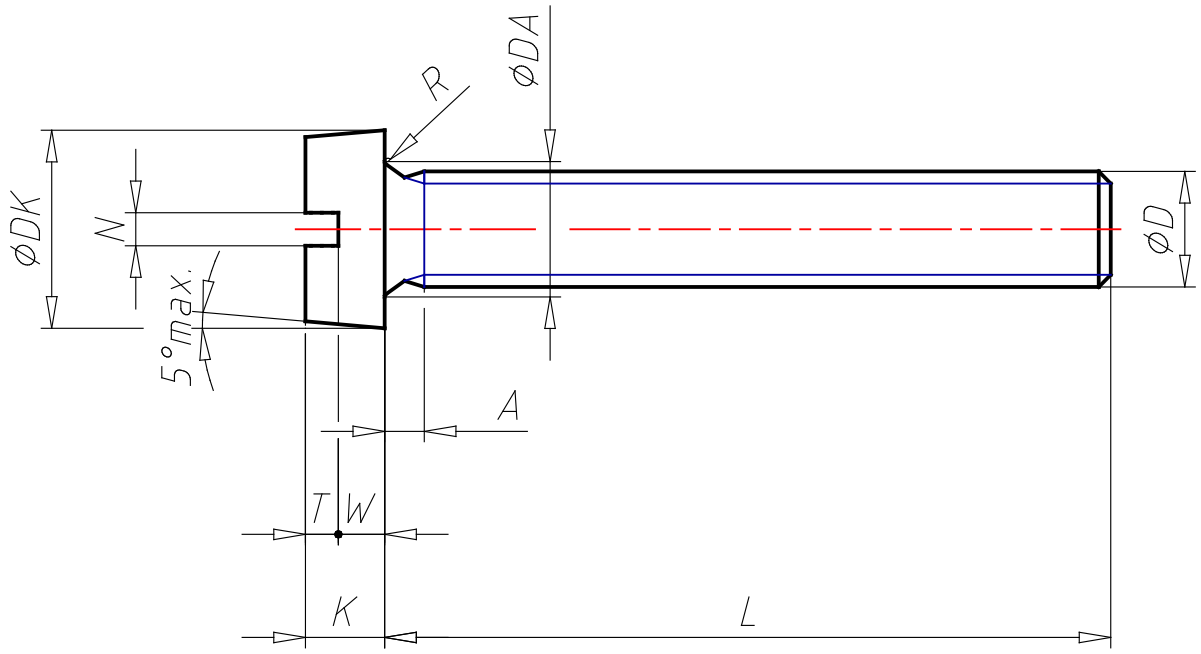

	BN 20239 3370849 slotted cheese head screw M4x8		
	Slotted cheese head machine screws (DIN 84 A, ~ISO 1207), 4.8, zinc plated with thicklayer passivation		
Version Index	Modification Aenderung	Date Datum	Changed Geaendert

Comment Bemerkung	–		
Specifications and reference standards Technische Lieferbedingungen und Bezugsnormen	–	Material Werkstoff	–
Tolerances Toleranzen	–	Surface Oberflaeche	–
Substitute for Ersatz fuer	–	Title Benennung	–
Replaced by Ersetzt durch	–		
Drawn Gezeichnet	– –		
Checked Geprueft	– –	Drawing no. Zeichnungs-Nr.	–
Approved Freigabe	– –		

BOSSARD

Dimensions Dimensionen mm	
Revision Index –	Scale Massstab %

© For this drawing we reserve all rights. Without our permission it may neither be copied nor made accessible to third persons.

© Diese Zeichnung darf ohne unsere schriftliche Genehmigung weder vervielfältigt noch Drittpersonen zugänglich gemacht werden.

BOSSARD
Proven Productivity

BN 20239 3370849 slotted cheese head screw M4x8

Slotted cheese head machine screws (DIN 84 A, ~ISO 1207), 4.8, zinc plated with thicklayer passivation

Technical Data

BNARTNR (Identification)	3370849
BNNORM1 ()	DIN 84 A
BNNORM2 ()	~ISO 1207
BNMAT (Material)	Steel 4.8
BNSURFACE (Surface)	zinc plated with thicklayer passivation
D (Nominal thread diameter / mm)	4
D3 (Thread core diameter / mm)	3.141
P (Threaded pitch / mm)	0.7
L (Nominal length / mm)	8
A (Distance from the last full form thread to the bearing face / mm)	1.4
B (Thread length / mm)	6.6
DK (Head diameter / mm)	7
DA (max. / mm)	4.7
K (Head height / mm)	2.6
N (Width of slot / mm)	1.2
R (Transition radius under head / mm)	0.2
T (Depth of the driving feature min. / mm)	1.1
W (min. / mm)	1
X (max. / mm)	1.75

BN 20239 3370849 slotted cheese head screw M4x8

Slotted cheese head machine screws (DIN 84 A, ~ISO 1207), 4.8, zinc plated with thicklayer passivation

Bill of Materials

N°	Description	Amount
1.1	BN 20239 3370849 slotted cheese head screw M4x8	1

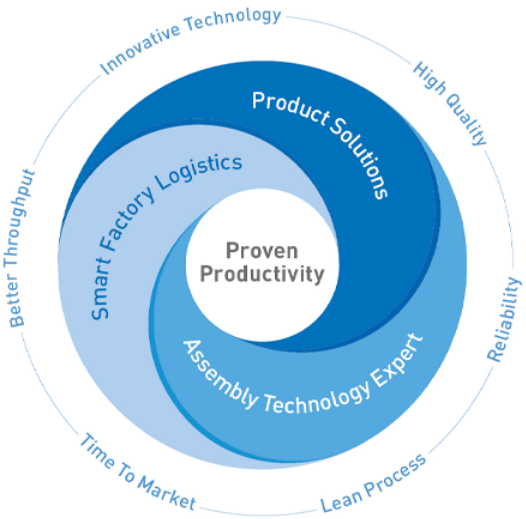

From the perspective of our customers, the interplay has six core benefits within the perspectives of Product Solutions, Assembly Technology Expert and Smart Factory Loistics:

1. Time to market:
   This means that our customers' products are brought to market faster – a crucial competitive advantage in a global environment where speed counts.

2. Lean process:
   For our customers, this means saving time, money and resources, being able to better calculate total costs – and above all, achieving higher margins.

3. Better throughput:
   This is one of the central cost aspects for our customers when it comes to boosting effectiveness – and especially improving efficiency.

4. High quality:
   For our customers, this means absolute reliability in terms of product, process and production safety – and hence, less waste and fewer complaints.

5. Innovative technology:
   From a customer's perspective this is crucial. Only companies open to new developments are ready to successfully forge new paths and go where no other competitor has gone before.

6. Maximum reliability:
   For our loyal customers, this means knowing that they can rely on us and our long-time employees with the utmost confidence – not just now, but decades down the line.