# Gas burner safty control

## INTRODUCTION

The MMI 810.1 Mod 40-34 gas burner safety control is suitable for fully automatic forced and inducqd draught gas burners. It caters for burners with an intermittent pilot system (expanding flame), and those with interrupted pilot systems.
The control box provides a safe light-up and shut-down sequence for the burner and incorporates pre-purge, ignition and ignition safety time intervals, start or pilot flame and main flame stages.
The control is suitable for use on flame rectification detection only. It is certificated for use by most European Gas Authorities, and for precise approval details, see under, Technical Specification‘ the model numbers which apply in various countries.

## FEATURES

1. The control box has a working ambient temperature rating of up to 60° C.
2. The timing sequence is accurately controlled by a synchronous motor driving a cam switch assembly. This produces a consistent performance despite variations in the supply voltage.
3. The control box automatically checks the air pressure proving switch in both the „no air“ and „air supply proved“ positions.
4. A coloured programme indicator is incorporated, to show the position reached by the control at any state in the sequence. This allows easier diagnosis when fault finding.
5. The main relay operates on d.c. to assist noiseless operation with variations in the supply voltage. The electronic and electrical components are incor- porated onto two plug-in printed circuit boards. Power to the external circuits, eg. gas valves, ignition system etc, is carried by ‚point-to-point‘ internal wiring.
6. 6. A start interlock circuit is provided, see under „Ope-ration“, and fig. 3.
7. The wiring base and control box have a positive plug-in arrangement, making it impossible to achieve an incorrect connection between the two parts.
8. Extra terminals for neutral and earth connections are supplied in the wiring base, in all 3 for neutral, 3 for earth.
9. The control box is arranged such that it will largely ignore the effects of ignition spark interference upon the flame signal.




## CONSTRUCTION

### Control Box and Base

The control box is housed in a tough transparent plastic cover, so that the working parts are easily seen. The plastic material used for the cover is of the self-extinguishing type. Inside, a synchronous motor and cam switch assembly provide the timing sequence. The electronic flame detection amplifier and electrical components are mounted onto two plug-in printed circuit boards, whilst power to the external circuits e.g. gas valves, ignition system etc, is carried through conventional ‚point-to-point‘ wiring.
Manual reset from the lockout position is provided by a push button on top of the control and a lockout signal lamp is incorporated underneath this button. A single screw through the control box locks it onto the wiring base.
The wiring base is a robust plastic moulding, allowing adequate room when connecting up to the external wiring terminals supplied for live, neutral, burner motor, ignition etc.
A variety of cable entry points to the base is provided in the form of 4 easy knockout holes at the base ends and the underside. The base end holes are for PG11 screwed electrical fittings.
In addition a detachable cable entry plate is supplied which allows for either further screwed cable entry or simple entries for p.v.c. type wiring.

### Flame Ionisation Probe

This is not supplied as part of the control system. A flame electrode with good heat resisting properties and well insulated should be used for this. The flame electrode should therefore be similar to a good ignition electrode.

0708.22-01-e/12/98



ПРОМЭЛЕКТРОНИКА / sales@prom-elec.com

**Failure to establish Flame**

If flame is not established or detected during the light-up sequence, the control box goes to lockout shutting down the burner within 5 seconds from the initial switching on of the start gas valve. Similarly, if the main flame is not established or detected after the pilot valve has been switched off, the control box goes to lockout.
The lockout signal lamp behind the reset button is illuminated, and the burner cannot be restarted until the reset button is pressed.
Reset can be effected immediately following a lockout and a full light-up sequence begins.

**Running Flame Failure**

If during a run, the gas flame is extinguished, the flame detection system reacts instantly to the loss of flame. The gas valve circuits are switched off within 1 second and the control box goes to lockout shutting down the burner completely. See also under „Summary of Safety Features“.

**INTERNAL & EXTERNAL WIRING DIAGRAM** Fig.1

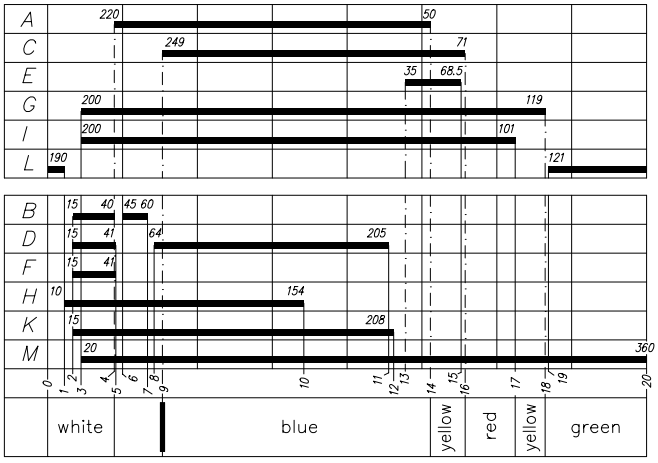


**COLOURED PROGRAMME INDICATOR**

A coloured programme indicator is incorporated on the cam assembly, and the approximate colour positions indicate the following steps in the sequence.

| | |
|---|---|
| Blue line on White | – Start position |
| Start of Blue sector | – Start of pre-purge |
| Red line in Blue sector | – Air supply proved. See under fault finding note 3 |
| Blue sector | – Pre-purge |
| End of Blue | – End of pre-purge |
| End of Blue/Start of Yellow | – Start of ignition safety time, and initial fuel release |
| End of Yellow/Start of Red | – Lockout position, due to ignition or detection failure |
| Red sector | – Start/Pilot flame proving period |
| End of Red/Start of Yellow | – Main flame establishment period |
| End of Yellow/Start of Green | – End of main flame establishment time |
| End of Green/Start of White | – „Run“ position |

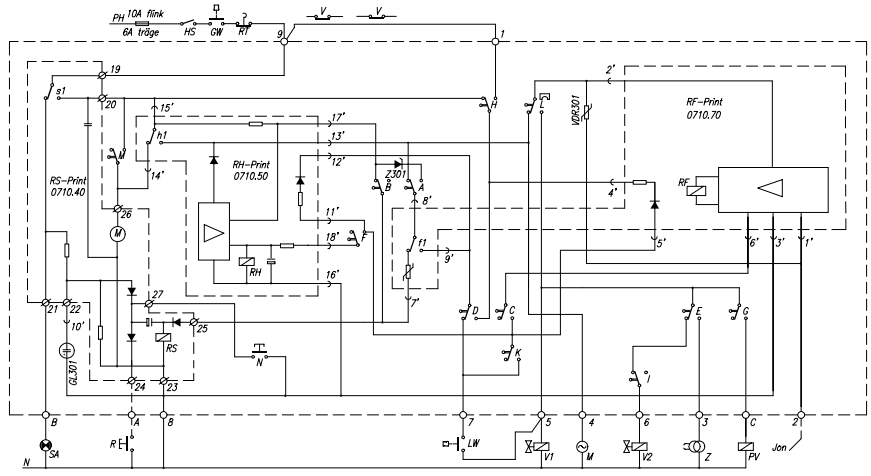


| | |
|---|---|
| HS | Main Isolator |
| GW | Gas pressure proving switch, if fitted. |
| Th | Control thermostat |
| v | Gas valve proof of closure switches, if fitted, see fig. 3. |
| SA | External lockout signal |
| LW | Air pressure proving switch |
| PV | Pilot gas valve (interrupted system) |
| V1 | Start gas valve (expanding flame system) |
| V2 | Main gas valve |
| Z | Ignition Transformer |
| M | Burner Fan Motor |
| Ion | Flame detection probe |
| RS | Lockout relay, with contacts s1 |
| RH | Main relay with contacts h1 |
| RF | Flame relay with contacts f1 |
| SY | Synchronous timing motor |



MMI 810.1

## INSTALLATION INSTRUCTIONS

### Control Box

1. The control box wiring base is supplied with 2 fixing holes for mounting onto the burner.
2. To assist trouble-free operation choose a position where if possible, it is not subject to harsh vibration. Similarly the control should not be mounted in a position where the ambient temperature exceeds 60° C.
3. Ensure that the control box is correctly wired up in accordance with the appropriate diagram. A general diagram is provided on the underside of the control box, but it is advisable to refer to the burner manufac- turers scheme drawing, in case additional external interlocks are required for correct burner operation.
4. The control box will only function providing a load is connected onto terminals 5 or C, eg. start gas or pilot gas valve, see fig. 2. Similarly if this load employs half-wave rectification, the negative side of the load must be connected onto terminals 5 or C.
5. Observe correct wiring polarity of live and neutral, live onto terminal 9, neutral onto 8, see fig. 2.
6. Where the burner fan motor loading exceeds the control box current rating of 2A, a contactor or starter must be used to switch the load. Similarly, if the motor is over 1/4 HP, and is of the split-phase start variety, a contactor must be used to carry the electrical loading.
7. Proof of closure switches on gas valves can be interlocked with the operation of the control box, across the start interlock circuit over terminals 9 and 1. Where this feature is required, the connections must be made in accordance with those shown on fig. 3.
8. Where a timeswitch is to be fitted, the timeswitch contacts should be connected in series with the thermo- stats to terminal 9.

### Flame Ionisation Probe

1. For best results, the length of wiring run between flame probe and control box, should be kept as short as possible. Maximum permissible length 20 metres.
2. The flame probe should be well positioned in the flame, but remote as practical from the H.T. ignition electrode. The control box flame detection amplifier is suppressed for „spark splash“ onto the probe, nevertheless contact between H.T. ignition spark and flame probe must be avoided.
3. Ensure that the boiler/burner are effectively bonded to the incoming earth from the mains supply, otherwise little or no flame signal may result.
4. The wiring to the flame probe and H.T. ignition electrode should not be run adjacent to each other.

### EXTERNAL WIRING DIAGRAM Fig.2

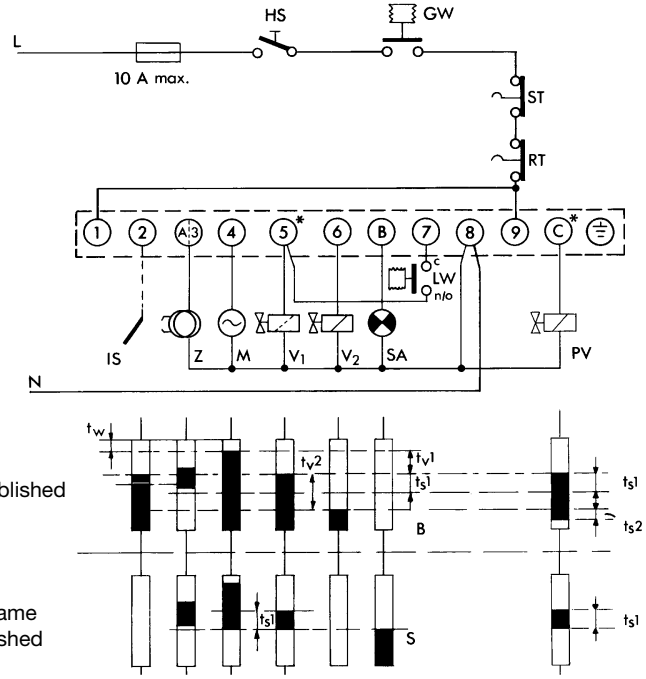





start-up
flame established

start-up, flame
not established

| | |
|---|---|
| HS | Main Isolator |
| GW | Gas pressure proving switch, if fitted |
| ST | Limit thermostat |
| RT | Control thermostat |
| V2 | approx. 10 secs. |
| IS | Flame detection probe |
| Z | Ignition Transformer |
| M | Burner Fan Motor |
| PV | Pilot gas valve (interrupted system) |
| V1 | Start gas valve (expanding flame system) |
| V2 | Main gas valve |
| SA | External lockout signal 2. If this load |
| LW | Air pressure proving switch side of the |
| B | „Run“ position S „Lockout“ |
| | |
| tw | Waiting time at start position |
| tv1 | Pre-purge period |
| ts1 | Ignition safety time |
| tv2 | Delay to high flame |
| ts2 | Main flame establishment time |

### Use with proof of closure switches Fig.3

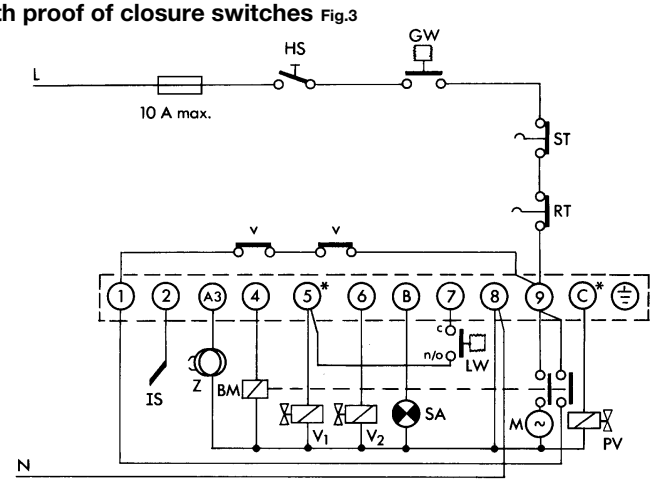


Refer generally, but the following additional information applies.

| | |
|---|---|
| v | Gas valve proof of closure switches are made when valves are shut. |
| BM | Burner fan motor starter or contactor |

The control must be wired in accordance with the diagram shown above, so that when the burner fan motor is energised, the „start interlock“ circuit cross terminals 9 and 1 is maintained throughout the remainder of the programme. This is not essential to ensure that all safety features are retained during the pre-purge period.

***Note:** This control will only function correctly providing a load, e.g. start gas valve or pilot gas valve, is connected onto terminals 5 or C. If this load employs a half-wave rectifier, the negative side of the load must be connected to 5 or C.

MMI 810.1

## COMMISSIONING & ROUTINE CHECKS

Generally the control box should not require any maintenance, and no attempt should be made to break the seal or remove the cover. On commissioning and during each routine service visit it is advisable to carry out the following checks. These should only be done by a competent Service Engineer.

1. Close the main gas cock, link out the gas pressure switch (if fitted) and allow the burner to start. The control box should go to l ockout after the expiry of the ignition safety time.
2. Re-open the main gas cock, reset the control box allowing the burner to start. When the burner is at the „run“ position, close the main cock. When the flame goes out, the control box should go to lockout almost immediately. Remove link across gas pressure switch (if fitted) and open main gas cock.
3. Allow the burner to start, and during the pre-purge period, simulate a failure in the combustion air supply. The control box should go to lockout almost immediately.
4. Re-start the burner and during the pre-purge, simulate if possible a false flame signal. The burner should shut down immediately with the control box going to lock- out. Remove source of flame simulation.
5. Before attempting to start the burner, simulate „combustion air supply established“. The control box synchronous motor will run, but start-up of the burner will be prevented.
   Remove source of air supply simulation.

## NOTES ON FLAME DETECTION

### General

A flame detection or ionisation probe is simply a metal electrode which is positioned in the flame. When an a.c. voltage is applied between the burner and probe, a d.c. current flows through the probe via the flame to the burner (earth). The flame therefore acts as a rectifier. The resulting d.c. current is amplified such that it is sufficient to operate the flame relay within the burner control box.
If the insulation between the flame probe and earth is insufficient, leakage currents will occur and these will be a.c. A filter incorporated in the control box amplifier will separate leakage currents from the ionisation current. In cases of short circuit between the probe and burner, the rectifying action will not take place and the burner control reacts as if a „loss of flame“ occurs.

### Interference to flame signal

One principal source of problem with this system, is interference to the flame signal from the ignition spark. The ignition spark may produce its own ionisation current, the polarity of which is often random, and may therefore oppose and possibly swamp the flame signal current. The result will sometimes be a nuisance lockout.
The MMI 810.1 control box is designed to limit this problem to a minimum.
During the ignition sequence, the flame relay is purposely energised at the commencement of the ignition safety time. Just prior to the lockout position being reached, the ignition circuit is switched off. This provides the flame detection system with a brief period to react to a tlame signal which will then be free from ignition interference and allows the flame relay to be maintained if flame is detected at this point.
The Satronic ZT 812 High Frequency Ignition System, see leaflet A12 issue 2, also eliminates the effects of spark interference. The output is so arranged that any ionisation current from the spark is polarised to be in the same direction as the flame signal current.

### Measurement of Flame Signal Current

To ensure good positioning of the flame probe, a simple current measurement can be taken. Figure 4 below shows the method using a d.c. micro-ammeter ranges 0 – 10µA, 0 – 100µA.
The measurement should not be taken whilst the ignition spark is on, as this will influence the flame signal. Typical readings which could be expected are 10µA – 15µA.

**Fig. 4 Ionisation signal current**

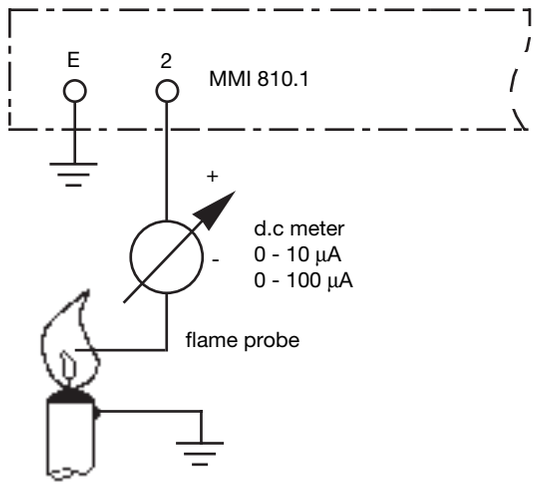


Use of MMI 810.1 Mod 40-34 as a replacement for earlier series controls
The MMI 810.1 can be used as a direct replacement for earlier series controls produced by Satronic.
Most TTG 760 or TTG 760-1 controls where used on the flame rectification or ionisation mode can be directly replaced by the MMI 810 series.
Simply unplug the TTG control box, and fit the MMI 810.1 directly into the existing wiring base.
Note: This does not apply in the case of TTG 760 Mod FN.



ПРОМЭЛЕКТРОНИКА / sales@prom-elec.com

## SUMMARY OF SAFETY FEATURES

1. Flame failure during a run, results in burner shut-down and lockout within 1 second.
2. Failure to establish and detect flame during the light-up sequence, results in burner shut-down and lockout within 2 5 seconds from the initial release of fuel. The precise timing will depend on the model reference.
3. Failure to establish and detect the main flame will result in lockout after the pilot valve has been switched off.
4. Air supply failure at any time, results in burner shut-dowi and immediate lockout.
5. The air pressure proving switch, is checked in both the „no air“ and „air supply proved“ positions. From the initial start up of the burner fan motor, a period of 5 seconds is allowed by the control box for the pressure switch to detect a combustion air supply.
6. Restoration of the power supply after an interruption, results in a full light-up sequence to safely restart the burner. Power failure after a lockout, will not interfere with this condition when the supply has been restored.
7. False flame signats at the start point and during pre-purge result in burner shut-down and lockout.
8. The light-up sequence can only commence providing the cam switches and relay contacts within the control box are at their correct relative positions, and continuity of the lockout relay circuit is proved.

## FAULT F INDING

1. Burner will not start. Coloured programme indicator stopped on blue line in white sector.
   a) Check electrical supply is switched on.
   b) Check that thermostat circuit is „calling for heat“ and timeswitch circuit (if fitted) is made. A supply on terminal 9 will determine this.
   c) Check that start interlock circuit across terminals 9 and 1 is made. Where proof of closure switches on gas valves are fitted and interlocked with the control box, failure to start could imply that the gas valves are not properly shut.

2. Burner will not start. Synchronous motor runs, coloured programme indicator rotates but burner does not start. Check air pressure proving switch is in correct state i.e. „no air“ position.

3. Burner starts but goes to lockout. Programme indicator stopped on red line in blue sector.
   a) Check air pressure proving switch.
   b) Check that a load, e.g. start gas valve is connected to terminal 5.
   c) Check continuity of start gas coil winding.
   d) If start gas valve has coil with half-wave rectification, check that negative side is connected to terminal 5.
   e) Check for flame simulation or false flame signal.

4. Burner starts but goes to lockout. Coloured programme indicator stopped in blue sector.
   a) Check for combustion air supply failure.
   b) Check for flame simulation, if necessary, change control box.
   c) Check for continuity of start gas valve coil circuit.

5. Burner starts, flame established but control box goes to lockout. Coloured programme indicator stopped at end of yellow sector/start of red sector.
   a) Check that flame detection probe is in contact with flame.
   b) Check that flame probe insulator is not cracked. A cracked insulator will be sufficient to give rise to an a.c. leakage current. See notes on flame detection principles.
   c) Check that flame probe is not in contact with other metallic parts of the burner.
6. Burner starts, flame established but control box goes to lockout. Coloured programme indicator stopped at end of yellow/start of green sector. For burners using an interrupted pilot system, this is an indication that the main flame has not been established or detected, and lockout has resulted immediately the pilot valve has been switched off
7. Burner starts, flame established but control box goes to lockout. Coloured programme indicator stopped in green sector. Check that when main gas valve has been switched on, the change in combustion or flame characteristics has not caused the flame to „lift off“ the combustion head and hence allow the flame probe to lose contact with the flame.
8. Burner starts, runs but subsequentty goes to lockout. Coloured programme indicator stopped at end of green/ start of white sector.
   a) Check for interruption in gas supply.
   b) Check for failure of combustion air supply.
   c) Check flame probe position for proper contact with flame.
   d) Check flame probe insulator for soundness.
   e) If necessary, change control box.

**Note:** If the control box goes to lockout, it is generally performing the function it is designed for.

**Causes of Lockout**

1. No Ignition.
2. ignition not in correct place, check electrode settings and ceramic insulator for cracks or damage.
3. No gas supply.
4. Gas valves not opening.
5. Failure of combustion air supply.
6. Incorrectly positioned flame probe, poor earth contact with flame, interference to flame signal from ignition spark.
7. Faulty control box.

## TECHNICAL SPECIFICATION

### 1. Electrical

| | |
|---|---|
| Supply: | 240V (+10%, –15%)<br>50 Hz (50 – 60 Hz) |
| Supply variations: | Timings will only vary in proportion to the supply frequency. |
| Max. Fuse rating: | 10A (rapid) 6A (slow) |
| Power consumption: | 10 VA Max. |
| Max. output current per terminal: | |
| - Kl.3 | 2 A, cos φ 0.2 |
| - Kl. 4, B | 2 A, cos φ 0.4 |
| - Kl. 5, 6. C | 1 A, cos φ 0.4 |
| Total output current: | 5 A, cos φ 0.4 |
| Air pressure proving switch contacts: | 5 A rating at 220/240V, reaction time better than 5 seconds. |
| Flame detection system: | Ionisation |
| Min. Fiame signal current: | 1.0µA |
| Typical flame signal current: | 10µA – 15µA |
| Max. flame signal current: | 40µA – 50µA |
| Insulation standard: | P44 |

### 2. Timings

| | |
|---|---|
| Waiting time at start position: | 9 secs approx. |
| Pre-purge time: | 34 secs |
| Pre-ignition time: | Nil Ignition safety |
| time ts1: | 5 secs max. |
| Approx. delay time to main flame: | 10 secs. approx. |
| Main flame establish-ment time ts2: | 5 secs max. |
| Reaction to loss of flame: | Less than I.O sec. |
| Reset time from lockout: | None |

### 3. General

| | |
|---|---|
| Ambient temperature rating: | –20 ... +60 C all models. |
| Flame sensing probe: | Heat resisting metal, well insulated. (Material and insulation as for an ignition electrode) Insulation resistance better than 50MΩ |
| Max. wiring cable length: | 20m |
| Weight: | 0.35 Kg, inclusive of wiring base. |
| Mounting attitude: | Any |

### 4. Model Nos.

The various model numbers below apply to the appropriate Standards and Approval in the tollowing countries, and are suitable for intermittent pilot systems (expanding flame) only. See leaflet G27.

For intermittent or interrupted pilot systems MMI 810.1 Mod 40-34 is approved in the United K ingdom.

**MMI 810.1 CONTROL BOX WITH WIRING BASE**

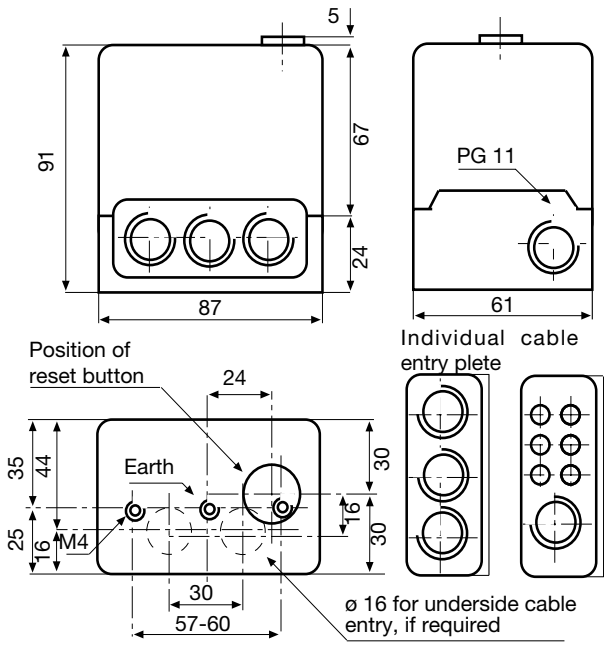


Special Note: If at any time this product requires to be repaired, such repair should only be carried out by Satronic or their nominated Agent. It should not be repaired by unauthorised repairing agencies or companies.




Satronic AG
Brüelstrasse 7
Postfach 324
CH-8157 Dielsdorf