7800 SERIES
EC7830A, EC7850A
Relay Module

PRODUCT DATA



GENERAL

The Honeywell EC7830A or EC7850A Relay Module is a microprocessor based integrated burner control for automatically fired gas, oil, or combination fuel single burner full modulation (EC7850A) or on/off (EC7830A) power burner applications. The EC7830A or EC7850A consists of a Relay Module. Subbase, Amplifier, and Purge Card are required to complete the system. The Keyboard Display, which is optional, can be mounted on the Relay Module or on the face of a panel door. The Keyboard Display can also be mounted remotely from the panel, provided this is approved for the application.

The 7800 SERIES is programmed to provide a level of safety, functional capability and features beyond the capacity of conventional controls.

Functions provided by the 7800 SERIES include automatic burner sequencing, flame supervision, system status indication, system or self-diagnostics and troubleshooting. Text readout for the Keyboard Display Module is available in English, Spanish, Portuguese, French, German and Italian languages.

FEATURES

- **Safety features:**
  - **— Interlock check.**
  - **— Closed loop logic test.**
  - **— Dynamic AMPLI-CHECK™**
  - **— Dynamic input check.**
  - **— Dynamic safety relay test.**
  - **— Dynamic self-check logic.**
  - **— Expanded safe-start check.**
  - **— High Fire Purge Switch test (EC7850A).**
  - **— Internal hardware status monitoring.**
  - **— Low Fire Start Switch test (EC7850A).**
  - **— Tamper resistant timing and logic.**
- **First-out annunciation and system diagnostics provided by a 2 row by 20 column Vacuum Fluorescent Display (VFD) located on the Keyboard Display Module. Text readout for this unique Keyboard Display Module is available in English, Spanish, Portuguese, French, German and Italian languages.**
- **Access for external electrical voltage checks.**
- **Application flexibility.**
- **Dependable, long-term operation provided by microcomputer technology.**
- **Five sequence information Light Emitting Diodes (LEDs)— Power, Pilot, Flame, Main, Alarm (see Fig. 17).**
- **Five function Run/Test Switch.**
- **Interchangeable plug-in flame amplifiers.**
- **Nonvolatile memory for retaining history files and sequencing status after loss of power.**
- **Remote mounting of the Keyboard Display Module (subject to application approval).**
- **Remote reset (subject to application approval).**
- **Burner controller data available on the Keyboard Display Module:**
  - **— Sequence status.**
  - **— Sequence time.**
  - **— Hold status.**
  - **— Lockout/alarm status.**
  - **— Flame signal strength.**
  - **— Total cycles of operation.**
  - **— Total hours of operation.**
  - **— Fault history of six most recent faults:**
    - **Cycles of operation at time of fault.**
    - **Fault message and code.**
    - **Hours of operation at time of fault.**
    - **Sequence status at time of fault.**
    - **Sequence time at time of fault.**
  - **— Diagnostic information:**
    - **Device type.**
    - **Flame amplifier type.**
    - **Flame failure response time.**
    - **Manufacturing code.**
    - **On/Off status of all digital inputs and outputs.**
    - **Selected prepurge time.**
    - **Software revision and version of Relay Module and Keyboard Display Module.**
    - **Status of configuration jumpers.**
    - **Status of Run/Test Switch.**

Contents

General 1
Features 1
Specifications 2
Ordering Information 2
Principle Technical Features 7
Safety Provisions 8
Installation and Wiring 10
Operation 21
Checkout 29
Troubleshooting 30

Copyright © 1996 Honeywell Inc. • All Rights Reserved

ПРОМЭЛЕКТРОНИКА / sales@prom-elec.com

SPECIFICATIONS

Electrical Ratings, See Tables 1A and 1B:
Voltage and Frequency: 220-240 Vac (+10/-15%), 50 or 60 Hz (+/- 10%). (Frequency is selected by OS number.)
Keyboard Display Module: 13 Vdc peak full wave rectified (+20/-15%).
Power Consumption:
Relay Module: 10W maximum.
Display Module: 3W maximum.
Maximum Total Connected Load: 2000 VA.
Fusing: Total Connected Load: 20A maximum.

Environmental Ratings:
Ambient Temperature:
Operating: -40°C to 60°C.
Storage: -40°C to 65°C.
Humidity: 85% RH continuous, noncondensing.
Vibration: 0.5G environment.

Dimensions:
Refer to Fig. 1 and 2.

Weight:
Relay Module: 0,730 kg unpacked.
Keyboard Display Module: 0,113 kg unpacked.

IMPORTANT
Flame Detection System available for use with the Relay Module. To select your Plug-in Flame Signal Amplifier and matching Flame Detector, see Table 2.

Approvals:
This product complies with the following European directives:
— Gas Appliance Directive (90/269/EEG).
— Low Voltage Directive (73/23/EEG).
— EMC Directive (89/336/EEG).
— GASTEC (CE-63AP3070/1).

This product is approved according to EN298, “Automatic gas burner systems for gas burners and gas burning appliances with or without fans.”

Please note the following to comply with EN60730 for remote mounting of the display and/or remote reset. It is necessary to provide electrical separation by insulation at least equivalent to double or reinforced insulation. This can be accomplished by either:
— Optically isolating the communication and/or remote reset lines from the control cabinet, or
— Providing physical separation from the communication and/or remote reset lines through the use of electrical conduit and a remote display cover assembly (part no. 204718A) or other suitable en-closure that meets IP40 class of protection.

Mounting:
Q7800A for panel mount. To meet EN60730, the Relay Module has to be mounted in a secured panel that meets IP40 class of protection.

Required Components:
Plug-in Flame Signal Amplifier, see Table 2.
Plug-in Purge Timer Cards: selectable ST7800A: two seconds to 30 minutes.
Q7800A Panel Mount Subbase.

ORDERING INFORMATION

When purchasing replacement and modernization products from your TRADELINE® wholesaler or distributor, refer to the TRADELINE® Catalog or price sheets for complete ordering number .

If you have additional questions, need further information, or would like to comment on our products or services, please write or phone:

1. Your local Home and Building Control Sales Office (check your phone directory).
2. Honeywell B.V.
   Combustion Controls Center
   Phileas Foggstraat 7
   7821 AJ Emmen
   The Netherlands
3. Honeywell Home and Building Control
   1985 Douglas Drive North
   Golden Valley, MN 55422 (612) 951-1000

In Canada—Honeywell Limited/Honeywell Limitee, 740 Ellesmere Road, Scarborough, Ontario M1P 2V9 International Sales and Service Offices in all principal cities of the world. Manufacturing in Australia, Canada, Finland, France, Germany, Japan, Mexico, Netherlands, Spain, Taiwan, United Kingdom, U.S.A.

Table 1A. Terminal Ratings for EC7830A.

Terminal No.	Abbreviation	Description	Ratings
G	—	Flame Sensor Ground[1]	—
Earth G	—	Earth Ground[1]	—
N	—	Line Voltage Common (Neutral)	—
3	AL	Alarm (Normally Open)	220/230/240 Vac, 1A, 10A inrush for 5000 cycles.
4	FAN	Burner/Blower Motor	220/230/240 Vac, 4A at P.F. = 0.5, 20A inrush.
5	L1	Line Voltage Supply (L1)	220-240 Vac (+10/-15%), 50 Hz (+/- 10%).[2]
6	RT	Limits and Burner Control	220/230/240 Vac, 5 A (maximum).
7	LD2	Airflow Switch Input	220/230/240 Vac, 1 mA.
8	PV1	Pilot Valve 1 (Interrupted)	220/230/240 Vac, 4A at P.F. = 0.5, 20A inrush.[3]
9	MV	Main Fuel Valve	220/230/240 Vac, 4A at P.F. = 0.5, 20A inrush.[3]
10	IGN	Ignition	220/230/240 Vac, 2A at P.F. = 0.2.[3]
F(11)	—	Flame Signal	136 to 220 Vac, current limited.
16	—	Control Voltage	230 Vac (+15/-19%)[2]
17	ES2	Preignition Interlock Input	220/230/240 Vac, 1 mA.
20	LOS	Lockout Input	220/230/240 Vac, 1 mA.
21	PV2	Pilot Valve 2 (Intermittent)	220/230/240 Vac, 4A at P.F. = 0.5, 20A inrush.[3]
22	SHTR	Shutter	Shutter Drive for Dynamic Self-Check flame sensor.

1 The EC7830A must have an earth ground providing a connection between the subbase and the control panel or the equipment. The earth ground wire must be capable of conducting the current to blow the 20A fuse in event of an internal short circuit. It is recommended that the EC7830A have a low impedance ground connection to the equipment frame which, in turn, needs a low impedance connection to earth ground. For a ground path to be low impedance at RF frequencies, the connection must be made by minimum length conductors having maximum surface areas. Wide straps or brackets are preferred rather than leadwires. Be careful to ensure that mechanically tightened joints along the ground path, such as pipe or conduit threads or surfaces held together with fasteners, are free of nonconductive coatings and are protected against mating surface corrosion.

2 2000 VA maximum connected load to EC7830A Assembly.

3 Total load current, excluding Burner/Boiler Motor and Firing Rate Outputs cannot exceed 5A, 25A inrush.

Table 1B. Terminal Ratings for EC7850A.

Terminal No.	Abbreviation	Description	Ratings
G	—	Flame Sensor Ground [1]	—
Earth G	—	Earth Ground[1]	—
N	—	Line Voltage Common (Neutral)	—
3	AL	Alarm (Normally Open)	220/230/240 Vac, 1A, 10A inrush for 5000 cycles.
4	L1	Line Voltage Supply (L1)	220-240 Vac (+10/-15%), 50/60 Hz (+/- 10%). [2,5]
5	FAN	Burner/Blower Motor	220/230/240 Vac, 4A at P.F. = 0.5, 20A inrush.
6	RT	Limits and Burner Control	220/230/240 Vac, 5 A (maximum).
7	LD2	Airflow Switch Input	220/230/240 Vac, 1 mA.
8	PV1	Pilot Valve 1 (Interrupted)	220/230/240 Vac, 4A at P.F. = 0.5, 20A inrush.[3]
9	MV	Main Fuel Valve	220/230/240 Vac, 4A at P.F. = 0.5, 20A inrush.[3]
10	IGN	Ignition	220/230/240 Vac, 2A at P.F. = 0.2.[3]
F(11)	—	Flame Signal	136 to 220 Vac, current limited.
12	HI	Firing Rate High Fire	220/230/240 Vac, 0.5A at P.F. = 0.5. [4]
13	COM	Firing Rate Common	220/230/240 Vac, 0.5A at P.F. = 0.5. [4]
14	MOD	Firing Rate Modulate	220/230/240 Vac, 0.5A at P.F. = 0.5. [4]
15	LO	Firing Rate Low Fire	220/230/240 Vac, 0.5A at P.F. = 0.5. [4]
16	—	Control Voltage	230 Vac (+15/-19%)[2]
17	ES2	Preignition Interlock Input	220/230/240 Vac, 1 mA.
18	ES1	Low Fire Switch Input	220/230/240 Vac, 1 mA.
19	ES3	High Fire Switch Input	220/230/240 Vac, 1 mA.
20	LOS	Lockout Input	220/230/240 Vac, 1 mA.
21	PV2	Pilot Valve 2 (Intermittent)	220/230/240 Vac, 4A at P.F. = 0.5, 20A inrush.[3]
22	SHTR	Shutter	Shutter Drive for Dynamic Self-Check flame sensor.

1 The EC7850A must have an earth ground providing a connection between the subbase and the control panel or the equipment. The earth ground wire must be capable of conducting the current to blow the 20A fuse in event of an internal short circuit. It is recommended that the EC7850A have a low impedance ground connection to the equipment frame which, in turn, needs a low impedance connection to earth ground. For a ground path to be low impedance at RF frequencies, the connection must be made by minimum length conductors having maximum surface areas. Wide straps or brackets are preferred rather than leadwires. Be careful to ensure that mechanically tightened joints along the ground path, such as pipe or conduit threads or surfaces held together with fasteners, are free of nonconductive coatings and are protected against mating surface corrosion.

2 2000 VA maximum connected load to EC7850A Assembly.

3 Total load current, excluding Burner/Boiler Motor and Firing Rate Outputs cannot exceed 5A, 25A inrush.

4 Can also be 24 Vac, 3A at P.F. = 0.5.

5 50/60 Hz frequency selection by OS number.

Table 2. Flame Detection Systems.

Plug-in Flame Signal Amplifiers				Applicable Flame Detectors			
Type	Color	Self-Checking	Model	Flame Failure Response Time	Fuel	Type	Models
Rectification	Green	No	R7847A	1 or 2 sec maximum	Gas	Rectifying Flame Rod Holders [b]	C7004, C7007, C7011. Complete Assemblies: C7008, C7009, Q179.
		No	R7847A	1 or 2 sec maximum	Oil	Rectifying Photocell	C7003, C7010, C7013, C7014.[c]
		Dynamic AMPLI-CHECK™	R7847B [d]	1 or 2 sec maximum	Gas	Rectifying Flame Rod Holders [b]	C7004, C7007, C7011. Complete Assemblies: C7008, C7009, Q179.
		Dynamic AMPLI-CHECK™	R7847B [d]	1 or 2 sec maximum	Oil	Rectifying Photocell	C7003, C7010, C7013, C7014.[c]
Ultraviolet	Purple	No [a]	R7849A	1 or 2 sec maximum	Gas, oil	Ultraviolet (Minipeeper)	C7027, C7035, C7044.[e]
		Dynamic AMPLI-CHECK™[a]	R7849B [d]	1 or 2 sec maximum	Gas, oil	Ultraviolet (Minipeeper)	C7027, C7035, C7044.[e]
		Dynamic Self-Check	R7861A [f]	1 or 2 sec maximum	Gas, oil, coal	Ultraviolet	C7061.[g,h]
	Blue		R7886	2 sec maximum		UV Adjustable Sensitivity	C7076.[g]

[a] Dynamic Self-Check Ultraviolet Amplifiers should be used only on burners that cycle on-off at least once every twenty-four hours. Appliances with burners that remain on continuously for twenty-four hours or longer should use C7061A Flame Detector with R7861A Amplifier.
[b] Order flame rod separately; see Instructions for holder.
[c] Use only Honeywell Photocell, part no. 38316.
[d] Circuitry tests flame signal amplifier at least 12 times a minute during burner operation and shuts down burner if amplifier fails.
[e] C7027, C7035 and C7044 Flame Detectors should be used only on burners that cycle on-off at least once every twenty-four hours. Appliances with burners that remain on continuously for twenty-four hours or longer should use C7061A Flame Detector with R7861A Amplifier as ultraviolet flame detection system.
[f] Circuitry tests all electronic components in flame detection system (amplifier and detector) 12 times a minute during burner operation and shuts down burner if detection system fails.
[g] 220/240 Vac to 120 Vac, 10 VA transformer (not provided) must be used to drive the shutter (see Fig. 14).
[h] Refer to instructions packed with C7061 for specifics on shutter wiring.

Table 3. Sequence Timing for Normal Operation.

Device	Initiate	Standby	Purge or Waiting	Preignition	First Safety Time	Pilot Stab.	Main Trial Time***	Main Stab.	Run	Post Purge
EC7830A1033	2 sec	*	**	3 sec	3 or 5 sec	5 sec	3 or 5 sec	5 sec	*	2 sec
EC7830A1041	2 sec	*	**	3 sec	3 or 5 sec	5 sec	3 or 5 sec	5 sec	*	30 sec
EC7830A1066	2 sec	*	**	3 sec	3 or 5 sec	5 sec	3 or 5 sec	5 sec	*	15 sec
EC7850A1064 [a]	2 sec	*	**	3 sec	3 or 5 sec	5 sec	3 or 5 sec	5 sec	*	30 sec
EC7850A1072	2 sec	*	**	3 sec	3 or 5 sec	5 sec	3 or 5 sec	5 sec	*	2 sec
EC7850A1080 [b]	2 sec	*	**	3 sec	3 or 5 sec	5 sec	3 or 5 sec	5 sec	*	30 sec
EC7850A1106 [b]	2 sec	*	**	3 sec	3 or 5 sec	5 sec	3 or 5 sec	5 sec	*	2 sec
EC7850A1114	2 sec	*	**	3 sec	3 or 5 sec	5 sec	3 or 5 sec	5 sec	*	30 sec
EC7850A1122	2 sec	*	**	3 sec	3 or 5 sec	5 sec	3 or 5 sec	5 sec	*	15 sec

* STANDBY and RUN can be an infinite time period.
** Waiting Time will be determined by which ST7800A purge card is selected.
*** Second Safety Time is Main Trial Time plus Flame Failure Response Time.
[a] Dynamic Damper Check.
[b] 60 Hz models.

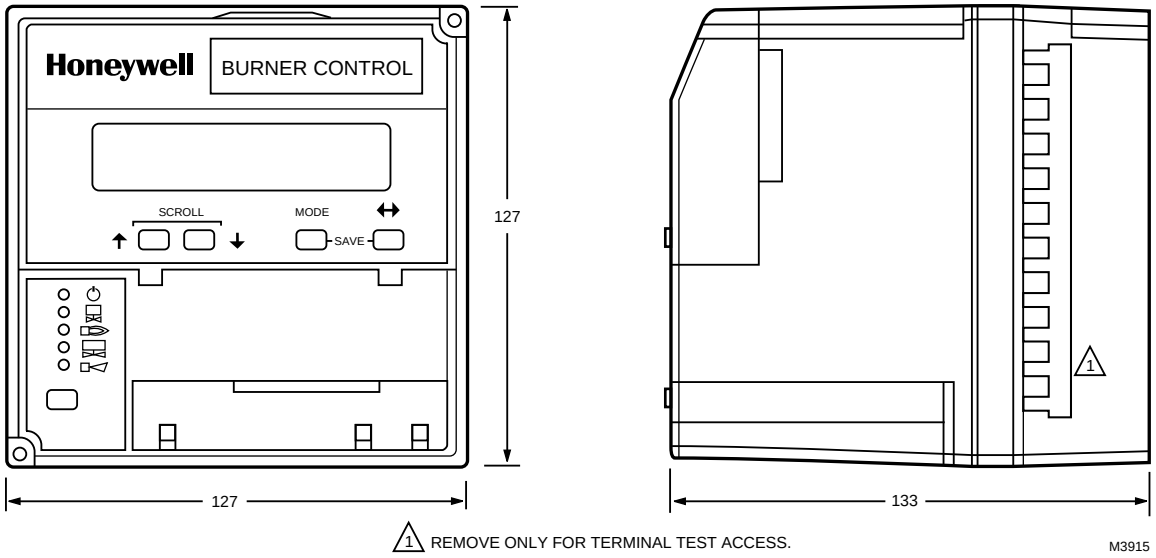

Fig. 1. Mounting dimensions of the Relay Module and Q7800A Subbase, in millimeters.

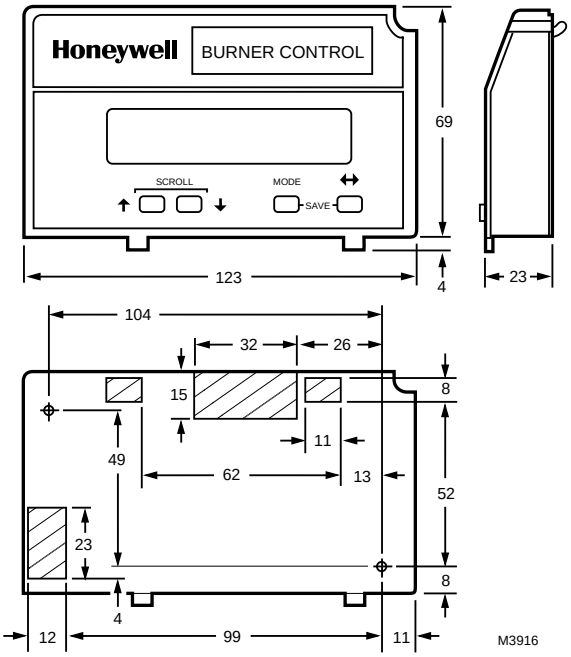

Fig. 2. Mounting dimensions of Keyboard Display Module, in millimeters.

Accessories:

Optional:

- ControlBus 5-Wire Electrical Connector—part no. 203541.
- Dust Cover—part no. 221729.
- Flame Simulators:
  - — part no. 203659 UV Flame Simulator.
  - — part no. 123514A Rectification Simulator.
- Keyboard Display Module:
  - — part no. S7800A1001 English language display
  - — part no. S7800A1035 French language display
  - — part no. S7800A1043 German language display
  - — part no. S7800A1050 Italian language display
  - — part no. S7800A1068 Spanish language display
  - — part no. S7800A1126 Portuguese language display
- DATA CONTROLBUS MODULE™ — part no. S7810A1009.
- Remote Reset Module—part no. S7820A1007.
- Remote Display Mounting Bracket—part no. 203765.
- 1.5 meter Extension Cable Assembly—part no. 221818A.
- NEMA 4 Cover Assembly for S7800A
- Keyboard Display Module—part no. 204718A.

PRINCIPAL TECHNICAL FEATURES

The EC7830A or EC7850A Relay Module provide all customary flame safeguard functions while providing significant advancements in the areas of safety, annunciation and system diagnostics.

Safety Shutdown (Lockout) Occurs if:

❶ INITIATE Period.
- a. Purge card is not installed or removed.
- b. Purge card is defective.
- c. Configuration jumpers were changed (after 200 hours of operation).
- d. AC line power errors, see Operation.
- e. Four minute INITIATE period is exceeded.

❷ STANDBY Period.
- a. Flame signal is present after 40 seconds.
- b. Preignition Interlock is open an accumulative time of 30 seconds.
- c. Airflow Switch feature is enabled and the Airflow Switch is closed for 120 seconds with Limits and Burner Control closed.
- d. Ignition/pilot valve/intermittent pilot valve terminal is energized.
- e. Main valve terminal is energized.
- f. Internal system fault.
- g. Purge card is not installed or removed.
- h. Purge card is defective.
- i. Lockout Input opens during STANDBY.

❸ PURGE Period.
- a. Preignition Interlock opens anytime during PURGE.
- b. Flame signal detected during PURGE.
- c. High Fire Switch fails to close within five minutes after the firing rate motor is commanded to drive to high fire position at start of PURGE (EC7850A).
- d. Low Fire Switch fails to close within five minutes, after firing rate motor is commanded to drive to low fire position at end of PURGE (EC7850A). *EC7850A1064 only: Requires Low Fire Switch to be open when High Fire Switch is closed, and High Fire Switch to be open when Low Fire Switch is closed.*
- e. Airflow Switch Input does not close within 10 seconds.
- f. If Airflow Switch is disabled, there is no jumper between terminals 6 and 7.
- g. Airflow Switch opens during PURGE.
- h. Lockout Input opens during PURGE.
- i. Ignition/pilot valve/intermittent pilot valve terminal is energized.
- j. Main valve terminal is energized.
- k. Internal system fault.
- l. Purge card is removed.
- m. Purge card is defective.

❹ PREIGNITION Period.
- a. Lockout Input opens during PREIGNITION.
- b. Airflow Switch opens during PREIGNITION.
- c. Preignition Interlock opens during PREIGNITION.
- d. Ignition terminal is not energized.
- e. Pilot valve/intermittent pilot valve terminal is energized.
- f. Main valve terminal is energized.
- g. Internal system fault.
- h. Purge card is removed.
- i. Purge card is defective.

❺ SAFETY 1 Period.
- a. Lockout Input opens during SAFETY 1.
- b. Airflow Switch opens during SAFETY 1.
- c. Low Fire Switch opens (EC7850A). High Fire Switch is closed (EC7850A1064 only).
- d. No flame is present at the end of SAFETY 1.
- e. Ignition terminal is not energized.
- f. Pilot valve/intermittent pilot valve terminal is not energized.
- g. Main valve terminal is energized.
- h. Internal system fault.
- i. Purge card is removed.
- j. Purge card is defective.

❻ PILOT STAB. Period.
- a. Lockout Input opens during PILOT STAB.
- b. Airflow Switch opens during PILOT STAB.
- c. Low Fire Switch opens (EC7850A). High Fire Switch is closed (EC7850A1064 only).
- d. No flame is present.
- e. Ignition terminal is energized.
- f. Pilot valve/intermittent pilot valve terminal is not energized.
- g. Main valve terminal is energized.
- h. Internal system fault.
- i. Purge card is removed.
- j. Purge card is defective.

❼ MAIN TRIAL Period.
- a. Lockout Input opens during MAIN TRIAL.
- b. Airflow Switch opens during MAIN TRIAL.
- c. Low Fire Switch opens (EC7850A). High Fire Switch is closed (EC7850A1064 only).
- d. No flame is present.
- e. Ignition terminal is energized.
- f. Pilot valve/intermittent pilot valve terminal is not energized.
- g. Pilot valve is energized during MAIN TRIAL stabilization.
- h. Main valve terminal is not energized.
- i. Internal system fault.
- j. Purge card is removed.
- k. Purge card is defective.

❽ RUN Period.
- a. No flame is present.
- b. Lockout Input opens.
- c. Ignition/interrupted pilot valve terminal is energized.
- d. Main valve terminal is not energized.
- e. Internal system fault.
- f. Purge card is removed.
- g. Purge card is defective.
- h. Airflow Switch Input opens.

❾ POSTPURGE Period.
- a. Ignition/pilot valve/intermittent pilot valve terminal is energized.
- b. Main valve terminal is energized.
- c. Internal system fault.
- d. Purge card is removed.
- e. Purge card is defective.

SAFETY PROVISIONS

Internal Hardware Status Monitoring

The EC7830A or EC7850A Relay Module check the purge card for correct parity to prevent purge timing shifts and circuitry failures. It also analyzes the integrity of the configuration jumpers and internal hardware. The POWER LED blinks every four seconds, signifying an internal hardware check.

Closed Loop Logic Test

The test verifies the integrity of all safety critical loads, terminals 8, 9, 10 and 21. If the loads are not energized properly; eg, the main valve terminal is powered during PURGE, the EC7830A or EC7850A will lockout on safety shutdown. The EC7830A or EC7850A must react to input changes but avoid the occurrence of *nuisance* shutdown events. Signal conditioning is applied to line voltage inputs to verify proper operation in the presence of *normal* electrical line noise such as transient high voltage spikes or short periods of line dropout. Signal conditioning is tolerant of synchronous noise (line noise events that occur at the same time during each line cycle).

Dynamic Ampli-Check™

Dynamic AMPLI-CHECK™ circuitry tests the flame signal amplifier during burner operation and shuts down the EC7830A or EC7850A if the flame amplifier fails.

Dynamic Flame Amplifier and Shutter Check

Self-checking circuitry tests all electronic components in the flame detection system and amplifier 12 times per minute and shuts down the EC7830A or EC7850A if the detection system fails.

Dynamic Input Check

All system input circuits are examined to verify the EC7830A or EC7850A is capable of recognizing the true status of external controls, limits and interlocks. If any input fails this test, a safety shutdown occurs and the fault is annunciated.

Dynamic Safety Relay Test

Checks the ability of the dynamic safety relay contacts to open and close. It also verifies that the safety critical loads, terminals 8, 9, 10 and 21, can be de-energized, as required, by the Dynamic Self-Check logic.

Dynamic Self-Check Safety Circuit

The microcomputer tests itself and related hardware while at the same time the safety relay system tests the microcomputer operation. If a microcomputer or safety relay failure occurs and does not allow proper execution of the self-check routine, safety shutdown will occur and all safety critical loads will be de-energized.

Expanded Safe-Start Check

The conventional safe-start check, which prevents burner start-up if flame is indicated at start-up, is expanded to include a flame signal check during STANDBY, a preignition interlock check, an airflow switch check, and a safety critical load check.

High Fire Purge and Low Fire Start Switch Tests (EC7850A)

High Fire Purge Switch Test examines the Purge Position Interlock Switch at the moment the firing rate motor is commanded to the high fire position. Purge timing starts when the High Fire Switch Input is closed. This switch will also cause a hold (five minutes) condition when the switch is open before purge or opens during purge. The EC7850A will lockout and annunciate an alarm if the switch fails to close within the hold time period.

Low Fire Start Switch Test examines the Low Fire Start Switch at the moment PURGE is completed. Ignition trials start after the Low Fire Switch Input closes. The test is also used to prove that the firing rate motor is at low fire position throughout the ignition trial period. This switch will also cause a hold (five minutes) condition if the switch opens after purging is complete. The EC7850A will lockout and annunciate an alarm if the switch fails to close within the hold time period.

EC7850A1064 only: Requires Low Fire Switch to be open when High Fire Switch is closed, and High Fire Switch to be open when Low Fire Switch is closed.

Mandatory Purge

If lockout occurs after the initiation of ignition trials, (or at anytime during a sequence when the fuel valves may have been energized), a mandatory POSTPURGE period is imposed.

Off Cycle (STANDBY or PURGE) Flame Signal Check

The flame detection subsystem (flame detector and amplifier) is monitored during STANDBY. If a flame simulating condition or an actual flame exists, a system hold occurs and start-up is prevented. If the flame signal exists at any time after the first 40 seconds of STANDBY, a safety shutdown will occur and be annunciated. A shutter-check amplifier and self-checking detector are energized for the first 40 seconds during STANDBY and the last two seconds before exiting STANDBY. If a flame exists, a safety shutdown occurs. An AMPLI-CHECK™ Amplifier is energized continually through STANDBY and PURGE to detect any possibility of a runaway detector or a flame. If either situation happens, a safety shutdown occurs. A standard amplifier is energized continually through STANDBY and PURGE to detect any possibility of a runaway detector or a flame. If either situation happens, a safety shutdown occurs.

Preignition Output Circuit Check

At the end of PURGE, the Dynamic Safety Relay operation is checked. Also, all safety critical loads, terminals 8, 9, 10 and 21 are checked to verify the terminals are not powered. If the Dynamic Safety Relay operation is faulty, or if any of the safety critical loads are powered, safety shutdown occurs and is annunciated.

Tamper Resistant Timing and Logic

Safety and logic timings are inaccessible and cannot be altered or defeated.

Verified Spark Termination

The ignition terminal is monitored to verify early spark termination during PILOT STAB.

First-Out Annunciation and Self-Diagnostics

Sequence Status Lights (LEDs) provide positive visual indication of the program sequence: POWER, PILOT, FLAME, MAIN and ALARM. The green POWER LED blinks every four seconds to signify the EC7830A or EC7850A hardware is running correctly.

Multi-function Keyboard Display Module shows elapsed time during PURGE, PREIGNITION, SAFETY 1, PILOT STAB., MAIN TRIAL, and POSTPURGE. As an additional troubleshooting aid, it provides sequence timing, diagnostic information, and historical information when a safety shutdown or hold or normal operation occurs.

First-out Annunciation reports the cause of a safety shutdown or identifies the cause of a failure to start or continue the burner control sequence with a text description and numbered code via the Keyboard Display Module. It monitors all field input circuits, including the Flame Signal Amplifier and Firing Rate Position Switches. The system distinguishes 61 modes of failure and detects and annunciates difficult-to-find intermittent failures.

Self-Diagnostics adds to the First-out Annunciation by allowing the EC7830A or EC7850A to distinguish between field (external device) and internal (system related) problems. Faults associated within the flame detection subsystem, the Relay Module, or plug-in Purge Card, are isolated and reported by the Keyboard Display Module; see the Troubleshooting section.

Interlock Requirements

The following interlock inputs are provided:

Low Fire Switch Input (EC7850A)

This interlock (ES1) verifies the firing rate motor is in the low fire position before and during ignition trials.

High Fire Switch Input (EC7850A)

This interlock (ES3) verifies the firing rate motor is in the high fire position prior to and during PURGE.

Airflow Switch Input

This interlock verifies that there is airflow to the burner. If the Airflow Switch Input (LD2) is open for more than ten seconds into PURGE, the EC7830A or EC7850A will lockout. After entering PURGE, if the Airflow Switch Input opens during the first ten seconds, the purge timer will be reset. This provides a continuous PURGE to occur without interruption before the Ignition Trials. If the Air-flow Switch input opens anytime after ten seconds into PURGE, during the Ignition Trials or Run, it causes a lockout. The Airflow Switch is a site configurable option (see Table 6). If the Airflow Switch is disabled, then a jumper must be installed between Terminals 6 and 7. If the Airflow Switch is enabled, the EC7830A or EC7850A will lockout if it detects a short or jumper between Terminals 6 and 7.

Lockout Input

This interlock (LOS) input signifies a Lockout Interlock. The EC7830A or EC7850A will lockout anytime the Lock-out Input String opens.

Preignition Interlock

The Preignition Interlock input (ES2) is typically connected to proof-of-closure switches for fuel valve(s). The Preignition Interlock must be energized throughout PURGE and PREIGNITION. If the Preignition Interlock opens during STANDBY, it causes a hold (30 seconds). The EC7830A or EC7850A will lockout if the interlock does not close within 30 seconds during STANDBY. If the Preignition Interlock opens during PURGE or PREIGNITION, it will lockout. The Preignition Interlock is ignored during ignition trials, POSTPURGE, and during RUN.

INSTALLATION AND WIRING

Installation

⚠ CAUTION

1. Disconnect the power supply before beginning installation to prevent electrical shock, equipment and control damage. More than one power supply disconnect may be involved.
2. Wiring connections for the Relay Module are unique; therefore, refer to Figs. 3, 4, 5, or 6 or the correct Specifications for proper subbase wiring.
3. Wiring must comply with all applicable codes, ordinances and regulations.
4. Loads connected to the Relay Module must not exceed those listed on the Relay Module label or the Specifications, see Table 1.
5. Limits and interlocks must be rated to simultaneously carry and break current to the ignition transformer, pilot valve, and main fuel valve(s).
6. All external timers must be listed or component recognized by authorities who have jurisdiction for the specific purpose for which they are used.

IMPORTANT

1. *In order to meet EN60730, the Relay Module has to be mounted in a secured panel which meets IP 40 class of protection.*
2. *For on-off gas-fired systems, some authorities who have jurisdiction prohibit the wiring of any limit or operating contacts in series between the flame safeguard control and the main fuel valve(s).*
3. *Two Flame Detectors can be connected in parallel.*

Humidity

Install the Relay Module where the relative humidity never reaches the saturation point. The Relay Module is designed to operate in a maximum 85% RH continuous, noncondensing, moisture environment. Condensing moisture may cause a safety shutdown.

Vibration

Do not install the Relay Module where it could be subjected to in excess of 0.5G continuous maximum vibration.

Weather

The Relay Module is not designed to be weather tight. If installed outdoors, the Relay Module must be protected by an approved weather-tight enclosure.

Mounting Wiring Subbase

NOTE: For installation dimensions, see Fig. 1.

❶ Mount the subbase (Q7800) in any position except horizontally with the bifurcated contacts pointing down. The standard vertical position is recommended. Any other position decreases the maximum ambient temperature rating.

❷ Select a location within an electrical panel. The subbase must be mounted directly in the control cabinet. Be sure to allow adequate clearance for servicing, installation, access or removal of the Relay Module, Keyboard Display Module, flame amplifier, flame amplifier signal voltage probes, Run/Test Switch, electrical signal voltage probes and electrical field connections.

❸ For surface mounting, use the back of the subbase as a template to mark the four screw locations. Drill the pilot holes.

❹ Securely mount the subbase using four M3.5 x 0.6 screws.

Wiring

❶ a. For proper subbase wiring, refer to Fig. 4.
b. For proper remote wiring of the Keyboard Display Module, refer to Fig. 5 or 6 or to the Specifications for the Keyboard Display Module (65-0166), DATA CONTROLBUS MODULE™ (65-0091) or Extension Cable Assembly (65-0131).

❷ Disconnect the power supply from the main disconnect before beginning installation to prevent electrical shock and equipment damage. More than one disconnect may be involved.

❸ All wiring must comply with all applicable electrical codes, ordinances and regulations. The Keyboard Display Module, DATA CONTROLBUS MODULE™ (for remote mounting) or Remote Reset Module (for remote reset) must be wired in a daisy chain configuration, (1(a)-1(a), 2(b)-2(b), 3(c)-3(c)). The order of interconnection of all the devices listed above is not important. Be aware that modules on the closest and farthest end of the daisy chain configuration string require a 120 ohm (1/4 watt minimum) resistor termination across terminals 1 and 2 of the electrical connectors, for connections over 30 meters, see Fig. 5 and 6.

❹ Recommended grounding practices:
a. The earth ground provides for a connection between the subbase and the control panel of the equipment. The earth ground wire must be capable of conducting the current to blow the 20A fuse (or breaker) in event of an internal short circuit. It is recommended that the Relay Module have a low impedance ground connection to the equipment frame which, in turn, needs a low impedance connection to earth ground. For a ground path to be low impedance at RF frequencies, the connection must be made with minimum length conductors that have a maximum surface area. Wide straps or brackets are preferred rather than leadwires. Be careful to ensure that mechanically tightened joints along the ground path, such as pipe or conduit threads or surfaces held together with fasteners, are free of nonconductive coatings and are protected against corrosion on mating surfaces.

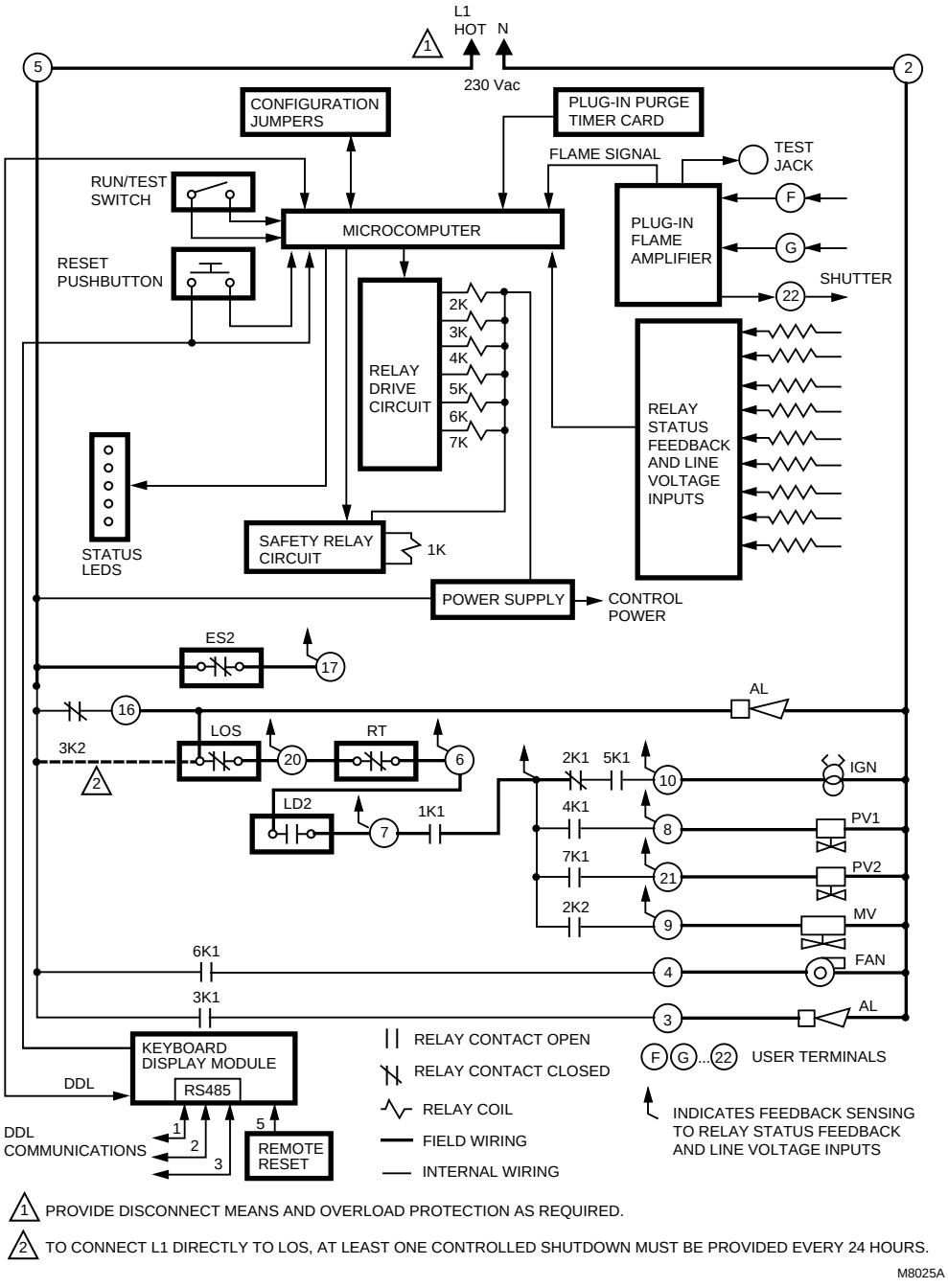

Fig. 3A. Internal block diagram of the EC7830A.

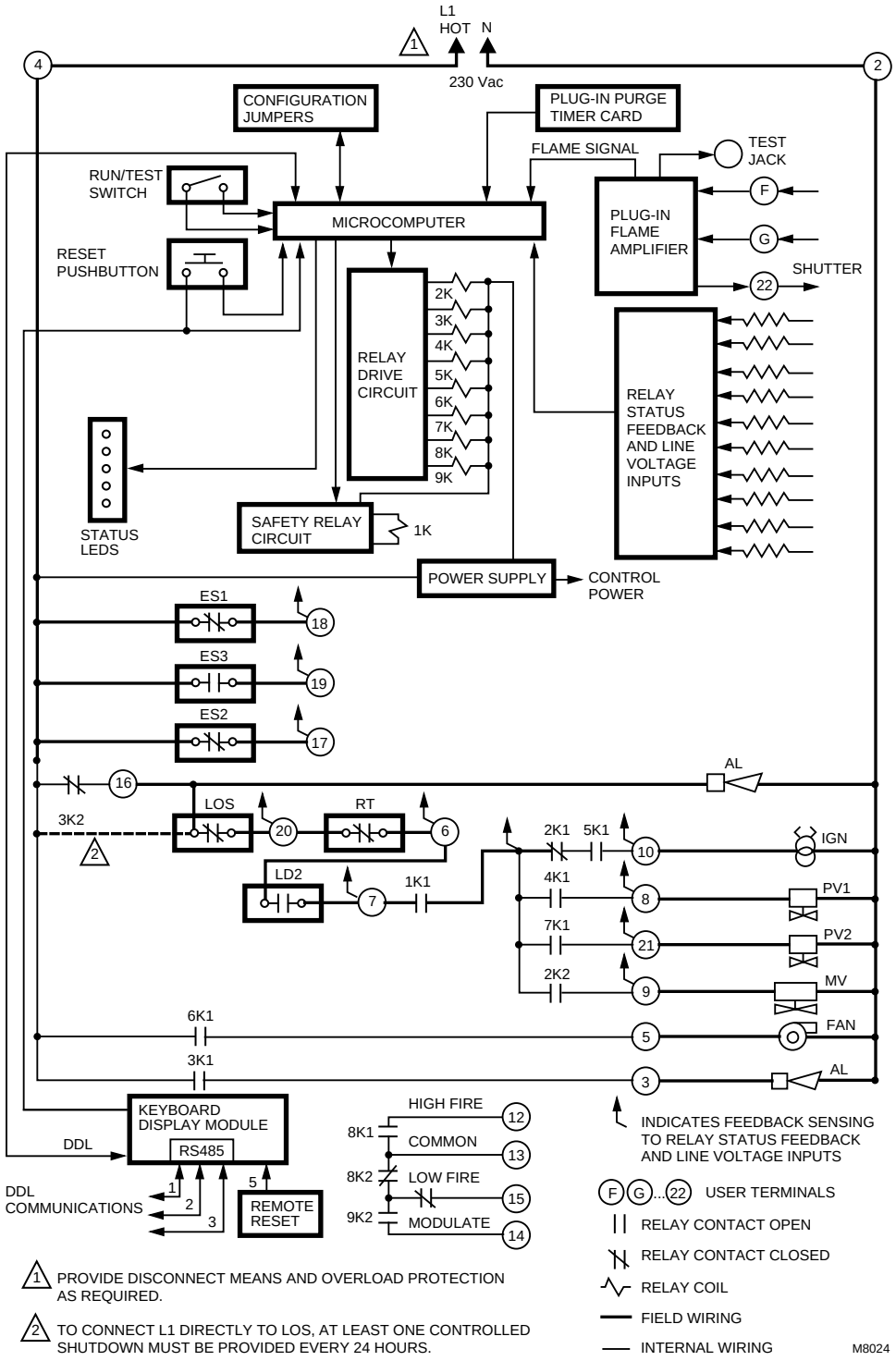

Fig. 3B. Internal block diagram of the EC7850A.

b. Keyboard Display Module, DATA CONTROL-BUS MODULE™ or Remote Reset Module—The shield, if used, should be connected to the signal ground terminal 3(c) provided as part of the 7800 SERIES device connection. Connect the shield at both ends to earth ground.
c. Relay Module—Each Relay Module will have an earth ground terminal that must be grounded to the metal control panel with wire as short as practical. Each ground wire must be capable of carrying a fault current equal to the rating of the protective fuse (20A). Wide straps or brackets are preferred rather than leadwires.

❺ Recommended wire routing:
a. Flame detector leadwires:
1. Do not run high voltage ignition transformer wires in the same conduit with the flame detection wiring.
2. Do not route flame detector wires in conduit with line voltage circuits.
3. Enclose flame detector wires without armor cable in metal cable or conduit.
4. Follow directions in flame detector Instructions.
b. DATA CONTROLBUS MODULE™:
1. Do not run high voltage ignition transformer wires in the same conduit or close proximity with the DATA CONTROLBUS MODULE™ wiring.
2. Do not route DATA CONTROLBUS MODULE™ wires in conduit with line voltage circuits.
c. Remote Reset:
1. Do not run high voltage ignition transformer wires in the same conduit with the Remote Reset wiring.
2. Do not route Remote Reset wires in conduit with line voltage circuits.

NOTE: A 13 Vdc power supply must be used any time more than one Keyboard Display Module is used.

❻ Maximum wire lengths:
a. Flame Detector leadwires—The maximum flame sensor leadwire length is limited by the flame signal strength.
b. Remote Reset leadwires—The maximum length of wire is 300 meters to a Remote Reset pushbutton.
c. DATA CONTROLBUS MODULE™—The maximum DATA CONTROLBUS MODULE™ cable length depends on the number of system modules connected, the noise conditions and the cable used. The maximum length of all interconnecting wire is 300 meters.

❼ Make sure loads do not exceed the terminal ratings. Refer to the label on the Relay Module or to the ratings in Specifications, see Table 1.

❽ Check the power supply circuit. The voltage and frequency tolerance must match those of the Relay Module. A separate power supply circuit may be required for the Relay Module. Add the required disconnect means and overload protection.

❾ Check all wiring circuits before installing the Relay Module on the subbase.

❿ Install all electrical connectors.

⓫ Restore power to the panel.

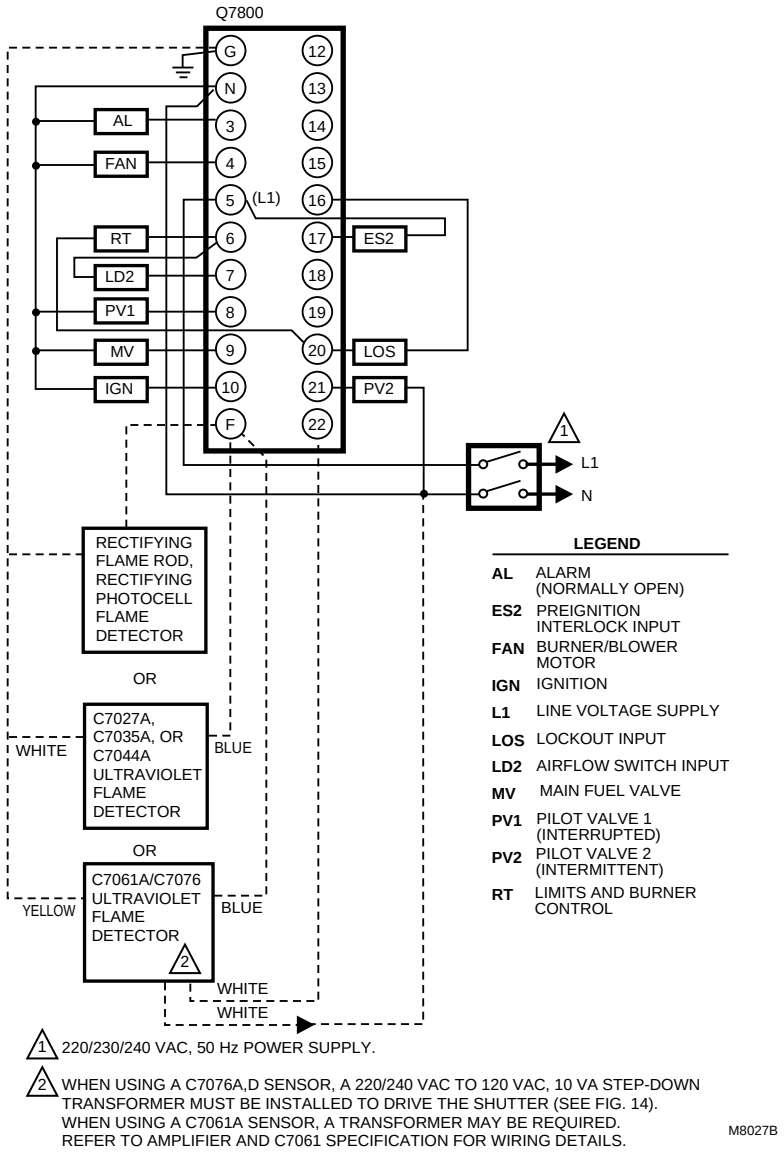

Fig. 4A. Wiring EC7830A.

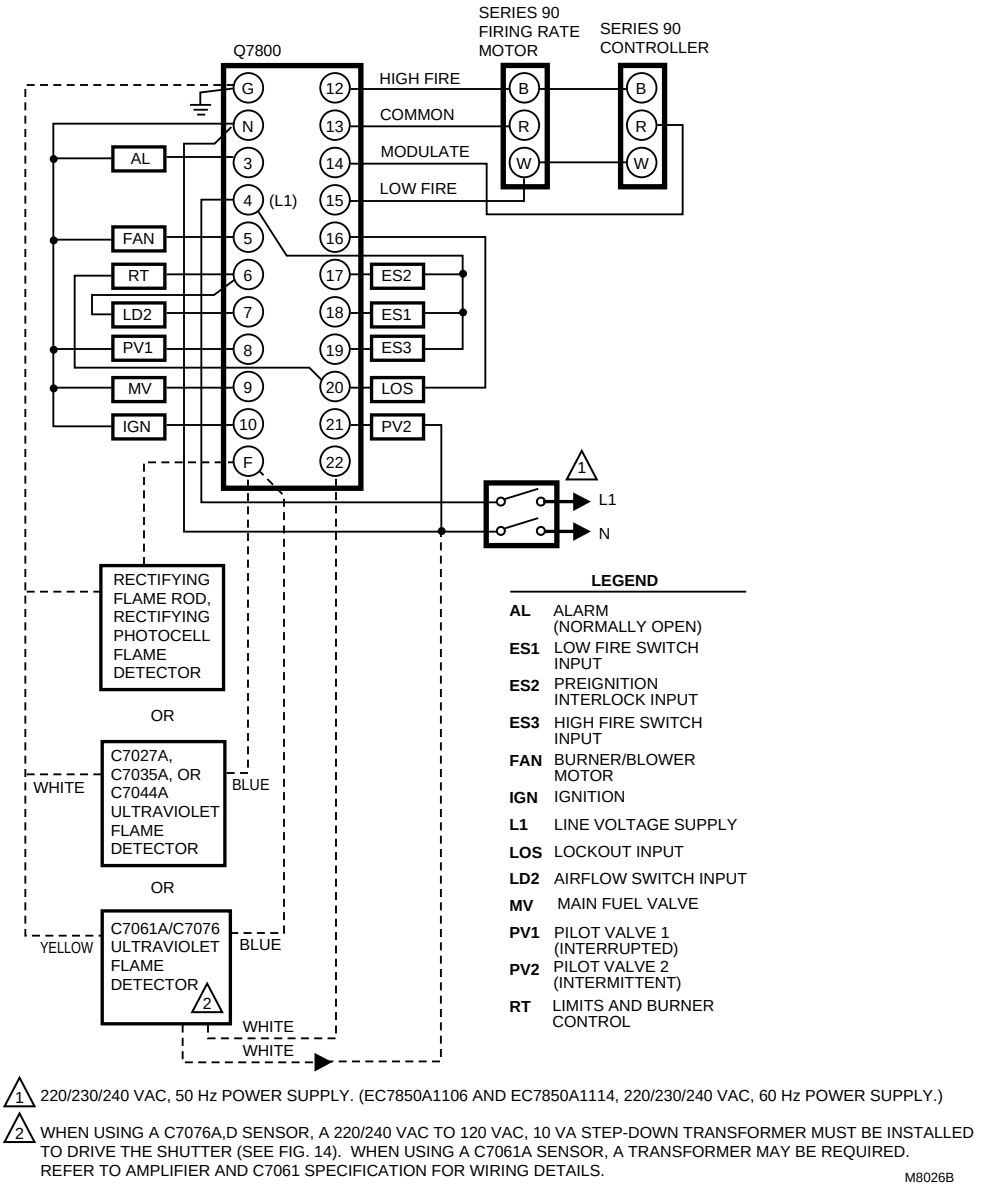

1 220/230/240 VAC, 50 Hz POWER SUPPLY. (EC7850A1106 AND EC7850A1114, 220/230/240 VAC, 60 Hz POWER SUPPLY.)

2 WHEN USING A C7076A,D SENSOR, A 220/240 VAC TO 120 VAC, 10 VA STEP-DOWN TRANSFORMER MUST BE INSTALLED TO DRIVE THE SHUTTER (SEE FIG. 14). WHEN USING A C7061A SENSOR, A TRANSFORMER MAY BE REQUIRED. REFER TO AMPLIFIER AND C7061 SPECIFICATION FOR WIRING DETAILS.

M8026B

Fig. 4B. Wiring EC7850A.

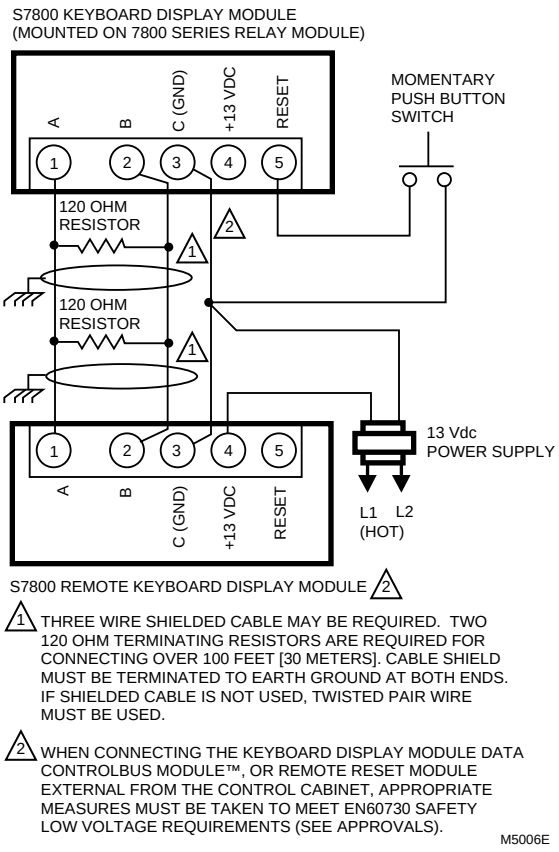

Fig. 5. Wiring multiple Keyboard Display Modules.

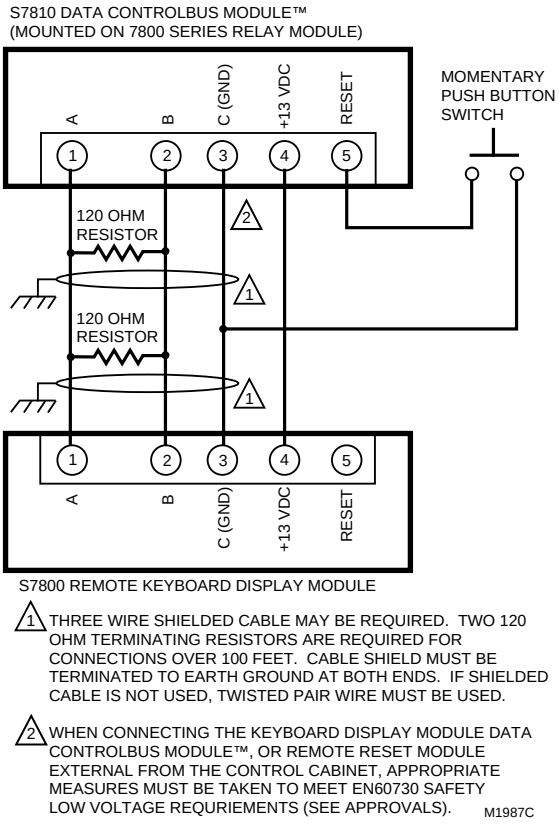

Fig. 6. Wiring the DATA CONTROLBUS MODULE™ with remote Keyboard Display Module.

Mounting Relay Module

NOTE: For installation dimensions, see Fig. 1 .

Relay Module Mounting

❶ Mount the Relay Module vertically, see Fig. 7, or mount horizontally with the knife blade terminals pointing downward. The Relay Module must be in an electrical enclosure.

❷ Select the location in the electrical enclosure. Be sure to allow adequate clearance for servicing, installation and removal of the Relay Module, Keyboard Display Module, flame amplifier, flame amplifier signal voltage probes, electrical signal voltage probes, and electrical connections.

a. Allow an additional 50 mm below the Relay Module for the flame amplifier mounting.

b. Allow an optional 75 mm minimum to both sides of the Relay Module for electrical signal voltage probes.

❸ Make sure no subbase wiring is projecting beyond the terminal blocks. Tuck wiring in against the back of the subbase so it does not interfere with the knife blade terminals or bifurcated contacts.

IMPORTANT

The Relay Module must be installed with a plug-in motion rather than a hinge action.

❹ Mount the Relay Module by aligning the four L shaped corner guides and knife blade terminals with the bifurcated contacts on the wiring subbase and tightening the two screws securely without deforming the plastic.

Installing ST7800A Purge Card

❶ Remove the Keyboard Display Module, DATA CONTROLBUS MODULE™ Extension Cable Assembly, or Dust Cover, see Fig. 8.

❷ Remove the current ST7800 from the Relay Module by pulling upward the plastic support cover.

❸ Make sure that the ST7800 selected has the desired timing.
❹ Insert the Purge Card into the opening of the Relay Module compartment, see Fig. 8.
❺ Reinstall the Keyboard Display Module or DATA CONTROLBUS MODULE™ onto the Relay Module and restore power to the device.
❻ Run the burner system through at least one complete cycle to verify the system is operating as desired.

Mounting Keyboard Display Module

❶ Align the two interlocking ears of the Keyboard Display Module with the two mating slots on the Relay Module, see Fig. 9.
❷ Insert the two interlocking ears into the two mating slots and with a hinge action push on the lower corners of the Keyboard Display Module to secure it to the Relay Module.
❸ Verify the Keyboard Display Module is firmly in place.

Mounting Data Controlbus Module™ and Extension Cable Assembly

❶ Align the two interlocking ears with the two mating slots on the Relay Module, See Figs. 10 and 11.
❷ Insert the two interlocking ears into the two mating slots and push on the lower corners of the DATA CONTROLBUS MODULE™ to secure it to the EC7830A, EC7850A.
❸ Be sure the DATA CONTROLBUS MODULE™ or Extension Cable Assembly is firmly in place.

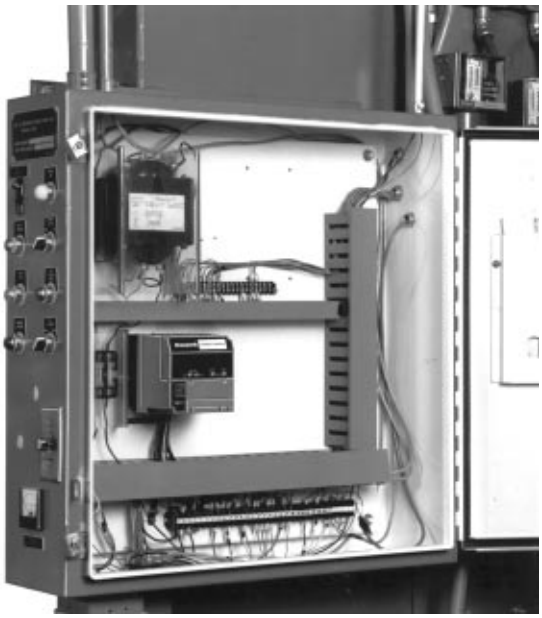

Fig. 7. Electrical panel installation.

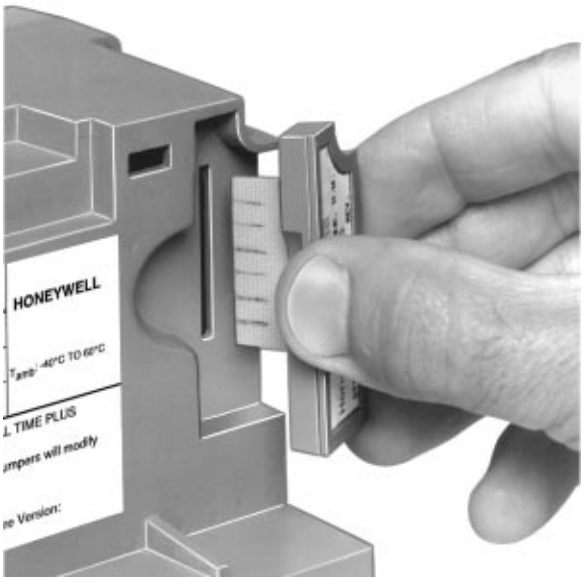

Fig. 8. ST7800 Purge Card installation.



Fig. 9. Keyboard Display Module mounting.



Fig. 10. DATA CONTROLBUS MODULE™ mounting.



Fig. 11. Extension Cable Assembly mounting.

Remote Mounting of Keyboard Display Module

❶ If permitted by application approval (see Approvals), the Keyboard Display Module can be mounted either on the face of a panel door or on other remote locations, see Fig. 12.

❷ When mounting the Keyboard Display Module on the face of a panel door, closely follow the instructions:
   a. Select the location on the door panel for flush mounting.
   b. Use the Keyboard Display Module as a template, see Fig. 23. Mark the two screw locations, two interlocking ear locations and the two plug-in connector locations. Drill the pilot holes for the mounting screws. Provide for two holes on the door panel for the interlocking ears and plug-in connector holes.
   c. Mount the Keyboard Display Module securing it with the two extra screws provided in a bag assembly with the Keyboard Display Module.

❸ When mounting the Keyboard Display Module on a wall or remote location, use the Remote Mounting Bracket, part no. 203765.
   a. Use the Remote Mounting Bracket as a template. Mark the four screw locations and drill the pilot holes. Mount the Remote Mounting Bracket by securing the four M3.5 x 0.6 screws, see Fig. 12.
   b. Mount the Keyboard Display Module by aligning the two interlocking ears with the two mating slots on the Remote Mounting Bracket.
   c. Insert the two interlocking ears with the two mating slots. Push on the lower corners of the Keyboard Display Module to secure it to the Remote Mounting Bracket.
   d. Verify the Keyboard Display Module is firmly in place.

Installing Plug-In Flame Signal Amplifier

❶ Disconnect power supply before beginning installaion to prevent electrical shock and equipment damage. More than one disconnect may be involved, see Fig. 13.

❷ Align the amplifier circuit board edge connector with the keyed receptacle on the Relay Module. Verify the amplifier nameplate faces away from the Relay Module.

❸ Push in the amplifier until the circuit board is fully inserted into the receptacle and then push the amplifier toward the Relay Module retaining clasp.

❹ Verify the amplifier is firmly in place.

❺ Perform all required checkout tests.

Installing the Flame Detector

NOTE: Table 2 lists the flame detection systems available for use with the Relay Module. Make sure the correct combination of amplifier and flame detector(s) is used.

Proper flame detector installation is the basis of a safe and reliable flame safeguard installation. Refer to the instructions packed with the flame detector and the equipment manufacturer instructions, see Fig. 14.

Keep the flame signal leadwires as short as possible from the flame detector to the wiring subbase. Capacitance increases with leadwire length, reducing the signal strength. The maximum permissible leadwire length depends on the type of flame detector, leadwire and conduit. The ultimate limiting factor of flame detector leadwire length is the flame signal, see Table 7.





Fig. 12. Remote mounting of Keyboard Display Module.

Run/Test Switch Functions

The Run/Test Switch is located on the top side of the Relay Module. The Run/Test Switch allows the burner sequence to be altered as follows:

1. In Purge Drive To High Fire position, the Run/Test Switch when placed in the TEST position, holds in PURGE with the firing rate motor in the High Fire position (EC7850A).
2. In the measured PURGE sequence, the Run/Test Switch, when placed in the TEST position, causes the PURGE timing to stop. The firing rate motor is in the High Fire position.
3. In Purge Drive to Low Fire position, the Run/Test Switch, when placed in the TEST position, holds the burner sequence in PURGE with the firing rate motor in the Low Fire position (EC7850A).
4. During the PILOT STAB., the Run/Test Switch, when placed in the TEST position, will stop the timer, allowing for pilot-turn-down test and other burner adjustments. This activates a fifteen second flameout timer that permits pilot flame adjustment without nuisance safety shutdowns.
5. During RUN, the Run/Test Switch, when placed in the TEST position, drives the firing rate motor to the Low Fire position.



Fig. 13. Flame signal amplifier mounting.

NOTE: When the Relay Module is switched to the TEST mode, it stops and holds at the next Run/Test Switch point in the operating sequence. *Make sure that the RUN/TEST SWITCH is in the RUN position before leaving the installation.*

Selectable Site-Configurable Jumpers

The EC7830A or EC7850A has three site-configurable jumper options, see Figure 15 and Table 4. The site-configurable jumpers should be clipped with side cutters and the resistors removed from the Relay Module. The EC7830A or EC7850A reads the settings of these configuration jumpers at startup. After 200 hours of Main Valve operation, the EC7830A or EC7850A locks the configuration jumper settings into its internal memory. If these jumpers are altered after the lock in occurs, the EC7830A or EC7850A will lockout. This safety function of the EC7830A or EC7850A helps assure that it cannot be modified after it is installed in a particular application.

If Jumper 3 (Airflow Switch) is intact (No Airflow Switch), then a jumper must be installed between Terminals 6 and 7. If Jumper 3 is clipped (Airflow Switch is present), the EC7830A or EC7850A will lockout if it detects a jumper between Terminals 6 and 7.

ПРОМЭЛЕКТРОНИКА / sales@prom-elec.com

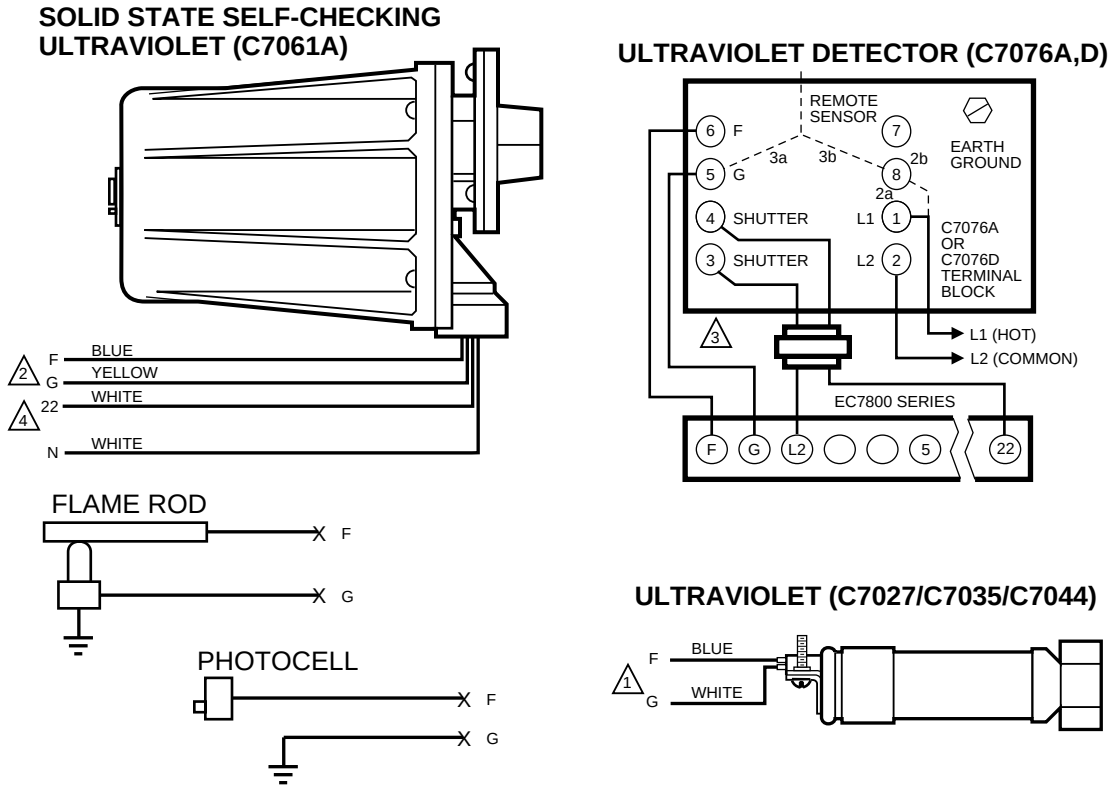

1 FLAME DETECTOR LEADS ARE COLOR CODED. THE BLUE LEAD MUST BE CONNECTED TO THE F TERMINAL AND THE WHITE MUST BE CONNECTED TO THE G TERMINAL. THE UV SENSING TUBE IS POLARITY SENSITIVE. REVERSING THE LEADS EVEN MOMENTARILY CAN DAMAGE OR DESTROY THE UV TUBE.

2 FLAME DETECTOR LEADS ARE COLOR CODED. THE BLUE LEAD MUST BE CONNECTED TO THE F TERMINAL AND THE YELLOW LEAD MUST BE CONNECTED TO THE G TERMINAL. THE UV SENSING TUBE IS POLARITY SENSITIVE. REVERSING THE LEADS EVEN MOMENTARILY CAN DAMAGE OR DESTROY THE UV TUBE.

3 220/240 VAC TO 120 VAC, 10 VA STEPDOWN TRANSFORMER (NOT PROVIDED) MUST BE INSTALLED TO DRIVE THE SHUTTER.

4 A 220/240 VAC TO 120 VAC, 10 VA STEPDOWN TRANSFORMER MAY BE REQUIRED. REFER TO THE AMPLIFIER AND FLAME DETECTOR INSTRUCTIONS.

M4711A

Fig. 14. Flame detector wiring.

Table 4. Site Configurable Jumper Options.

Jumper Number	Description	Intact	Clipped
JR1	First Safety Time	5 seconds	3 seconds
JR2	Main Trial Time	5 seconds	3 seconds
JR3	Airflow Switch	No	Yes

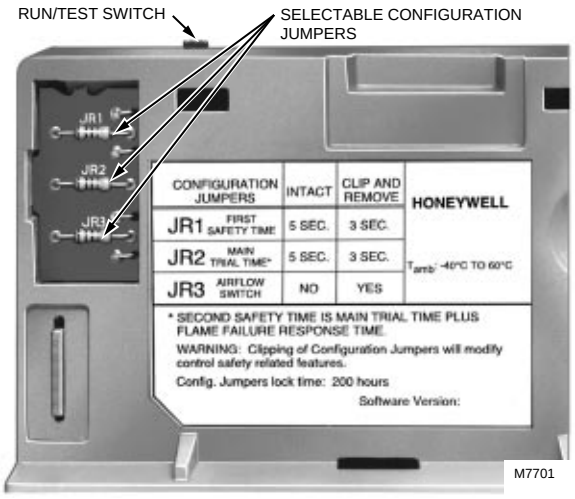

Fig. 15. Selectable site-configurable jumpers.

OPERATION

Sequence of Operation

The EC7830A or EC7850A Relay Module has the following operating sequences, see Fig. 16 and Table 5.

Initiate

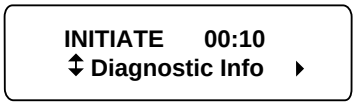

M1994

The EC7830A or EC7850A enters the INITIATE sequence when the Relay Module is powered. The EC7830A or EC7850A can also enter the INITIATE sequence if the Relay Module verifies voltage fluctuations of +10/-15% or frequency fluctuations of +/-10% during any part of the operating sequence. The INITIATE sequence lasts for two seconds unless the voltage or frequency tolerances are not met. When the tolerances are not met, a hold condition will be initiated and will be displayed on the display for at least five seconds. When the tolerances are met, the INITIATE sequence will restart. If the condition is not corrected and the hold condition exists for four minutes, the EC7830A or EC7850A will lockout. Causes for hold conditions in the INITIATE sequence:

a. AC line dropout is detected.
b. AC line frequency error caused by using a 60 Hz device on a 50 Hz line, or vice versa.
c. AC line noise that can prevent a sufficient reading of the line voltage inputs.
d. Brownouts caused by a low line voltage.
e. AC line phase is incorrect. L1 and N are miswired.

The INITIATE sequence also delays the burner motor starter from being energized and de-energized from an intermittent AC line input or control input.

Standby

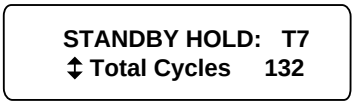

M1995

The EC7830A or EC7850A is ready to start an operating sequence when the operating control determines a *call for heat* is present. The burner switch, limits, operating control and all microcomputer monitored circuits must be in the correct state for the EC7830A or EC7850A to continue into the PURGE sequence.

Normal Start-Up Purge

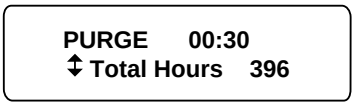

M1996

The EC7830A or EC7850A provides a PURGE timing selectable from two seconds to 30 minutes with power applied and the Relay Module operating control indicating a c*all for heat:*

a. Preignition Interlocks, Limits and Burner Control, Run/Test Switch, Airflow Switch Input, Lockout Input and all microcomputer monitored circuits must be in the correct operating state.
b. The blower motor output, terminal 5, is powered to start the PURGE sequence. The firing rate motor is driven to the high fire position (EC7850A). The PURGE timing does not begin until the Airflow Switch Input and High Fire Switch (EC7850A) are both closed.
c. The Preignition Interlock input must remain closed throughout PURGE; otherwise, a safety shutdown occurs.
d. The Airflow Switch Input must close by ten seconds into PURGE; otherwise, a safety shutdown occurs.
e. After the firing rate motor reaches the PURGE rate position and PURGE timing is completed, the firing rate motor will drive to the low fire position (EC7850A).
f. When the firing rate motor reaches the low fire position, the Low Fire Switch, terminal 18, input must be energized before entering the Ignition Trial state (EC7850A).

Ignition Trials



M3923

a. Preignition: With the firing rate motor at the low fire position (EC7850A), the ignition transformer, terminal 10, is energized for 3 seconds.
b. First Safety Time (SAFETY1):
    1. With the firing rate motor at the low fire position (EC7850A):
        a. The pilot valves and ignition transformer, terminals 8, 10 and 21, are energized. Terminal 8 is an interrupted pilot valve whereas terminal 21 is an intermittent pilot valve.
        b. During SAFETY1, the Low Fire Switch Input must be closed. If it opens, a safety shutdown occurs (EC7850A).
        c. The Preignition Interlock Input is ignored during SAFETY1, PILOT STAB., MAIN TRIAL, RUN and POSTPURGE.
    2. Flame must be proven by the end of three or five seconds to allow the sequence to continue. A safety shutdown occurs if there is no flame.

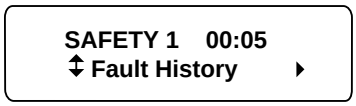

M3924

c. Pilot stabilization (PILOT STAB.): With flame proven, the ignition, terminal 10 is de-energized. The duration of this state is 5 seconds.

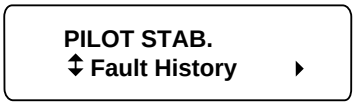

M3925

d. Main Trial (MAIN TRIAL):
    1. The MAIN TRIAL time is selectable as three or five seconds. After PILOT STAB., and with the presence of a flame, the main fuel valve, terminal 9 is powered. If a flame out occurs, the Relay Module will lockout within 1 or 2 seconds, depending on the Flame Failure Response Time (FFRT) of the amplifier. Thus, second safety time is defined to be MAIN TRIAL time plus FFRT of the amplifier.



M3926

EC 7830A Power Burner ON/OFF, GAS or OIL Sequence

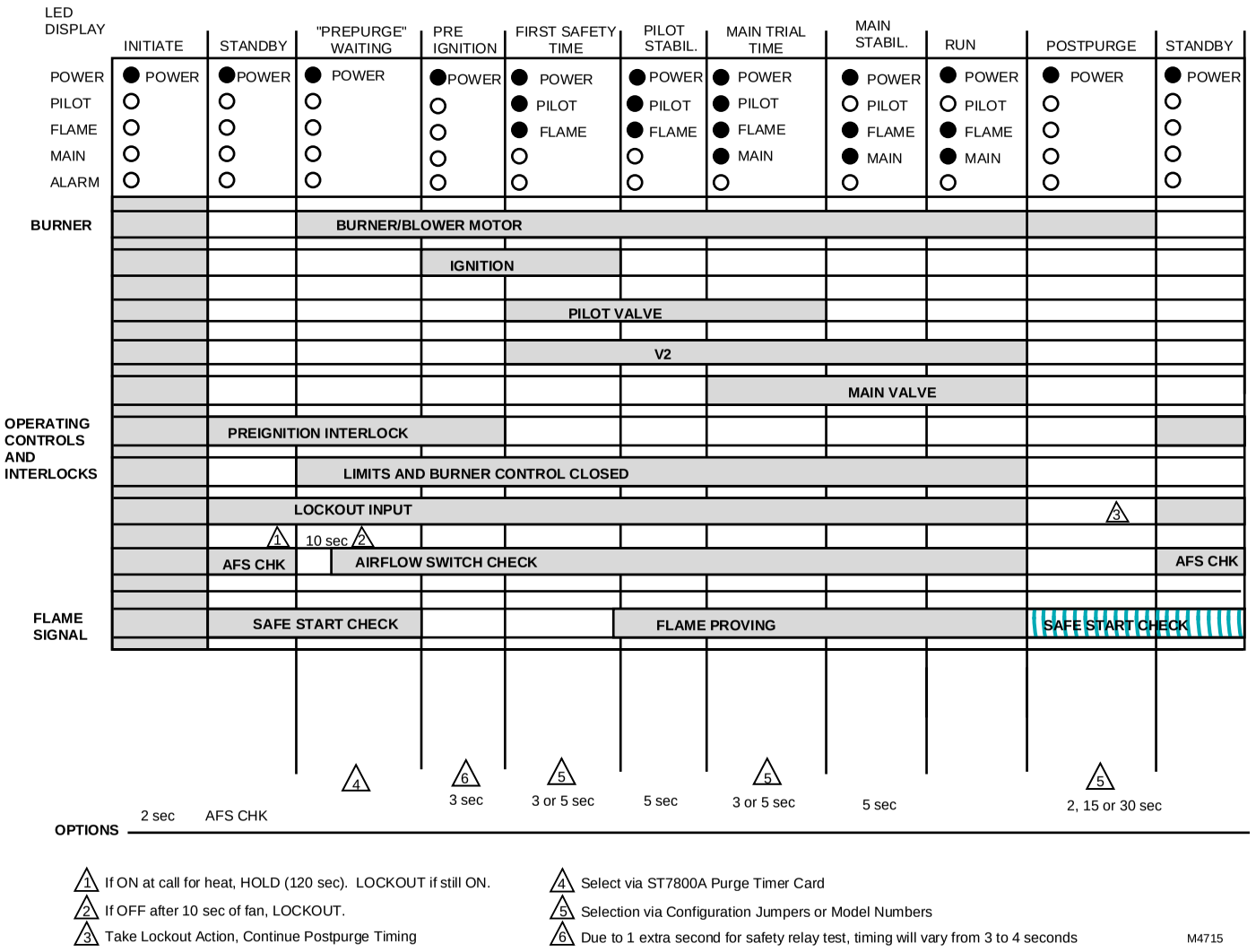

Fig. 16A. EC7830A Power Burner, On/Off, Gas or Oil Sequence.

EC 7850A Power Burner Full Modulation, GAS or OIL Sequence

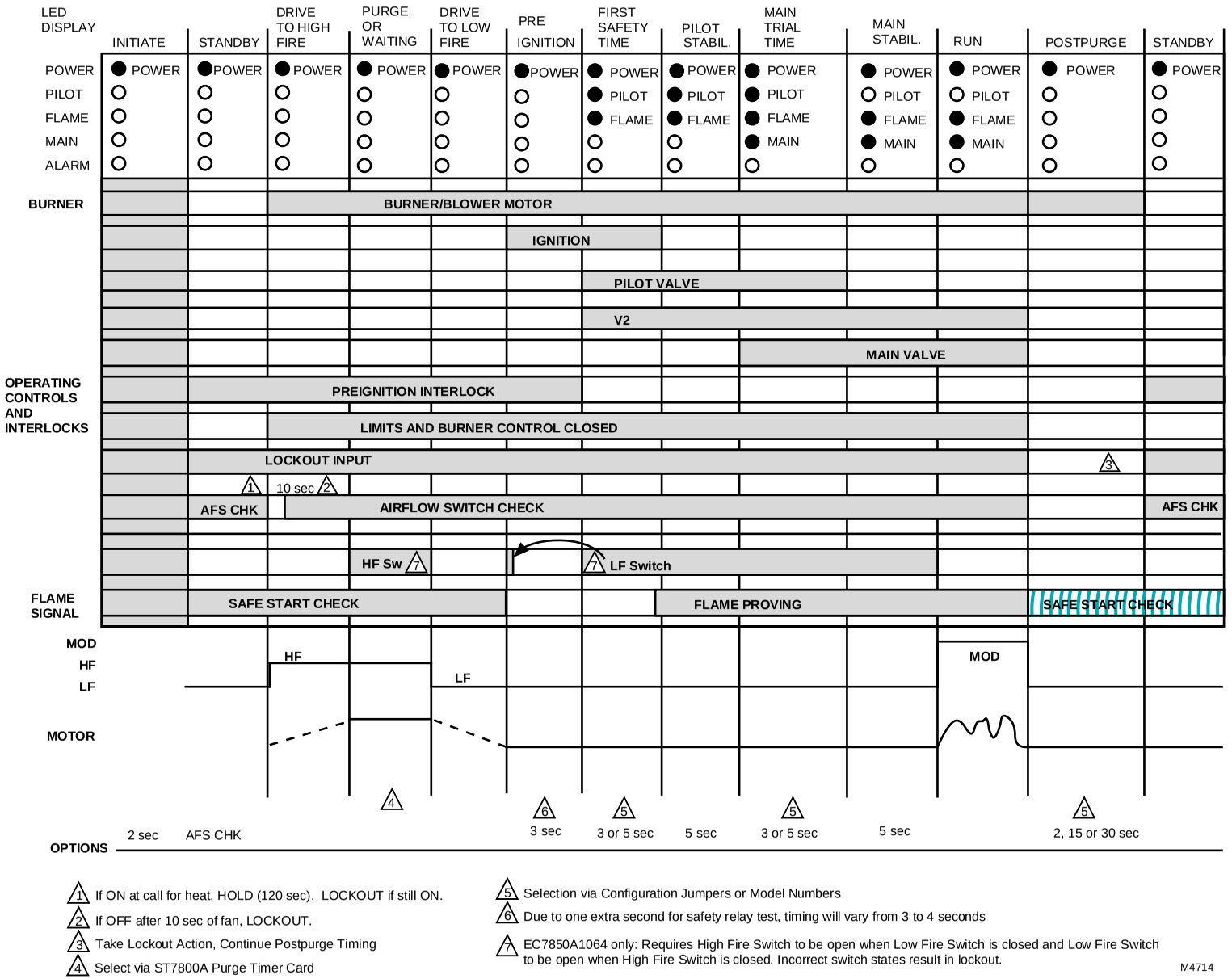

1. If ON at call for heat, HOLD (120 sec). LOCKOUT if still ON.
2. If OFF after 10 sec of fan, LOCKOUT.
3. Take Lockout Action, Continue Postpurge Timing
4. Select via ST7800A Purge Timer Card
5. Selection via Configuration Jumpers or Model Numbers
6. Due to one extra second for safety relay test, timing will vary from 3 to 4 seconds
7. EC7850A1064 only: Requires High Fire Switch to be open when Low Fire Switch is closed and Low Fire Switch to be open when High Fire Switch is closed. Incorrect switch states result in lockout.

M4714

Fig. 16B. EC7850A Power Burner, Full Modulation, Gas or Oil Sequence.

2. During MAIN TRIAL, the Low Fire Switch Input must be closed (EC7850A). If it opens, a safety shutdown occurs.
3. After three or five seconds of MAIN TRIAL, terminal 8 is de-energized for main stabilization. Flame must remain proven during this period of five seconds.

Run

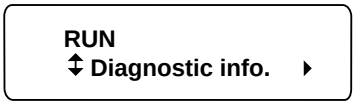

M1999A

❶ The firing rate motor releases to modulation.

❷ The Relay Module is now in RUN and will remain in RUN until the controller input, terminal 6, opens, indicating that the demand is satisfied or a limit has opened.

Postpurge



M3968

The EC7830A or EC7850A provides a two, fifteen, or thirty second POSTPURGE following the completion of the RUN period. The blower motor output is powered to drive all products of combustion and any unburned fuel from the combustion chamber. It also supplies combustion air to burn fuel being purged from the fuel line downstream of the fuel shutoff valve.

❶ The main fuel valve and intermittent pilot valve, terminals 9 and 21, are de-energized and the firing rate motor is commanded to the low fire position (EC7850A) to begin the POSTPURGE period.

❷ The Preignition Interlock Input is ignored during POSTPURGE.

❸ After the POSTPURGE period is completed, the Relay Module reenters STANDBY.

Keyboard Display Module

The first line of the Vacuum Fluorescent Display (VFD) provides current status of the burner sequence (STANDBY, PURGE, PREIGNITION, SAFETY1, PILOT STAB., MAIN TRIAL, RUN and POSTPURGE), timing information (PURGE, SAFETY1, MAIN TRIAL and POSTPURGE) in minutes and seconds, hold information (PURGE HOLD: T19) and lockout information (Lockout, Fault Code, Message and Sequence), see Fig. 17. The extreme right side of the first line will either be blank or it will show a small arrow pointing to the second line followed by a two-letter code (DI—Diagnostic Information and Hn—Fault History Information). When the arrow and two-letter code are displayed, it indicates the second line is showing a selectable message submenu. The second line will display selectable or preemptive messages. A selectable message supplies information for flame strength, system status indication, system or self-diagnostics and troubleshooting (see Table 6). A preemptive message will have parentheses around the message and supply a detailed message to support the sequence status information. A preemptive message can also be a lockout message. A preemptive message will replace a selectable message to support the sequence status information. It will also replace a selectable message after 60 seconds if it or a lockout message is available. The Relay Module LEDs provide positive visual indication of the program sequence: POWER, PILOT, FLAME, MAIN and ALARM.

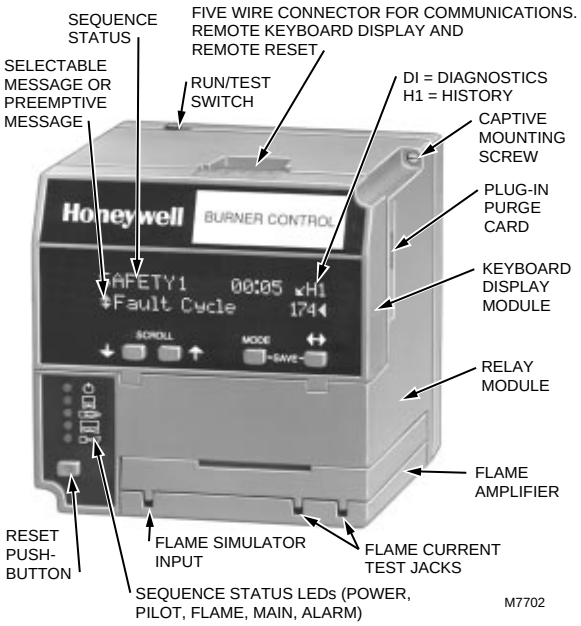

Fig. 17. Keyboard Display Module and sequence status LEDs (Table 5).

Table 5. Sequence Status Display Information (See Fig. 17).

NOTE: Normal sequences are in **BOLD TYPE**, while abnormal sequences are not in bold type.

Burner Sequence	LEDs Energized
INITIATE minutes: seconds ↕ selectable—message	
INITIATE HOLD: AC (AC Freq/Noise)	
INITIATE HOLD: AC (AC Line Dropout)	
INITIATE HOLD: AC (AC Frequency)	
INITIATE HOLD: AC (Low Line Voltage)	
INITIATE HOLD: AC (Low Line Voltage)	
STANDBY ↕ selectable—message	
STANDBY HOLD: REM (Remote Control)	
STANDBY HOLD: F/G (Flame Detected)	
STANDBY HOLD: T17 (Preignition ILK)	
STANDBY HOLD: T7 (Airflow Switch)	
PURGE HOLD: T19 (EC7850A ONLY) (High Fire Switch)	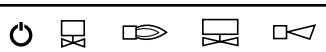
PURGE HOLD: TEST (Run/Test Switch)	
PURGE HOLD: F/G (Flame Detected)	
PURGE HOLD: T18 (EC7850A ONLY) (Low Fire Switch)	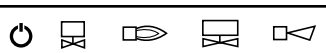
PURGE minutes: seconds ↕ selectable—message	
PURGE HOLD: T7 (Airflow Switch)	
PREIGNITION ↕ selectable—message	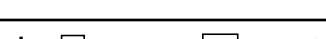
SAFETY 1 minutes: seconds ↕ selectable—message	
PILOT HOLD: TEST (Run/Test Switch)	
PILOT STAB. ↕ selectable—message	
MAIN TRIAL minutes: seconds ↕ selectable—message	
MAIN TRIAL ↕ selectable—message	
RUN ↕ selectable—message	
RUN LOWFIRE: TEST (Run/Test Switch)	
POSTPURGE minutes: seconds ↕ selectable—message	
Waiting for connection... RESET/ALARM TEST ↕ selectable—message	

M8030

Keyboard Functions

The keyboard contains four pushbuttons and each has separate functions (SCROLL-Down, SCROLL-Up, MODE and Change-Level). The MODE and Change-Level pushbuttons, when pressed together, provide a SAVE function.

❶ SCROLL Down-Up pushbuttons (◊), see Fig. 18.

The SCROLL Down-Up pushbuttons (◊) are used to scroll through the selectable messages. The doubleheaded arrow (◊), which is located in the lower left position of the second line of the display, represents the SCROLL Down-Up pushbuttons. The SCROLL Down-Up pushbuttons (◊) can be pressed to display selectable messages one at a time or held down to scroll through the selectable messages at a rate of two per second. When the last item of the selectable message is viewed, the display wraps around and displays the first selectable message again.

❷ Change-Level pushbutton (↔), see Fig. 19.

The Change-Level pushbutton is used to change between the first hierarchy of selectable messages to a subset of selectable messages. The Change-Level pushbutton can also be used to change from a subset message to a first level selectable message. The symbol (>) located on the second line in the lower right corner of the display represents a first level hierarchy of selectable messages. The symbol (<) located on the second line in the lower right corner of the display represents a subset of selectable messages.

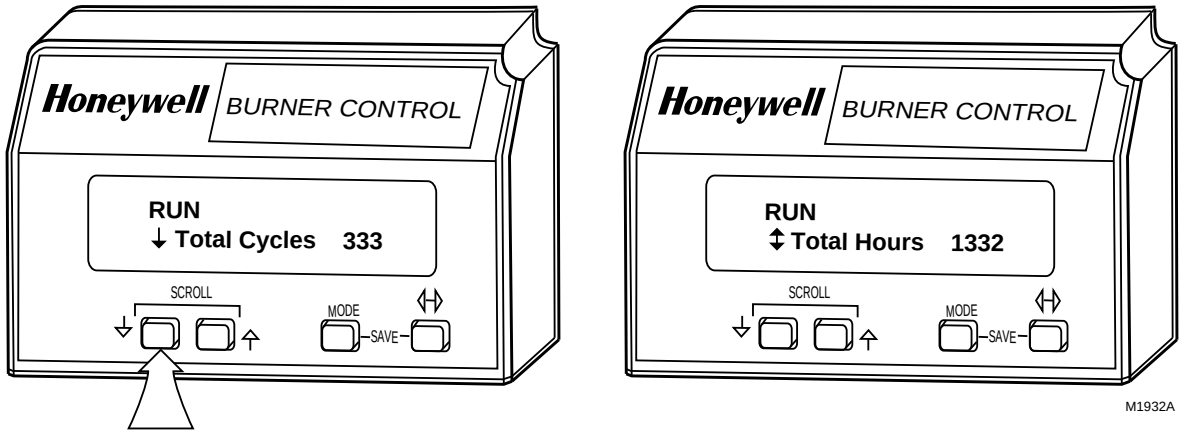

Fig. 18. (◊) SCROLL pushbutton function.

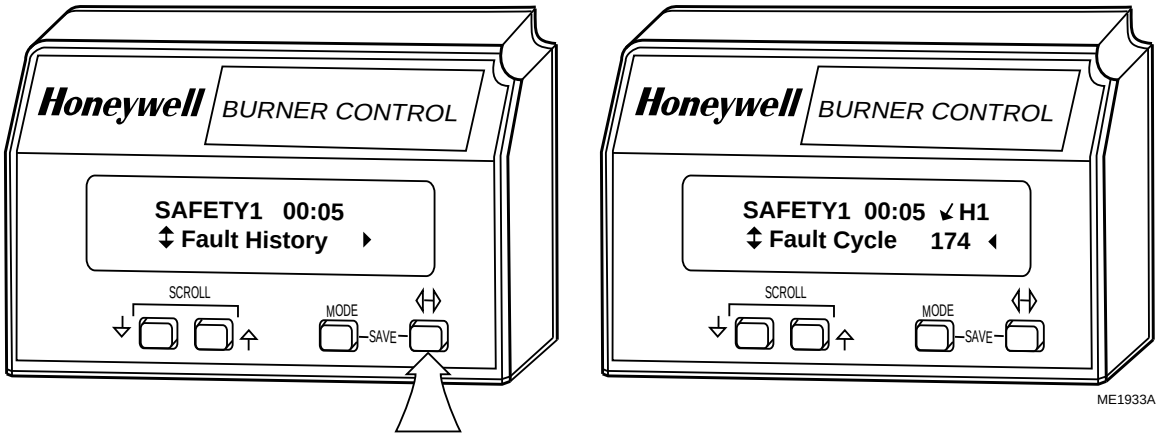

Fig. 19. (↔) Change-Level pushbutton function.

❸ Mode pushbutton, see Fig. 20.

The MODE pushbutton instantaneously switches the display from a *second-line-selectable* message to *second-line-preempted* message. The sixty second timeout function also can be used for this task. The MODE pushbutton will work only if there is a *second-line-preempted* message or lockout message.

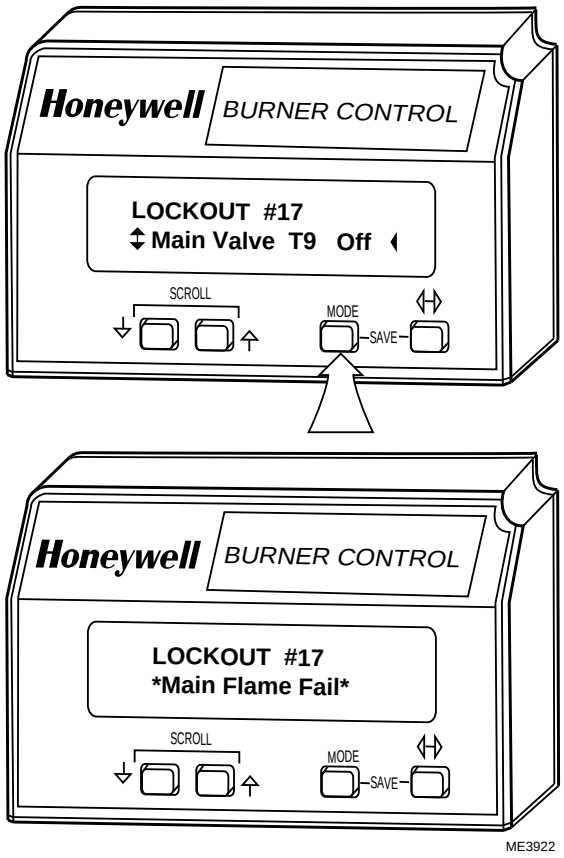

Fig. 20. MODE pushbutton function.

❹ Save function, see Fig. 21.

The SAVE function enables users to identify the selectable message they want to view upon power restoration. The second line selectable message will be restored to the most recently saved selection when power returns. The SAVE function is performed by pressing and holding the MODE key and then pressing the Change-Level pushbutton (↔). The second line of the display will briefly note "…SAVING…" to confirm the key press.

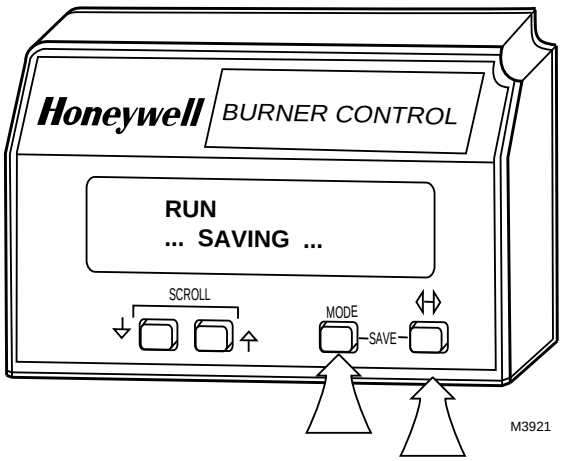

Fig. 21. SAVE function.

Selectable Messages

Keyboard Display Module Second Line Display, Two-Level Hierarchy, see Table 6.

The display values are as follows:

n represents a numbered value.
T represents the terminal number.
x represents the suffix letter of the Relay Module.

Table 6. Selectable Messages.

Selectable Message (Second Line)		Display Value (Second Line)	First Line Message
↕Flame Signal		n.nV	
↕Total Cycles		nnnnn	
↕Total Hours		nnnnn	
↕Fault History ©			
↕Fault Cycle		nnnnn	↓H1
↕Fault Hours		nnnnn	↓H1
↕Fault Code		nnn	↓H1
↕*fault —message*			↓H1
↕sequence—message			↓H1
↕(second-line-msg)			↓H1
↕Fault Cycle		nnnnn	↓H2
↕Fault Hours		nnnnn	↓H2
↕Fault Code		nnn	↓H2
↕*fault —message*			↓H2
↕sequence—message			↓H2
↕(second-line-msg)			↓H2
↕Fault Cycle		nnnnn	↓H3
↕Fault Hours		nnnnn	↓H3
↕Fault Code		nnn	↓H3
↕*fault —message*			↓H3
↕sequence—message			↓H3
↕(second-line-msg)			↓H3
↕Fault Cycle		nnnnn	↓H4
↕Fault Hours		nnnnn	↓H4
↕Fault Code		nnn	↓H4
↕*fault —message*			↓H4
↕sequence—message			↓H4
↕(second-line-msg)			↓H4
↕Fault Cycle		nnnnn	↓H5
↕Fault Hours		nnnnn	↓H5
↕Fault Code		nnn	↓H5
↕*fault —message*			↓H5
↕sequence—message			↓H5
↕(second-line-msg)			↓H5
↕Fault Cycle		nnnnn	↓H6
↕Fault Hours		nnnnn	↓H6
↕Fault Code		nnn	↓H6
↕*fault —message*			↓H6
↕sequence—message			↓H6
↕(second-line-msg)			↓H6
↕Diagnostic Info ©			
↕Device		EC78nnx	↓DI
↕Device Suffix		nnnn	↓DI
↕Run/Test Switch (Run/Test Sw.)		RUN or TEST	↓DI
↕Operating Control (OperControl)	T6	ON or OFF	↓DI
↕Airflow Interlock (Airflow ILK)	T7	ON or OFF	↓DI
↕Interrupted Pilot Valve (Intrptd PV)	T8	ON or OFF	↓DI
↕Main Valve	T9	ON or OFF	↓DI
↕Ignition	T10	ON or OFF	↓DI
↕Low Fire Switch (LowFire Sw)	T18	ON or OFF	↓DI
↕High Fire Switch (HighFireSw)	T19	ON or OFF	↓DI
↕Preignition Interlock (PreIgn ILK)	T17	ON or OFF	↓DI
↕Intermittent Pilot Valve/(Intmitt PV)	T21	ON or OFF	↓DI
↕Jumper 1		INTACT or CLIPPED	↓DI
↕Jumper 2		INTACT or CLIPPED	↓DI
↕Jumper 3		INTACT or CLIPPED	↓DI
↕Amplifier Type (Amp Type)		STANDARD or AMPLI-CHECK™ or SHUTTER	↓DI
↕Flame Response		1s or 2s	↓DI
↕Purge Time		mm:ss	↓DI
↕Manufacturing Code (Mfg Code)		nnnn	↓DI
↕Software Revision (SW Rev.)		nnnn/nnnn	↓DI
↕Remote Command		NONE/HOLD/HF/LF	

CHECKOUT

Equipment Recommended

Volt-ohmmeter (1M ohm/volt minimum sensitivity) with:

- 0-300 Vac capability.
- 0-6000 ohm capability.
- 0-10 Vdc capability.

Flame Signal Measurement (Table 7 and Fig. 22)

Measure the flame signal at the appropriate times as defined in the following Checkout tests. Read the flame signal in volts dc at the flame amplifier test jacks + and (Com) or at the Keyboard Display Module.

1. Use 1M ohm/volt meter with a 0 to 10 Vdc capability.
2. Set the 1M ohm/volt meter to the 0 to 10 Vdc range.
3. Insert the positive (red) probe into the + jack of the flame amplifier. Insert the negative (black) probe into the (Com) jack of the flame amplifier, see Fig. 22.
4. Allow a few seconds for the meter reading to stabilize.
5. If using AMPLI-CHECK™ or shutter check amplifiers, read the average stable voltage, disregarding the peaks and valleys caused by the self-checking operation.
6. The meter reading must be as specified in Table 7, after all tests are completed and all adjustments made.

As an option, the flame signal can be checked by using the Keyboard Display Module.

If the signal is unstable or less than the minimum acceptable voltage, check flame detector installation and circuitry.

Table 7. Flame Signal.

Flame Detector	Flame Signal Amplifier	Minimum Steady dc Voltage [a]	Maximum Expected dc Voltage
Flame Rod Photocell	R7847A,B[b]	1.25 Vdc	5.0 Vdc at Keyboard Display Module
C7027A C7035A C7044A	R7849A,B[b]		OR 5.0 Vdc at 1M ohm/volt meter
C7061A	R7861A[c,d]		
C7076	R7886[c,d]		

[a] This minimum or stronger signal should easily be obtained if the detector is correctly installed and positioned to properly sense the flame. This voltage must be obtained before completing checkout.
[b] The flame amplifiers are AMPLI-CHECK™ type.
[c] The flame signal amplifier circuitry is tested one-half second every five seconds during burner operation and shuts down the burner if the amplifier fails (all installations).
[d] The flame amplifiers are self-check type.

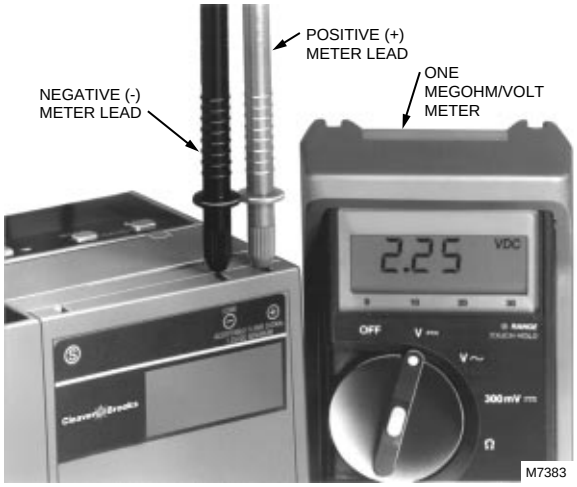

Fig. 22. Flame signal measurement.

TROUBLESHOOTING

EC7800 Series System Diagnostics

Troubleshooting control system equipment failures is made easier with the EC7800 SERIES self-diagnostics and first-out annunciation. In addition to two isolated spst alarm relays (audible annunciation), the EC7800 SERIES provides visual annunciation by displaying a fault code and fault or hold message at the Keyboard Display Module 2 row by 20 column VFD. The EC7800 SERIES provides 61 diagnostic messages for troubleshooting the system (see the attached list in Table 8).

Self-diagnostics of the Relay Module enable it to detect and annunciate both external and internal system problems. Internal faults and external faults such as interlock failures, flame failures and false flame signals are annunciated by the Relay Module, which energizes the ALARM LED, or visually displayed at the Keyboard Display Module VFD.

The Keyboard Display Module displays a sequence status message indicating: STANDBY, PURGE, PREIGNITION, SAFETY1, PILOT STAB., MAIN TRIAL, RUN and POSTPURGE. The selectable messages also provide visual indication of current status and historical status of the equipment such as: Flame Signal, Total Cycles, Total Hours, Fault History and Diagnostic Information. With this information, most problems can be diagnosed without extensive trial and error testing.

Table 5 provides the sequence and status hold messages. Table 8 provides a summary of all Relay Module fault messages and fault codes. In addition, Diagnostic Information and History Data are available to assist in troubleshooting the Relay Module; see Table 6.

The Relay Module provides diagnostic information to aid the service mechanic in obtaining information when troubleshooting the system; see Tables 5, 6, and 8.

Information available in the Diagnostic Information includes Device Type, Device Suffix, Software Revision (Display/Relay Module), Manufacturing Code, Flame Amplifier Type, Flame Failure Response Time, Selectable Jumper Configuration Status, Run/Test Switch Status and Terminal Status.

Diagnostic Information Index

The Relay Module monitors input/output terminals and can display the status of the terminal at the Keyboard Display Module (example: Pilot Valve T8 ON). See Table 6 for a complete terminal description and number. The display will show the actual status of the terminal. If voltage is detected at the terminal, ON is displayed, but if no voltage is detected at the terminal, OFF is displayed.

Historical Information Index

The Relay Module has nonvolatile memory that allows it to retain Historical Information for the six most recent lockouts. Each of the six lockout files retains the cycle when the fault occurred, the hour of operation when the fault occurred, a fault code, a fault message and burner status when the fault occurred; see Table 6.

SERVICE NOTE: If the Keyboard Display Module is *scrambled*, remove and reinstall the Keyboard Display Module, and reset the EC7800 SERIES Relay Module.

SERVICE NOTE: Reset the Relay Module by pressing the reset pushbutton on the Relay Module, or pressing a remote reset pushbutton wired through the Keyboard Display Module, DATA CONTROLBUS MODULE™ or Remote Reset Module. Note that Remote Reset is subject to application approval. A power-up reset will cause an electrical reset of the Relay Module but will not reset a lockout condition.

SERVICE NOTE: Use the access slots on the sides of the Q7800A to check terminal voltage.

Table 8. Hold and Fault Message Summary.

Fault Number	Annunciation Message	Description
Fault 1	***No Purge Card***	Purge card problem.
Fault 2	***AC Frequen/Noise***	Lockout due to inability to take minimum number of samples.
Fault 3	***AC Line Dropout***	Lockout due to AC line dropout detected.
Fault 4	***AC Frequency***	Lockout due to AC line frequency too fast.
Fault 5	***Low Line Voltage***	Lockout due to insufficient AC line voltage.
Fault 6	***Purge Card Error***	Purge card parity is bad.
Fault 7	***Flame Amplifier***	Flame sensed when checked for ampli-check system.
Fault 8	***Flame Amp/Shutr***	Flame sensed when checked for shutter-check system.
Fault 9	***Flame Detected***	Flame detected during Standby and time limit has expired).
Fault 10	***Preignition ILK***	Preignition interlock open during Standby and time limit has expired.
Fault 13	***Airflow Sw. On***	Airflow switch shorted and limit has expired in Standby (demand was present)
Fault 14	***High Fire Sw***	High Fire switch open and time limit has expired during prepurge.
Fault 15	***Flame Detected***	Flame sensed when shutter open and no flame is expected during Standby.
Fault 17	***Main Flame Fail***	Main flame failure during Run after flame has been on for a while.
Fault 18	***Flame Detected***	Flame detected during Purge or Waiting, when no flame should exist.
Fault 19	***Main Flame Ign.***	Flame loss detected, main flame did not ignite or failed during first 10s of Run.
Fault 20	***Low Fire Sw. Off***	Low Fire switch open and time limit has expired during Waiting.
Fault 23	***Airflow Switch***	Combustion airflow interlock fault during Waiting.
Fault 24	***Internal Fault***	Flame interlock is enabling fuel valves and no flame is present.
Fault 25	***Internal Fault***	Flame interlock feedback indicates it is not enabling main valve.
Fault 28	***Pilot Flame Fail***	Pilot flame failure.
Fault 31	***Low Fire Sw. Off***	Low fire interlock switch failure to close during Run.
Fault 32	***Airflow Switch***	Airflow switch failed to make or opened.
Fault 33	***Preignition ILK***	Preignition interlock opened.
Fault 35	***Internal Fault***	Safety relay feedback showed off when it should be on.
Fault 36	***Internal Fault***	Main valve relay feedback showed off when it should be on.
Fault 37	***Internal Fault***	Pilot valve relay feedback showed off when it should be on.
Fault 38	***Internal Fault***	Ignition relay feedback showed off when it should be on.
Fault 39	***Internal Fault***	Pilot valve 2 relay showed off when it should be on.
Fault 40	***Internal Fault***	Safety relay feedback showed on when it should be off.
Fault 41	***Main Valve On***	Main valve relay feedback showed on when it should be off.
Fault 42	***Pilot Valve 1 On***	Pilot valve relay feedback showed on when it should be off.
Fault 43	***Ignition On***	Ignition relay feedback showed on when it should be off.
Fault 44	***Pilot Valve 2 On***	Pilot valve 2 relay feedback showed on when it should be off.
Fault 45	***Low Fire Sw. Off***	Low fire switch opened.
Fault 46	***Flame Amp Type***	Type and/or FFRT has changed since initial read.
Fault 47	***Jumpers Changed***	Field jumpers have changed since initial read.
Fault 50	***Jumpers Wrong***	Illegal jumper combination selected (as defined by the burner sequence).
Fault 51	***Flame Too Strong***	Measured flame signal is to strong.
Fault 52	***Internal Fault***	Pilot valve 2 relay feedback showed off when it should be on.

Table 8. Hold and Fault Message Summary *(Continued).*

Fault Number	Annunciation Message	Description
Fault 53	***Lockout Switch***	Lockout Input has opened.
Fault 67	***AC Phase***	L1 and N connections are miswired.
Fault 105-107	***Internal Fault***	Internal Fault.
Fault 109	***Internal Fault***	AC line negative cycle test has failed.
Fault 110	***Internal Fault***	Field jumpers have been changed after lock into EEPROM.
Fault 111-123	***Internal Fault***	Internal fault.
Fault 125	***Internal Fault***	EEPROM configuration check has failed.
Fault 126-127	***Internal Fault***	Internal fault.

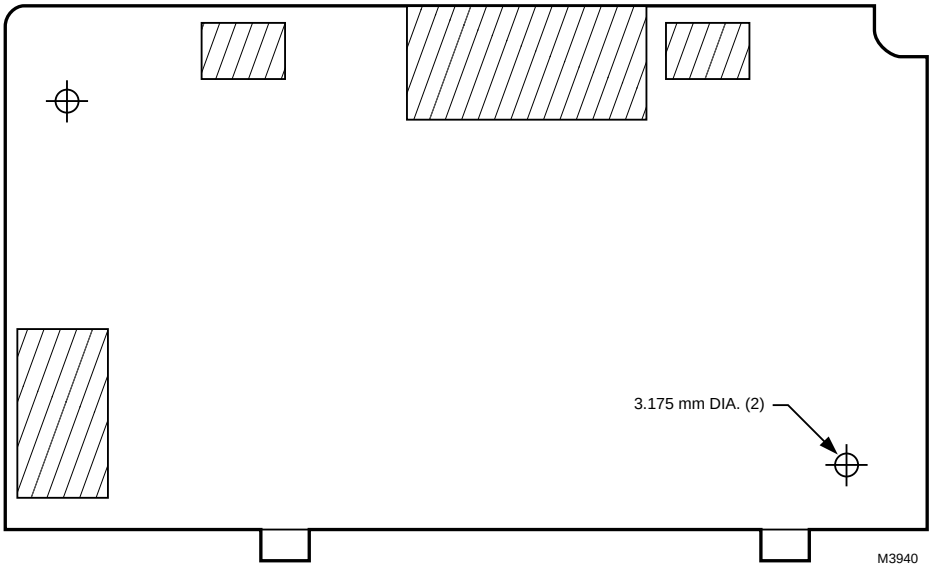

Fig. 23. Flush mounting of a Keyboard Display Module template.

Home and Building Control
Honeywell Inc.
Honeywell Plaza
P.O. Box 524
Minneapolis MN 55408-0524

Honeywell Latin American Division
Miami Lakes Headquarters
14505 Commerce Way Suite 500
Miami Lakes FL 33016

Home and Building Control
Honeywell Limited-Honeywell Limitée
155 Gordon Baker Road
North York, Ontario
M2H 2C9

Honeywell Europe S.A.
3 Avenue du Bourget
B-1140 Brussels Belgium

Honeywell Asia Pacific Inc.
Room 3213-3225
Sun Hung Kai Centre
No. 30 Harbour Road
Wanchai
Hong Kong

Honeywell

Helping You Control Your World

65-0200—1 E.C. Rev. 9-96 Printed in U.S.A.