Honeywell

RM7838B,C
7800 SERIES Relay Module

INSTALLATION INSTRUCTIONS

APPLICATION

The Honeywell RM7838B,C is a microprocessor based integrated burner control for industrial process modulating semiautomatically fired gas, oil, coal or combination fuel single burner applications. The RM7838B,C System consists of a relay module, wiring subbase, keyboard display module (KDM), amplifier, and purge card. Options include Data ControlBus Module™, remote display mounting, and first-out expanded annunciator.

Functions provided by the RM7838B,C include automatic modulated High Fire and Low Fire proven Purge, burner pilot startup with pilot valve hold, a special pilot valve hold from the Run condition, flame supervision, system status indication, system or self-diagnostics and troubleshooting.

The RM7838C differs from the RM7838B as follows:

1. Alarms only on Safety Shutdown.
2. Requires ST7800C Purge Timer.
3. C1004 has 15 second MFEP. C1020 has 5 second MFEP.

This document provides installation and static checkout instructions. Other applicable publications are:

65-0084:	Q7800A,B 22-Terminal Wiring Subbase Product Data.
65-0089:	ST7800A,C Plug-In Purge Timer Installation Instructions.
65-0090:	S7800A Keyboard Display Module Product Data.
65-0101:	S7830 Expanded Annunciator Product Data.
65-0109:	R7824, R7847, R7848, R7849, R7851, R7852, R7861, R7886 Flame Amplifiers for the 7800 Series Product Data.
65-0131:	221818A Extension Cable Assembly Product Data.
65-0229:	7800 Series Relay Modules Checkout and Troubleshooting Product Data.
65-0249:	S7810M ModBus™ Module Product Data.

SPECIFICATIONS

Electrical Ratings (See Table 4):
Voltage and Frequency: 120 Vac (+10/-15%), 50/60 Hz (±10%).

Power Dissipation:
RM7838B,C: 10W maximum.
Maximum Total Connected Load: 2000 VA.
Fusing Total Connected Load: 15A maximum, type SC or equivalent, fast blow.

Environmental Ratings:
Ambient Temperature:
Operating: -40°F to +140°F (-40°C to +60°C).
Storage: -40°F to +150°F (-40°C to +66°C).
Humidity: 85% relative humidity continuous, noncondensing.
Vibration: 0.5G environment.

SIL 3 Capable:
SIL 3 Capable in a properly designed Safety Instrumented System. See form number 65-0312 for Certificate Agreement.

Approvals:
Underwriters Laboratories Inc. Listed: File No. MP268, Guide No. MCCZ.
Canadian Standards Association Certified: LR9S329-3.
Factory Mutual Approved: Report No. 1V9A0.AF.
Swiss Re (formerly Industrial Risk Insurers): Acceptable.
Federal Communications Commission: Part 15, Class B, Emissions.
Gastec: EN298, Report 115679/4 (RM7838C1020 only)

IMPORTANT

A Flame Detection System is required for operation and must be ordered separately. Select the applicable Flame Signal Amplifier and matching Flame Detector in form 65-0109.

INSTALLATION

When Installing this Product...

1. Read these instructions carefully. Failure to follow them could damage the product or cause a hazardous condition.
2. Check the ratings given in the instructions and marked on the product to make sure the product is suitable for the application.
3. Installer must be a trained, experienced, flame safeguard service technician.
4. After installation is complete, check out the product operation as provided in these instructions.

SIL3 Capable

CE

RM7838C1020 only

66-1094-08

ПРОМЭЛЕКТРОНИКА / sales@prom-elec.com

⚠ WARNING

Explosion or Fire Hazard.
Can cause severe personal injury, death or property damage.
To prevent possible hazardous burner operation, verify safety requirements each time a control is installed on a burner.

⚠ WARNING

Electrical Shock Hazard.
Can cause electrical shock or equipment damage.
Disconnect the power supply before beginning installation. More than one power supply disconnect can be required.

Location

Humidity

Install the relay module where the relative humidity never reaches the saturation point. The relay module is designed to operate in a maximum 85% relative humidity continuous, noncondensing, moisture environment. Condensing moisture can cause a safety shutdown.

Vibration

Do not install the relay module where it can be subjected to vibration in excess of 0.5G continuous maximum vibration.

Weather

The relay module is not designed to be weather tight. When installed outdoors, protect the relay module in an approved weather-tight enclosure.

Mounting Wiring Subbase

1. Mount the subbase in any position except horizontally with the bifurcated contacts pointing down. The standard vertical position is recommended; any other position decreases the maximum ambient temperature rating.
2. Select a location on a wall, burner or electrical panel. The Q7800 can be mounted directly in the control cabinet; be sure to allow adequate clearance for service, installation, access or removal of the RM7838B,C, Expanded Annunciator, KDM, flame amplifier, flame amplifier signal voltage probes, Run/Test Switch, electrical signal voltage probes and electrical field connections.
3. For surface mounting, use the back of the subbase as a template to mark the four screw locations; then drill the pilot holes.
4. Securely mount the subbase using four no. 6 screws.

IMPORTANT

1. *Wiring connections for the relay modules are unique; refer to Fig. 2 and 3 or the appropriate Specifications for proper subbase wiring.*
2. *Wiring must comply with all applicable codes, ordinances and regulations.*
3. *Wiring must comply with NEC Class 1 (Line Voltage) wiring.*
4. *Loads connected to the RM7838B,C must not exceed those listed on the RM7838B,C label or the Specifications; see Table 4.*
5. *Limits and interlocks must be rated to simultaneously carry and break current to the ignition transformer, pilot valve, and main fuel valve(s).*
6. *All external timers must be listed or component recognized by authorities who have proper jurisdiction.*
7. *For on-off gas-fired systems, some authorities who have jurisdiction prohibit the wiring of any limit or operating contacts in series between the flame safeguard control and the main fuel valve(s).*
8. *Two Flame Detectors can be connected in parallel with the exception of Infrared Flame Detectors (C7015 and C7915), UV Flame Detectors C7927, and C7961 and visible light detector C7962.*
9. *This equipment generates, uses and can radiate radio frequency energy and, if not installed and used in accordance with the instructions, can cause interference with radio communications. It has been tested and found to comply with the limits for a Class B computing device of Part 15 of FCC rules, which are designed to provide reasonable protection against such interference when operated in a commercial environment. Operation of this equipment in a residential area can cause interference; in which case, the users, at their own expense, may be required to take whatever measures are required to correct this interference.*
10. *This digital apparatus does not exceed the Class B limits for radio noise for digital apparatus set out in the Radio Interference Regulations of the Canadian Department of Communications.*

See Fig. 1 for the internal block diagram of the RM7838B,C Relay Module.

Wiring Subbase

⚠ WARNING

Electrical Shock Hazard.
Can cause serious personal injury, death or equipment damage.
Disconnect the power supply before beginning installation. More than one power supply disconnect may be required.

1. Refer to Fig. 2 or 3 for proper subbase wiring.
2. For proper remote wiring of the KDM, refer to the KDM Specifications (65-0090), Data ControlBus Module™ (65-0091) or Extension Cable Assembly (65-0131).
3. Make sure all wiring complies with all applicable electrical codes, ordinances and regulations. Wiring, where required, must comply with NEC, Class 1 (Line Voltage) wiring.

4. See Table 1 for recommended wire size and type.

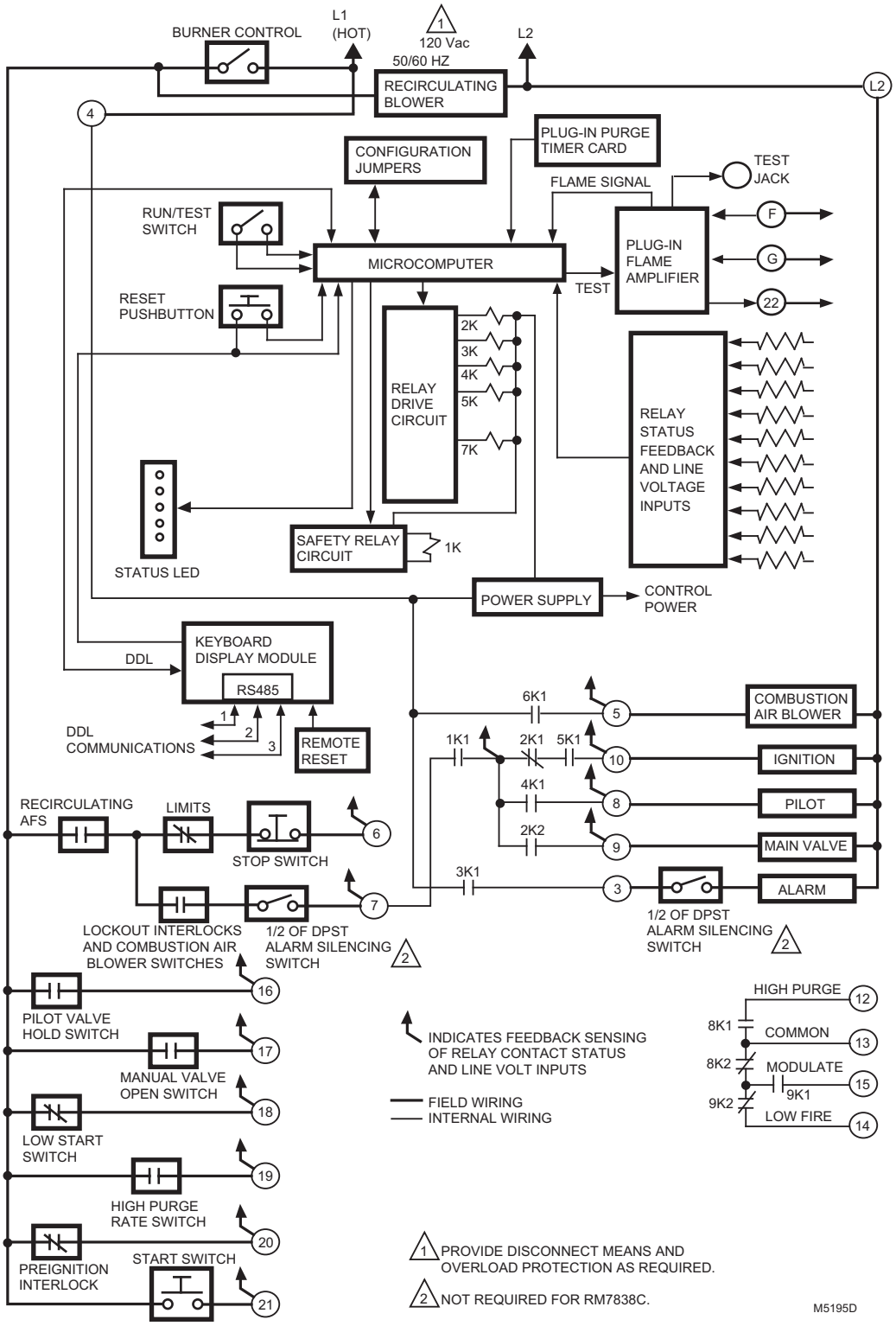

Fig. 1. Internal block diagram of RM7838B,C (see Fig. 2 for RM7838C1020); see Fig. 3 and 4 for detailed wiring instructions.

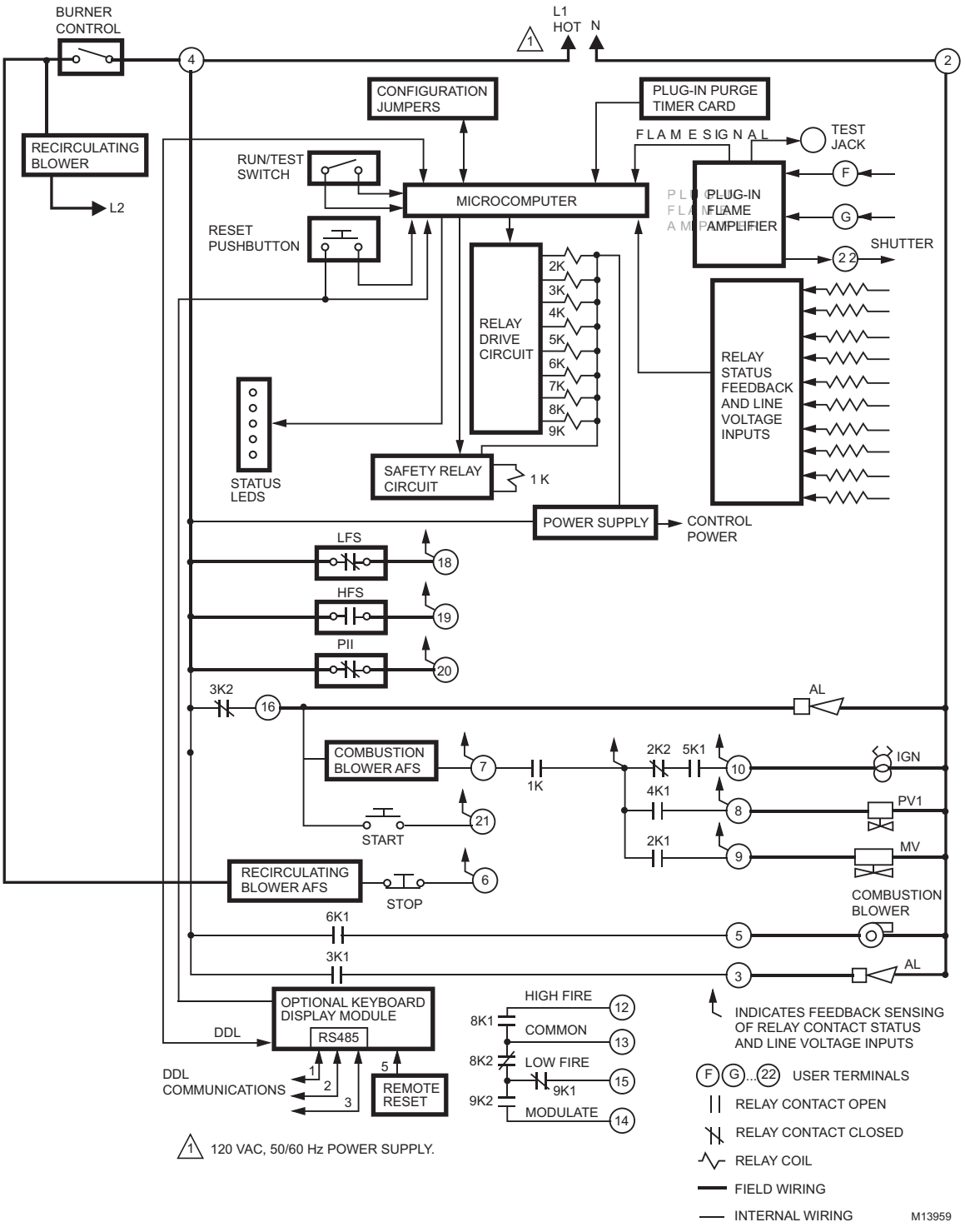

Fig. 2. Internal block diagram of RM7838C1020 (see Fig. 5 for detailed wiring instructions).

Table 1. Recommended Wire Sizes and Part Numbers.

Application	Recommended Wire Size	Recommended Part Numbers
Line voltage terminals	14, 16 or 18 AWG copper conductor, 600 volt insulation, moisture-resistant wire.	TTW60C, THW75C, THHN90C.
KDM	22 AWG two-wire twisted pair with ground, or five-wire.	Belden 8723 shielded cable or equivalent.
Data ControlBus Module™	22 AWG two-wire twisted pair with ground, or five-wire.	Belden 8723 shielded cable or equivalent.
Remote Reset Module	22 AWG two-wire twisted pair, insulated for low voltage.	—
13 Vdc full wave rectified transformer power input.	18 AWG wire insulated for voltages and temperatures for given application.	TTW60C, THW75C, THHN90C.

Table 2. Recommended Grounding Practices.

Ground Type	Recommended Practice
Earth Ground (Subbase and relay module)	**1.** Use to provide a connection between the subbase and the control panel of the equipment. Earth ground must be capable of conducting enough current to blow the 15A fuse (or breaker) in the event of an internal short circuit. **2.** Use wide straps or brackets to provide minimum length, maximum surface area ground conductors. If a lead wire must be used, use 14 AWG copper wire. **3.** Make sure that mechanically-tightened joints along the ground path are free of nonconductive coatings and protected against corrosion on mating surfaces.
Signal Ground (KDM, Data ControlBus Module™	Use the shield of the signal wire to ground the device to the signal ground terminal 3(c) of each device. Connect the shield at both ends of the daisy chain to earth ground.

The KDM and Data ControlBus™ Module (for remote mounting or communications) must be wired in a daisy chain configuration, 1(a)-1(a), 2(b)-2(b), 3(c)-3(c). The order of interconnection of all the devices listed above is not important. Be aware that modules on the closest and farthest end of the daisy chain configuration string require a 120 ohm (1/4 watt minimum) resistor termination across terminals 1 and 2 of the electrical connectors, for connections over 100 feet (31 meters).

4. See Table 2 for recommended grounding practices.

5. Use recommended wire routing of leadwires:
   a. Do not run high voltage ignition transformer wires in the same conduit with the flame detector, Data ControlBus Module™, or Remote Reset Module wiring.
   b. Do not route flame detector, Data ControlBus Module™, or Remote Reset Module leadwires in conduit with line voltage circuits.
   c. Enclose flame detector leadwires without armor cable in metal cable or conduit.
   d. Follow directions in flame detector, Data ControlBus Module™, or Remote Reset Module Instructions.

6. KDM: Because the KDM is powered from a low voltage, energy limited source, mount it outside of a control panel if it can be protected from mechanical damage.

NOTE: Use a separate 13 Vdc power supply any time more than two Data ControlBus Modules™ or KDM are used or are placed more than 100 feet (31 meters) from the relay module.

7. Use maximum wire lengths:
   a. RM7838B,C leadwires—300 feet (91 meters) to terminal inputs (Control, Preignition Interlock, Running/Lockout Interlock, High Purge Switch and Low Fire Switch).
   b. Flame Detector leadwires—limited by the flame signal strength.
   c. Remote Reset leadwires—1000 feet (305 meters) to a Remote Reset push button.
   d. Data ControlBus™ Module—depends on the number of system modules connected, the noise conditions and the cable used. The maximum length of all Data ControlBus™ Module interconnecting wire is 4000 feet (1219 meters).

8. Make sure loads do not exceed the terminal ratings. Refer to the label on the RM7838B,C or to the ratings in Table 4.

FINAL WIRING CHECK

1. Check the power supply circuit. The voltage and frequency tolerance must match those of the RM7838B,C. (A separate power supply may be required for the RM7838B,C.)

2. Add the required disconnect means and overload protection.

3. Check all wiring circuits and complete the static checkout in Table 3 before installing the RM7838B,C on the subbase.

4. Install the relay module.

5. Restore power to the panel.

STATIC CHECKOUT

After checking all wiring, perform this checkout before installing the RM7838B,C on the subbase. These tests verify the Q7800 Wiring Subbase is wired correctly, and the external controllers, limits, interlocks, actuators, valves, transformers, motors and other devices are operating properly.

⚠ WARNING

Explosion and Electrical Shock Hazards.
Can cause serious injury, death or equipment damage.
Close all manual fuel shutoff valve(s) before starting these tests.
Use extreme care while testing the system. Line voltage is present on most terminal connections when power is on.

Open the master switch before installing or removing a jumper on the subbase. Before continuing to the next test, be sure to remove test jumper(s) used in the previous test. Replace all limits and interlocks that are not operating properly. Do not bypass limits and interlocks.

⚠ CAUTION

Electrical Hazard.
Can cause equipment damage.
Do not perform a dielectric test with the RM7838B,C installed. Internal surge protectors break down and conduct current, causing dielectric test failure and destruction of the internal lightning and high current protection.

Equipment Recommended

Voltmeter (1M ohm/volt minimum sensitivity) set on the 0-300 Vac scale and two jumper wires; using No. 14 wire, insulated, 12 in. (304.8 mm) long with insulated alligator clips at both ends. An ammeter to test the load current can replace one of the recommended jumpers in tests verifying the combustion blower motor, ignition, pilot and main valve operation.

General Instructions

1. Perform all applicable tests listed in the Static Checkout, Table 3, in the order listed.
2. Make sure all manual fuel shutoff valve(s) are closed.
3. Perform only those tests designated for the specific RM7838B,C model being tested.
4. Raise the setpoint of the operating controller to simulate a call for heat.
5. For each test, open the master switch and install the jumper wires between the subbase wiring terminals listed in the Test Jumpers column.
6. Close the master switch before observing operation.
7. Read the voltage between the subbase wiring terminals listed in the Voltmeter column.
8. If there is no voltage or the operation is abnormal, check the circuits and external devices as described in the last column.
9. Check all wiring for correct connections, tight terminal screws, correct wire, and proper wiring techniques. Replace all damaged or incorrectly sized wires.
10. Replace faulty controllers, limits, interlocks, actuators, valves, transformers, motors and other devices, as required.
11. Make sure normal operation is obtained for each required test before continuing the checkout.
12. After completing each test, be sure to remove the test jumper(s).

⚠ WARNING

Explosion Hazard.
Can cause serious injury or death.
Make sure all manual fuel shutoff valves are closed.

Table 3. Static Checkout.

Test No.	Test Jumpers	Voltmeter	Normal Operation	If Operation is Abnormal, Check These Items
1	None	4-L2	Line voltage at terminal 4.	**1.** Master Switch. **2.** Power Connected to the Master Switch. **3.** Overload protection (fuse, circuit breaker, etc) has not opened the power line.
2	None	6-L2	Close burner control. Recirculating exhaust blower fan starts, then line voltage at terminal 6.	**1.** Recirculating/exhaust blower fan. **2.** Limits. **3.** Stop Switch. **4.** Burner Control. **5.** Recirculating AFS.
2a	None	4-20	Line voltage at terminal 20.	Preignition Interlock.
2b	None Close Pilot Valve Hold	4-16	Line voltage at terminal 16.	Pilot Valve Hold. NOTE: C1020 does not have Pilot Valve Hold.
2c	None Close Manual Open Valve Switch	4-17	Line voltage at terminal 17.	Manual Open Valve Switch. NOTE: C1020 does not have MOV.

Table 3. Static Checkout. (Continued)

Test No.	Test Jumpers	Voltmeter	Normal Operation	If Operation is Abnormal, Check These Items
3	None	21-L2	With test 2 still running, press Start Switch. 120 Vac is present at terminal 21.	1. Start Switch. 2. Preignition Interlock.
4	None	6-L2	Push and hold Stop Switch. No voltage present at terminal 6.	Stop Switch.
5	4-3	None	Alarm (if used) turns on.	1. Alarm. 2. Alarm Silencing Switch (B model only).
6	4-5	7-L2	Close burner control. Recirculating/exhaust blower fan starts, then line voltage is present at terminal 6. 1. Combustion air fan starts. 2. Line voltage at terminal 7 within 10 seconds.	1. Combustion air fan circuit: a. Manual switch on air fan motor. b. Air fan power supply, overload protection, and starter. 2. Combustion Blower Air Flow Switch. 3. Alarm Silencing Switch (B model only). 4. Recirculating Air Flow Switch.
7	4-8	None	Automatic pilot valve opens. First stage valve (DSI application only). Ignition spark (if ignition transformer connected).	1. Listen for click or feel head of valve for activation. 2. Watch for spark or listen for buzz: a. Ignition electrodes are clean. b. Ignition transformer is okay.
8	4-9	None	Automatic main fuel valves open. (DSI checks optional second state fuel valve.)	Listen for and observe operation of the main fuel valve(s) and actuator(s).
9	4-10	None	Ignition spark (if ignition transformer connected to terminal 10.	1. Watch for spark or listen for buzz: a. Ignition electrodes are clean. b. Ignition transformer is okay.
10	12-13	18-L2	Firing rate motor drives open; zero volts at terminal 18 after motor leaves Low Fire position.	1. Low Fire Start Switch. 2. Firing rate motor and transformer.
11	12-13	19-L2	Firing rate motor reaches High Purge Rate position; 120 Vac at terminal 19 when High Purge Rate Switch closes.	1. High Purge Rate Switch. 2. Firing rate motor and transformer.
12	13-14 (13-15 for C1020)	19-L2	Firing rate motor leaves High Purge Rate Position; zero Vac at terminal 19 when High Purge Rate Switch opens.	1. High Purge Rate Switch. 2. Firing rate motor and transformer.
13	13-14 (13-15 for C1020)	18-L2	Firing rate motor drives to Low Purge Rate position; 120 Vac at terminal 18 when switch closes.	1. Low Purge Rate Switch. 2. Firing rate motor and transformer.
14	13-15 (13-14 for C1020)	None	Adjust firing rate control and watch tracking action of the firing rate motor.	1. Firing rate control. 2. Firing rate motor and transformer.
Final	**⚠ CAUTION** **Electrical Hazard.** **Can cause equipment damage.** After completing these tests, open the Master Switch and remove all test jumpers from the subbase terminals. Also remove bypass jumpers from the low fuel pressure limits if used.			

Table 4. Terminal Ratings.

Terminal No.	Description	Ratings
G	Flame Sensor Ground[a]	—
Earth G	Earth Ground[a]	—
L2	Line Voltage Common	—
3	Alarm	120 Vac, 1A pilot duty.
4	Line Voltage Supply (L1)	120 Vac (+10/-15%), 50/60 Hz (+/-10%).[b]
5	Combustion Blower	120 Vac, 9.8 AFL, 58.8 ALR (inrush).
6	Stop Input	120 Vac, 1 mA.
7	Lockout Interlock	120 Vac, 8A running, 43A inrush.
8	Interrupted Pilot	120 Vac.[c]
9	Main Fuel Valve	120 Vac.[c]
10	Ignition	120 Vac.[c]
F(11)	Flame Sensor	60 to 220 Vac, current limited.
12	Firing Rate High Fire	120 Vac, 75 VA pilot duty.
13	Firing Rate Common	120 Vac, 75 VA pilot duty.
14	Firing Rate Low Fire	120 Vac, 75 VA pilot duty.
15	Firing Rate Modulate	120 Vac, 75 VA pilot duty.
16	Pilot Valve Hold Input	120 Vac, 1 mA.
17	Manual Open Switch	120 Vac, 1 mA.
18	Low Fire Switch	120 Vac, 1 mA.
19	High Fire Switch	120 Vac, 1 mA.
20	Preignition Interlock	120 Vac, 1 mA.
21	Start Switch Input	120 Vac, 1A pilot duty.
22	Shutter	120 Vac, 0.5A.

[a] See Table 2.

[b] 2000 VA maximum load connected to RM7838B,C Assembly.

[c] See Tables 5 and 6.

Table 5. Combinations for Terminals 8, 9, and 10.

Pilot Fuel 8	Main 9	Ignition 10
C	F	No Load
B	F	No Load
F	F	A
No Load	F[a]	A
D	F	A
D	D	A
No Load	D[a]	A

[a]Jumper Terminals 8 to 9 for direct spark ignition.

Table 6. Composition of Each Combination.

A	B	C	D	F
4.5A ignition	50 VA Pilot Duty plus 4.5A ignition	180 VA Ignition plus Motor Valves with: 660 VA inrush, 360 VA open, 250 VA hold.	2A Pilot Duty	65 VA Pilot Duty plus motor valves with: 3850 VA inrush, 700 VA open, 250 VA hold.

Table 7. RM7838C1020 Alternate Terminal Ratings

Terminal No.	Abbreviation	Description	Ratings
G	—	Flame Sensor Ground[a]	—
Earth G	—	Earth Ground[a]	—
N	—	Line Voltage Common (Neutral)	—
3	AL	Alarm (Normally Open)	1A, 10A inrush for 5000 cycles
4	L1	Line Voltage Supply (L1)	120 Vac (+10/-15%), 50/60 Hz (+/-10%).[b]
5	FAN	Combustion Blower Motor	4A at PF =0.5, 20A inrush[c]
6	—	Stop Input	1mA
7	LD2	Airflow Switch Input (Lockout Interlock)	5A
8	pv1	Pilot Valve 1 (Interrupted)	4A at PF = 0.5, 20A inrush[d]
9	MV	Main Fuel Valve	4A at PF = 0.5, 20A inrush[d]
10	IGN	Ignition	2A at PF = 0.2
F(11)	—	Flame Sensor	60 to 220 Vac, current limited.
12	HI	Firing Rate High Fire	0.5A at PF = 0.5[e]
13	COM	Firing Rate Common	0.5A at PF = 0.5[e]
14	MOD	Firing Rate Modulate	0.5A at PF = 0.5[e]
15	LO	Firing Rate Low FIre	0.5A at PF = 0.5[e]
16	—	Alarm (Normally Closed)	1A, 10A inrush for 5000 cycles; carry 5A for 250,000 cycles
17	—		
18	ES1	Low Fire Switch Input	1mA
19	ES3	High Fire Switch Input	1mA
20	LOS	Preignition Interlock	1mA
21	Start Switch	Start Switch	1mA
22	SHTR	Shutter	Shutter drive for dynamic self-check flame sensor.

[a] See Table 2.

[b] 2000 VA maximum connected load to relay module.

[c] Honeywell has tested this output at 9.8A at PF = 0.5, 58.A inrush for 100,000 cycles

[d] Total load current, excluding Burner/Boiler Motor and Firing Rate Outputs cannot exceed 5A, 25A inrush.

[e] Can also be 24Vac, 3A at PF = 0.5.

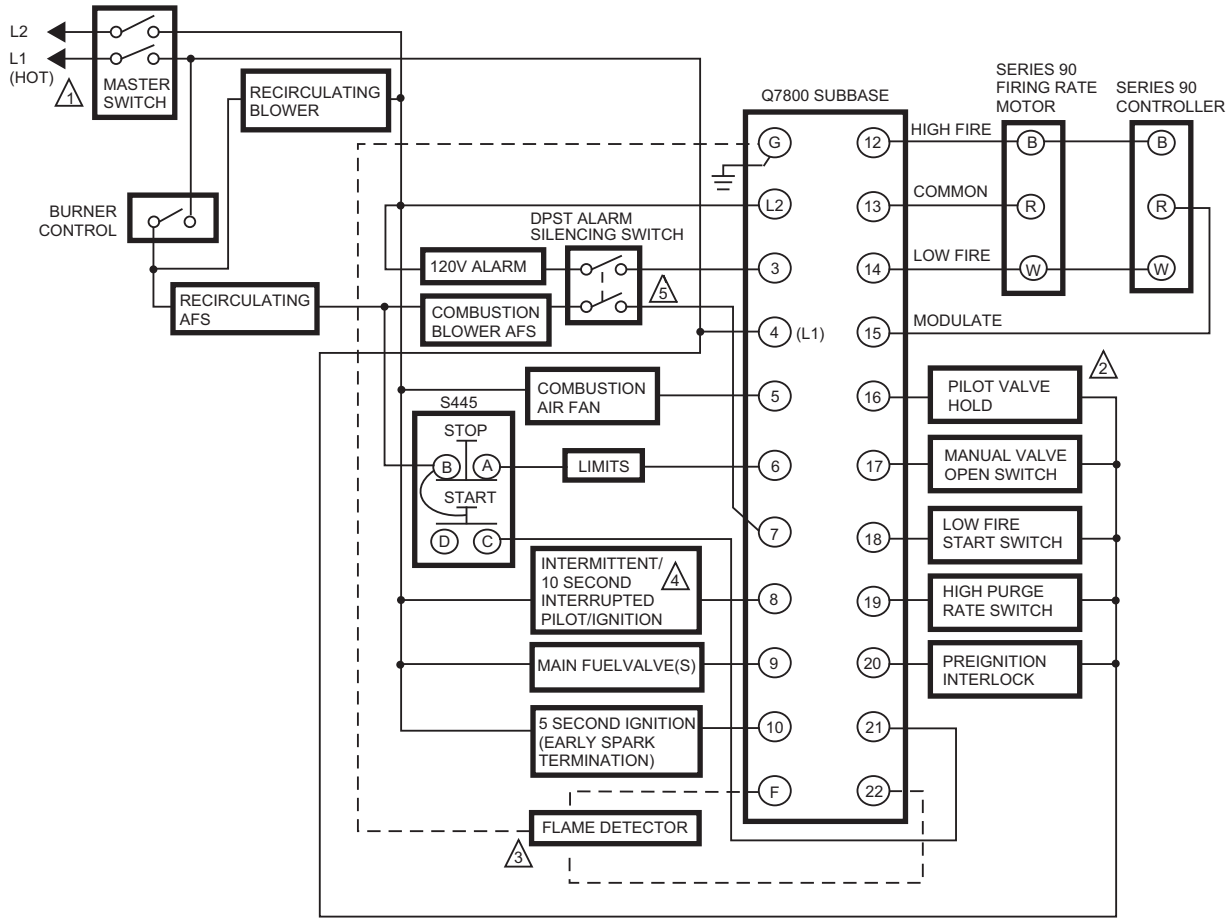

1 120V, 50/60 HZ POWER SUPPLY. PROVIDE DISCONNECT MEANS AND OVERLOAD PROTECTION AS REQUIRED.

2 SHUTTER CHECK FLAME DETECTION SYSTEM REQUIRED WHEN USING THE PILOT VALVE HOLD FUNCTION.

3 SEE FLAME DETECTOR INSTALLATION INSTRUCTIONS FOR CORRECT WIRING.

4 15 SECOND FOR RM7838C.

5 ALARM SILENCING SWITCH NOT NEEDED FOR RM7838C APPLICATIONS.

M15101D

Fig. 3. Wiring subbase for RM7838B,C with S445 Start-Stop Station (not the RM7838C1020).

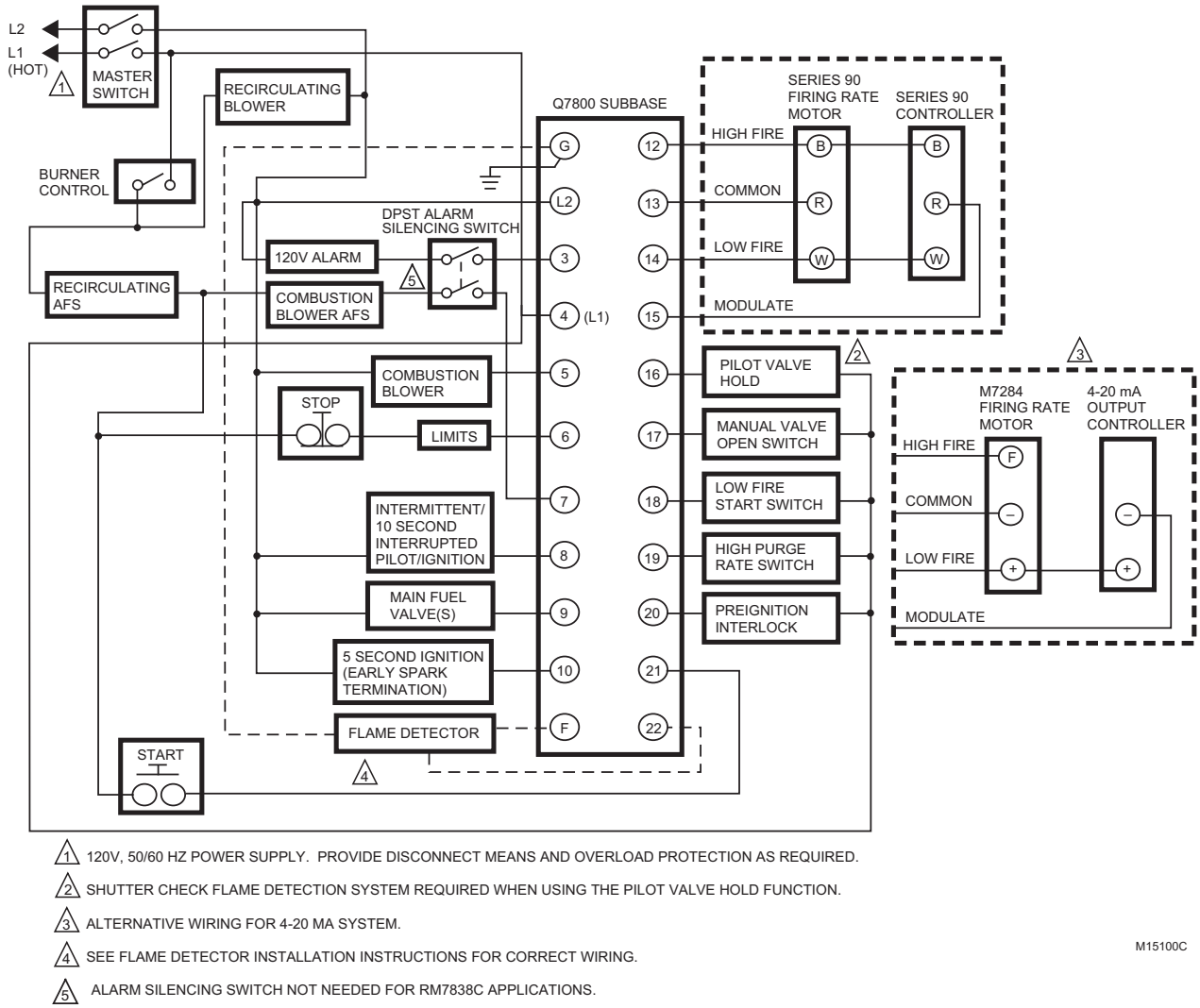

1 120V, 50/60 HZ POWER SUPPLY. PROVIDE DISCONNECT MEANS AND OVERLOAD PROTECTION AS REQUIRED.

2 SHUTTER CHECK FLAME DETECTION SYSTEM REQUIRED WHEN USING THE PILOT VALVE HOLD FUNCTION.

3 ALTERNATIVE WIRING FOR 4-20 MA SYSTEM.

4 SEE FLAME DETECTOR INSTALLATION INSTRUCTIONS FOR CORRECT WIRING.

5 ALARM SILENCING SWITCH NOT NEEDED FOR RM7838C APPLICATIONS.

Fig. 4. Wiring subbase for RM7838B,C with separate Start and Stop Stations (not the RM7838C1020).

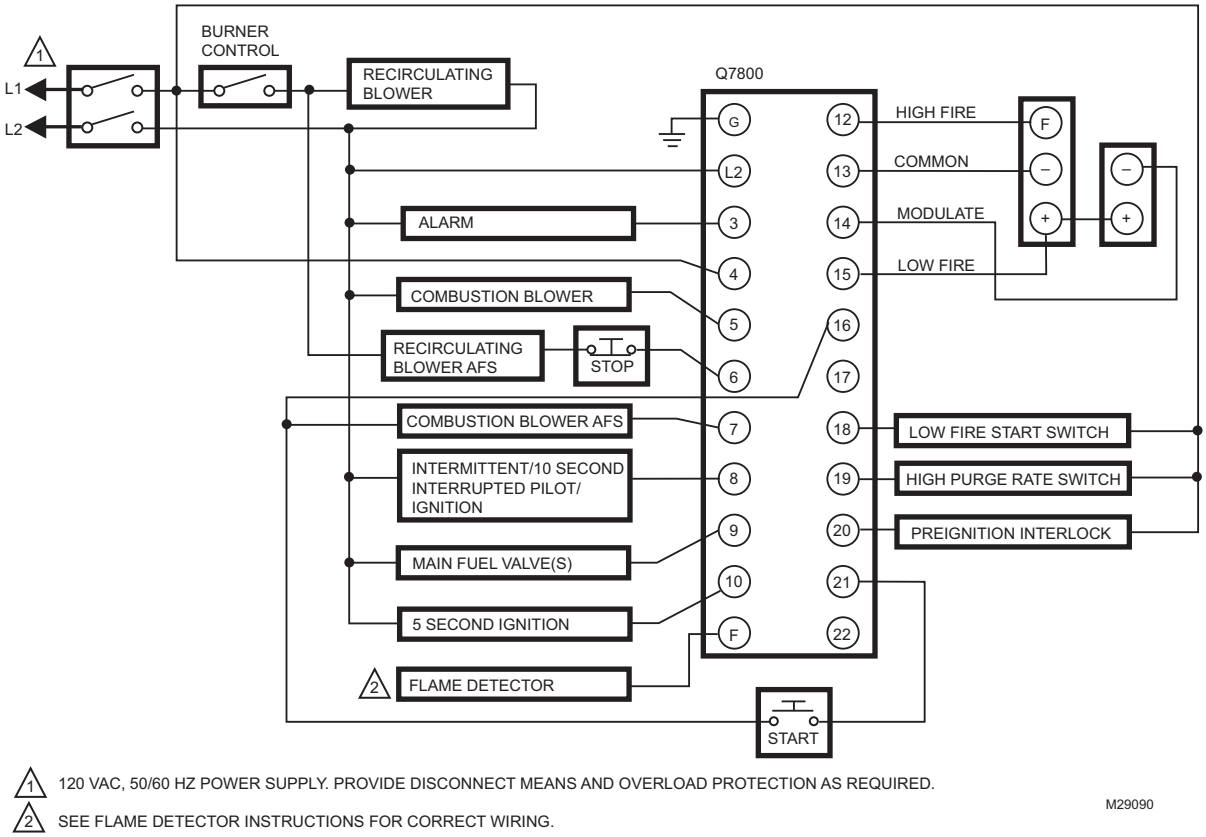

Fig. 5. Hookup of RM7838C1020.

Mounting RM7838B,C Relay Module

1. Mount the RM7838B,C vertically on the Q7800 Subbase, or mount horizontally with the knife blade terminals pointing down. (For mounting on the Q7800A, mount the RM7838B,C in an electrical enclosure.)
2. When mounting in an electrical enclosure, provide adequate clearance for service, installation and removal of the RM7838B,C, KDM, flame amplifier, flame amplifier signal voltage probes, electrical signal voltage probes, and electrical connections.
   a. Allow an additional 2 in. (51 mm) below the RM7838B,C for the flame amplifier mounting.
   b. Allow an optional 3 in. (76 mm) minimum to both sides of the RM7838B,C for electrical signal voltage probes.
3. Make sure no subbase wiring is projecting beyond the terminal blocks. Tuck in wiring against the back of the subbase so it does not interfere with the knife blade terminals or bifurcated contacts.

IMPORTANT

Install the RM7838B,C with a plug-in motion rather than a hinge action.

4. Mount the RM7838B,C by aligning the four L-shaped corner guides and knife blade terminals with the bifurcated contacts on the wiring subbase and securely tightening the two screws without deforming the plastic.

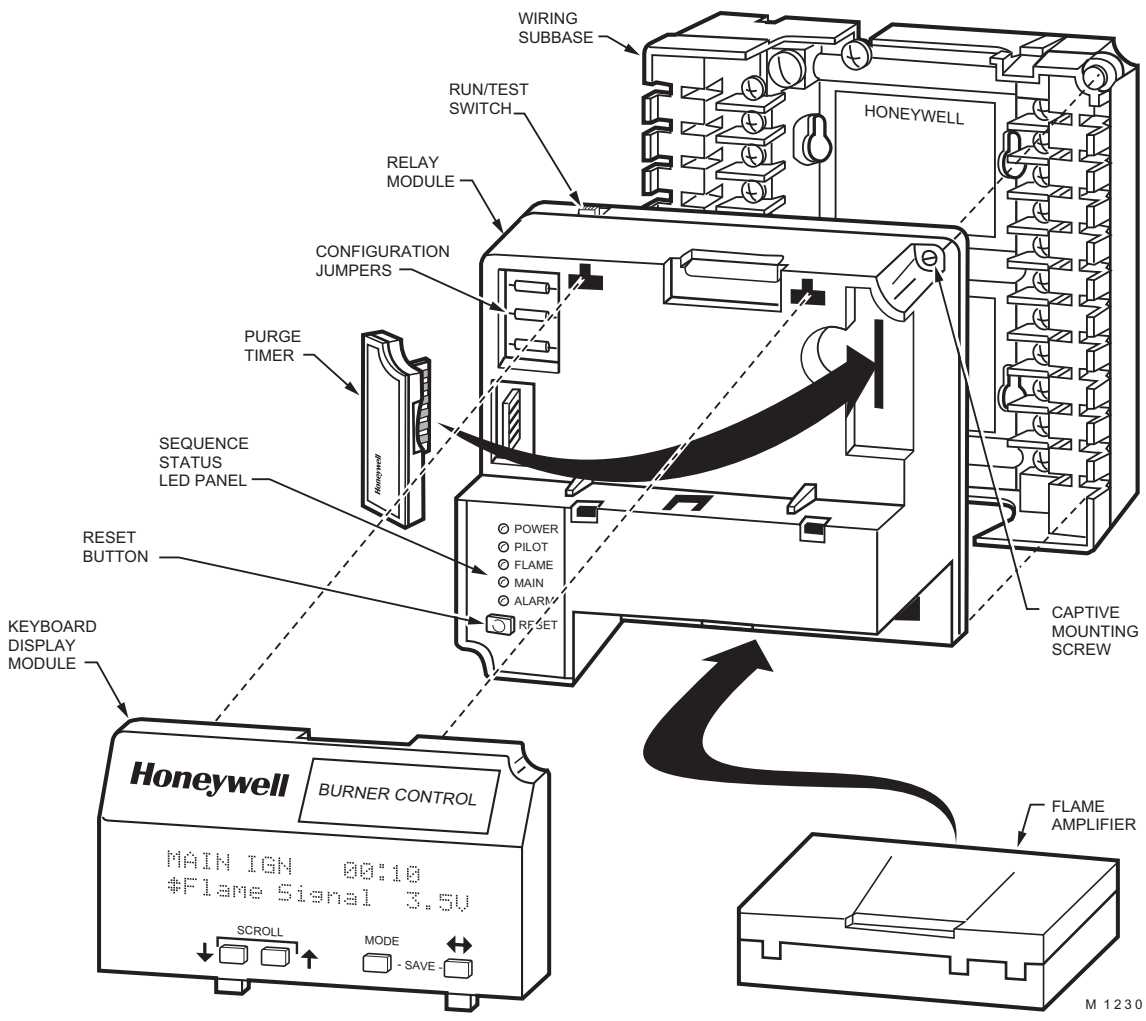

Fig. 6. RM7838B,C Relay Module exploded view.

Mounting Other System Components (Fig. 4)

Mount other required and optional system components by referring to Fig. 4 and the instructions provided with each component.

PRINCIPAL TECHNICAL FEATURES

The RM7838B,C provides all customary flame safeguard functions as well as significant advancements in safety, annunciation and system diagnostics.

Safety Shutdown (Lockout) Occurs If:

1. INITIATE Period
   a. Purge card is not installed or removed.
   b. Purge card is bad.
   c. Configuration jumpers were changed after 200 hours of operation.
   d. AC line power errors, see Operation.
   e. Four minute INITIATE period is exceeded.
2. STANDBY Period
   a. Flame signal is present after 240 seconds after Run Complete.
   b. Preignition Interlock is open after 30 seconds.
   c. Ignition/pilot valve terminal is energized.
   d. Main valve terminal is energized.
   e. Internal system fault.
   f. Purge card is not installed or removed.
   g. Purge card is bad.
   h. Flame detected during the last two seconds.

ПРОМЭЛЕКТРОНИКА / sales@prom-elec.com

3. PURGE Period
   a. Preignition Interlock opens anytime during purge.
   b. Flame signal detected during purge .
   c. High Purge Rate Switch fails to close within four minutes, fifteen seconds after the firing rate motor is commanded to drive to high fire position.
   d. Low Fire Start Switch fails to close within four minutes, fifteen seconds after the firing rate motor is commanded to drive to low fire position.
   e. Lockout Interlock does not close within five seconds.
   f. Lockout Interlock opens during purge .
   g. Ignition/pilot valve/intermittent pilot valve terminal is energized.
   h. Main valve terminal is energized.
   i. Internal system fault.
   j. Purge card is not installed or removed.
   k. Purge card is bad.
4. Purge Hold: T21
   a. Preignition Interlock opens.
   b. Flame is detected.
   c. Lockout Interlock opens during Hold.
   d. Ignition/pilot valve/main valve is energized.
   e. Internal system fault.
   f. Purge card is removed.
   g. Purge card is bad.
5. PILOT FLAME ESTABLISHING Period (PFEP)
   a. Low Fire Switch opens.
   b. Lockout Interlock opens .
   c. Ignition/pilot valve/intermittent pilot valve terminal is not energized.
   d. No flame is present at end of PFEP.
   e. Internal system fault.
   f. Purge card is not installed or removed.
   g. Purge card is bad.
6. MAIN FLAME ESTABLISHING Period (MFEP)
   a. Low Fire Switch opens.
   b. Lockout Interlock opens .
   c. Ignition/pilot valve/intermittent pilot valve terminal is not energized.
   d. Main valve terminal is not energized.
   e. No flame is present at end of MFEP.
   f. Internal system fault.
   g. Purge card is not installed or removed.
   h. Purge card is bad.
7. RUN Period
   a. Flame is present.
   b. Lockout Interlock opens.
   c. Main valve terminal is de-energized.
   d. Internal system fault.
   e. Purge card is not installed or removed.
   f. Purge card is bad.
8. Pilot Valve Hold
   a. Low Fire Switch opens.
   b. Lockout Interlock opens.
   c. Ignition/pilot valve terminal is not energized.
   d. No flame is present at end of PFEP.
   e. Internal system fault.
   f. Purge card is not installed or removed.
   g. Purge card is bad.
   h. Non Shutter Check Amplifier/Detector used.

OPERATION

Sequence of Operation

The RM7838B,C has the operating sequences listed below. The RM7838B,C LED provide positive visual indication of the program sequence: POWER, PILOT, FLAME, MAIN and ALARM. Fig. 5 and 6 show the operating sequences not using pilot valve hold and using pilot valve hold, respectively.

Initiate

The RM7838B,C enters the INITIATE sequence when the Relay Module is initially powered. The RM7838B,C can also enter the INITIATE sequence if the Relay Module verifies voltage fluctuations of +10/-15 percent or frequency fluctuations of ±10 percent during any part of the operating sequence. The INITIATE sequence lasts for ten seconds unless the voltage or frequency tolerances are not met. When the tolerances are not met, a hold condition is initiated and displayed on the KDM for at least five seconds. When the tolerances are met, the INITIATE sequence restarts. If the condition is not corrected and the hold condition exists for four minutes, the RM7838B,C locks out. Causes for hold conditions in the INITIATE sequence:

   a. ac line dropout detection.
   b. ac line noise that prevents a sufficient reading of the line voltage inputs.
   c. Low line voltage brownouts.

The Alarm, terminal 3, is energized during INITIATE (RM7838B only).

Standby

The RM7838B,C remains in STANDBY until the Burner Control Switch is closed. Two seconds before leaving STANDBY, the shutter circuit is energized and verifies that no flame is present. The Alarm, terminal 3, is energized until flame is sensed (RM7838B only).

Purge

The RM7838B,C provides PURGE timing selectable from two seconds to thirty minutes. The RM7838C requires the ST7800C Purge Timer for correct operation. The ST7800C Purge Timer will not fit into an RM7838B.

1. Closing the burner control switch starts the recirculating/exhaust blower. PURGE sequence begins when power is applied to the RM7838B,C through the recirculating/exhaust blower airflow switch, Stop Station, and the limit string to terminal 6. The Run/Test switch and all microcomputer-monitored circuits must also be in the correct operating state.
2. The RM7838B,C Relay Module commands the firing rate motor to the high purge rate position by closing a circuit between terminals 12 and 13. PURGE timing begins when the High Fire Switch closes, providing input to terminal 19. Four minutes, 15 seconds are provided for the High Fire Switch to close. A jumpered High Fire Switch adds 30 seconds to the PURGE timing.
3. When the PURGE timing is complete, the RM7838B,C commands the firing rate motor to the low fire position by closing a circuit between terminals 13 and 14 (terminals 13 and 15 for the C1020). Four minutes, 15 seconds are provided for the motor to reach the low fire position.

4. When the Low Fire Proving Switch is proven (input on terminal 18), the RM7838B,C commands the Combustion Blower to turn on through terminal 5. A jumpered Low Fire Switch adds 30 seconds to the PURGE timing.
5. The RM7838C will wait indefinitely for the Combustion Airflow Switch , terminal 7, to close. Once closed, five seconds are provided for it to stabilize. Safety shutdown occurs if the Combustion Blower Airflow Switch opens after this five-second period, during ignition trials or RUN.
6. The RM7838B,C waits indefinitely for the Start Input to terminal 21.
7. The Preignition Interlock must remain closed throughout PURGE timing or a safety shutdown occurs.
8. The Alarm is powered during PURGE timing (RM7838B only).

Ignition Trials

Ignition trials begin when the momentary Start input is received at terminal 21 of the RM7838B,C. The RM7838B,C locks out if the Start Switch is not released.

1. Pilot Flame Establishing Period (PFEP):
   a. When the PFEP begins:
      (1) The pilot valve and ignition transformer, terminals 8 and 10, are energized.
      (2) Five seconds into PFEP, Ignition terminal 10 is de-energized.
      (3) Flame must be proven by the end of the ten second PFEP (four seconds if Configuration Jumper JR1 is clipped); to allow the sequence to continue. If a flame is not proven by the end of PFEP, a safety shutdown occurs.
      (4) During PFEP, the Low Fire Switch must remain closed. If it opens, a safety shutdown occurs.
      (5) The Preignition Interlock input is ignored throughout the Ignition Trial state.
      (6) The alarm output stops when flame is proven. (RM7838B only)
      (7) The RM7838B,C (except C1020):
         (a)holds indefinitely, waiting for Manual Open Valve command (terminal 17).
         (b)holds indefinitely with a Pilot Valve Hold command present on terminal 16.
         (c)automatically sequences to Main Flame Establishing Period (MFEP) if the configuration jumper JR3 was clipped and the Pilot Valve Hold Command is not present. Manual Open Valve input, terminal 17, must be closed at the end of MFEP.
   b. With flame proven, the alarm, terminal 3, is de-energized (RM7838B only).
2. Main Flame Establishing Period (MFEP) (except C1020 as it does not have a manual open valve switch input):
   a. With the configuration jumper JR3 intact, the RM7838B,C waits for Manual Open Valve Switch input to terminal 17 through a Manual Open Valve Switch. With the configuration jumper JR3 clipped and the Pilot Valve Hold command on terminal 16 open, the RM7838B,C initiates immediate MFEP.
      (1) Main valve terminal 9 is energized by the RM7838B,C and the relay module is in the RUN period.
      (2) If configuration jumper JR2 is clipped, ten seconds after terminal 9 is energized (15 seconds for the C1004, 5 seconds for the C1020), the pilot valve terminal 8 is de-energized. If flame is lost during this MFEP, safety shutdown occurs and the ALARM sounds.
      (3) If configuration jumper JR3 is clipped, a Manual Open Valve Switch input must be present at terminal 17 at the end of the MFEP or safety shutdown occurs and the Alarm sounds.
   b. The C1020 proceeds immediately to a 5 sec MFEP.

Run

1. The RM7838B,C releases the firing rate motor to modulation (terminals 13 and 15 are closed) (terminal 13 and 14 for C1020).
2. The RM7838B,C is now in RUN and remains in RUN until the controller input, terminal 6, opens (burner control opens, Stop Switch is pushed, running interlocks open, a limit opens, Run/Test is switched to Test), indicating that the demand is satisfied or a limit opened, or the Pilot Valve Hold (terminal 16) is energized.

Pilot Valve Hold (except C1020)

Pilot Valve Hold (switched line voltage input to terminal 16) allows the burner to be cycled back to Pilot from the Run position without the need to do a complete burner startup. This allows for batch loading in process applications.

A shutter-type flame detection system is required to use the Pilot Valve Hold function.

Pilot Valve Hold can also be used to hold the burner at the end of PFEP if configuration jumper JR3 was clipped.

A switch closure to the RM7838B,C terminal 16 while in the Run position initiates the Pilot Valve Hold:

1. RM7838B,C commands the firing rate motor to Low Fire position.
2. Once Low Fire is proven (input to terminal 18 through Low Fire Switch), the pilot valve terminal is energized.
3. Forty-five seconds later, the main valve terminal is de-energized and the ignition terminal is energized for ten seconds, then shut off.
4. Pilot valve, terminal 8, remains energized throughout Pilot Valve Hold.
5. RM7838B,C remains in Hold as long as a Pilot Valve Hold input is present on terminal 16.
6. Opening the Pilot Valve Hold input to terminal 16 puts the RM7838B,C ready to initiate MFEP.

The RM7838B,C goes into safety shutdown and sounds the Alarm if flame is lost at any time during this sequence.

NOTE: A Shutter Check Detection System must be in place to use the Pilot Valve Hold function. Fault 46 occurs along with safety shutdown.

Keyboard Display Module

The KDM (see Fig. 7) is provided with the RM7838B,C Relay Module. The first line of the Vacuum Fluorescent Display (VFD) provides:

a. Current status of the burner sequence (STANDBY, PURGE, PILOT IGN, MAIN IGN and RUN).
b. Timing information (PURGE, PILOT IGN and MAIN IGN) in minutes and seconds.
c. Hold information (PURGE HOLD).
d. Lockout information (Lockout, Fault Code, Message and Sequence).

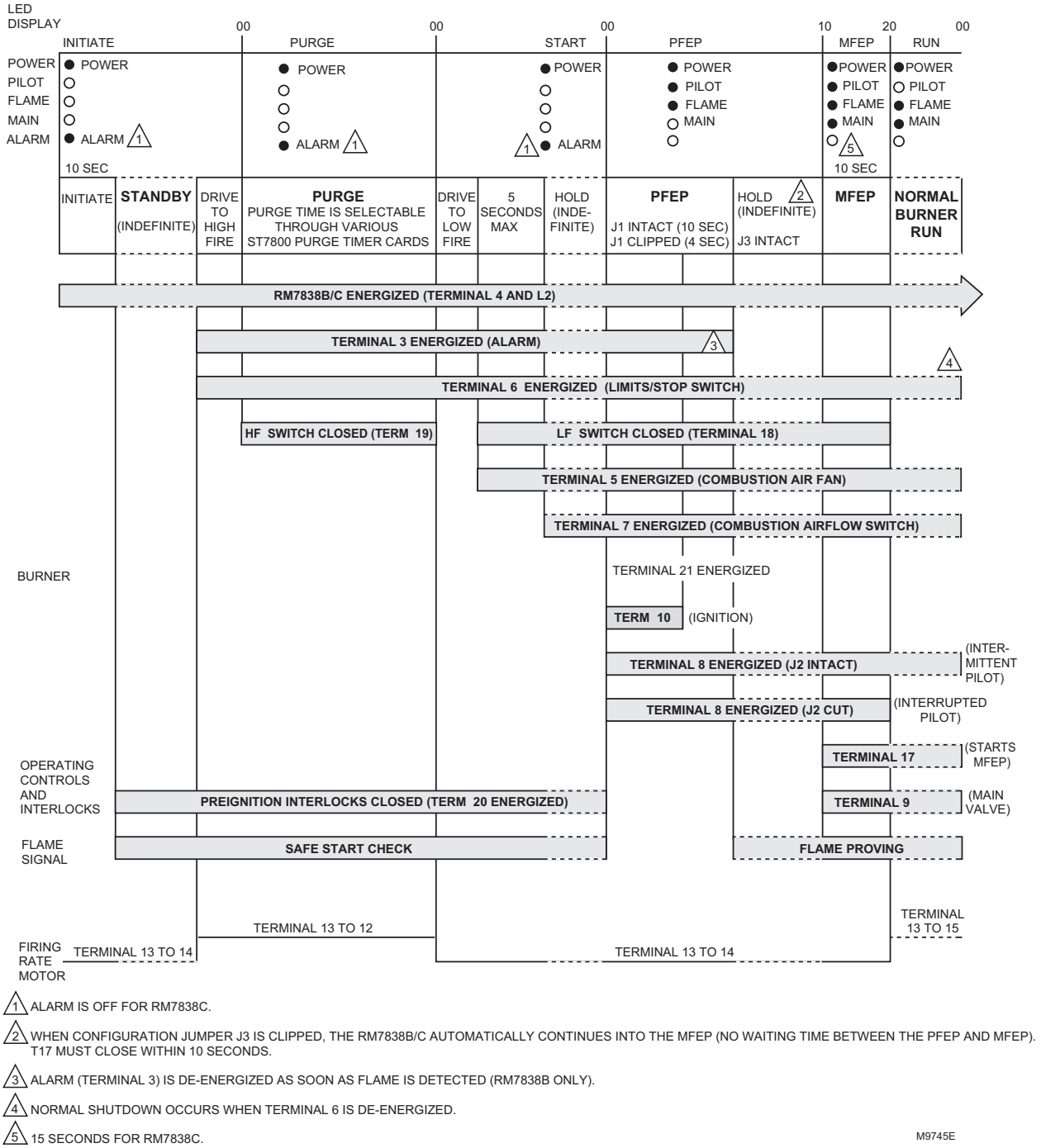

1 ALARM IS OFF FOR RM7838C.

2 WHEN CONFIGURATION JUMPER J3 IS CLIPPED, THE RM7838B/C AUTOMATICALLY CONTINUES INTO THE MFEP (NO WAITING TIME BETWEEN THE PFEP AND MFEP). T17 MUST CLOSE WITHIN 10 SECONDS.

3 ALARM (TERMINAL 3) IS DE-ENERGIZED AS SOON AS FLAME IS DETECTED (RM7838B ONLY).

4 NORMAL SHUTDOWN OCCURS WHEN TERMINAL 6 IS DE-ENERGIZED.

5 15 SECONDS FOR RM7838C.

Fig. 7. RM7838B,C Relay Module operation (not using pilot valve hold); see Fig. 8 for the C1020.

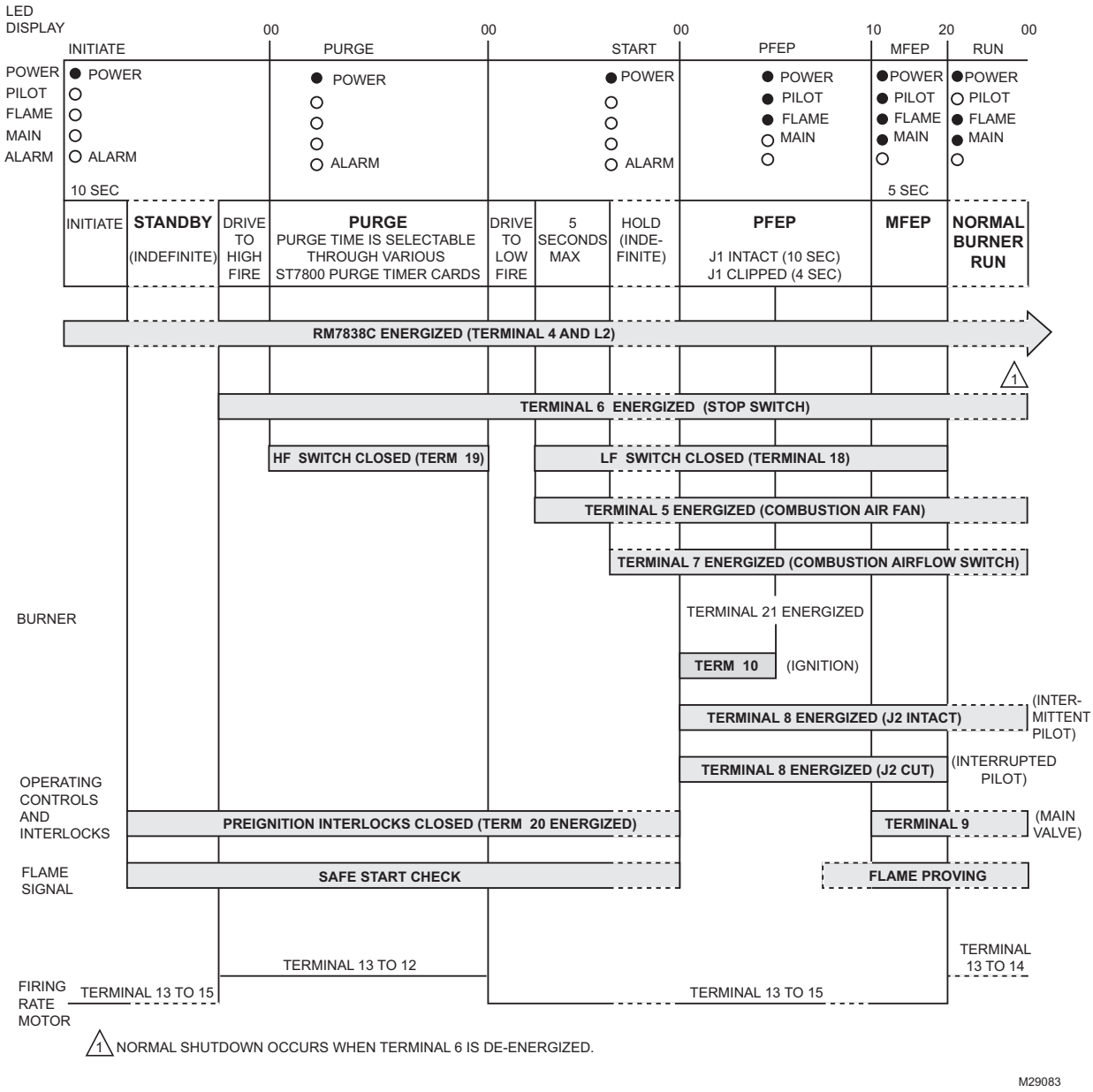

Fig. 8. RM7838C1020 Relay Module operation.

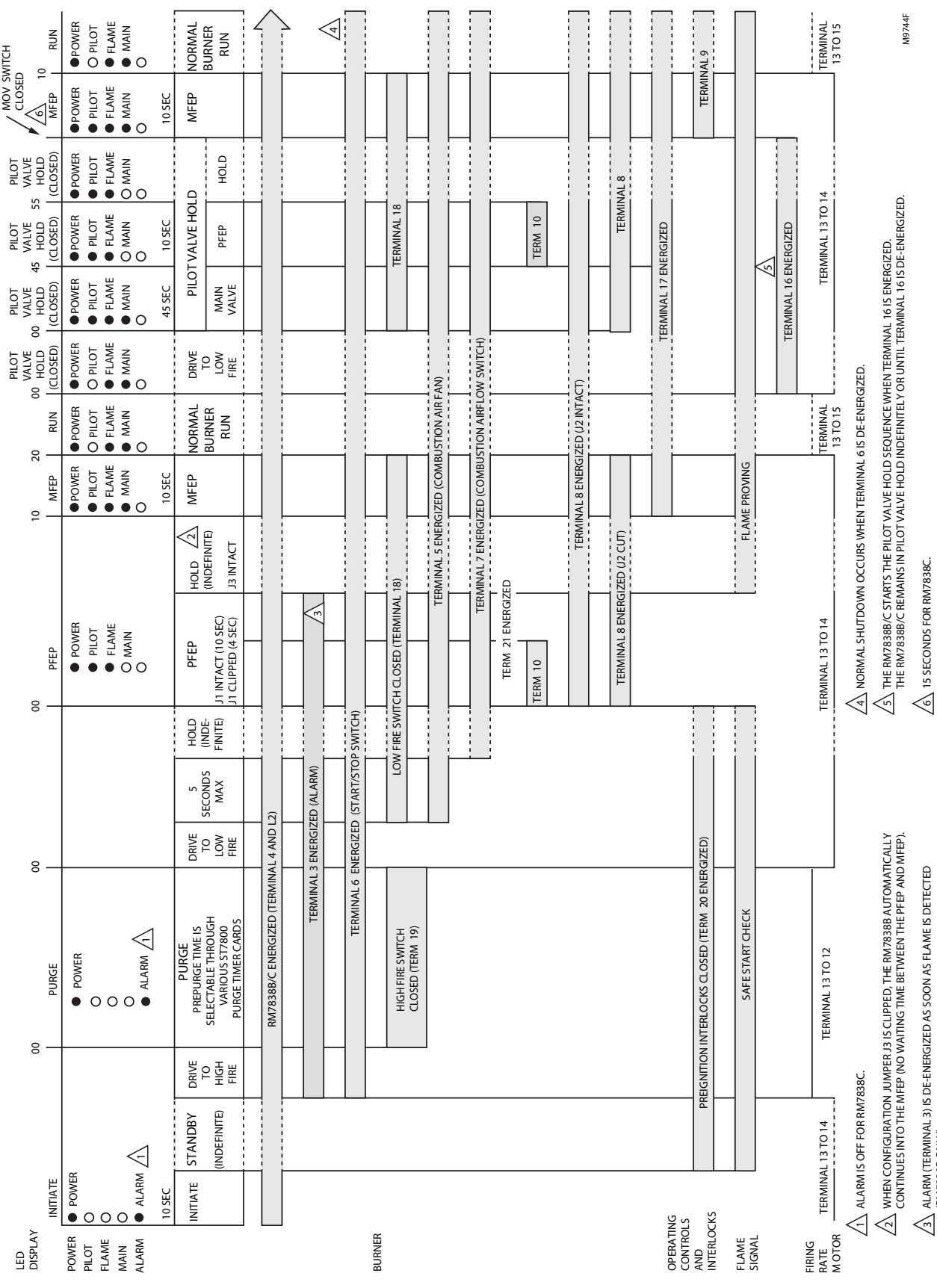

Fig. 9. RM7838B,C Relay Module operation (using pilot valve hold) (not C1020).

The extreme right side of the first line is either blank or shows a small arrow pointing to the second line followed by a two-letter code (DI—Diagnostic Information, H1—Fault History Information, and EA—Expanded Annunciator). When the arrow and two-letter code are displayed, it indicates the second line is showing a selectable message submenu. The second line displays selectable or preemptive messages.

A selectable message supplies information for flame strength, system status indication, system or self-diagnostics and troubleshooting. Refer to checkout and troubleshooting instructions; see applicable publications listed on page 1.

A preemptive message has parentheses around the message and supplies a detailed message to support the sequence status information. A preemptive message can also be a lockout message. A preemptive message replaces a selectable message to support the sequence status information. It also replaces a selectable message after 60 seconds if it or a lockout message is available.

NOTE: NOTE:RM7838B,C LED provide positive visual indication of the program sequence: POWER, PILOT, FLAME, MAIN and ALARM. See Fig. 7.

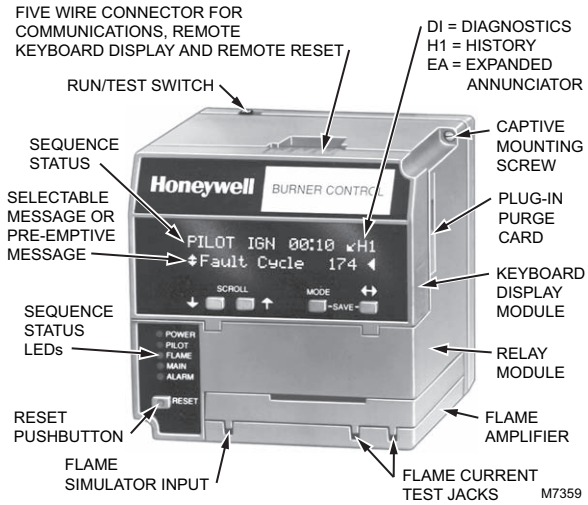

Fig. 10. Relay Module and associated system components.

Run/Test Switch

The Run/Test Switch is located on the top side of the RM7838B,C, see Fig. 7. The Run/Test Switch allows the burner sequence to be altered as follows:

1. In Prepurge Drive to High Fire position, the Run/Test Switch, when placed in the TEST position, holds in PURGE with the firing rate motor in the High Fire position.
2. In the measured PURGE sequence, the Run/Test Switch, when placed in the TEST position, causes the PURGE timing to stop. The firing rate motor is in the High Fire position.
3. In Purge Drive to Low Fire position, the Run/Test Switch, when placed in the TEST position, holds the burner sequence in PURGE with the firing rate motor in the Low Fire position.
4. In PFEP, the Run/Test Switch, when placed in the TEST position, stops the timer during the first eight seconds when a ten-second PFEP is selected or during the first three seconds when a four-second PFEP is selected, allows pilot-turn-down test and other burner adjustments to be made. This activates a 15 second flameout timer that permits pilot flame adjustment without nuisance safety shutdowns. The Run/Test Switch is ignored during PFEP for the RM7838B,C if terminals 8 and 9 are jumpered.
5. During Run, the Run/Test Switch, when placed in the TEST position, drives the firing rate motor to the Low Fire position.

NOTE: When the RM7838B,C is switched to the TEST mode, it stops and holds at the next Run/Test Switch point in the operating sequence. Make sure that the Run/Test Switch is in the RUN position before leaving the installation.

SETTINGS AND ADJUSTMENTS

Selectable Site-Configurable Jumpers

The RM7838B,C has a three site-configurable jumper option, see Fig. 8 and Table 7. If necessary, clip the site-configurable jumper with side cutters and remove the resistors from the Relay Module.

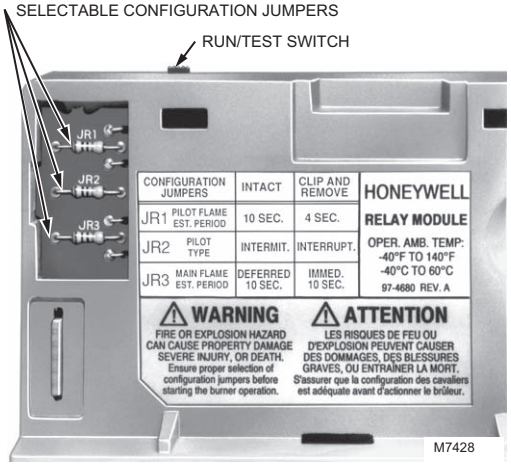

Fig. 11. Selectable site-configurable jumpers.

Table 8. Site Configurable Jumper Options.

Jumper Number	Description	Intact	Clipped
JR1	Pilot Flame Establishing Period (PFEP)	10 seconds	4 seconds
JR2	Pilot Valve	Intermittent	Interrupted
JR3[a,b,c]	Deferred or immediate Main Flame	Deferred	Immediate

[a] Unclipped: RM7838B,C waits indefinitely for a 120V Manual Open Valve input. When input is received, 10 second MFEP begins. The RM7838B,C also turns on terminal 9.

[b] Clipped: After the required PFEP, the RM7838B,C immediately goes to MFEP by outputting 120 Vac to the Main Valve terminal 9. At the end of the 10 second MFEP, if there is not an input on the Manual Open Valve terminal 17, the RM7838B,C goes to safety shutdown. If automatic main valves are used, a jumper is required between terminals 4 and 17.

[c] RM7838C1020 does not have JR3.

NOTE: SERVICE NOTE: Clipping and removing a site-configurable jumper enhances the level of safety.

IMPORTANT

Clipping and removing a site-configurable jumper after 200 hours of operation results in a nonresettable Fault 110 and a lockout.

Automation and Control Solutions
Honeywell International Inc.
1985 Douglas Drive North
Golden Valley, MN 55422

Honeywell Limited-Honeywell Limitée
35 Dynamic Drive
Toronto, Ontario M1V 4Z9
customer.honeywell.com

Honeywell

® U.S. Registered Trademark
© 2010 Honeywell International Inc.
66-1094—08 M.S. Rev. 09-10
Printed in U.S.A.