NEW DIGITAL MICROFLAT SERIES TYPES ND(M/E).. NDT(M/E).. ND(M/E)O.. NDT(M/E)O..

AUTOMATIC CONTROL DIGITAL SYSTEM FOR GAS, OIL OR BIOMASS BURNERS AND APPLIANCES

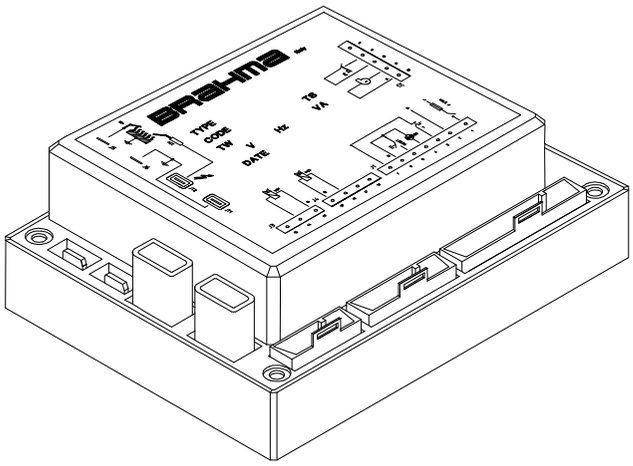

APPLICATION

The microcontroller-based controllers of the NEW DIGITAL MICROFLAT series are an evolution of the DIGITAL MICROFLAT "N" series and they are specifically designed to control burners with gaseous fuel (with or without fan in the combustion circuit), liquid or solid in non-permanent operation applications.

These systems are provided with non-volatile or volatile lockout, in the first case restarting the controller from a safety lockout condition can be accomplished only by a manual reset of the system, while in the second case restarting the controller from a safety lockout condition can be achieved only by the interruption of the power supply and its subsequent restoration (and not by switching the heating demand device).

The automatic controllers of this series are suitable for:

- Combi, Heating, Steam boilers;
- Hot air generators;
- Radiant tube heaters;
- Fan-assisted convector heater ;
- Water heater;
- Power washer;
- Furnaces;
- Monoblock burners;
- Premix, Biomass burners or decorative fireplaces.

The NEW DIGITAL MICROFLAT series keeps the main features and reliability of the previous MICROFLAT and DIGITAL MICROFLAT series, and in addition it's got accessories related to the control of wireless device, brushless motors, gas pressure and air flow rate and options related to the driving of auxiliary motors, direct current valves, modulating valves among which the new Brahma valve type VCMxx (with or without pressure control). Besides, this series can be employed also in appliances with liquid (oil) or solid fuel (biomass).

The flexibility of the microcontroller-base technology creates different possibilities related to the installation times and to the operation modes. The systems of this series are suitable to be used in burners of gas in accordance with EN746-2, EN676, EN525, EN1020 and EN1319 standards, of oil in accordance with part 2 of DIN4794 standard (December 1980 edition related to the hot air generators, only in version TW=20s and TS=5s) or of biomass in accordance with EN303-5.

FEATURES

The main features of this series are:

– **EC**- type certification (CE PIN **0476CQ0671**) in accordance with the European Gas Appliance Directive 2009/142/EC;
– In accordance with EN298:2012 (European Standard for automatic gas and oil burner control systems and flame detection) and with EN60730-2-5 (European Standard for automatic controls with C class software);
– A microcontroller based technology for precise and repeatable installation times, two independent safety contacts for driving the valve;
– Possibility to drive the Brahma modulating valve Type VCMxx and VCMxx *S (electrovalve with pressure sensor);
– Possibility to drive the first direct current valves by means of a high voltage modulator circuit or through a bridge rectifier (integrated);
– Output employable for the control of the second stage (intermittent pilot system), for the control of auxiliary fans or acting as a NO auxiliary contact (this contact is not isolated from the main supply voltage by reinforced isolation, therefore it not suitable to control SELV circuits – Safety Extra Low Voltage, e.g. 24V);

ПРОМЭЛЕКТРОНИКА / sales@prom-elec.com

- inbuilt ignition device completely of solid state design, highly efficient and equipped with a EMC filter-suppressor;
- Possibility of connecting a resistor (100 ÷ 470 Kohm) in series to the lockout signal output in order to prevent the controller damage in case the lockout button connections are inverted by chance with the lockout signal connections ;
- Connectivity:
  - to a user interface module with diagnostic and parameters setting functions;
  - or to sensor for the measurement of the flow and/or temperature of the air with safety shutdown or lockout.
  - or to sensor for the measurement of the gas pressure and adjustment (VCMxx * S BRAHMA valve);
  - or to adapter for the control of the brushless motors (i.e. BRAHMA B-FAN) and of the rotations with safety shutdown or lockout;
- Possibility to be connected to an infrared receiver for wireless control of the device (i.e., decorative fireplaces), in accordance with guidance B12 of the European Gas Appliance Directive 2009/142/EC (ex. 90/396/EEC);
- Flame detection using the rectification property of the flame (with electrode probe or by detecting of UV emissions with photodiode FD.., only for gas appliances)
- detecting visible light (with photo-sensors types FT, FC .. or by detecting of UV emissions with photodiode FD.., only for oil appliances)
- Electrical service life at max. declared loading >250.000 operations;
- without burner output limits (times and working function must be suitable to the application in the project engineering phase of the same);
- Direct ignition of the burner or ignition by means of an intermittent pilot;
- Multiple ignition attempts. In the standard mode, lockout condition with no flame detected at the end of safety time. Upon request, with option Ynn, it's possible to set nn number of recycle attempts before lockout.
- Possibility to be connected to phase-phase power supply systems.

Table 1 – Types and Main Features

Type	*Reset*	*V*[1]	*EV2*[2]	*TS*[3]	*Flame detection*
NDM11	Manual				***Electrode or Photodiode FD***
NDM12	Manual		*		
NDM31	Manual	*			
NDM32	Manual	*	*		
NDE11	Electrical				
NDE12	Electrical		*		
NDE31	Electrical	*			
NDE32	Electrical	*	*		
NDTM11	Manual			*	
NDTM12	Manual		*	*	
NDTM31	Manual	*		*	
NDTM32	Manual	*	*	*	
NDTE11	Electrical			*	
NDTE12	Electrical		*	*	
NDTE31	Electrical	*		*	
NDTE32	Electrical	*	*	*	
NDM31O	Manual	*			***Phototransistor FT Photoresistor FC or Photodiode FD***
NDM32O	Manual	*	*		
NDE31O	Electrical	*			
NDE32O	Electrical	*	*		
NDTM31O	Manual	*		*	
NDTM32O	Manual	*	*	*	
NDTE31O	Electrical	*		*	
NDTE32O	Electrical	*	*	*	

TECHNICAL DATA

Nominal power supply voltage[4]:		220-240V~ @ 50-60 Hz
	on request	110-120V~ @ 50-60 Hz
Power consumption:		30 VA
Operating temperature:		-20 ℃ ÷ +70 ℃
	on request	-20 ℃ ÷ +85 ℃
Humidity:		Max. 95% at +40 ℃
Protection degree:		IP00
Internal fuse:		4 A fast-blow type
External fuse (recommended):		3.15 A fast-blow type[5]
Max. total weight:		About 200 g

TIMES

Waiting/prepurge time (TW/TP):		0 … 240 s
Safety time (TS)	- GAS versions:	3 … 120 s
	- OIL versions:	3 … 10 s
	- BIOMASS versions:	0 … 1800 s
Spark ignition time (TSP):		(TS-1) s
Response time in case of flame failure (GAS versions):		< 1 s
Safety time during operation (OIL and BIOMASS versions):		< 1 s
Pre-ignition time (opt. Jnn):		0 … 60 s
Pre-charge time (opt. PCnn) [7]:		0 … TS s
Post-ignition time (opt. Bnn)		
- GAS versions:		0 … TS
- OIL and BIOMASS versions:		0 … 60s
Post-flame time (opt. PFnn) [7]:		0 … 240 s
Interruption flame time (opt. IFnn) [7]:		0 … 240 s
Post-purge times:		
- for main combustion motor:		0 … 1800 s
- for auxiliary motor:		0 … 500 s
Inter-waiting or Inter-purge time (opt. Inn):		1 … 240 s
Opening delay of EV2 or the auxiliary fan (opt. Wnn):		1 … 1800 s
Lockout delay due to:		
- flame simulation at startup (opt. Knn):		
	- GAS and BIOMASS versions:	0 … 60 s
	- OIL versions:	5 … 60 s
- Air pressure PA failure to close (opt. Qnn):		3 … 120 s
- TC[6] failure to close (opt. Qnn):		3s… 30 min

The times given on the burner control label correspond to the values guaranteed. The actual values differ slightly from the values given, pre-purge and waiting times can be longer and safety time shorter than their nominal values.

Recycles for flame loss (opt. Ynn, YnnRmm and Vnn):	0…10
Recycles for air pressure loss (opt. Snn):	0…10
Working range of Rotations Per Minute[8]:	0…300Hz
Painting:	Upon request

Remarks

(1) Combustion motor-fan

(2) EV2 valve: this output can be used to signal the flame presence to a remote device.

(3) Safety Thermostat: Opening the safety thermostat causes a recycle followed by lockout.

(4) Sinusoidal supply.

(5) The external fuse value must be selected according to the maximum applied load. This value must not anyway exceed the internal fuse value.

(6) Preheater thermostat – Only in the oil versions.

(7) Only in the biomass versions.

(8) Only versions with "SRn" and "SMn"options.
Motor rotations = (nnHz * 60sec.) / (Number of motor poles)

Maximum contacts rating

Room thermostat:		0.5 A cosφ≥0.4
EV1 valve:	– Standard or with opt. C1:	0.5 A cosφ≥0.4
	– With opt. C(2-3-4-5-6):	80mA$_{dc}$
EV2 valve – auxiliary fan:		0.5 A cosφ≥0.4
Combustion fan:		1.3* A cosφ≥0.4
Ignition transformer[9]:		1.3* A cosφ≥0.4
Preheater (only oil versions):		0.5 A cosφ=1
Lockout signal:	– Standard[10]:	50 mA cosφ=1
	– With opt. R[10]:	0.5 mA cosφ=1
User interfaces (opt. Un):		5 mAdc

(*) If the load exceeds the maximum capacity of the contact, then you can use a contactor relay.
(9) Only versions with "PR" option and in the oil versions
(10) Load driven by optotriac.

Maximum length of external components cables:

Room thermostat:	20 m
Reset – remote lockout signal:	20 m
Ignition device (high voltage)**:**	2 m
The rest of the cables[11]:	1 m

(11) Loads power supply, air pressure switch, sensor and connection cables to the user interface board.

Integrated ignition device[12]

Peak voltage[13]:		15 kV
	Upon request:	18 kV
Peak current:		800 mA
Spark repetition frequency[14]:		25 Hz
	Upon request:	1 … 50 Hz
Recommended discharge distance:		2 ÷ 4 mm
Consumption:		2.5 VA
Spark Energy:		20 mJ

(12) Available only for gas versions.
(13) Value measured with a 30 pF load.
(14) WARNING: The ignition device output is not safe to touch if the spark repetition frequency is higher than 25Hz; in this case installation must be provided with further protection.

Gas Pressure Sensor[15]

Maximum power consumption:	50mW
Maximum pressure:	16kPa
Working range of pressure:	0÷3.9 kPa ± 5%
Operating temperature:	0℃ ÷ +85℃
Temperature compensation:	+10℃ ÷ +60℃

(15) Inbuilt sensor in the gas solenoid valves Series VCMxx S * and connected to J8 gate (Fig. 5.c) of the device with SPn options.

Infrared Receiver[16]

Maximum power consumption:	20mW
Working range of supply:	3.3÷6 Vdc
Working range:	300÷9600 baud

(16) Infrared receiver is connected to J8 gate (Fig. 5.e) of the device with URn options.

Air Flow Rate and/or Temperature Sensor[17]

Maximum power consumption:	
- STF option	240mW
- ST option (only temperature):	12mW
Regulation range:	
- flow rate and precision:	2÷15m/s (+1÷-3)
- temperature with STF opt.	-20÷+85℃±9℃
- temperature with ST opt.:	-20÷+105℃±9℃
Working range:	-20÷+110℃
Response time:	< 3 s
Lockout due to air temperature out of range during start-up (opt. QTnn):	3 s… 10 min
Lockout due to air flow rate out of range during start-up (opt. QFnn):	3 s… 10 min

(17) Sensor is connected to J8 gate (Fig. 5.g and 5.h) of the device with STFn and STn options.

Motor Control[18]

Maximum power consumption:	225mW
Working range of supply:	5÷28 Vdc
Working range of PWM and HALL[19]:	1÷16kHz - 0÷500Hz
Response time:	< 3 s

(18) Adapter for brushless motors connected to J8 gate (Fig. 6.b) of the device with SRn or SMn options.
(19) Motor rotations = (nnHz * 60sec.) / (Number of motor poles)

Monitoring, connections, overall dimensions and fixing templates of sensors and infrared receiver are shown in paragraph "Accessories".

Under- and over voltage protection:
In case the power supply voltage is lower than about 150V$_{AC}$ (about 81V$_{AC}$ in the 110-120V$_{AC}$ versions) or higher than 280V$_{AC}$ (about 142V$_{AC}$ in the 110-120V$_{AC}$ versions) the controller will go to the safety shutdown. It will restart when the power supply voltage will be higher than about 156VAC (about 87V$_{AC}$ in the 110-120V$_{AC}$ versions) or lower than about 270V$_{AC}$ (about 148V$_{AC}$ in the 110-120V$_{AC}$ versions)

Flame monitoring with electrode – gas versions
The flame detector uses the rectification property of the flame.
An important safety aspect is that the controller is more sensitive to flame at start or during the waiting/pre-purge time (negative differential switching).

Minimum ionization current:		0.5 µA
	Upon request:	1.2 µA
Recommended ionization current:		3 ÷ 5 times the minimum one
Minimum insulation resistance of detection electrode and cable to earth:		≥ 50 MΩ
Maximum electrode parasitic capacity :		≤ 1nF
Maximum short-circuit current :		<200µA$_{ac}$

Flame monitoring with photosensor – oil versions
In this type of application, flame is detected by a sensor or a photocell or phototransistor. The following table shows the various models produced by BRAHMA and classified according to their sensitivity.

Type	***Sensitivity***	***Side***
FC11 or FT11	1.5 ÷ 6.5 lux	Lateral and frontal
FC13 red or FT13	1.5 ÷ 6.5 lux	Lateral and frontal
FC13 blue or FT13	1.5 ÷ 3.0 lux	Lateral and frontal
FC14 red or FT14	1.5 ÷ 6.5 lux	Lateral and frontal
FC14 blue or FT14	1.5 ÷ 3.0 lux	Lateral and frontal

Flame monitoring with photosensor UV type – gas/oil versions
The FD sensors are able to detect the ultraviolet light (UV spectral field from 290nm to 350nm) on application with blue flame burners. These sensors are suitable for gas and oil applications, the following table shows the various UV sensors classified according to their sensitivity.

Type	***Versions***	***Side***
FD1/S or FD1/N	NDxxxx	Frontal
FD2/S or FD2/N	NDxxxx	Lateral
FD1D or FD1/N	NDxxxxO	Frontal
FD2D or FD2/N	NDxxxxO	Lateral

Connections, overall dimensions and fixing templates are shown in paragraph "Accessories".

ПРОМЭЛЕКТРОНИКА / sales@prom-elec.com

Construction
The plastic case (and the PCB painting if requested) protect the controller against mechanical damage caused by crash, tempering, dust, and contact with external ambient. Thanks to a surface mounting components (which constitutes the “logic nucleus” of the system) and to the use of an innovative **patented** circuit of ours that generates the ignition discharge reducing to the minimum the emitted EMC, have allowed to reduce the dimensions of the controller PCB. So that even the most complicated version takes a very limited space. A varistor protects the controller from peak tensions on the mains supply due to, for instance, atmospheric discharges such as thunderbolts. An internal accessible fuse protects the controller relays in case of short circuit on the outputs (valves, fan and lockout signal).

Overall dimensions
The controllers of the NEW DIGITAL MICROFLAT series can be supplied in different executions but with the same case.
Figure 1 shows the controllers overall dimensions.

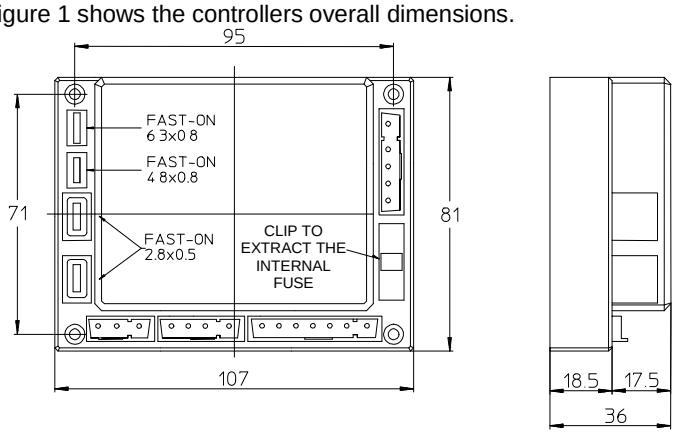

Fig. 1 – Overall dimensions

Possible fixing systems

Top:	self-tapping screw UNI6951AB 2.9x22 screw M3x22 UNI6107
Bottom:	screwplast thread forming screw ISO0003 F 3.5x13 screwplast thread forming screw ISO0003 F 3.9x13

Connection
Employing non-reversible connectors with a different number of poles makes the connection easy and reliable. One-way fast-on connectors of different sizes for ignition and detection electrodes permit their easy installation and replacement. The dual output ignition device allows spark generation on one point (2a), two points (2b) or between two electrodes isolated from the metal frame of the burner (2c), see Fig.2. The (2c) configuration assures a limited EMC emission. The (2d) configuration shows the wiring diagram of the ignition transformer in mono-electrode mode (single electrode ignition/flame detection, suitable only for gas applications with ignition transformer on board). To connect JT1, JT2 (Male Fast-on 2,8x0,5mm) it is recommended to use female Fast-on 2,8x0,5mm. To connect J5 (Male Fast-on 6,3x0,8mm) it is recommended to use female Fast-on 6,3x0,8mm. To connect J6 (Male Fast-on 4,8x0,8mm) it is recommended to use female Fast-on 4,8x0,8mm.

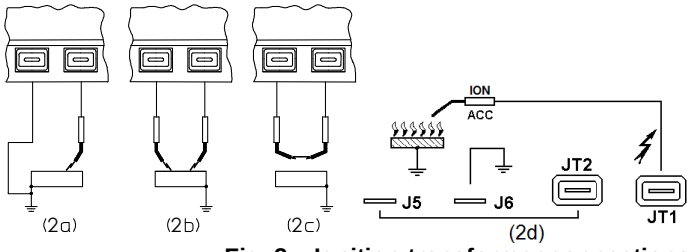

Fig. 2 – Ignition transformer connections

IMPORTANT NOTE
In order to further reduce tradio interference and increase the controller immunity ***it’s strongly recommended*** to insert a wire-wound power resistor with a value between 1kΩ e 4.7kΩ between the high voltage cables and the related discharge electrodes (see BRAHMA cables PC/PD types).

Strain relieves, a sufficient number of earth terminals and neutral terminals should be provided in the appliance or in external connection boxes. The control systems types NDTM…/NDTE… are provided with the possibility to be connected to a safety thermostat TS (as shown in Fig.3) which interrupts the EV1 gas valve power supply and causes a safety lockout after a delay which is the sum of waiting (or pre-purge) and safety times. If a self-resetting safety thermostat is applied (a condition existing exclusively in the manual rest controllers), the restoration time of this thermostat in the appliance must be longer than the total time needed for the maximum allowed number of re-ignition attempts in order to reach lockout.

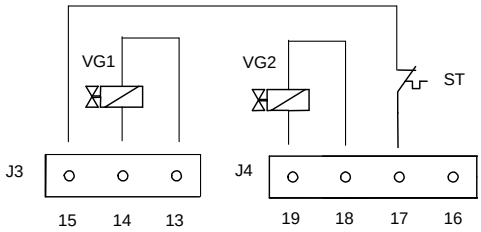

Fig. 3 – Safety thermostat connection

Standard accessories
The control systems are usually supplied with a kit of female connectors and/or a reset button (see Fig.2).
Do not fit terminals and female connectors of different types.

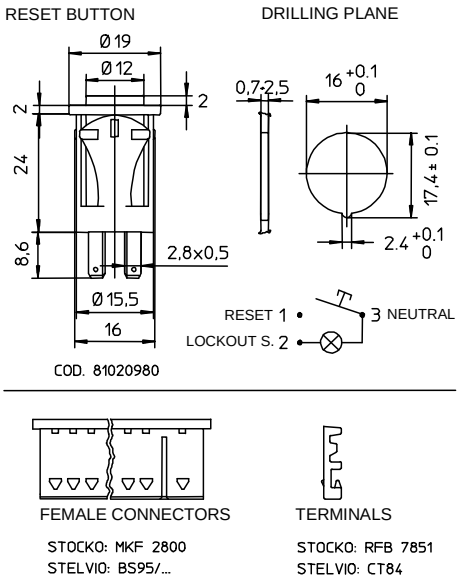

Fig. 4 – Standard accessories

The following figure shows the various types of flame sensors produced by BRAHMA and employable in the oil appliances.

Figure 4.a shows the sizes of the fixing templates (mm) and the wiring diagram, to the NDMO devices, of the FT or FC.. flame sensors.

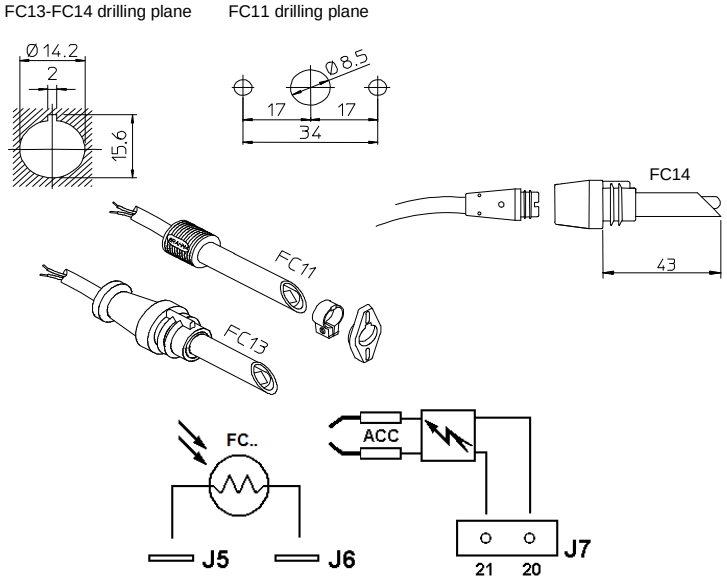

Fig.4a–Type, fixing systems and connections of FT, FC sensors

To connect flame sensors to J5, J6 (Male Fast-on 4,8x0,8mm) it is recommended to use female Fast-on 4,8x0,8mm.

Figure 5.a shows the sizes of the fixing templates (mm) and the wiring diagram, to the NDM or NDMO devices, of the FD.. flame sensors.

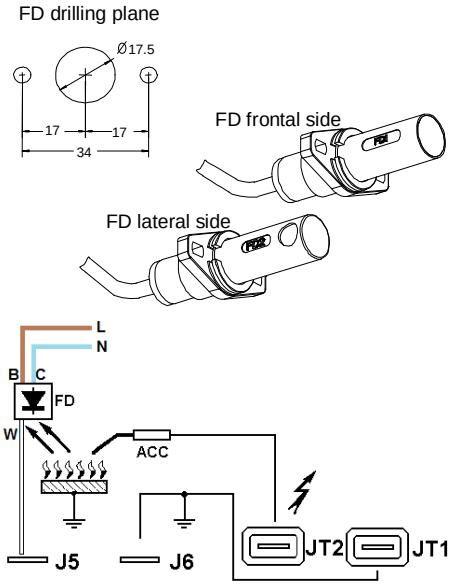

Fig.5a–Type, fixing systems and connections of FD sensors

To fix such flame sensors it is recommended to use Ø 4mm screws. To connect FD flame sensors to J5 (Male Fast-on 6,3x0,8mm) it is recommended to use female Fast-on 6,3x0,8mm.

Interfaces

In case option “Un” is required, the ignition and flame monitoring device can send and receive data according to a low speed communication protocol developed by BRAHMA S.p.A . The main function of this communication protocol is diagnosing the controller status and setting the modulation parameters in case the BRAHMA modulating valve type VCMxx is employed. The lockout signalling of the is not activated because all messages are managed by the interface.

In case option “URn” is required, the ignition and flame monitoring device can receive data and commands from BRAHMA transmitter according to a communication protocol developed by BRAHMA S.p.A. The main functions of this communication protocol are the on/off commands and the change of the fire intensity in case the BRAHMA modulating valve type VCMxx is employed.

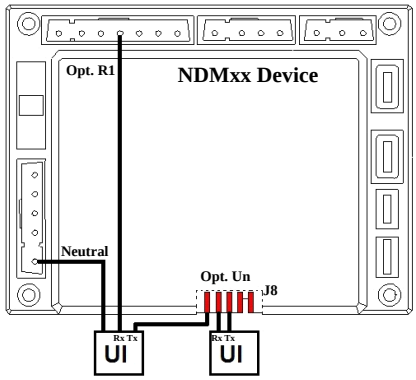

Fig.5.b – Connections of the User Interface with Un option

For more details refer to the technical notes relating to the interface modules for NDM devices.
All possible parings of the accessories connected to J8 gate are shown in figure 6.c.

Pressure Sensor Monitoring – Gas Versions

The system (BRAHMA solenoid gas valve VCMxx *S with inbuilt pressure sensor + NDM device with options SPn) allows to measure and stabilize the gas flow rate of the burner. The system does not need any mechanical adjustment, all parameters of the solenoid management are pre-loaded into the device memory. The values of the parameters, for example:

- Times of slow ignition.
- Maximum and minimum gas flow rate.

are chosen by the boiler manufacturer during product development and identified with the option SPn (Letter “n” represents the reference number of a specific adjustment).

Figure 5.c shows the connections type and the wiring diagram of BRAHMA solenoid gas valve VCMxx *S to the J8 gate of NDM devices with SPn options.

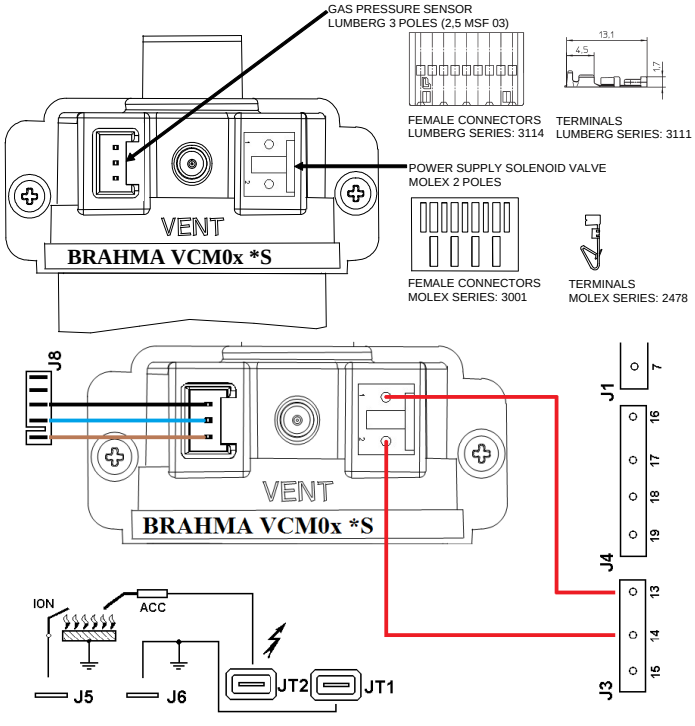

Fig. 5.c – Connections and wiring diagram of VCMxx *S.

All possible parings of the accessories connected to J8 gate are shown in figure 6.c.

Management of infrared receiver

The system (BRAHMA infrared receiver + NDM device with options URn) allows to receive the commands from BRAHMA infrared transmitter. All management commands are pre-loaded into the device memory. All commands, for example:

- on/off.
- up/down fire.

are chosen by the boiler manufacturer during product development and identified with the option URn (Letter “n” represents the reference number of a specific adjustment).

During operation, the contact of the heat request (T) of the NDM device must be in working position. Figure 5.a shows the overall dimensions (mm) of the transmitter, the sizes of the fixing templates (mm) of the receiver and the wiring diagram of the receiver to the J8 gate of NDM or NDMO devices with URn options.

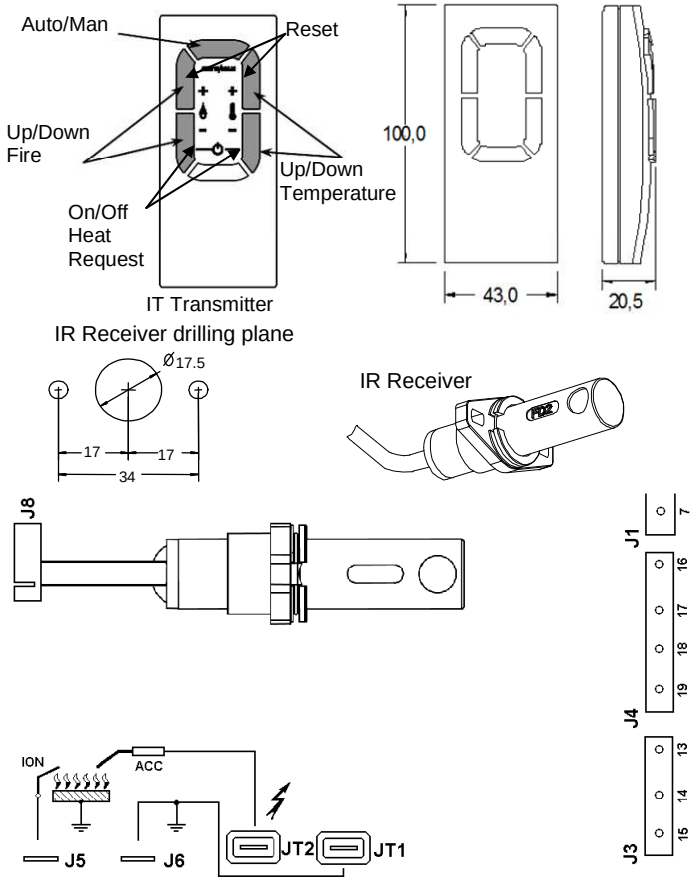

Fig. 5.e –Transmitter and Receiver dimensions, fixing and wiring diagram to NDM device with option URn.

The heat request, by the IR transmitter, is activated (or deactivated) by simultaneously pushing of the "down" buttons, while the reset is activated by simultaneously pushing of the "up" buttons (see fig. 5). The reset are limited to 5 actions every 15min. The functions up/down and auto/man of the IR transmitter can be set on request.

All possible parings of the accessories connected to J8 gate are shown in figure 6.c.

Flow rate/Temperature Sensor Monitoring

The system (with SF2 sensor + NDM device with options STFn or STn) allows to measure the air flow rate and temperature of the burner motor. The system does not need any mechanical adjustment, all parameters of the sensor management are pre-loaded into the device memory. The values of the parameters (air flow rate and temperature) are chosen by the boiler manufacturer during product development and identified with the option STFn or STn (Letter “n” represents the reference number of a specific adjustment). The system allows to identify incorrect working conditions, caused for example by a partial clogging of the burner.

This system performs an indirect measure of the combustion air flow rate and of the working temperature with stop functions or safety non-volatile lockout.

The system stops the working cycle when the air flow rate or air temperature is out of pre-loaded working range. As soon as the air flow rate and the air temperature are inside to working range, the system allows the start of the ignition cycle. The system stops the working cycle even for sensor corruption or for the disconnection of the sensor cable. In order to ensure a safety measurement, the NDM devices occur continuously the congruence of the two signals from the two NTC of SF2 sensor. An important safety aspect is that the NDM device is more sensitive at start or during the waiting/pre-purge time (negative differential switching). For example, the SF2 sensor installed in the intake duct, allows the indirect measurement of the flow rate and temperature of the combustion air. The SF2 sensor with option STn, unlike the STFn, allows only the measurement of the temperature of the combustion air. The system stops the working cycle with incorrect working conditions (or safety lockout with the options QTnn, VT, QFnn, VF).

The conditions for starting the cycle are the following:

Air temperature < lower limit
Air flow rate > upper limit (only with option STFn)

The conditions for stopping the cycle are at least one of the following:

Air temperature > upper limit
Air flow rate < lower limit (only with option STFn)

The lower and upper limits of flow rate and temperature of the ari combustion are fixed on request (see technical notes and specifications).

Figure 5.f shows the fixing templates (mm) and overall dimensions (mm) of the SF2 sensors.

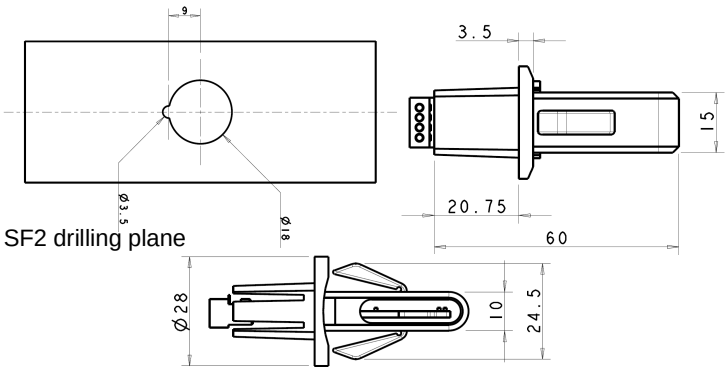

Fig. 5.f – Dimensions and fixing of SF2 sensors

Figures 5.g and 5.h show the wiring diagram of the SF2 sensors to the J8 gate of NDM devices with STn and STFn options.

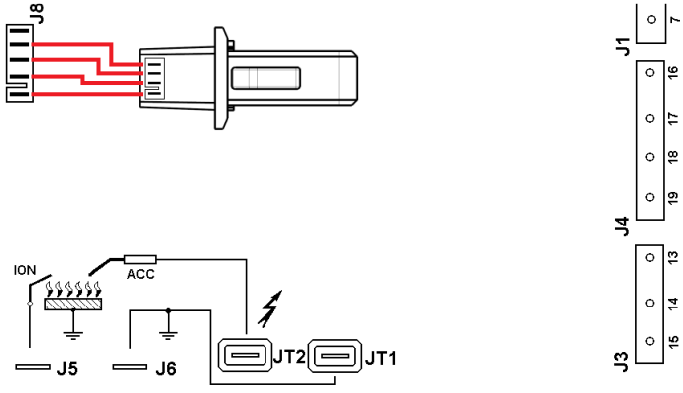

Fig.5.g–Wiring diagram of SF2 sensor with STFn option

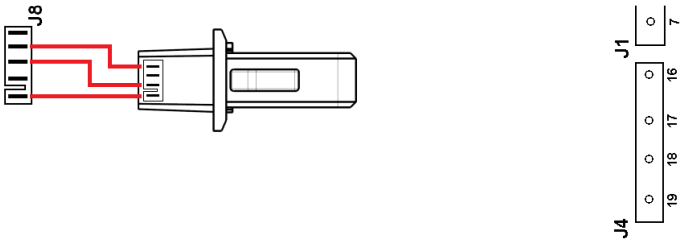

Fig.5.h–Wiring diagram of SF2 sensor with STFn option

All possible parings of the accessories connected to J8 gate are shown in figure 6.c.

Motor Control

The system (Motor adapter + NDM device with options SMn or SRn) is designed for premix applications and allows to drive (PWM) and to measure the rotations of a burner motor. The system does not need any mechanical adjustment, all management parameters of the rotations motor are pre-loaded into the device memory. The values of the parameters, for example maximum and minimum of the rotations motor are chosen by the boiler manufacturer during product development and identified with the options SMn or SRn (Letter "n" represents the reference number of a specific adjustment).

Motor adapter is not coupled with infrared receiver and the temperature/flow rate sensor SF2 (opt. STFn and STn). Figure 6.b shows the wiring diagram of rotations sensor to the J8 gate of NDM devices with SMn options.

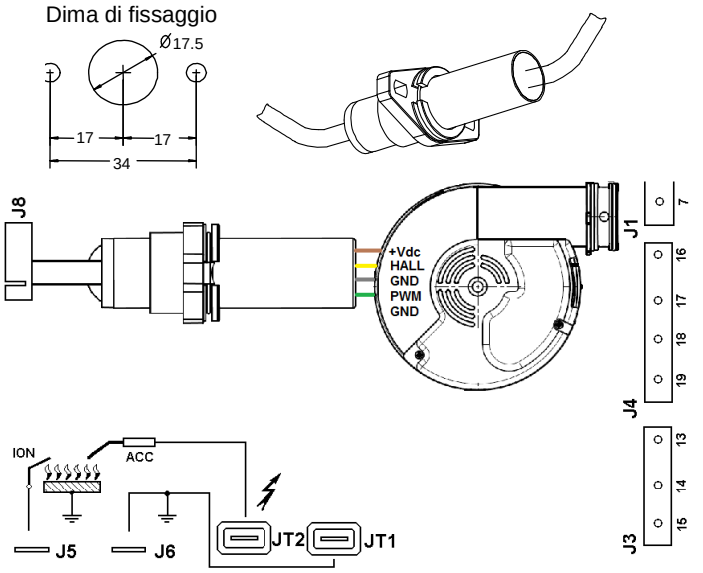

Fig. 6.b – Fissaggio e collegamento dell'adattatore motore.

To fix such flame sensors it is recommended to use Ø 4mm screws.
All possible parings of the accessories connected to J8 gate are shown in figure 6.c.

Connections to interfaces, sensors and infrared receivers.

Figure 6.c shows the position of the J8 gate of NDM devices to the interfaces, sensors and infrared receivers. The J8 connection gate is not SELV. This connection, without an appropriate isolation, is not usable with circuits of type Safety Extra Low Voltage. For the connection to the J8 gate is suitable a connector with 5-pin type Lumberg 3510 05 K23 2.5mm RAST.

To better understand the operation of the each accessories, please refer to the technical notes and specifications reserved for them.

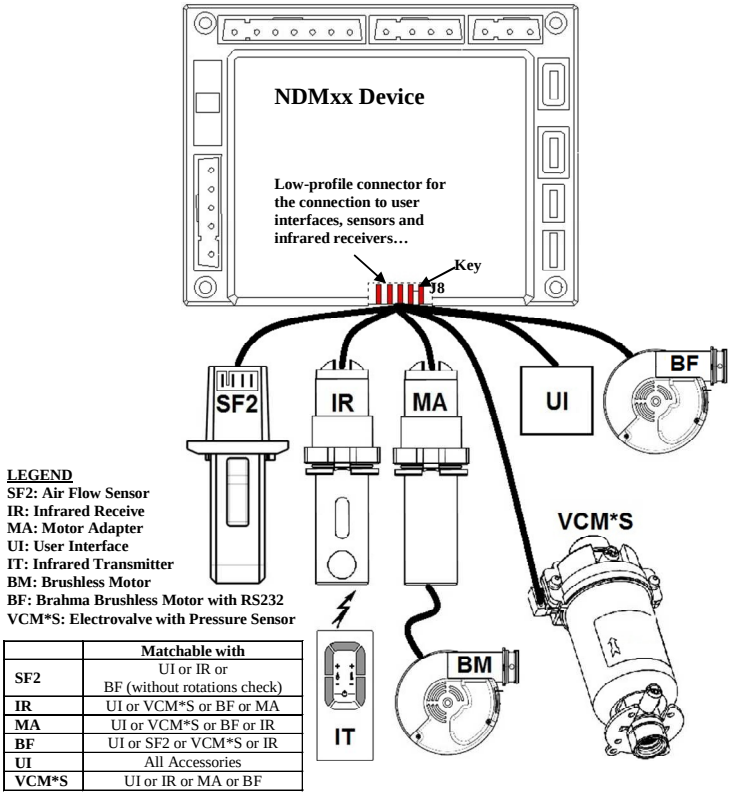

LEGEND
SF2: Air Flow Sensor
IR: Infrared Receive
MA: Motor Adapter
UI: User Interface
IT: Infrared Transmitter
BM: Brushless Motor
BF: Brahma Brushless Motor with RS232
VCM*S: Electrovalve with Pressure Sensor

	Matchable with
SF2	UI or IR or BF (without rotations check)
IR	UI or VCM*S or BF or MA
MA	UI or VCM*S or BF or IR
BF	UI or SF2 or VCM*S or IR
UI	All Accessories
VCM*S	UI or IR or MA or BF

Fig. 6.c – Connectivity of J8 Gate

Installation directions

- The controllers are safety devices; guarantee and responsibility of the manufacturer will be debarred if the products are tempered with by the user;
- The system is designed to stay in running position for less than 24h (system for non-permanent operation). Reaching this limit causes a regulation shutdown in order to allow the controller to check its efficiency.;
- The controller must be connected and disconnected without power supply;
- The controller can be mounted in any position;
- Avoid exposure to dripping water;
- A ventilated installation ambient and a quite low temperature ensure the longest life of the controller;
- Before installing or replacing the controller make sure that its type, code and times are those required;
- The appliance in which the controllers are installed must provide adequate protection against the risk of electric shock (at least IP20);
- The remote unlock button must be installed in proximity of the system, so that the system can be visible during reset;ù
- EMC emission requirements, according to the directive EN55014-1, shall be tested after the incorporation of the burner control system into the equipment.

Electrical installation

- The applicable national regulation and European standards (Ex. EN 60335-1 and EN 60335-2-102) related to the electrical safety must be respected;
- The gas versions, supplied with detection electrode, can be equipped with a polarity recognition. Not respecting the phase-neutral polarity causes a non-volatile lockout at the end of the safety time ;
- Before starting the system check the wiring carefully. Wrong connections can damage the controller and compromise safety;
- The earth terminal of the controller, the metal frame of the burner and the earth on the mains supply must be well connected;
- Avoid putting the detection cable close to power or ignition cables;

– Use a heat resistant detection electrode well insulated to ground and protected from possible moisture (or water in general);
– Use an ignition cable as short and straight as possible and keep it far from other conductors to reduce the EMC emission (max. length< 2m and insulation voltage >25 kV).

In case of live-neutral networks with unearthed neutral or live-live network (with star center not earthed) the controller can operate correctly by means of a built-in resistor.
In the gas versions and in case of a “partial” short circuit or dispersion between phase and earth, the tension on the detection electrode can be reduced till causing lockout of the controller due to impossibility of detecting the flame signal.

Checking at start
Check the controller before the first star-up, after every overhaul and after a long period of non-operation.
Before any ignition attempt make sure that the combustion chamber is free from gas, then make sure that:
– If the start-up attempt occurs without gas supply the controller goes to lockout at the end of safety time ;
– When gas flow is interrupted (while the controller is in running state) the power supply to gas valves is interrupted within 1 second and the controller proceeds to lockout after a recycle (or more than one recycle up to max. 10 according to the settings);
– Operating times and cycle are in compliance with the ones declared for the used controller type;
– The level of the flame signal is sufficient (see Fig. 7 and Fig. 8 for the measuring method to be adapted in case of controllers for gas and oil appliances respectively);
– The ignition electrodes are adjusted in the most stable way for a 2-4 mm air spark gap;
– The intervention of regulators, limiters or safety devices causes a shutdown of the controller according to the application type.

GAS versions - Operation
The following description refers to the standard operation cycle controllers. At every start the controller proceeds to a self-checking of its own components. During waiting time (TW) or pre-purge time (TP) the internal circuit monitors the correct functioning of the flame signal amplifier: A spurious flame signal or a fault in the amplifier which corresponds to the flame condition prevent the controller from starting. In the types provided with fan control, before pre-purge time starts, the controller checks the air pressure switch contacts to ensure a 'no air-flow' condition. Only if the test is positive the pre-purge time (TP) starts due to the commutation of the air pressure switch. At the end of the waiting (TW) or pre-purge time (TP) the EV1 valve and ignition device are energised and the safety time begins (TS). If flame is detected during the safety time the ignition device is de-energised and, in the models where it is provided, the main gas valve EV2 energized. Conversely, if no flame is detected during the safety time then at the end of the same the controller proceeds to lockout, the EV1 valve is closed, the ignition device is de-energised and the lockout signal is activated.
Flame failure during the safety time causes the ignition device to be activated within one second.

The conditions for the start-up working cycle are the following:
- Powered device and not in lockout state.
- Heat request (T) in working position.
- Air pressure (PA) in idle position.
- No flame or parasite flame.
- Sensor connected (gate J8) and with parameters inside the working range (only with option STn, STFn, SPn or SRn).

The conditions for the start-up of pre-purge time are the following:
- Powered device and heat request (T) in working position.
- Air pressure (PA) in working position.
- No flame or parasite flame.
- Sensor connected (gate J8) and with parameters inside the working range (only with option STn, STFn, SPn or SRn).

The conditions for the start-up of safety time are the following:
- Powered device and heat request (T) in working position.
- Air pressure (PA) in working position.
- Sensor connected (gate J8) and with parameters inside the working range (only with option STn, STFn, SPn or SRn).

The conditions for reach the working position are the following:
- Powered device and heat request (T) in working position.
- Safety thermostat in working position (only ND**T**xxx).
- Air pressure (PA) in working position.
- Sensor connected (gate J8) and with parameters inside the working range (only with option STn, STFn, SPn or SRn).
- Presence of flame signal.

The device exits the working position due to one or more of the following reasons:
- Unpowered device
- Heat request (T) in idle position.
- Safety thermostat in idle position (only ND**T**Mxxx).
- Air pressure (PA) in idle position.
- Sensor disconnected (gate J8) or parameters outside the working range (only with option STn, STFn, SPn or SRn).
- Loss of flame signal.

See cycle diagram to better understand the operation of each controller.

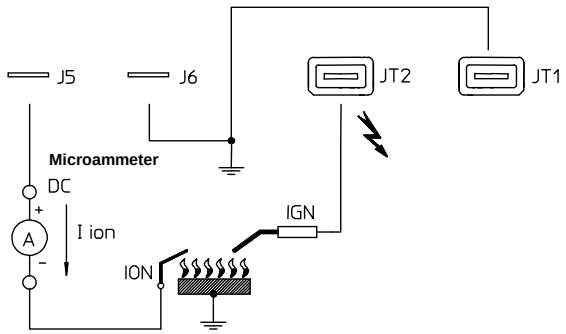

Fig. 7 – Flame signal measurement method in gas versions.

IMPORTANT NOTICE:
The measurement of the ionization current can be effected exclusively in the controllers configured for dual electrode.
In controllers configured for single electrode it’s dangerous for the user to insert a measurement instrument in series with the detection electrode.

OIL versions - Operation

The following description refers to the standard operation cycle controllers. At every start the controller proceeds to a self-checking of its own components. When the room thermostat is closet the preheater is energized immediately; once the correct oil temperature is obtained the preheater thermostat switches and signals the start of the ignition cycle to the controller: the burner motor and the ignition transformer are energized (Pre-purge time TP and pre-ignition time) and the operation of the flame amplifier is checked. Any fault leading to a spurious flame signal prevents the controller from starting which causes a lockout within 10 seconds. In case the preheater thermostat opens during pre-purge time, the controller deactivates the motor fan and the ignition transformer and proceeds to the waiting position. This condition remains till the preheater thermostat closes again; conversely the controller goes to lockout within 10 minutes. At the end of pre-purge time TP, the safety time begins and the controller energizes the EV1 valve. If no flame is detected within the end of safety time TS, then the controller goes to lockout and de-energizes the motor fan, the ignition transformer and especially the EV1 valve while the lockout signal is activated. Conversely, at the end of the safety time TS the ignition transformer is deactivated and the second stage valve EV2 is energized.

See cycle diagram to better understand the operation of each controller.

The conditions for the start-up working cycle are the following:

- Powered device and not in lockout state.
- Heat request (T) in working position.
- Pre-heater thermostat (TC) in working position.
- No flame or parasite flame.
- Sensor connected (gate J8) and with parameters inside the working range (only with option STn, STFn, SPn or SRn).

The conditions for the start-up of pre-purge time are the following:

- Powered device and heat request (T) in working position.
- Pre-heater thermostat (TC) in working position.
- No flame or parasite flame.
- Sensor connected (gate J8) and with parameters inside the working range (only with option STn, STFn, SPn or SRn).

The conditions for the start-up of safety time are the following:

- Powered device and heat request (T) in working position.
- Pre-heater thermostat (TC) in working position.
- Sensor connected (gate J8) and with parameters inside the working range (only with option STn, STFn, SPn or SRn).

The conditions for reach the working position are the following:

- Powered device and heat request (T) in working position.
- Safety thermostat in working position (only ND**T**MO).
- Pre-heater thermostat (TC) in working position.
- Sensor connected (gate J8) and with parameters inside the working range (only with option STn, STFn, SPn or SRn).
- Presence of flame signal.

The device goes out to the working position due to one or more of the following reasons:

- Unpowered device
- Heat request (T) in idle position.
- Safety thermostat in idle position (only ND**T**MO).
- Pre-heater thermostat (TC) in idle position.
- Sensor disconnected (gate J8) or parameters outside the working range (only with option STn, STFn, SPn or SRn).
- Loss of flame signal.

See cycle diagram to better understand the operation of each controller.

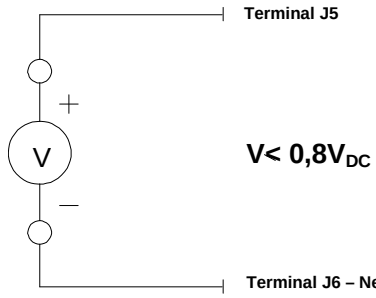

Fig. 8 – Flame signal measurement method in oil versions.

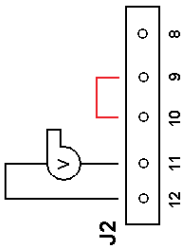

Fig. 8.a – Wiring diagram for the exclusion of the check of the pre-heater thermostat.

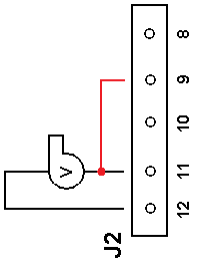

IMPORTANT NOTICE:
The exclusion of the air pressure switch in the GAS versions are intended for special applications where a check of the air flow is not required by the standard appliance.

Fig. 8.b – Wiring diagram for the exclusion of the check of the air pressure switch.

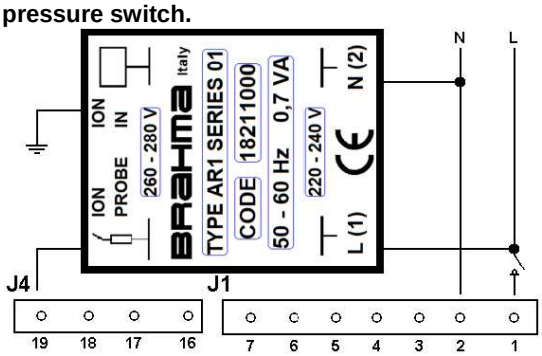

Fig. 8.c – Wiring diagram for external power flame amplifier (NDMxx with opt. AR1).

Operation cycle variation

The possible cycle variations of the controllers are as follows:

– *Option 6 ("A", "B"): ignition mode*

Standard mode; the ignition device output is activated during all safety time TSP=TS-1. On request; the spark can be activated during all the safety time TS (option "A") or deactivated, with or without delay, when a flame signal is detected ("B" and "Bnn" Options).

– *Option 11 ("W", "Wnn"): opening mode of the second stage valve EV2 or of the auxiliary fan*

Standard mode; the output of the second stage (or auxiliary device) is activated when a flame signal is detected. On request; the second stage valve or the auxiliary device can be energized at the end of the safety time (options "W") or with a delay (expressed in seconds) settable upon request (option "Wnn").

– *Option 12 ("K", "Knn"):*

Standard mode; if a spurious flame is detected at start-up or during waiting/prepurge/preignition time, the device stops the cycle, without lockout (without limit, continuous prepurge stage). On request; if a spurious flame is detected at start-up or during safety/prepurge time, the controller proceeds to immediate lockout (option "K") or with a delay (expressed in seconds) settable upon request (option "Knn").

– *Option 13 ("Qnn"): failure or insufficiency of air flow at start-up or preheater thermostat failure to close (OIL versions)*

Standard mode; if the device detects no commutation of the air pressure switch or the preheater thermostat (oil versions) during start-up (or waiting/prepurge time), it stops the cycle, without lockout (without limit, countinuos prepurge). On request; the device proceeds to immediate lockout ("Q" Option) or with a delay of nn seconds (settable upon request with "Qnn" Option).

– *Option 14 ("S", "Snn"): failure or insufficiency of air flow or preheater thermostat failure to open (OIL versions) in running position*

Standard mode; if the device detects a loss of air pressure switch or the preheater thermostat (only oil versions) during the working position, then it stops the cycle, without lockout (without limit, continuous prepurge stage). On request; in case of air flow failure or preheater thermostat failure to open (only OIL versions) in operation, the controller goes to lockout immediately (option "S") or after "nn" number of events (option "Snn").

– *Option 15 ("V", "Vnn"): Flame failure in running position*

Standard mode; recycle without lockout (without limit, continuous prepurge) with flame failure in running position. On request; in case of flame failure in operation, the controller proceeds to lockout immediately (option "V") or after "nn" number of events (option "Vnn").

– *Option 17 ("Pnn", "PTnn", "CTnn"): post-purge time on the main combustion motor fan*

Standard mode; without any post-purge time on the main combustion motor fan output in case of heating demand failure. On request; a post-purge action on the main combustion motor fan is effected (the time is settable upon request) at the end of the heat request during operation. With option "Pnn" post-purge is effected regardless of heating demand; conversely, with option "PTnn" post-purge can be interrupted by the heating demand restoration and consequently the controller goes to an ignition recycle. On request; with "CTnn" Option, post-purge of nn seconds due to shut off in running position (settable upon request). Post-purge, with "CTnn" option, can be interrupted by the heating demand restoration and consequently the device goes to an ignition cycle.

Option 18 ("Onn"): post-purge time on the auxiliary motor

Standard mode; without any post-purge time on the auxiliary fan output in case of heating demand failure. On request; a 1 to 500 s post-purge action on the auxiliary fan is effected (the time is settable upon request). This option can be implemented only in the controllers provided with auxiliary fan management (option "T1").

– *Option 19 ("Ynn", "YnnRmm"): recycle attempts*

Standard mode; the device proceeds to immediate lockout (without recycle) if the flame isn't detected at the end of safety time. On request, with "Ynn" option, upon failure to ignite or flame failure during the running condition the device proceeds to lockout after "nn" recycle attempts (the "nn" attempts number is settable upon request). On request, with "YnnRmm" option, the "nn" attempts number is restored with "mm" upon flame failure during the running condition (i.e. Y3R0 recycle attempts according to EN646 and EN746-2).

– *Option 20 ("Dnn"): recycle attempts due to ignition or flame failure in running position*

Standard mode; the recycle attempts due to flame failure ("Vnn" Option) are independent from the multiple ignition attempts ("Ynn" Option), for example if in the device "V3" and "Y5" options are available it carries out:

- 3 recycles due to flame failure and 5 ignition attempts (the sum is 8 ignition cycles).

On request; with "D" option, the controller makes "nn" number of recycles due to ignition failure at the end of safety time or to flame failure in running position.

– *Option 21 ("Inn"): inter-waiting or inter-purge time*

Standard mode; without interwaiting/interpurge. On request; with "Inn" option, a waiting or pre-purge time (expressed in seconds) starts after a failed ignition attempt and before the next recycle attempt..

– *Option 23 ("G", "GZ", "GP"): Air pressure switch or preheater thermostat checking*

Standard mode; the device performs the ignition cycle and checks the air pressure switch (PA) or the preheater thermostat (TC). On request, with "G" option, the controller starts its ignition cycle without checking the air pressure switch (in the gas versions) or the preheater thermostat (in the oil versions). On request, with "GZ" option, the device performs the ignition cycle with the check of air pressure switch or preheater thermostat only during start-up (without check in working position). On request, with "GP" option, the device (only oil versions) performs the ignition cycle without checking of the preheater thermostat, but with checking of the air pressure switch. When the signal (PA, TC) fails to switch during start-up, the device stops the cycle (or it locks out only in combination with "Q" Option), and this condition can change only with the commutation of the signal (PA, TC and without "Q" option). The device proceeds to an immediate safety shut down (or lockout only in combination with "S" Option) due to signal failure (PA, TC) during operation.

– *Option 24 ("Jnn"): pre-ignition time*

Standard mode; without any pre-ignition (gas versions), with pre-ignition (oil versions, the pre-ignition time coincides with the pre-purge time). On request; the transformer is activated at the end of the waiting/purge time and before the beginning of the safety time (time is settable upon request.

NOTE: in the OIL versions the pre-ignition time coincides with the pre-purge time.

– *Option 27 ("STFn", "STn", "SRn" and "SPn"): auxiliary accessories*

Standard mode; the device is without auxiliary sensors. On request, with SF2 sensor and "STF" option, the device performs the ignition cycle with the check of flow rate and temperature of the air. The device stops the working cycle if the values are out of allowed range (the values are settable upon request). The device, with "STFn" and "QFnn" options, performs a lockout during start-up if the values are out of allowed range. The device, with "STFn" and "VF" options, performs a lockout during operation if the values go outside of allowed range.

On request, with SF2 sensor and "ST" option, the device performs the ignition cycle with the check of air temperature. The device stops the working cycle if the values are out of allowed range (the values are settable upon request). The device, with "STn" and "QTnn" options, performs a lockout during start-up if the values are out of allowed range. The device, with "STn" and "VT" options, performs a lockout during operation if the values go outside of allowed range.

On request, with "SRn" option, the device performs the ignition cycle with the check of rotation motor. The device stops the working cycle if the values are out of allowed range (the values are settable upon request). The device, with "SRn" and "QFnn" options, performs a lockout during start-up if the values are out of allowed range. The device, with "SRn" and "VF" options, performs a lockout during operation if the values go outside of allowed range.

On request, with "SPn" option, the device performs the ignition cycle with the check of pressure sensor (electrovalve VCMxx *S BRAHMA). The adjustment values (times of slow ignition, maximum and minimum gas flow rate) are settable upon request.

– *Option 32 ("FC"): parasite flame or spurious light compensation*

Standard mode, the device does not compensates the parasite flame (electrode probe) or spurious light (photocell sensor). On request, with "FC" option, the device performs the ignition cycle compensating the parasite flame or spurious light during the start-up. In the gas devices the compensation can change from 0 to 1.25uA, while in the oil devices from 1MΩ to 20.5KΩ

– *Option 33 ("PC"): Pre-charge of the fuel (biomass).*

Standard mode, the device loads the fuel for all safety time TS. On request, only in the devices for biomass and with "PCnnn" option, the device loads the fuel only in the first nnn seconds of the safety time TS.

– *Option 34 ("PF"): Action after presence of flame during ignition (biomass).*

Standard mode, the device does not interrupt the duration of the safety time TS. On request, only in the devices for biomass and with "PFnnn" option, the device interrupts the safety time TS in the case of continuous presence of the flame for nnn seconds.

– *Option 35 ("IF"): Action after an interruption of flame during operation (biomass).*

Standard mode, the device performs an immediate safety shutdown of the fuel and it does not wait the re-ignition of the flame. On request, only in the devices for biomass and with "IFnnn" option, the device performs an immediate safety shutdown of the fuel and it waits the re-ignition of the flame for nnn seconds.

Stop Operation Diagnosis

On request (with option RLn), the device is able to signal the stop conditions of the working cycle through the lock-out signal. The lock-out signal is turned on for a number of times that depends on the anomaly type with a pause of 2sec. between a series of blinks and the next.

Table of Anomalies Codes

Code of lockout signal	Potential Anomalies
0 Always off	None Anomaly of the working cycle.
1 switching on •	Working cycle stopped due to the presence of the flame signal (parasite) at the start-up of the burner.
2 switching on • •	Working cycle stopped due to the failure to close of the air pressure contact or the preheater thermostat (only oil versions).
3 switching on • • •	Working cycle stopped due to the stuck contact of the air pressure (close at the start-up of the burner).
4 switching on • • • •	Working cycle stopped due to values out of range of the sensor (only with opt. STn, STFn).
5 switching on • • • • •	Working cycle stopped due to the connection failure of the sensor (only with opt. STn, STFn).
Always on	Device in lock-out state.

It's possible, upon request, to change the stop cycle codes of lock-out signal.

Controller reset

Non-volatile lockout (manual reset)

When the controller goes to a non-volatile lockout, in order to reset the system the reset button must be pressed till the lockout signal is shut off.

Volatile lockout (electrical reset)

In case of a volatile lockout the controller can be reset by interrupting and then restoring the power supply. It's not possible to reset the system by shutting off the heating demand device.

NOTES FOR THE DISPOSAL OPERATION

The controller contains electronic components and it must not be disposed of as a domestic waste. For the disposal operation refer to the local rules concerning special waste.

Lock-out Diagnosis

In lockout condition with the pushing of the unlock button for more than 5 sec., the diagnostic function is activated (alarm signal with blinks). The alarm signal is turned off for a number of times that depends on the lockout type with a pause of 2sec. between a series of blinks and the next. The table below shows the lockout type or the malfunctioning with the number of blinks. The table below shows the meaning of the lockout code as a function of the number of shutdowns.

Table of Lockout Codes

Code of lockout signal	Potential Cause
2 shutdowns • •	Flame failure at the end of safety time «TS»: - Defective or soiled fuel valves - Defective or soiled flame detector - Poor adjustment of burner or no fuel - Defective ignition equipment
3 shutdowns • • •	Failure to close of the air pressure switch: - smoke duct clogged. - air pressure doesn't work. Only with Q option.
3 shutdowns • • •	Failure to close of the preheater thermostat switch, preheater doesn't work. Only NDMO with Q option.
4 shutdowns • • • •	Air pressure switch stuck to working position, air pressure doesn't work. Only with Q option.
5 shutdowns • • • • •	Extraneous light/Flame simulation at start-up, flame probe dirty or damaged. Only with K option.
6 shutdowns • • • • • •	Failure of air pressure switch with burner in working position: - smoke duct clogged. - air pressure doesn't work. Only with S option.
7 shutdowns • • • • • • •	Failure of flame with burner in working position: - Fuel valve doesn't work. - Flame sensor doesn't work. - Defects in the calibration of the burner or no fuel. Only with V option.
8 shutdowns • • • • • • •	Values of temperature sensor out of range with burner in working position. Only with STx + VT options.
9 shutdowns • • • • • • • •	Values of temperature sensor out of range at start-up of the burner. Only with STx + QT options.
10 shutdowns • • • • • • • • •	Failure of temperature sensor, only with VT o QT options.
11 shutdowns • • • • • • • • • •	Values of flow rate sensor or hall sensor (rotation motor) out of range with burner in working position. Only with STFn + VF or SRn + VF options.
12 shutdowns • • • • • • • • • • •	Values of flow rate sensor or hall sensor (rotation motor) out of range at start-up of the burner. Only with STn + QT options.
13 shutdowns • • … • •	Failure of temperature sensor or hall sensor (rotation motor), only with VF o QF options.
17-20 shutdowns • • … • •	Generic internal failure.

During the time cause of fault diagnosed, the control output are deactivated (the burner remains shut down, lockout condition). Diagnostics of the cause of fault is quit and the burner is switched on again by resetting the burner control. Press the lockout reset button for about 1 sec. (< 3 seconds).

CONTROLS DENOMINATION

Type	**Options**
ND (1) (2) (3) (4) (5)	(6) … (37)

Type description

(1) **Safety thermostat**
- No letter: Safety thermostat not available. Standard mode
- T: With safety thermostat

(2) **Type lockout**
- M: Non –volatile lockout
- E: Volatile lockout

(3) **Combustion motor fan**
- 1: Not available
- 3: Available

(4) **Valve**
- 1: Direct ignition
- 2: Intermittent first stage

(5) **Ignition transformer – Flame monitoring version**
- No letter: Flame Controller with electrode or FD photo-sensor – Integrated ignition transformer. This is the standard mode
- PR: Flame Controller with electrode or FD photo-sensor – Remote electronic ignition transformer.
- O: Flame Controller with FT, FC or FD photo-sensor – Remote electronic ignition transformer

Options description

(6) **Ignition mode**
- No letter: Ignition spark operates for TSP time (TS-1). Standard mode
- A: Ignition spark operates for TS
- Ann: Ignition spark operates for TSP=TS-nn (nn seconds)
- B: Ignition spark is switched off when flame presence is detected
- Bnn: ignition spark is switched off when flame presence is detected, with delay of nn seconds.

Remark: *Gas applications: options "A", "B" and "Bnn" are available in dual-electrode version (separate ignition and detection electrodes) only, the delay of the "Bnn" option is limited by the duration of the TS (none post-ignition).*
Other applications: the delay of the "Bnn" option is used for post-ignition.

(7) **Peak ignition voltage of the integrated transformer (GAS version only)**
- No letter: 15 kV. Standard mode
- H: 18 kV

(8) **Spark frequency of the ignition transformer**
- No number: 25 Hz. Standard mode
- nn: See "Ignition transformer" in *TECHNICAL DATA* paragraph

(9) **First stage gas valve EV1 and Working feature**
- No letter: Not available. Standard mode
- M1: $230V_{DC}$ valve with an embodied rectification bridge (Graetz) and a protection resistor against peak current
- M2n: BRAHMA valve type VCM0x
- M3n: BRAHMA valve type VCM34
- Mn1: gas valve used for intermittent first stage (see *"TECHNICAL DATA"* and *"OPERATION CYCLE"* paragraph)
- Mn2: gas valve used for slow opening applications (see *"TECHNICAL DATA"* and *"OPERATION CYCLE"* paragraph)
- Mnn*: valve used for applications with a specific function.

***** ***Remark***: *Letter "n" represents the reference number of a specific function. Example with option M21: output valve configured to BRAHMA type VCM0x used in applications with intermittent first stage. Example with option M32: output valve configured to BRAHMA type VCM34 and used in applications with slow opening function. More details are available in NDM controller data sheet.*

(10) **Opening of the second stage gas valve EV2 or the auxiliary combustion motor when the flame is present**
- No letter: No delay time . Standard mode
- W: at the end of the TS safety time
- Wnn: at the end of the TS safety time with delay of nn sec. on request (see *"TECHNICAL DATA"* paragraph)

(11) **Lockout for flame simulation**
- No letter: Not available (the control remains in continuous waiting/pre-purge state). Standard mode
- K: Lockout condition
- Knn: Lockout condition with delay if requested (see *"TECHNICAL DATA"* paragraph)

(12) **No or insufficient air flow at starting (gas versions); no switching of the thermostat TC at starting (oil versions)**
- No letter: The controller remains in stand-by condition (gas version); or proceeds to lockout condition after 10 min from the starting cycle (oil version). Standard mode
- Qnn: Lockout condition with delay if requested (see *"TECHNICAL DATA" paragraph*)

Options description

(13) **No or insufficient air flow (gas versions) at running or thermostat TC opening (oil versions) at running**

No letter: Safety shutdown followed by stand-by condition. Standard mode

S: Lockout condition without delay

Snn: The controller proceeds to the lockout condition after a certain number "nn" of air pressure switch failures or preheater thermostat failures in running position.

(14) **Flame failure at running**

No letter: Recycling. Standard mode

V: Lockout condition without delay

Vnn: The controller goes to lockout condition after a "nn" number of losing flame signal from running position. (see *"TECHNICAL DATA" paragraph*)

(15) **Connection to the mains supply (available for Flame Controller with electrode only)**

No letter: device polarized (phase sensitive) for Live-Neutral supply networks. Standard mode.

N: device not polarized for Live-Neutral supply networks.

N1: device not polarized for Live-Neutral and Live-Live supply networks.

(16) **Post-purge of the main motor fan**

No letter: No post-purge. Standard mode

Pnn: The post-purge time is set if requested (see *"TECHNICAL DATA"* paragraph) and it cannot be interrupted by the heating demand restoration

PTnn: The post-purge time is set if requested (see *"TECHNICAL DATA"* paragraph) and it can be interrupted by the heating demand restoration

Cnn: post-purge time of nn seconds due to shut-off in running position, it cannot be interrupted by the heating demand restoration

CTnn: post-purge time of nn seconds due to shut-off in running position, it can be interrupted by the heating demand restoration

(17) **Post-purge of the auxiliary motor (with option "T1" only)**

No letter: No post-purge. Standard mode

Onn: The post-purge time is set if requested (see *"TECHNICAL DATA"* paragraph) and it cannot be interrupted by the heating demand restoration

(18) **Recycle attempts due to ignition failure**

No letter: Single ignition cycle after a controller shut down. Standard mode

Ynn: nn multiple recycle attempts without restoring of recycle attempts in operation (see *"TECHNICAL DATA"* paragraph)

YnnRmm*: nn multiple recycle attempts, with restoring of mm recycle attempts in operation (see *"TECHNICAL DATA"* paragraph)

***** ***Remark***: *Y3R0 3 recycles according to EN676 and EN746-2, single attempt to recycle upon flame failure during the running condition.*

(19) **Recycle attempts due to ignition or flame failure in running position**

No letter: No recycle attempts due to ignition failure and no recycle attempts due to flame failure in running state, are independent from each other. Standard mode

Dnn: Number of recycle attempts due to ignition failure and number of recycle attempts due to flame failure in running state , are dependent from each other.

(20) **Inter-waiting or inter-purge time**

No letter: No inter-waiting or inter-purge time. Standard mode

Inn: The inter-waiting/inter-purge time is set if requested (see *"TECHNICAL DATA"* paragraph)

(21) **Unlock input**

No letter: High voltage reset input. Standard mode.

RSL: Low voltage reset input.

(22) **Lockout indicator output**

No letter: High voltage output without any protection against cabling mistakes of the reset push button. Standard mode

R: Presence of an internal resistor to protect the reset push button against the inversion of its connections

R1: Output for the driving of low voltage signaling.

RLn*: diagnostic and/or operating messages (see "Lock-out Diagnosis" and "Stop Operation Diagnosis" paragraph).

***** ***Remark***: *Letter "n" represents the reference number of a specific mode of diagnostic and/or operating messages. More details are available in user interface module of NDM controller data sheet.*

(23) **Checking of the air pressure switch (gas and oil versions) or the preheater thermostat (oil versions)**

No letter: Checking of the air pressure switch or the preheater thermostat. Standard mode

G: Without checking of the air pressure switch or the preheater thermostat

G1: checking of the air pressure switch compatible with 3 wires.

GZ: with checking of the preheater thermostat or air pressure switch at start-up (without checking in working position).

GP: without checking of the preheater thermostat and with checking of the air pressure switch (only oil versions).

Remark: *controls with option "G" are intended for special applications where a check of the air flow is not required by the standard appliance.*

(24) **Pre-ignition**

No letter: Without pre-ignition. Standard mode

Jnn: The pre-ignition time is set if requested (see *"TECHNICAL DATA"* paragraph)

Remark: *Option "J" is available in dual electrodes version only (separate ignition and ionization electrodes).*

(25) **User interface**

No letter: No user interface. Standard mode

Un * connection for user interface module BRAHMA (see *"TECHNICAL DATA"* and "*INTERFACE*" paragraph)

URn*: connection for BRAHMA infrared receiver.

***** ***Remark***: *Letter "n" represents the reference number of the user interface. More details are available in user interface module of NDM controller data sheet.*

Options description

(26) **Second stage valve EV2 output – Auxiliary combustion motor fan – Auxiliary contact**

No letter: Second stage gas valve EV2 output (intermittent pilot appliances). Standard mode

T1: Auxiliary combustion motor fan output

T2: No auxiliary contact (this contact is not isolated from the main supply voltage by reinforced isolation, therefore it not suitable to control SELV circuits – Safety Extra Low Voltage, e.g. 24V)

Tn*: auxiliary output.

***** ***Remark***: *Letter "n" represents the reference number of a specific auxiliary output. More details are available in user interface module of NDM controller data sheet.*

(27) **Auxiliary Accessories.**

No letter: No sensor reading. Standard mode.

STFn*: reading of the SF2 sensor with STF option (see "*Flow rate/Temperature Sensor Monitoring*" paragraph)

STn*: reading of the temperature sensor with ST option (see "*Flow rate/Temperature Sensor Monitoring*" paragraph)

SRn*: reading of the rotation sensor without motor modulation (see "*Motor Control*" paragraph).

SMn*: reading of the rotation sensor with motor modulation (see "*Motor Control*" paragraph).

SPn*: reading of the pressure sensor (see "*Pressure Sensor Monitoring*" paragraph, BRAHMA valve type VCMxx *S with pressure sensor).

***** ***Remark***: *Letter "n" represents the reference number of a specific operation mode. More details are available in user interface module of NDM controller data sheet.*

(28) **Action after reaching the limit temperature at start-up.**

No letter: the control remains in continuous waiting/pre-purge state. Standard mode.

QTnn: Lockout condition with delay of nn sec. on request (see "*TECHNICAL DATA*" paragraph)

Remark: *option available only with STFn and STn options.*

(29) **Action after reaching the limit temperature during operation.**

No letter: Safety shutdown followed by continuous waiting/pre-purge state. Standard mode.

VT: Lockout condition without delay.

Remark: *option available only with STFn and STn options.*

(30) **Action after no (or insufficient) air flow rate (or motor rotation) at start-up.**

No letter: Safety shutdown followed by continuous waiting/pre-purge state. Standard mode.

QFnn: Lockout condition with delay of nn sec. on request (see "*TECHNICAL DATA*" paragraph)

Remark: *option available only with STFn and SRn options.*

(31) **Action after no (or insufficient) air flow rate (or motor rotation) during operation.**

No letter: Safety shutdown followed by continuous waiting/pre-purge state. Standard mode.

VF: Lockout condition without delay.

Remark: *option available only with STFn and SRn options.*

(32) **Compensation of the parasite flame or spurious light.**

No letter: No compensation. Standard mode.

FC: parasite flame (electrode probe) or spurious light (photocell sensor) is compensated at start-up of the burner.

Remark: *the device, during the start-up of burner compensates the parasite flame or spurious light. In case of no parasite flame or spurious light, the minimum value of the sensitivity of the device is the declared value. In case of the parasite flame or spurious light, the minimum value of the sensitivity of the device is automatically compensated during the start-up sequence. In the gas devices the compensation can change from 0 to 1.25uA, while in the oil devices from 1MΩ to 20.5KΩ*

(33) **Pre-charge of the fuel.**

No letter: the fuel charge operates for all TS time. Standard mode.

PCnnn: the fuel charge is limited to the first nnn seconds (T_{pc}<TS) of the safety time TS.

Remark: *option available only in the devices for biomass fuel.*

(34) **Action after presence of flame during ignition.**

No letter: without interruptions of the safety time TS. Standard mode.

PFnnn: interruption of the safety time TS (>T_{pc}) in the case of continuous presence of the flame for nnn seconds (T_{pf}).

Remark: *option available only in the devices for biomass fuel.*

(35) **Action after an interruption of flame during operation.**

No letter: safety shutdown without waiting for the re-ignition of the flame. Standard mode.

IFnnn: safety shutdown with waiting of nnn seconds for the re-ignition of the flame during operation (T_{if}).

Remark: *option available only in the devices for biomass fuel.*

(36) **Writing parameters to non-volatile memory.**

No letter: writing parameters disabled. Standard mode.

WP: writing parameters enabled.

Remark: *option available only in development. Writing, by user interface, of some operating parameters (i.e. Auxiliary Accessories).*

(37) **Power flame amplifier.**

No letter: inside. Standard mode.

AR1: outside.

Remark: *the flame amplifier is powered externally by terminal 19 of J4.*

WIRING DIAGRAMS

The wiring diagrams below show the most complete versions of the controller. It is easy to understand which parts can be present or absent according to the different options requested.

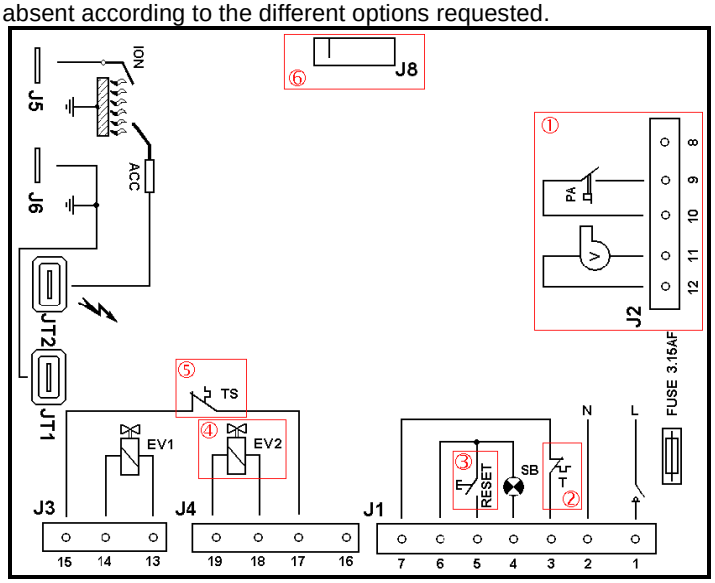

Type NDTM32 in dual electrodes mode

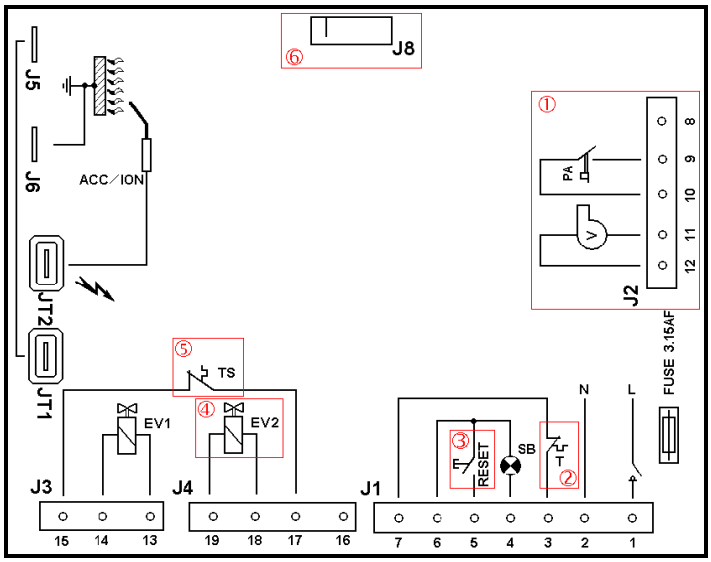

Type NDTM32 in mono-electrode mode

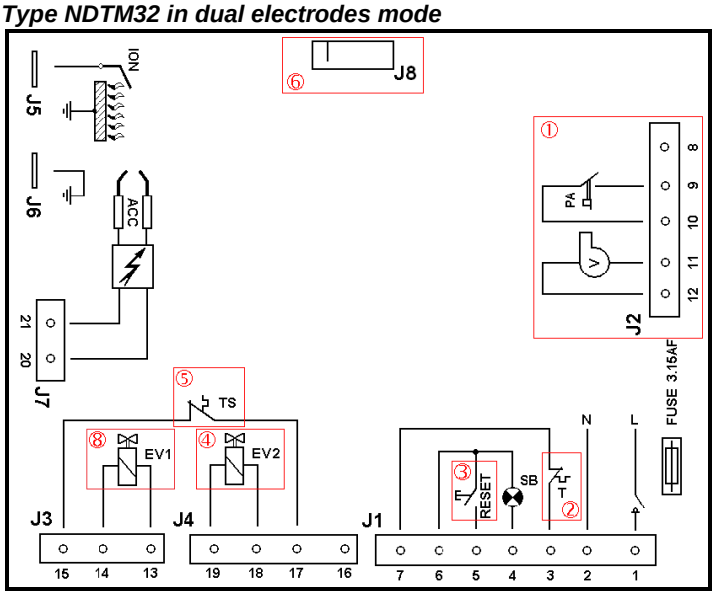

Type NDTM32PR

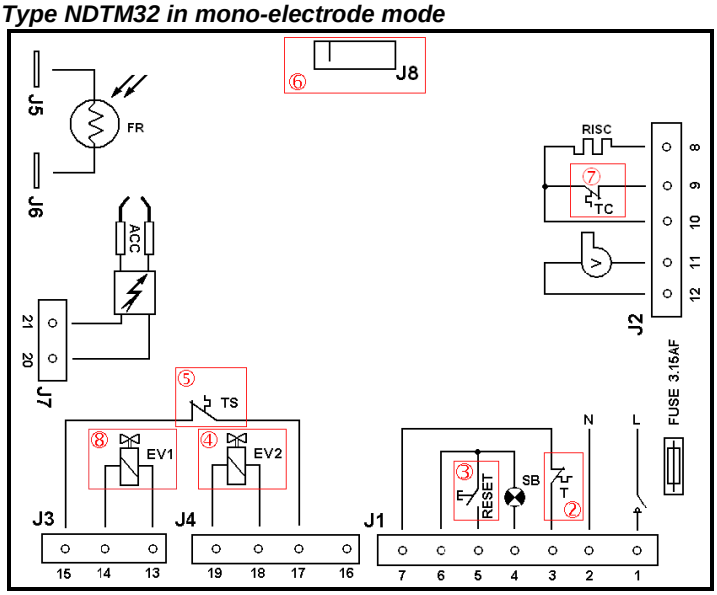

Type NDTM32O

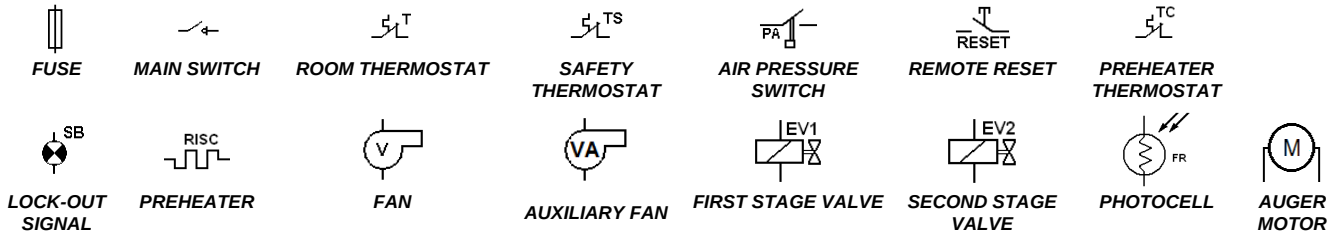

REMARKS

1) In the versions without fan motor (NDM11, NDE12,…) J2 connector is not present.
2) Controllers with option “U” connected to a BRAHMA interface with the function as a room thermostat , the thermostat T must be short-circuited.
3) Reset push button is not wired in an electrical reset device.
4) In the versions fitted with “T1” option (with auxiliary fan) the second gas valve symbol is replaced by the auxiliary fan symbol (VA). In the devices fitted with “T2” option (with NO auxiliary contact) there is not a second gas valve symbol and pin n°. 18 and 19 are represented by abbreviations “C“ (COMMON) and “NA“ (NORMAL OPEN).

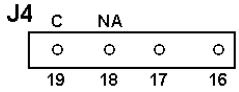

5) In the versions without safety thermostat TS, the connection is not available.
6) In the versions without option “U” (interface module BRAHMA) the connector J8 is not available.
7) In case of the preheater is absent , TC thermostat must be short circuited by means of an external bridge.
8) In case of controller for biomass appliances, the first stage valve (EV1) symbol is replaced by the auger motor symbol (M).

OPERATING CYCLES

STANDARD VERSIONS WITHOUT SAFETY THERMOSTAT

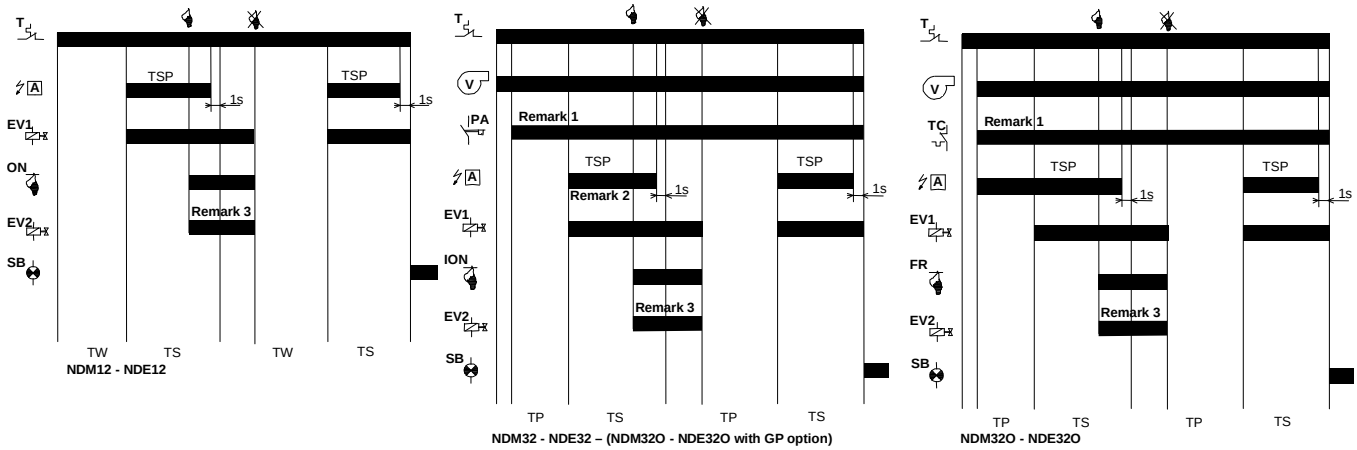

STANDARD VERSIONS WITH SAFETY THERMOSTAT

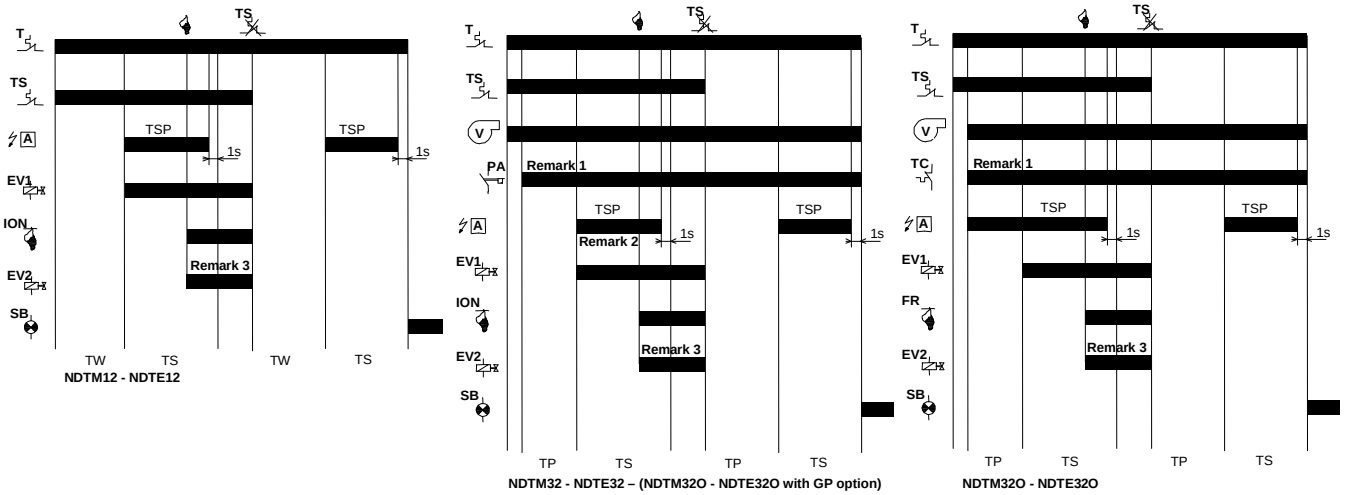

BIOMASS VERSIONS WITHOUT SAFETY THERMOSTAT

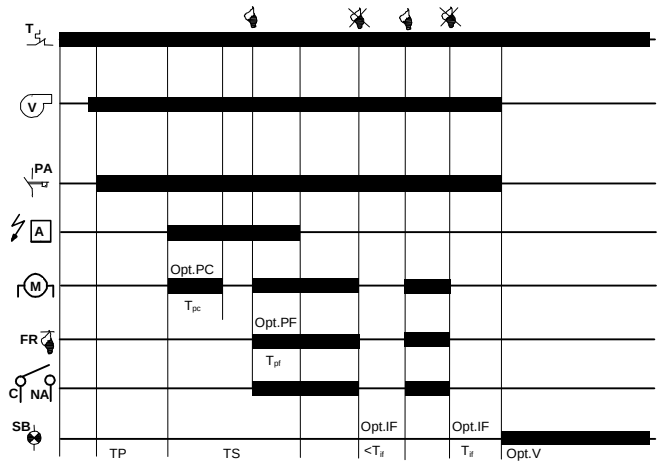

NDM31 - NDE31 - NDM31O - NDE31O

BIOMASS VERSIONS WITH SAFETY THERMOSTAT

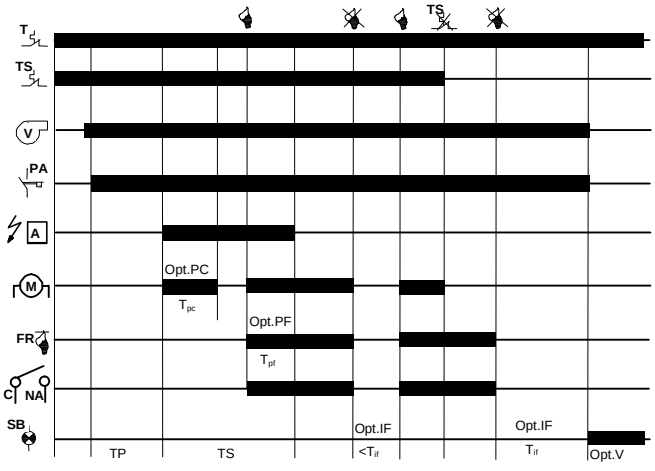

NDTM31 - NDTE31 - NDTM31O - NDTE31O

T	TS	PA	TC	ION / FR	C NA	SF2
ROOM THERMOSTAT	*SAFETY THERMOSTAT*	*AIR PRESSURE SWITCH*	*PREHEATER THERMOSTAT*	*FALME SIGNAL*	*FLAME SIGNALLIG*	*SF2 SENSOR*
SB	V	EV1	EV2	M	A	
LOCK-OUT SIGNAL	*FAN*	*FIRST STAGE VALVE*	*SECOND STAGE VALVE*	*AUGER MOTOR*	*IGNITION*	

Remark 1: in case of controller with “G” option, is not present the checking of the air pressure switch PA or the preheater thermostat TC.

Remark 2: in case of controller for oil appliances, the ignitor transformer “A” is supplied during the entire prepurge time TP.

Remark 3: the second stage (EV2) is not present in the direct ignition versions.

AVAILABLE OPTIONS

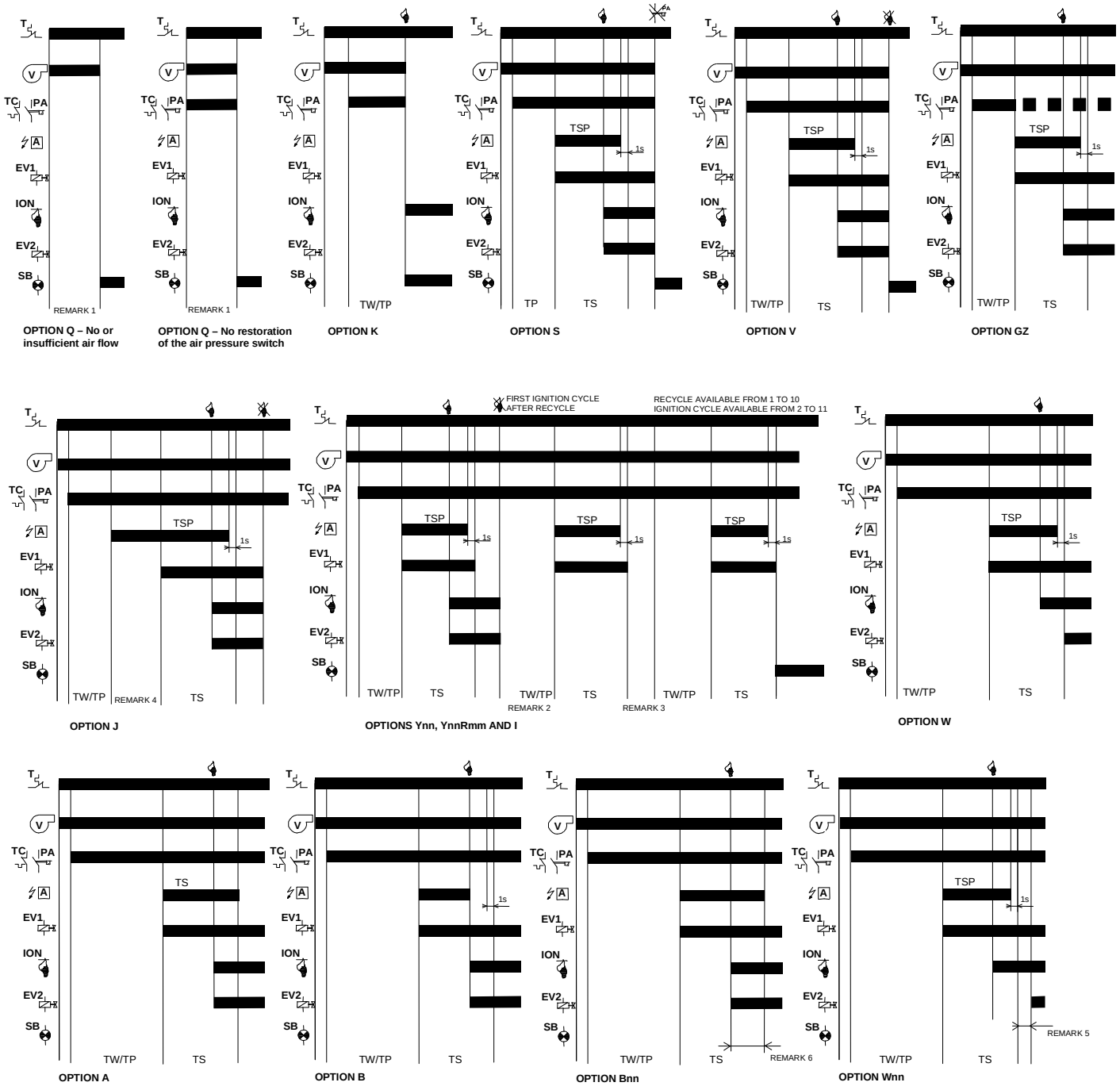

OPTION Q – No or insufficient air flow

OPTION Q – No restoration of the air pressure switch

OPTION K

OPTION S

OPTION V

OPTION GZ

OPTION J

OPTIONS Ynn, YnnRmm AND I

OPTION W

OPTION A

OPTION B

OPTION Bnn

OPTION Wnn

T	TS	PA	TC	ION / FR	CI NAI	SF2
ROOM THERMOSTAT	***SAFETY THERMOSTAT***	***AIR PRESSURE SWITCH***	***PREHEATER THERMOSTAT***	***FALME SIGNAL***	***FLAME SIGNALLIG***	***SF2 SENSOR***
SB	V	EV1	EV2	M	A	
LOCK-OUT SIGNAL	***FAN***	***FIRST STAGE VALVE***	***SECOND STAGE VALVE***	***AUGER MOTOR***	***IGNITION***	

REMARKS

1. Lock-out condition with delay available.
2. Upon failure to ignite the device allows multiple attempts to recycle with “Ynn” and “YnnRmm” option. Upon flame failure during the running condition, the device allows the restoring of attempts recycle only with “YnnRmm” option.
3. Inter-waiting or inter-purge time available. As a special setting the waiting/pre-purge time between each recycling attempt may be replaced by an inter-waiting/inter-purge time, if this sequence is allowed by final appliance.
1. Pre –ignition time available. In the oil versions the pre-ignition time and the pre-purge time are the same.
2. Second stage ignition delay time available.
3. Post–ignition time available with delay.

AVAILABLE OPTIONS

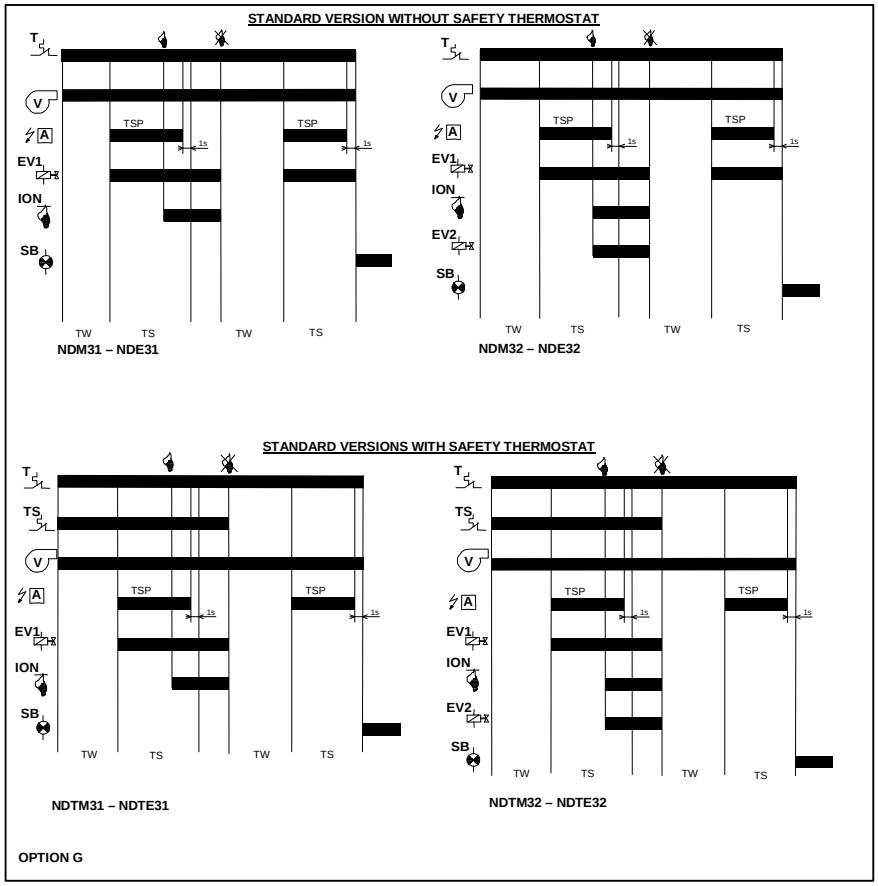

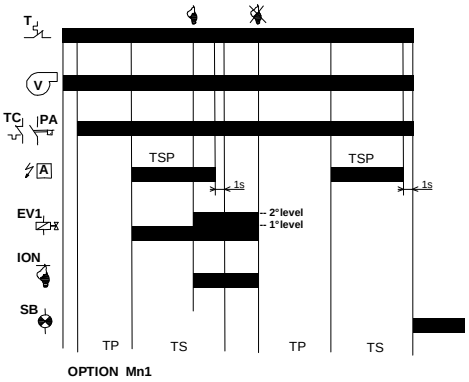

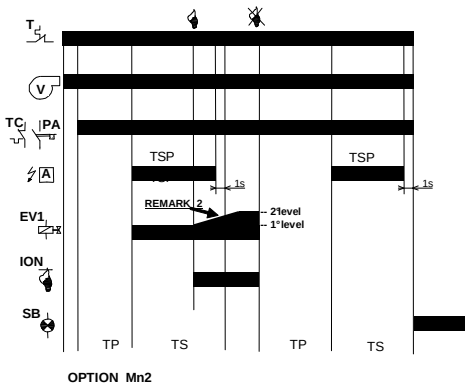

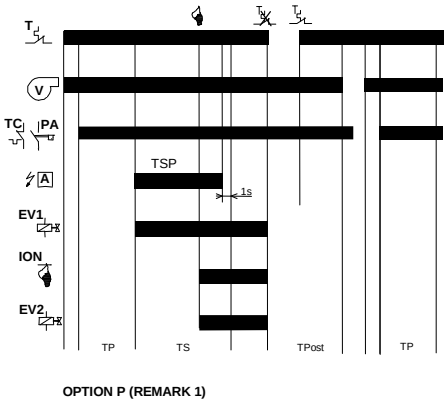

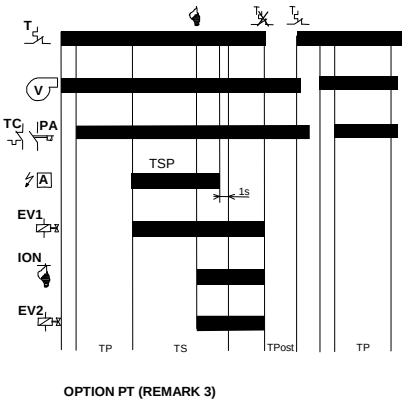

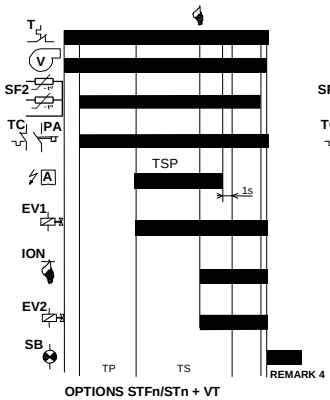

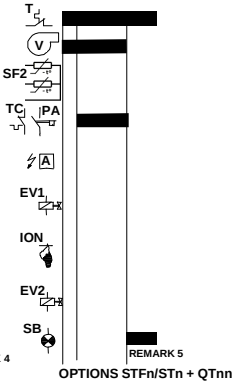

T	TS	PA	TC	ION / FR	C NA	SF2
ROOM THERMOSTAT	*SAFETY THERMOSTAT*	*AIR PRESSURE SWITCH*	*PREHEATER THERMOSTAT*	*FLAME SIGNAL*	*FLAME SIGNALLIG*	*SF2 SENSOR*
SB	V	EV1	EV2	M	A	
LOCK-OUT SIGNAL	*FAN*	*FIRST STAGE VALVE*	*SECOND STAGE VALVE*	*AUGER MOTOR*	*IGNITION*	

REMARKS

1. The same behavior occurs in case of shut-off during operation with option “Cnn” and for the auxiliary cross flow fan in case of option “Onn”.
2. The timing to pass from the first modulating level to the second one, is settable upon request.
3. The same behavior occurs in case of shut-off during operation with option “CTnn”.
4. The loss of the SF2 signal causes an immediate lockout, cycle stops without VT option.
5. The absence of SF2 signal causes a lockout with delay, cycle stops without QTnn option.

WARNING -> Company Brahma S.p.A. declines any responsibility for any damage resulting from the Customer’s interfering with the device

BRAHMA S.p.A.
Via del Pontiere, 31
37045 Legnago (VR)
Tel. +39 0442 635211 - Telefax +39 0442 25683
http://www.brahma.it
E-mail : brahma@brahma.it

13/07/2015 Subject to amendments without notice