satronic
A Honeywell Company

TMG 740-3

Burner Control Box

For high performance forced draught and dual fuel burners in intermittent operation (single or two stage versions).
Suitable flame detectors:
- Ionisation probe
- UV sensor
- Infra-red flicker detector



INTRODUCTION

The TMG 740-3 burner control box is capable of controlling and monitoring medium to high performance forced draught and dual fuel oil/gas burners in single or two stage versions. It can be used, as prefered, for multi-stage or modulating operation with burners of any nominal rating as well as in direct air heaters (as per DIN 4794).
Different model designations identify the control boxes according to programme times for varying national standards, or for special applications e.g. high-speed steam generators.
A special version is available for operation with ignition spark monitoring in conformance with French national regulations.
The TMG 740-3 is fully interchangeable with the earlier versions -1 and -2.

CONSTRUCTIONAL FEATURES

The control box is enclosed in a protective, flame resistant, transparent, plug-in type plastic housing, and includes:
- Synchronous motor with gearbox driving cam switch
- Cam switch with informative, coloured programme indicator
- 16-way cam switch assembly controlling the programme sequence
- 2 DC relays and 1 remanence relay on common yoke
- Plug-in printed circuit board with mains transformer, LED display and electronic components

On the underside of the unit are robust plug terminals where the air proving switch and monitoring of the ignition spark can be programmed via two wire links which can be cut as required. The flame detector selection switch is also situated on the the underside of the unit.

The following important indicators and operating controls can be found on the front of the control box:
- Reset button incorporating signal lamp for malfunction (lockout)
- Coloured programme indicator
- Flame signal indicator with 5 LED's
- Central screw fastening

TECHNICAL DATA

Supply voltage		220 / 240 V (-15... +10%) 50 HZ (40 - 60 Hz)
AC frequency variations		result in proportional timing
deviations		
Fuse rating		10 A rapid, 6 A slow
Power consumption		approx. 15 VA
Max. current per		
output terminal		4 A
Total		6 A
Sensitivity		
Ionisation input		1.6 µA
UV input		70 µA
Min. sensor current		
Ionisation/IR probe		5 µA = 2 LED
UV tube		250 µA = 2 LED
Air proving switch		6 A, 220 V
Reset delay		none
Flame detector cable		
	Ionisation	50 m normal cable 100 m screened cable
	UV tube	100 m normal cable 200 m screened cable
UV tube	UVZ 780 blue	low sensitivity
	UVZ 780 white	medium sensitivity
	UVZ 780 red	high sensitivity
Weight incl. base		1100 g
Mounting attitude		any
Insulation standard		IP 44
Permissable ambient temp.		-20° C to +60° C incl.
Classified acc. to EN 298		BTLLXN

Model No.	32-32 sec.	63-55 sec.	43-35 sec.	13-53* sec.
Pre-purge time supervised	24	60	32	4
Pre-purge time with air damper open	30	60	40	6
Pre-ignition time fixed	3	4	4	1
Start valve safety interval	2	3	3	3
Pilot valve safety interval	3	5	3	5
Pilot valve switch on time	11	13.5	14	8
Main valve 1 safety interval	2	5	5	3
Valve 1 delay	9	10	10	6
Valve 2 delay	6	20	10	4
Post-purge	7	16	10	-

* For high-speed steam generators. Prescribed ventilation must be verified.

ПРОМЭЛЕКТРОНИКА / sales@prom-elec.com

TECHNICAL FEATURES

1. Flame detection

The following types of flame detector can be used:
- Ionisation electrode, where the mains supply provides a neutral earth connection. Suitable for gas burners (signal current from flame cannot be influenced by interference from ignition spark).
- UV sensor type UVZ 780 red, suitable for gas, oil and dual fuel burners.
- Infra-red flicker detector type IRD 820 and 1020 for all types of burner.

The flame signal amplifier is adjusted to the the type of detector probe fitted by using the flame detector selection switch on the underside of the unit. If the IRD flicker detector is used, the selection switch must be adjusted to the "ION" position.
Flame detection is only operational when the switch position selected corresponds to the type of detector probe connected.
By optimally matching the amplifier to the detector probe, considerably longer signal transmission distances with less sensitivity to interference can be achieved.

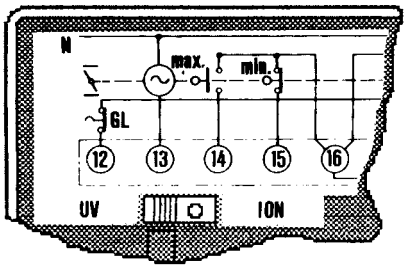

The flame signal current indicator consists of a five stage LED display which shows the signal current continuously. An indication of the strength of the flame signal current is therefore always given. Fluctuations in the monitoring sensitivity can be noticed at an early stage, and appropriate corrective action can be taken.
If the infra-red flicker detector IRD 820 or 920 is employed, the flame signal current indicator on the control box is not relevant. In this case, the IRD indicator is the decisive indication of flame signal strength.

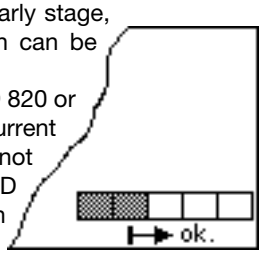

Flame signal current indicator

2. Burner Control

- Burners can be operated with or without post-purge. This varies according to model (see technical data) and is activated when the burner motor is connected to terminal 19.
- Air damper operation is monitored to ensure the nominal air volume during pre-purge and in the starting position before fuel is released. If confirmation of the damper positions "MIN" and "MAX" is not received, the control box start sequence is interrupted.
- The air proving switch is checked for corrrect operation before the start, and air pressure is monitored during pre-purge as well as during normal operation. In normal use, switch contacts with a rating of 6A/220V are sufficient. Additional switch contacts which are to be monitored can be connected between terminal 18 and the air proving switch working contact. In this case, jumper II on the underside of the control box should be cut.
- A separate connection for a pilot valve PV is provided, which is again closed at the end of the second safety interval. The heat output of the gas flow which is controlled by this valve must not exceed 120kW.
- The terminal for the start valve SV must not be used when connecting the pilot valve PV.
- Together with the start valve SV, a total of 3 power levels are available for use. The gas flow controlled by valves SV, V1 and V2 must lead to a common nozzle unit.
- To determin the heating power of the gas flow controlled by the pilot- and start valve, EN 676 has to be consulted.
- In addition to the built-in button with signal lamp, it is also possible to connect a remote lockout indicator and reset switch.
- For monitoring of the ignition spark, link 1 on the base of the control box must be cut. In this case, flame detection is carried out by a UVZ 780 ultra-violet sensor.

3. Safety

The design and programme sequence employed in the control boxes in the TMG 740-3 series conform to the presently applicable European standards and regulations. The following features exceed the requirements of most standards, and therefore ensure additional safety:
- After a normal shutdown, the stray light test is started immediatly by the control box which directs an increased voltage to the UV sensor. The very important extinguishing function of the sensor can therefore be checked. If the fuel valve does not close correctly, or a sensor or amplifier malfunction occurs, shutdown and lockout take place after approx. 20 sec., even if the controlling thermostat is open.
- The contacts responsible for the release of fuel are checked when the programme starts, to ensure that they have not become welded together.

4. Mounting and Electrical Installation

At the base:
- 3 earth terminals, with an additional tag for the burner earth.
- 3 neutral terminals, with a fixed internal through connection to the neutral input, terminal 8.
- 2 separate slide-in plates and 4 fixed, threaded knockouts (PG 11 thread) as well as a wiring opening from below, to facilitate wiring of the base.
- A keyed fit ensures that the wrong control box type cannot be fitted to the base. The corresponding control box designation is shown in lettering on the base.

General:
- Can be mounted in any position, insulated as per IP 44 standard (unaffected by water spray). The control box and detector probes should not however be subjected to excessive vibration. With the UVZ 780 ultra-violet sensor, care should be taken to ensure that a good electrical contact to the burner exists via the metal flange.
- If an ionisation electrode is used, appropriate protective measures are required in order to avoid contact with the electrode while installation work is being carried out. Trouble-free operation with this type of flame detection is not possible if a voltage of over 25 volts is measured between neutral and earth. In this case, provision must be made for a separate isolating transformer.
- The maximum lengths for the detector probe cables, depending on the type of cable installed, are listed in the technical data and must be adhered to without fail. Laying the cables parallel to mains cabling over long distances should be avoided, and the use of multiple core cable is also not permitted.

WIRING DIAGRAMS

IRD CONNECTION

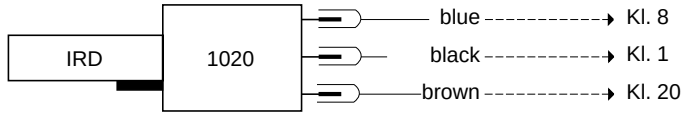

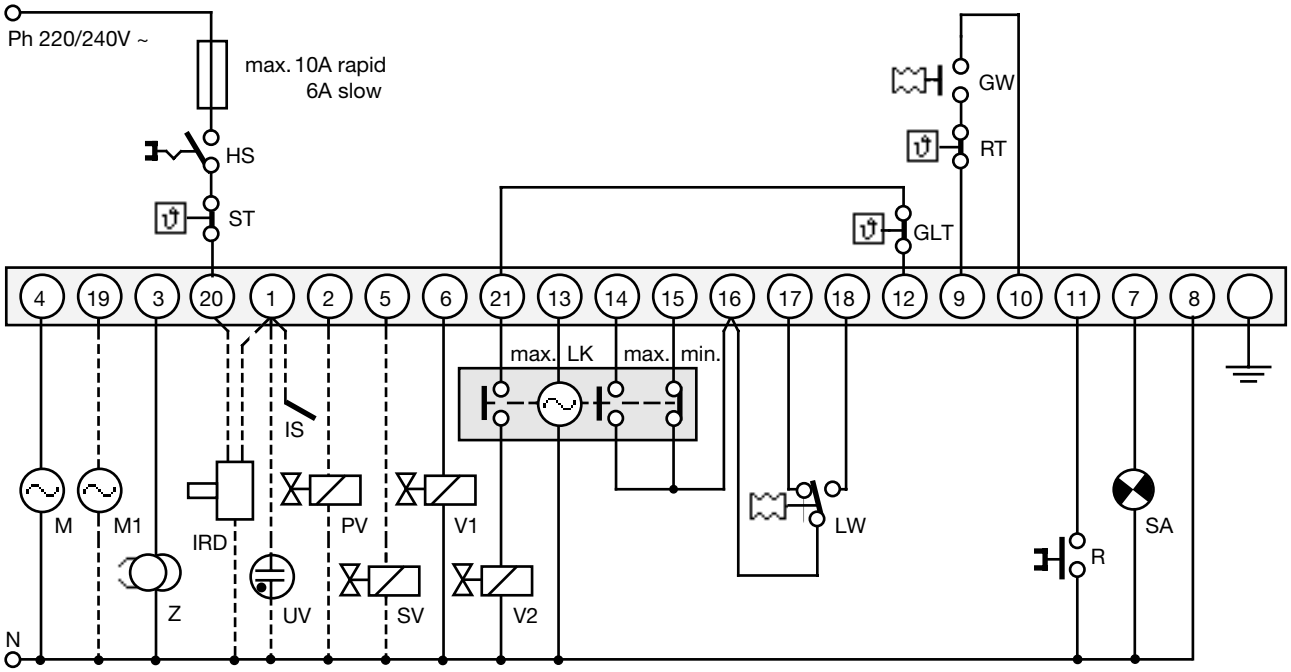

HS	Mains switch
ST	Limit thermostat
GW	Gas Pressure proving switch
RT	Control thermostat
GLT	High/low operation thermostat
M	Burner motor
M1	Burner motor for post-purge
Z	Ignition transformer
IRD	Infra-red flicker detector
UV	UV-cell
IS	Flame ionisation probe
PV	Pilot flame gas valve
SV	Start flame gas valve
V1	Main flame gas valve
V2	High flame or modulation stage gas valve
LK	Air damper motor or actuator
LW	Air pressure proving switch
R	Remote reset switch
SA	External lockout signal lamp

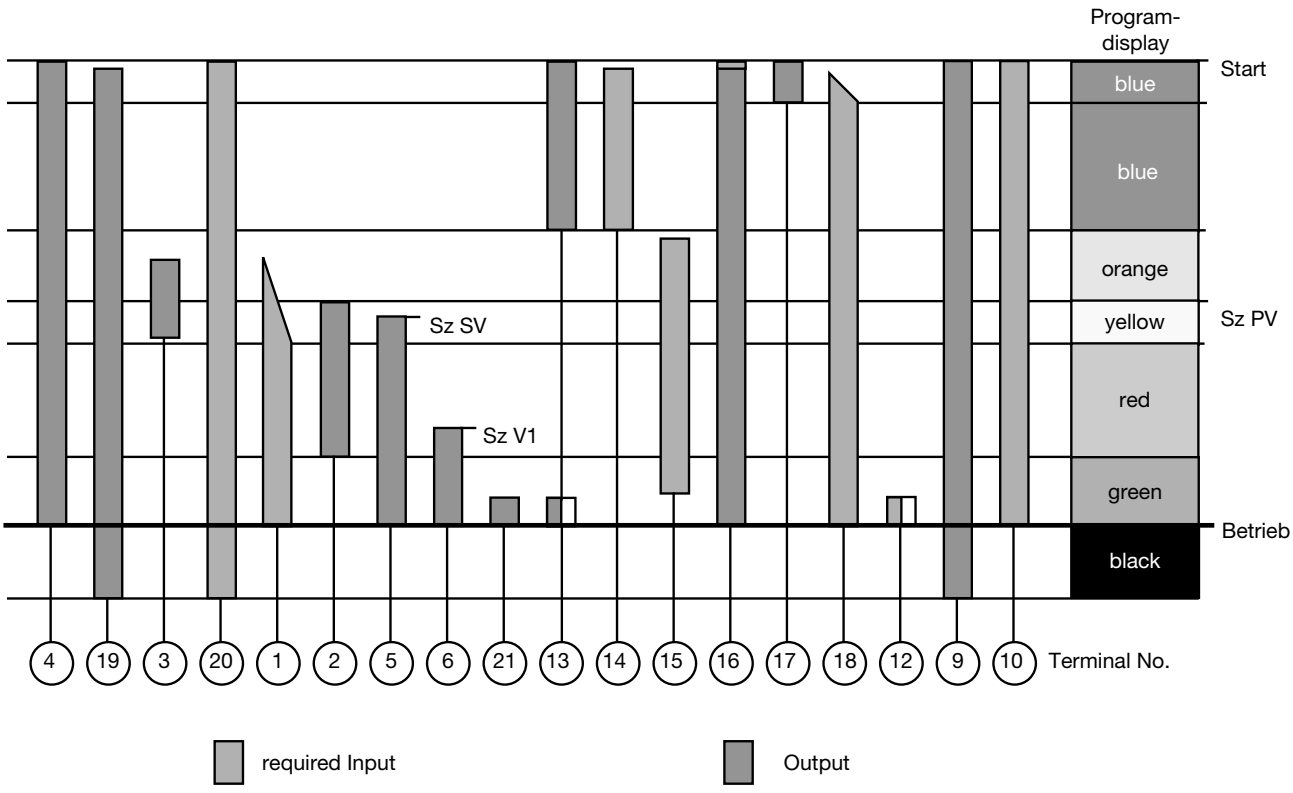

TMG 740-3

COMMISSIONING AND MAINTENANCE

1. Important

The wiring must be checked exactly when commissioning the installation. Incorrect wiring could damage the control box, putting the safety of the burner system at risk.
When mounting and wiring the control box, the applicable installation regulations must be observed.

- The chosen fuse rating must not, on any account, be higher than the value listed in the technical data.
- Failure to observe this instruction could, in the case of a short circuit, have serious consequences for the control box or burner system.
- For safety reasons, it must be ensured that the control box performs at least one normal shutdown during every 24 hour period.
- Switch off or disconnect the power before plugging in or unplugging the unit.
- Burner control boxes are safety devices and should not be opened.

2. Routine Checks

An inspection of the technical safety of the flame detection system must be carried out during commissioning of the unit as well as after servicing, or if the system has not been in operation over a long period.

For test a), the gas proving switch should be bridged.

a) Attempt to start with the hand valve closed:
   - After the first safety interval has elapsed
   -> Lockout
b) During normal operation, interrupt detector probe or cut off light:
   - In less than 1 sec.
   -> Lockout

Fault finding

Fault finding is considerably simplfied by making use of the coloured programme indicator. Irregularities during commissioning, normal operation or a normal shutdown pause can be localised via the programme indicator disc. If a malfunction occurs, it is useful to note the exact position of the indicator before operating the control switch or reset button.

The following list is designed to assist with fault finding.

COLOUR	WHERE	WHAT	REASON
BLUE	beginning	doesn't start	- no power, break in control circuit, air proving switch not in resting position
		continuous ventilation	- end switch "MAX" air damper doesn't operate
	line	lockout	- air proving switch doesn't switch over or is too late
	end	continuous ventilation	- end switch "ignition position", air damper doesn't operate
	anywhere	lockout	- stray light
YELLOW	end	lockout	- flame establishment pilot or start valve impossible no flame signal current or too weak (min. 2 LED's) flame detector selector switch set incorrectly
RED	end	lockout	- no flame signal current or too weak after end of second safety interval (double fuel feed burner)
GREEN	end	lockout	- loss of flame during operation, air pressure too low
BLACK	end	lockout	- stray light due to burning on, UVZ sensor tube reached end of life and activates shutoff, defect in flame detector circuit

A test baseplate is available for checking the burner control box functions (model designation UP 7520, item no. 18601)

BURNER 1- OR 2-STAGE

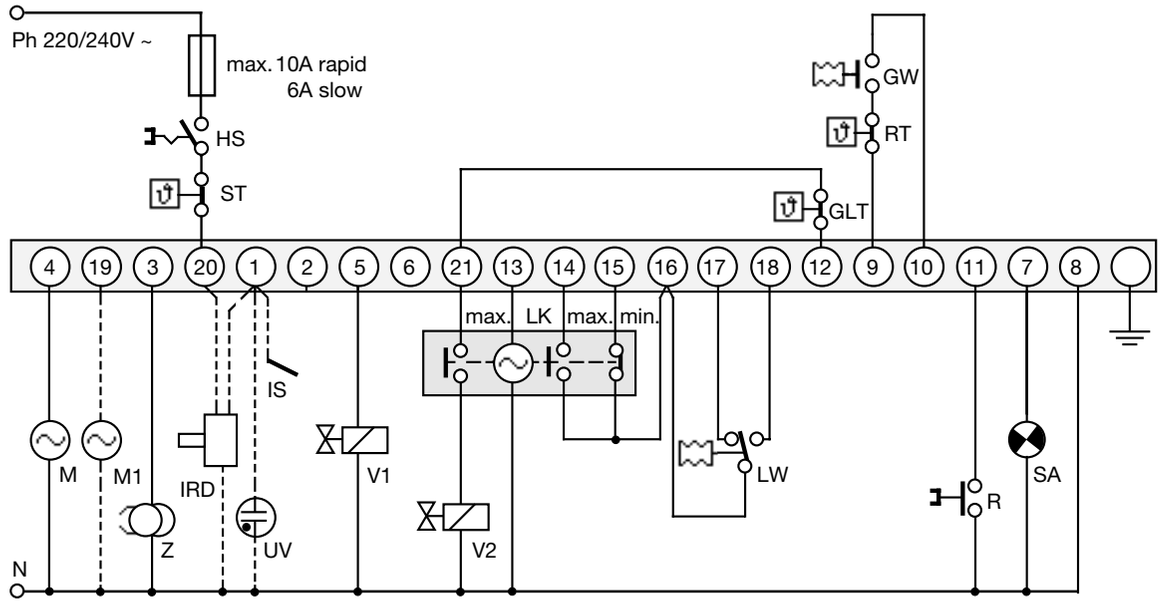

BURNER WITH START-VALVE

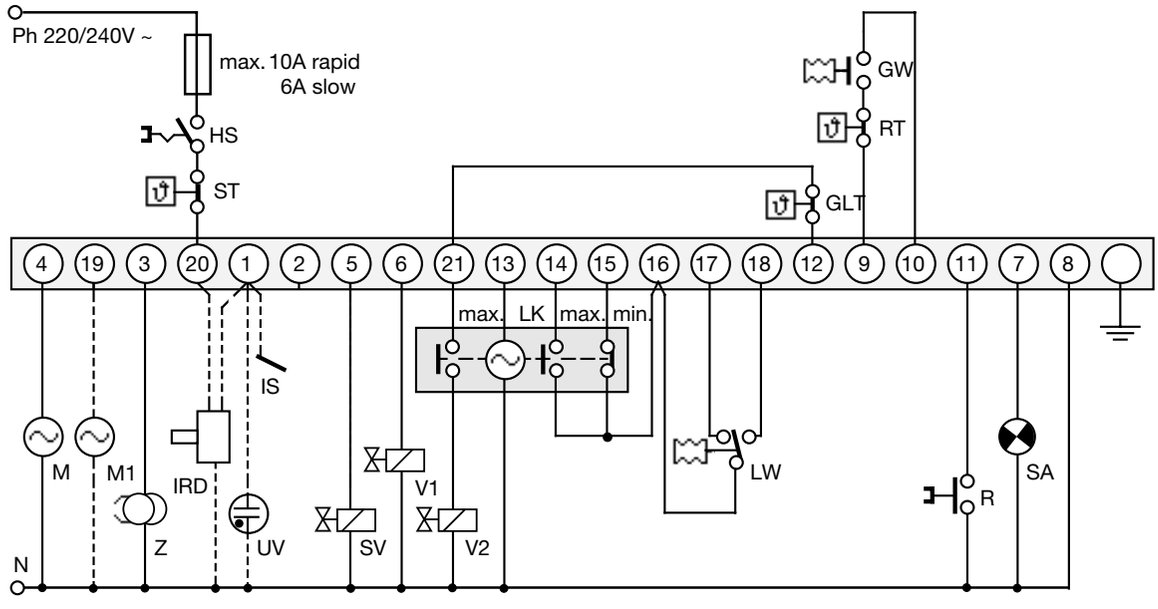

2 NOZZLE BURNER

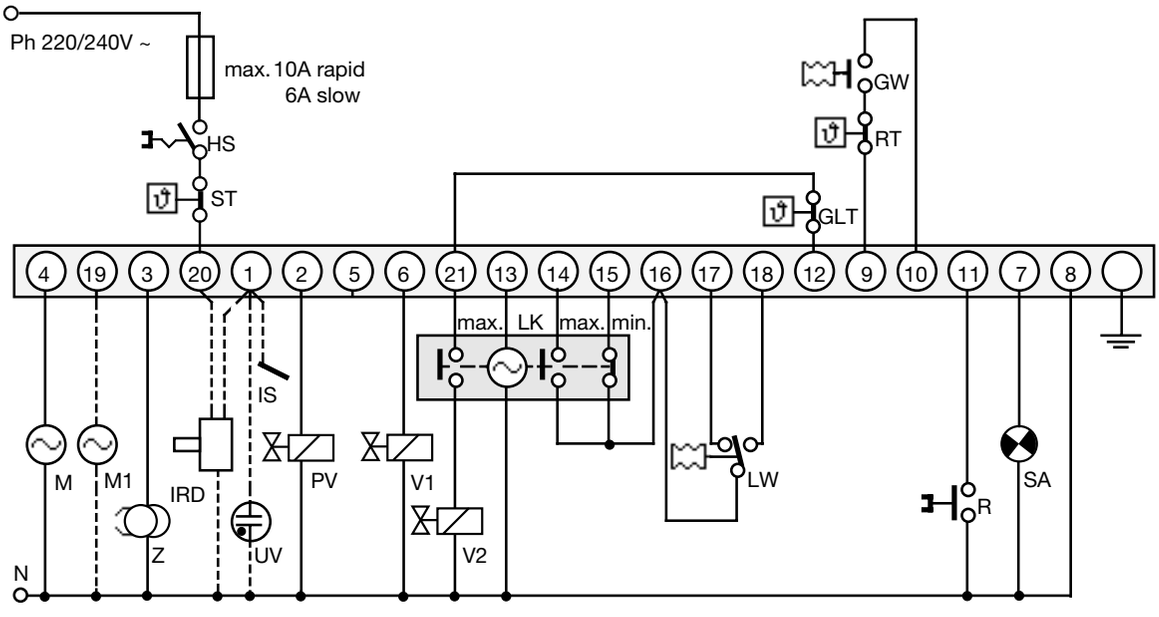

TMG 740-3

honeyvell.energy

ПРОМЭЛЕКТРОНИКА / sales@prom-elec.com

SCHEMATIC DIAGRAMM

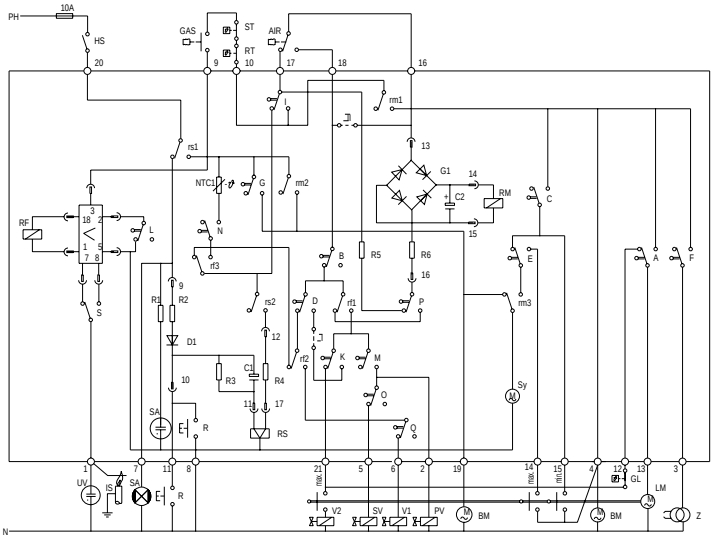

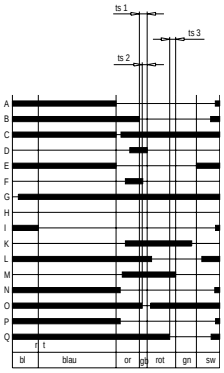

ts1 = Pilot valve safety interval
ts2 = Start valve safety interval
ts3 = Main valve 1 safety interval

I = cut for monitoring of the iguition spork
II = cut for additional switch contacts

TMG 740-3 WITH SOCKET

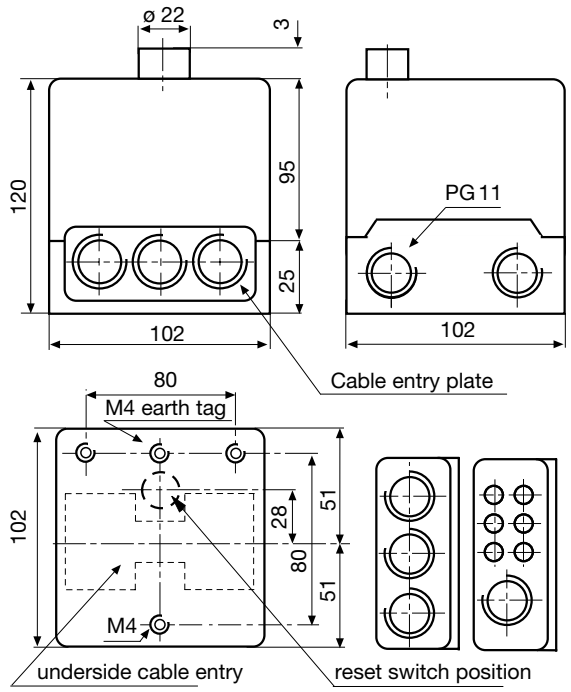

UVZ 780 WITH SUPPORT

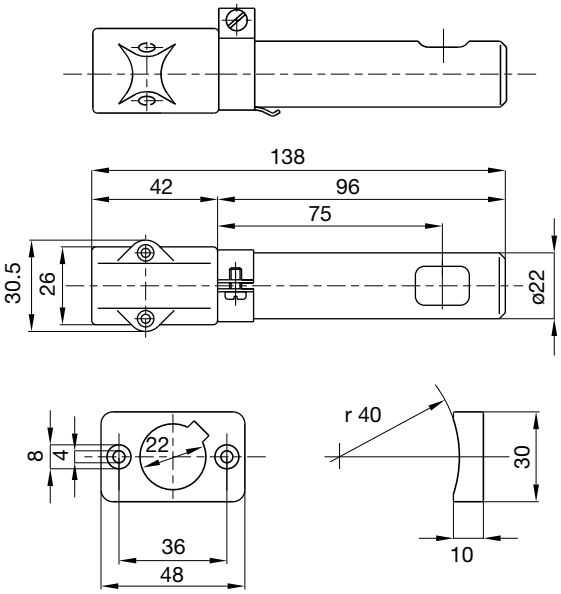

ORDERING INFORMATION

ITEM	DESIGNATION	ITEM NO.
Burner control box	Type TMG 740-3 Mod. 32-32	08211
Socket	Socket TMG	70205
Insert plate	PG-plate	70502
optional	Cable entry plate	70501
Flame detector	UVZ 780 white	18814
or	UVZ 780 blue	18812
or	UVZ 780 red	18813
Flame detector	IRD 820	16201
Flame detector	IRD 1020 end-on viewing	16522
Flame detector	IRD 1020 side-on left	16523
Flame detector	IRD 1020 side-on right	16521
IRD mounting flange	IRD Holder M93	59093
Flame detector cable	3-wire, 0.6 m	7236001

The above ordering information refers to the standard version.
Special versions are also included in our product range.

Specifications subject to change without notice.