SIEMENS

7451



Burner Controls LFL1...

Burner controls

- **For gas, oil or dual-fuel forced draft burners of medium to high capacity**
- **For multistage or modulating burners in intermittent operation**
- **With checked air damper control**
- **Flame supervision with QRA2/QRA4/QRA10 UV flame detector and ionization probe**

The LFL1 and this Data Sheet are intended for use by OEMs which integrate the burner controls in their products!

Use

- Control and supervision of forced draft burners of direct spark flame or interrupted pilot construction
- For burners with medium to high load
- For intermittent operation (at least one controlled shutdown every 24 hours)
- For universal use with multistage or modulating burners
- For use with stationary air heaters (WLE)
- For use with dual-fuel burners
- Type-tested and approved in accordance with DIN EN 298

The flame supervision is ensured via a QRA2/QRA4/QRA10 UV flame detector or ionization probe. The difference between 01 series and 02 series is the duration of the safety time for the pilot burner of burners equipped with pilot gas valves. For atmospheric burners of high capacity, use the LFL1.638.

ПРОМЭЛЕКТРОНИКА / sales@prom-elec.com

Supplementary documentation

Product type	Type of documentation	Documentation number
LGK16 (burner controls for continuous operation)	Data Sheet	N7785

Disclaimer

Please note that this translation may not fully reflect all linguistic nuances, technical terminology, or cultural context of the original text. Although it has been prepared with due care, variations in content or interpretation cannot be entirely excluded. This translation is provided for general informational purposes only and shall **not** be regarded as legally binding or as the final version. For any official or legally binding matters, reference should always be made to the **original version** in German.

Warning notes



To avoid injury to persons, damage to property or the environment, the following warning notes must be observed!

Do not open, interfere with or modify the unit!

- All activities (mounting, installation and service work, etc.) must be performed by qualified staff
- Before making any wiring changes in the connection area, completely isolate the plant from mains supply (all-polar disconnection). Ensure that the plant cannot be inadvertently switched on again and that it is indeed dead. If not observed, there is a risk of electric shock hazard
- Ensure protection against electric shock hazard by providing adequate protection for the burner control's connection terminals
- Each time work has been carried out (mounting, installation, service work, etc.), check to ensure that wiring is in an orderly state and make the safety checks as described in «Commissioning notes»
- Press the lockout reset button only manually (apply a force of no more than 10 N), without using any tools or pointed objects
- Do not press the lockout reset button on the unit or the remote lockout reset button (input 21) for more than 10 seconds since this damages the lockout relay in the unit
- Fall or shock can adversely affect the safety functions. Such units must not be put into operation, even if they do not exhibit any damage
- For safety reasons – self-test of the flame supervision circuit, etc. – at least one controlled shutdown must take place every 24 hours
- In the case of flame supervision with a QRA2/QRA4/QRA10 UV flame detector, it should be noted that sources of radiation such as halogen lamps, welding equipment, special lamps, ignition sparks, as well as X-rays and gamma radiation, can produce erroneous flame signals

Mounting notes

- Ensure that the relevant national safety regulations are complied with
- Connect the earthing lug inside the terminal base to burner ground using a screw with a lockwasher
- **An ignited UV tube is a source of UV radiation!** In case of flame supervision by means of flame detectors, the detectors must be placed such that there is **no direct visual contact** between them. If this is not observed, there is a risk of loss of safety functions

Installation notes

- Always run the high-voltage ignition cables separately while observing the greatest possible distance to the unit and to other cables
- Do not mix up live and neutral conductors
- Install switches, fuses and grounding in accordance with local regulations
- Risk of damage to the switching contacts!
  If the external primary fuse (Si) is blown due to overload or short-circuit at the terminals, the LFL1 must be replaced
- Do not exceed the maximum permissible current rating of the connection terminals
- The insulation of internal wiring which is subjected to the mains voltage must be able to withstand the electrical loads occurring during proper use

Application notes

☞ For use in applications in dual-fuel burners or oil burners, the oil supply must be equipped with two shutoff valves connected in series.

Observe the following:
EN 298, chapter 7.101.3.3 ‘Prepurge time for oil burner control systems and the corresponding application standards’.

Electrical connection of flame detectors

It is important to achieve practically disturbance- and loss-free signal transmission:

- Never run the detector cable together with other cables
  – Line capacitance reduces the magnitude of the flame signal
  – Use a separate cable
- Observe the permissible detector cable lengths; refer to chapter ‘Technical data’
- Two QRA2/QRA4/QRA10 UV flame detectors can be connected in parallel (observe the warning note)
- Terminal 22 must be connected to earth in connection with QRA2/QRA4/QRA10 UV flame detectors
- The ionization probe is not protected against electric shock hazard
- Locate the ignition electrode and the ionization probe so that the ignition spark cannot arc over to the ionization probe (risk of electrical overloads) and that the ignition sparks cannot adversely affect the supervision of ionization
- Supervision using an ionization probe and a QRA2/QRA4/QRA10 UV flame detector is possible; however, for safety-related reasons, both flame detectors must not be active at the same time, except during the second safety time (t9). At the end of the second safety time, 1 of the detectors must be inactive, however, that is, the detected flame must have extinguished, e.g. by switching off the ignition valve via terminal 17

Commissioning notes

When commissioning the plant or when doing maintenance work, make the following safety checks:

	Safety check to be carried out	Anticipated response
a)	Burner start with flame detector darkened	Lockout at the end of «TSA»
b)	Burner start with flame detector exposed to extraneous light	Lockout after no more than 40 seconds
c)	Burner operation with simulated loss of flame; for that purpose, darken the flame detector in operation and maintain that state (not possible with ionization)	Lockout
d)	Burner startup with response from air pressure switch interruption	Start prevention / lockout during the prepurge time
e)	Burner operation with air pressure failure simulation	Immediate lockout

- Install switches, fuses, earthing, etc., in compliance with local regulations
- Risk of damage to the switching contacts!
  If the external primary fuse (Si) is blown due to overload or short-circuit at the terminals, the LFL1 must be replaced
- Decisive for the connection of the valves and other plant components is the plant diagram provided by the burner manufacturer

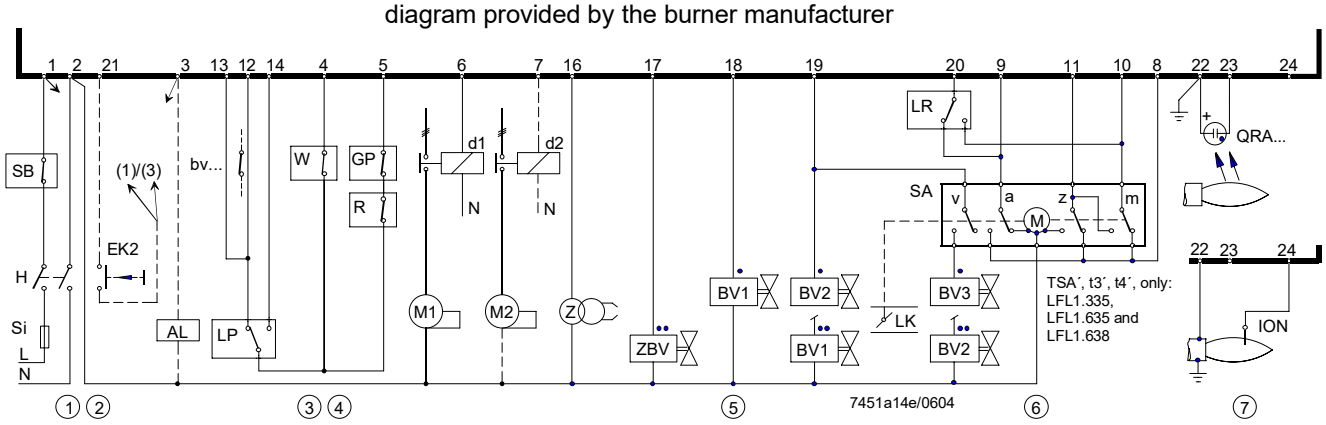

①	Connect safety limit thermostat in the line (manual reset, e.g. «SB»)
②	Remote reset When remote reset button «EK2» is connected between terminal 21 and - terminal 3, only remote reset is possible - terminal 1, both remote emergency shutdown and remote reset are possible
③	Required switching capacity • of switching units between terminals 12 and 4 (refer to chapter ‘Technical data’) • of switching units between terminals 4 and 14 (refer to chapter ‘Technical data’) depending on the load at terminals 16 to 19 (refer to chapter ‘Technical data’)
④	Air pressure supervision If the air pressure is not monitored with air pressure switch «LP», terminal 4 must be connected to terminal 12, and terminal 6 to terminal 14. Terminal 13 is not used. Control contacts of the other devices in the burner installation – if series-connected – are to be connected as follows: - To terminal 4 or 5 → contacts which must be closed from startup to controlled shutdown → otherwise no start or shutdown - To terminal 12 → contacts which must only be closed on startup → otherwise no start - To terminal 14 → contacts which must be closed at the beginning of the preignition time at the latest, and which must stay closed until controlled shutdown occurs
☞	For use in oil applications, the oil supply must be equipped with two shutoff valves connected in series. Observe the following: EN 298, chapter 7.101.3.3 ‘Prepurge time for oil burner control systems and the corresponding application standards’.
⑤	• Connection of fuel valves with direct spark flame burners. With 2-stage burners, «BV2» is connected in place of «BV3» •• Connection of fuel valves with interrupted pilot burners Direct connection of a fuel valve to terminal 20 is only permitted - in plants with a main shutoff valve (safety valve) on the mains side controlled by terminal 18 or 19, and - when using 2-stage fuel valves, provided that they close fully when the first stage, controlled by terminal 18 or 19, is switched off
⑥	For additional examples of air damper control, refer to chapter ‘Connection examples’. In the case of actuators with no end switch «z» for the fully CLOSED position of the air damper, terminal 11 must be connected to terminal 10 → otherwise no burner start.
⑦	Simultaneous use of ionization and UV supervision is possible. For details on the permissible length of detector cables and how they are to be run, refer to chapter ‘Flame supervision’

Standards and certificates

Applied directives:

- Low-voltage directive 2014/35/EC
- Directive for gas-fired appliances 2009/142/EC
- Gas Appliances Regulation (EU) 2016/426
- Electromagnetic compatibility EMC (immunity) *) 2014/30/EC

*) The compliance with EMC emission requirements must be checked after the burner control is installed in equipment

Compliance with the regulations of the applied directives is verified by the adherence to the following standards / regulations:

- Automatic burner control systems for burners and appliances burning gaseous or liquid fuels DIN EN 298
- Safety and control devices for gas burners and gas burning appliances DIN EN 13611
- Automatic electrical controls for household and similar use Part 2-5: Particular requirements for automatic electrical burner control systems DIN EN 60730-2-5

The relevant valid edition of the standards can be found in the declaration of conformity!

Note on **DIN EN 60335-2-102**
Household and similar electrical appliances – Safety
Part 2-102: Particular requirements for gas, oil and solid-fuel burning appliances having electrical connections.
The electrical connections of the LFL1 and the AGM plug-in base comply with the requirements of EN 60335-2-102.

EAC Conformity mark (Eurasian Conformity mark)

UKCA conformity mark (UK compliance)

China RoHS
Hazardous substances table:
http://www.siemens.com/download?A6V10883536

Certified complete with plug-in base and flame detector:

Type								
LFL1.122	●	---	●	●	●	●	●	●
LFL1.133	●	---	●	●	---	●	---	●
LFL1.322	●	---	●	●	●	●	●	●
LFL1.333	●	---	●	●	●	●	---	●
LFL1.335	●	●	●	●	●	●	●	●
LFL1.622	●	---	●	●	●	●	●	●
LFL1.635	●	---	●	●	●	●	●	●
LFL1.638	---	---	●	---	---	●	---	●

Life cycle

The LFL1 burner control has a designed lifetime* of 250,000 burner startup cycles which, under normal operating conditions in heating mode, corresponds to approx. 10 years of service (starting from the date of manufacture on the type label).

This lifetime is based on the endurance tests in the standard EN 298. A summary of the conditions has been published by the European Control Manufacturers Association (Afecor) (www.afecor.org).

The designed lifetime is based on use of the LFL1 burner control according to the data sheet. After reaching the designed lifetime in terms of the number of burner cycles, or after the corresponding usage time, the LFL1 burner control must be replaced by authorized personnel.

* The designed lifetime is not the warranty time specified in the Terms of Delivery

Disposal notes

The LFL1 contains electrical and electronic components and must not be disposed of together with domestic waste. Local and currently valid legislation must be observed.

Mechanical design

LFL1

- Plug-in design
- Exchangeable unit fuse (including spare fuse)

Housing

- Made of impact-proof and heat-resistant black plastic
- Lockout reset button with viewing window showing
  – the fault signal lamp
  – the lockout indicator
  - coupled to the program spindle
  - visible in the transparent lockout reset button
  -uses easy-to-remember symbols to indicate the type of fault and the time it occurred

Type summary

The type references apply to the LFL1 without an AGM plug-in base or flame detector. For ordering information for the AGM plug-in base and other accessories, refer to chapter 'Accessories'. Switching times are given in seconds, in the burner startup sequence, valid for 50 Hz mains frequency. At 60 Hz, switching times are about 17 % shorter.

The type references apply to burner controls operating on AC 230 V, 50...60 Hz.

	Flash steam generators	**Flash steam generators**	**Incl. stationary air heaters**				**²)**	**Large atmospheric burners**
Type	LFL1.122 ¹) 02 series	LFL1.133 ¹) 02 series	LFL1.322 ¹) 02 series	LFL1.333 ¹) 02 series	LFL1.335 ¹) 01 series	LFL1.622 ¹) 02 series	LFL1.635 ¹) 01 series	LFL1.638 01 series
Article no.	BPZ:LFL1.122	BPZ:LFL1.133	BPZ:LFL1.322	BPZ:LFL1.333	BPZ:LFL1.335	BPZ:LFL1.622	BPZ:LFL1.635	BPZ:LFL1.638
Times in seconds (s)								
t1	10	9	36	31	37	65	66	66
TSA	2	3	2	3	2.5	2	2.5	2.5
TSA´	2	3	2	3	5	2	5	5
t3	4	3	4	6	5	4	5	5
t3´	4	---	4	6	2.5	4	2.5	2.5
t4	6	6	10	11.5	12.5	10	12.5	12.5
t4´	6	---	10	11.5	15	10	15	15
t5	4	3	10	11.5	12.5	10	12.5	12.5
t6	10	14.5	12	18	15	12	15	15
t7	2	3	2	3	2.5	2	2.5	2.5
t8	30	29	65	69	74	95	103	103
t9	2	3	2	3	5	2	5	7.5
t10	6	6	8	11.5	10	8	10	10
t11	Depending on the running time of the actuator used							
t12	Depending on the running time of the actuator used							
t13	10	14.5	12	17	15	12	15	15
t16	4	3	4	6	5	4	5	5
t20	32	60	---	26	22	---	---	---

¹) Available as AC 100...110 V versions; add type suffix «-110 V» when ordering
²) Reversed polarity protection conforming to Dutch installation standard: AGM30

Legend of times

TSA	Ignition safety time
TSA'	Ignition safety time or first safety time (startup with burners using pilot burners)
t1	Prepurge time with air damper open
t3	Preignition time
t3'	Preignition time (long)
t4	Interval between voltage at terminals 18 and 19
t4'	Interval between start of TSA' and release of fuel valve at terminal 19
t5	Interval between voltage at terminal 19 and terminal 20
t6	Postpurge time (with «M2»)
t7	Interval between start command and voltage at terminal 7 (start delay for fan motor (M2))
t8	Duration of startup sequence (without «t11» and «t12»)
t9	Second safety time with burners using pilot burners
t10	Interval from start to the beginning of the air pressure check, excluding running time of air damper
t11	Air damper running time to the OPEN position
t12	Air damper running time to the low-fire position MIN
t13	Permissible afterburn time
t16	Interval until OPEN command for the air damper is given
t20	Interval to the self-shutdown of the sequence switch after startup

Accessories (to be ordered separately)

Flame detectors

UV flame detectors **QRA2**
See Data Sheet N7712.



UV flame detector **QRA4**
See Data Sheet N7711.



UV flame detector **QRA10**
See Data Sheet N7712.



Ionization probe
to be supplied by thirds.



Connection accessories for medium-capacity burner controls

Plug-in base **AGM410490550** with Pg11 thread for cable entry glands.
Article no.: **BPZ:AGM410490550**
See Data Sheet N7230.



Plug-in base **AGM14.1** with M16 thread for cable entry glands.
Article no.: **BPZ:AGM14.1**
See Data Sheet N7230.

Others

Reversed polarity protection AGM30 for Netherlands
Article no.: **BPZ:AGM30**



Accessories (to be ordered separately)

Actuators

Actuator **SQN72**
See Data Sheet N7802.



Actuator **SQN70 / SQN71 / SQN74 / SQN75**
See Data Sheet N7804.



Actuator **SQN9**
See Data Sheet N7806.

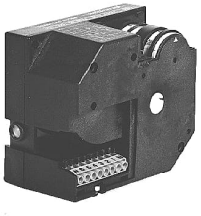

Actuator **SQM40 / SQM41**
See Data Sheet N7817.



Actuator **SQM5**
See Data Sheet N7815.



Technical data

General unit data LFL1	Mains voltage	AC 230 V –15 / +10 % AC 100 V –15%...AC 110 V +10%
	Mains frequency	50...60 Hz ±6 %
	Unit fuse (built-in)	T6.3H250V to DIN EN 60 127
	Primary fuse (Si) (external)	max. 10 A (slow)



Caution!
Risk of damage to the switching contacts!
If the external primary fuse (Si) is blown due to overload or short-circuit at the terminals, the LFL1 must be replaced.

Weight	approx. 1,000 g
Power consumption	approx. AC 3.5 VA
Mounting position	optional
Degree of protection	IP 40, when built in, with the exception of the connection area (terminal base)
Safety class	II
Perm. input current at terminal 1	max. 5 A continuously (peaks 20 A / 20 ms)
Perm. load on control terminals 3, 6, 7, 9...11, 15...20	max. 4 A continuously (peaks 20 A / 20 ms)
Required switching capacity of switching devices	
- Between terminals 4 and 5	1 A, AC 250 V
- Between terminals 4 and 12	1 A, AC 250 V
- Between terminals 4 and 14	min. 1 A, AC 250 V depending on the load on terminals 16...19
Permissible length of the standard detector cable (laid separately)	See *Technical Data*, chapter *Flame supervision*
Capacity	
- Output on startup (without fan assistance)	Optional (with ignition <120 kW)
- Nominal output	Optional

Environmental conditions	**Storage**	
	Temperature range	-20...+60 °C
	Humidity	< 95 % r.h.
	Transport	
	Temperature range	-20...+60 °C
	Humidity	< 95 % r.h.
	Operation	
	Temperature range	-20...+60 °C
	Humidity	< 95 % r.h.
	Installation altitude	Max. 2,000 m above sea level



Warning!
Condensation, formation of ice and ingress of water are not permitted!
If not observed, there is a risk of impairment of safety functions and of electric shock hazard.

Flame supervision with ionization probe

Voltage at the ionization probe	
- Operation	AC 330 V ±10 %
- Test	AC 380 V ±10 %
Short-circuit current	max. 0.5 mA
Recommended range of measuring instrument	0...50 µA
Perm. length of detector cable	
- Normal cable, laid separately (multicore cable not permitted)	max. 80 m
- Shielded cable	max. 140 m (e.g. high-frequency cable; shielding connected to terminal 22)
Required detector current in operation	min. 6 µA
Possible detector current in operation	max. 200 µA

Measuring circuit for detector current measurement

Ionization probe

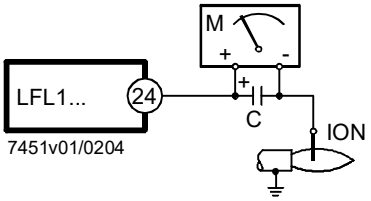

For detector currents, refer to chapter ‘Technical data’.

Legend

C Electrolytic condenser 100...470 µF; DC 10...25 V
ION Ionization probe
M Microammeter Ri max. 5,000 Ω

Flame supervision with QRA2/QRA4/QRA10 UV flame detector

Supply voltage	
- Operation	AC 330 V ±10 %
- Test	AC 380 V ±10 %
Required detector current	min. 70 µA
Possible detector current	
- Operation	max. 700 µA
- Test	max. 1000 µA During the prepurge time with higher test voltage: Self-ignition and extraneous light test
Perm. length of detector cable	
- Normal cable, laid separately (multicore cable not permitted)	max. 100 m max. 200 m (e.g. high-frequency cable; shielding connected to terminal 22)
- Shielded cable	

Notes

Lifetime of the UV cell.

UV cells and the QRA2/QRA4/QRA10 UV flame detector are subject to wear and tear and must be replaced as part of regular maintenance, at the latest at the end of the average lifetime of the UV cell. The lifetime of the UV cell corresponds to approx. 10,000 hours at a maximum of +50°C; higher ambient temperatures reduce the lifetime considerably.

For details, refer to chapter ‘Technical data’ in data sheet N7712 for the QRA2/QRA10 UV flame detector.

For details, refer to chapter ‘Technical data’ in data sheet N7711 for the QRA4 UV flame detector.

Measuring circuit for detector current measurement

QRA2/QRA4/QRA10 UV flame detectors

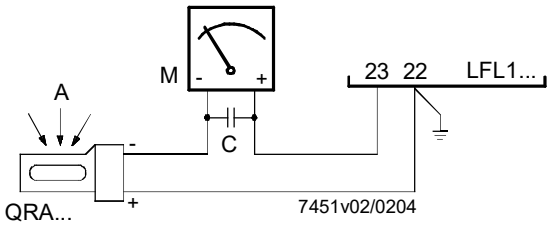

For detector currents, refer to chapter ‘Technical data’.

Legend

C Electrolytic condenser 100...470 µF; DC 10...25 V

M Microammeter Ri max. 5,000 Ω

Function

2-stage direct spark flame burner

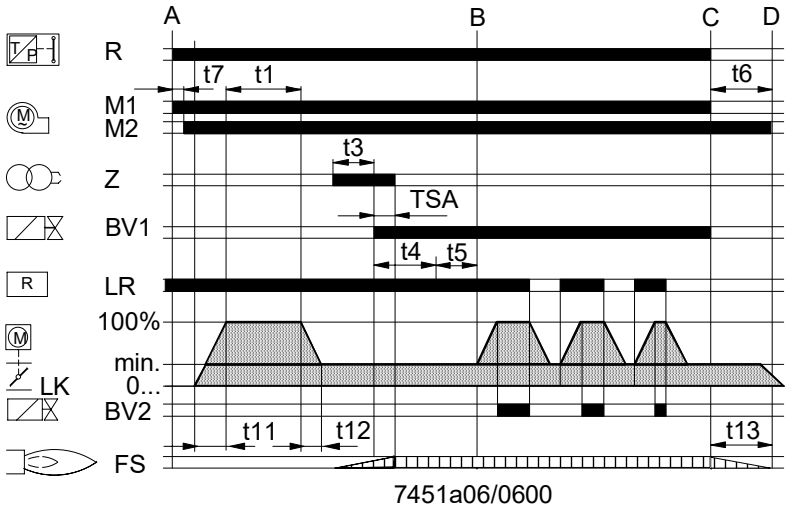

7451a06/0600

Modulating direct spark flame burner

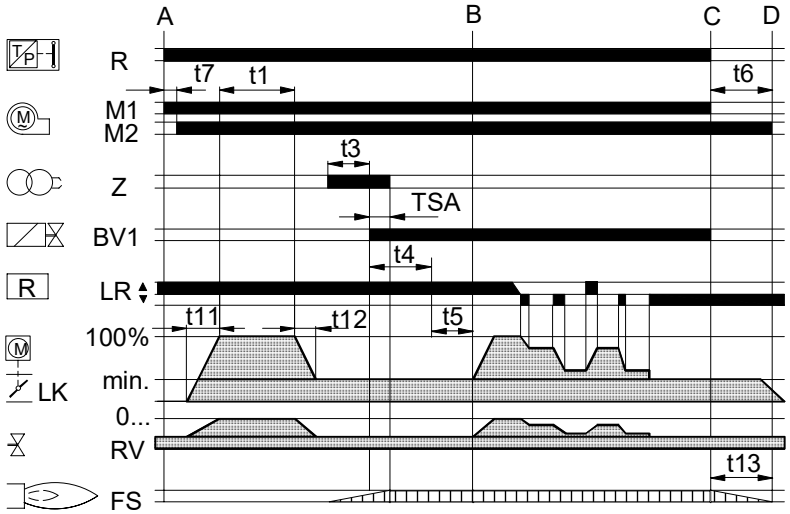

7451a07/0600

2-stage interrupted pilot burner

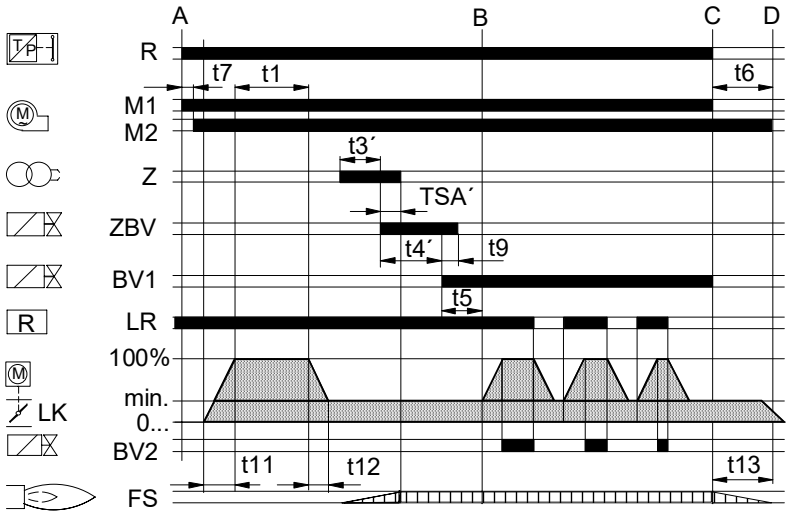

7451a08/0202

Legend

BVx	Fuel valve
FS	Flame signal amplifier
LK	Air damper
LR	Load controller
Mx	Fan or burner motor
R	Control thermostat or pressurestat
RV	Modulating fuel valve
Z	Ignition transformer
ZBV	Pilot gas valve
A	Start command by «R»
B	Operating position of burner
B-C	Burner operation
C	Controlled shutdown
C-D	Sequence switch travels to start position «A», postpurging
D-A	End of control sequence
t1	Prepurge time with air damper fully open
t3/t3´	Preignition time
t4/t4´	Interval «BV1-BV2» or «BV1-LR»
t5	Interval between voltage at terminal 19 and terminal 20
t6	Postpurge time
t7	Interval between start command and voltage at terminal 7
t9	2nd safety time with burners equipped with a pilot burner
t11	Air damper's running time to the fully OPEN position
t12	Air damper's running time to the low-fire position
t13	Permissible afterburn time
TSA/ TSA´	Ignition safety time

Function (cont'd)

General

The following features enable the LFL1 to offer a high level of additional safety:

- Detector and extraneous light test are resumed immediately on completion of the afterburn time «t13». Fuel valves that are not closed, or not fully closed, immediately initiate lockout on completion of the afterburn time «t13». The test will only be terminated when the prepurge time «t1» of the next startup sequence has elapsed.
- The proper functioning of the flame supervision circuit is automatically checked during each startup phase of the burner.
- During the postpurge time «t6», the control contacts for the release of fuel are checked to ensure they have not welded.
- The built-in unit fuse protects the control contacts against overloads.

Control of the burner

- Burner operation with or without postpurging
- Fan motors with a current draw of up to 4 A can be connected directly → starting current max. 20 A (max. 20 ms)
- Separate control outputs for one pilot valve, which will be shut on completion of the second safety time
- Separate control outputs for the actuator's positioning directions «OPEN», «CLOSE» and «MIN»
- Checked air damper control to ensure prepurging with the nominal amount of air
- Checked positions:
  - «CLOSED» or «MIN» on startup → low-fire position
  - «OPEN» at the start of prepurging
  - «MIN» on completion of prepurging

  If the actuator does not drive the air damper to the required position, the burner startup sequence will be stopped
- 2 control outputs for the release of the second and third output stage, or load control
- When load control is enabled, the control outputs for the actuator are galvanically isolated from the control section of the LFL1
- Connection facilities for
  - remote lockout warning device
  - remote reset
  - remote emergency shutdown
- For LFL1s in series 01, the safety time for single-pipe burners can be increased from 2.5 seconds to 5 seconds by changing the circuitry (refer to chapter 'Connection examples'), provided that the applicable local safety regulations permit the longer time

Flame supervision

- With the ionization probe, in networks with earthed or nonearthed neutral conductor. For this kind of supervision, the flame supervision circuit is designed such that possible disturbances of the ionization current due to the ignition spark normally have no impact on the establishment of the flame signal. A short-circuit between ionization probe and burner ground causes loss of the flame signal
- With a QRA2/QRA4/QRA10 UV flame detector (gas burner and oil burner)
- With an ionization probe and a QRA2/QRA4/QRA10 UV flame detector used simultaneously (e.g., for two-pipe burners or gas-electrically ignited oil burners)

Preconditions for startup

If the required input signals are missing on startup, the LFL1 interrupts the startup sequence at the points marked by symbols or initiates a lockout where required by safety regulations. The symbols used below correspond to those of the LFL1 lockout position indicator.

Preconditions for burner startup

- LFL1 is not locked in the lockout position
- Sequence switch must be in its start position → voltage at terminals 4 and 11 present
- Air damper closed
- End switch «z» for the «CLOSED» position must feed voltage from terminal 11 to terminal 8
- The contacts of control thermostat or pressurestat «W» and other contacts of switching devices connected between terminal 12 and «LP» must be closed → e.g. control contact for the oil preheater's temperature
- Terminal 4 must be live
- The N.C. contact of the air pressure switch must be closed → «LP» test

Startup sequence

A **Start command delivered by «R»**

→ «R» closes the start control loop between terminals 4 and 5

- The sequence switch starts running
  - Only prepurging, power is immediately fed to the fan motor connected to terminal 6
  - Prepurging and postpurging; on completion of «t7», power is fed to the fan motor or flue gas fan connected to terminal 7
- On completion of «t16», the control command to open the air damper is delivered via terminal 9
- No power is fed to terminal 8 during the positioning time
- The sequence switch continues its travel only after the air damper has fully opened

t1 **Prepurge time with air damper fully open**

- During «t1», the correct functioning of the flame supervision circuit is tested
- If test is not successful, the burner control will initiate lockout

Shortly after the start of «t1», the air pressure switch must change over from terminal 13 to terminal 14.

→ Otherwise lockout

→ Start of air pressure check

At the same time, terminal 14 must be live since the ignition transformer will be powered and the fuel released via this current path.

After the prepurge time has elapsed, the LFL1 drives the air damper to the low-fire position via terminal 10, as defined by the switching point of the auxiliary switch (m). During the positioning time, the sequence switch remains stopped. Shortly thereafter, the sequence switch motor is switched to the control section of the LFL1; from this point on, position signals to terminal 8 no longer influence the remaining startup sequence of the burner (or subsequent burner operation):

t5 **Interval**

- After the interval (t5) has elapsed, terminal 20 is energized; at the same time, control outputs 9 to 11 and input 8 are now galvanically isolated from the control section of the LFL1
  → The LFL1 is now protected against backfeeding from the load control circuit
- The LFL1 startup sequence ends with the release of the load controller (LR) at terminal 20
- After a number of idle steps (steps with no change of the contact position), the sequence switch switches itself off

Direct spark flame burners

TSA **Ignition safety time**

On completion of «TSA», a flame signal must be present at terminal 22. It must not be interrupted until controlled shutdown takes place → otherwise lockout

t3 **Preignition time**

Release of fuel via terminal 18

t4 **Interval «BV1 – BV2» or «BV1 - LR»**

- On completion of «t4», terminal 19 is live
- That powers «BV2» connected to the actuator's auxiliary switch «v»

Interrupted pilot burners

t3 **Preignition time**
t3´ Release of fuel for pilot burner via terminal 17

TSA **Ignition safety time**
TSA´ On completion of «TSA», a flame signal must be present at terminal 22. It must not be interrupted until controlled shutdown takes place
→ otherwise non-volatile lockout

t4 **Interval «ZBV-BV1»**
t4´ Up to the release of the fuel valve at terminal 19 for the main burner's start load

t9 **Second safety time**
On completion of the second safety time, the main burner must have been ignited by the pilot burner since terminal 17 becomes dead as soon as this time has elapsed, causing the pilot valve to close

B **Operating position of the burner**

B-C **Burner operation**
- During burner operation, «LR» drives the air damper to the high-fire or low-fire position, depending on the demand for heat
- Release of high-fire is enabled by auxiliary switch «v» in the actuator
- In the event of loss of flame during operation, the LFL1… will initiate lockout

C **Controlled shutdown**
On controlled shutdown, the «BVx» will immediately be closed. At the same time, the sequence switch starts and programs «t6»

C-D **The sequence switch travels to start position «A», postpurging**
When burner off time starts, control terminals 11 and 12 carry voltage to drive the air damper to the fully CLOSED position. Flame signal supervision also remains active during burner off times

t6 **Postpurge time**
- Fan «M2» connected to terminal 7
- Shortly after the start of «t6», power is fed to terminal 10
  → air damper will be driven to the MIN position
- Full closing of the air damper starts only shortly before «t6» has elapsed
  → triggered by the control signal at terminal 11
- During the following burner off period, terminal 11 remains live

t13 **Permissible afterburn time**
During «t13», the flame signal input can still receive a flame signal
→ no lockout

D-A **End of control sequence**
→ start position
As soon as the sequence switch has reached the start position – thereby switching itself off – the flame detector and extraneous light test will start again.
During burner off periods, the flame supervision circuit is live. A faulty flame signal of a few seconds will initiate lockout.
Short ignition pulses of the UV tube, caused for instance by cosmic radiation, do not lead to lockout.

The safety time (TSA‘), preignition time (t3‘), and interval (t4‘) are provided only for LFL1s in series 01.

Control sequence under fault conditions and lockout indication

In case of any faults, the fuel supply is always interrupted immediately. In the event of any kind of fault, the sequence switch will stop and, with it, the lockout indicator.

The symbol above the indicator's reading mark gives the type of fault:

◀	No start	• One of the contacts is not closed (also refer to «Preconditions for burner startup») • Extraneous light Lockout during or after completion of the control sequence. Examples: – Flames that have not extinguished – Leaking fuel valves – Defect in the flame supervision circuit
▲	Startup interruption	• Terminal 8 has not received the OPEN signal from end switch «a» • Terminals 6, 7 and 14 remain live until the fault has been corrected
P	Lockout	• No indication of air pressure at the beginning of the air pressure check • Loss of air pressure after the air pressure check
■	Lockout	• Defect in the flame supervision circuit
▼	Startup interruption	• Terminal 8 has not received the positioning signal from auxiliary switch «m» for the low-fire position • Terminals 6, 7 and 14 remain live until the fault has been corrected
1	Lockout	• No flame signal on completion of safety time «TSA»
2	Lockout	• No flame signal on completion of the second safety time (flame signal of main flame with interrupted pilot burners)
I	Lockout	• Loss of flame signal during operation

After the reset, the LFL1 sequence switch first returns to the start position and then initiates a new burner startup. If lockout occurs any other moment in time between start and preignition not indicated by a symbol, the usual cause is a premature flame signal, that is, a faulty flame signal, caused for instance by a self-igniting UV tube.

Lockout indicator



LFL1 Series 01



LFL1 Series 02

a-b Startup sequence

b-b´ Idle steps
(with no contact confirmation)

b (b´)-a Postpurge program

• Duration of safety time with direct spark flame burners

•• Duration of safety times with interrupted pilot burners

- The LFL1 can be reset immediately after lockout:
  – Do not press the lockout reset button for more than 10 seconds
- The sequence switch always returns to its start position first
  – After resetting
  – After correction of a fault which resulted in plant shutdown
  – After each power failure
  During that period of time, power is only fed to terminals 7 and 9...11.
- The LFL1 then runs through the burner restart sequence

☞ Note!
Do not press the lockout reset button for more than 10 seconds.

Connection diagrams (for circuit variants, refer to chapter ‘Connection examples’)

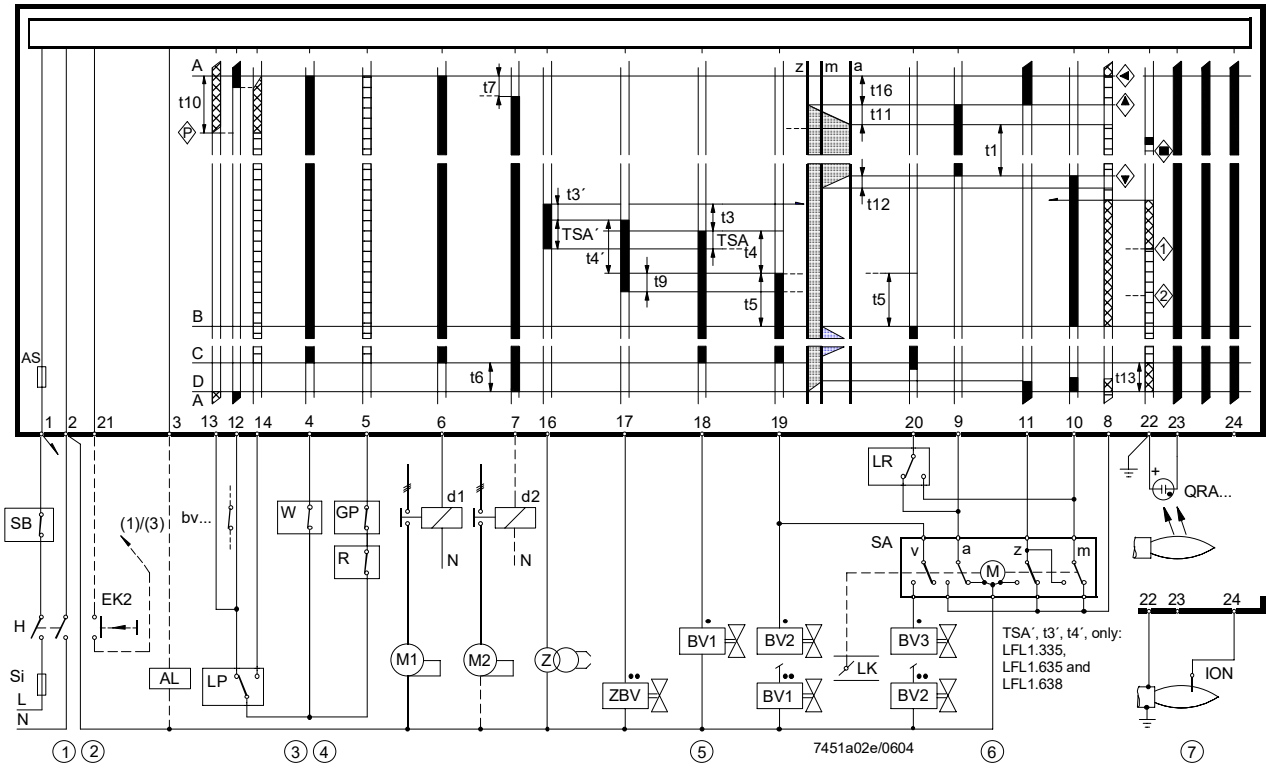

Attention!
Do not press lockout reset button «EKx» for more than 10 seconds!
For the connection of the safety shutoff valve, refer to the plant diagram provided by the burner manufacturer.

Caution!
Risk of damage to the switching contacts!
If the external primary fuse (Si) is blown due to overload or short-circuit at the terminals, the LFL1 must be replaced.

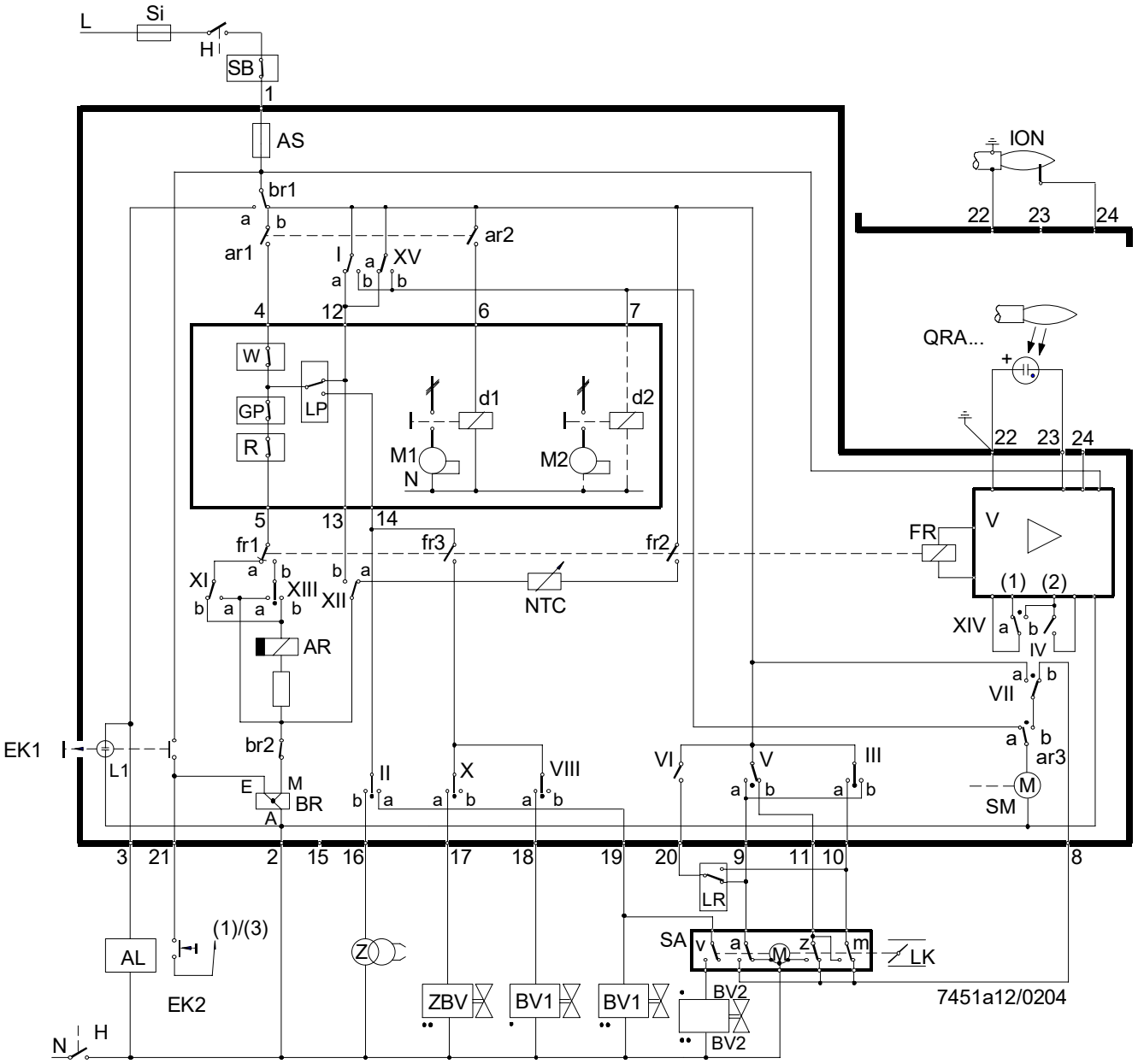

Attention!
Do not press lockout reset button «EKx» for more than 10 seconds!
For the connection of the safety shutoff valve, refer to the plant diagram provided by the burner manufacturer.

Caution!
Risk of damage to the switching contacts!
If the external primary fuse (Si) is blown due to overload or short-circuit at the terminals, the LFL1 must be replaced.

Switchgear sequence

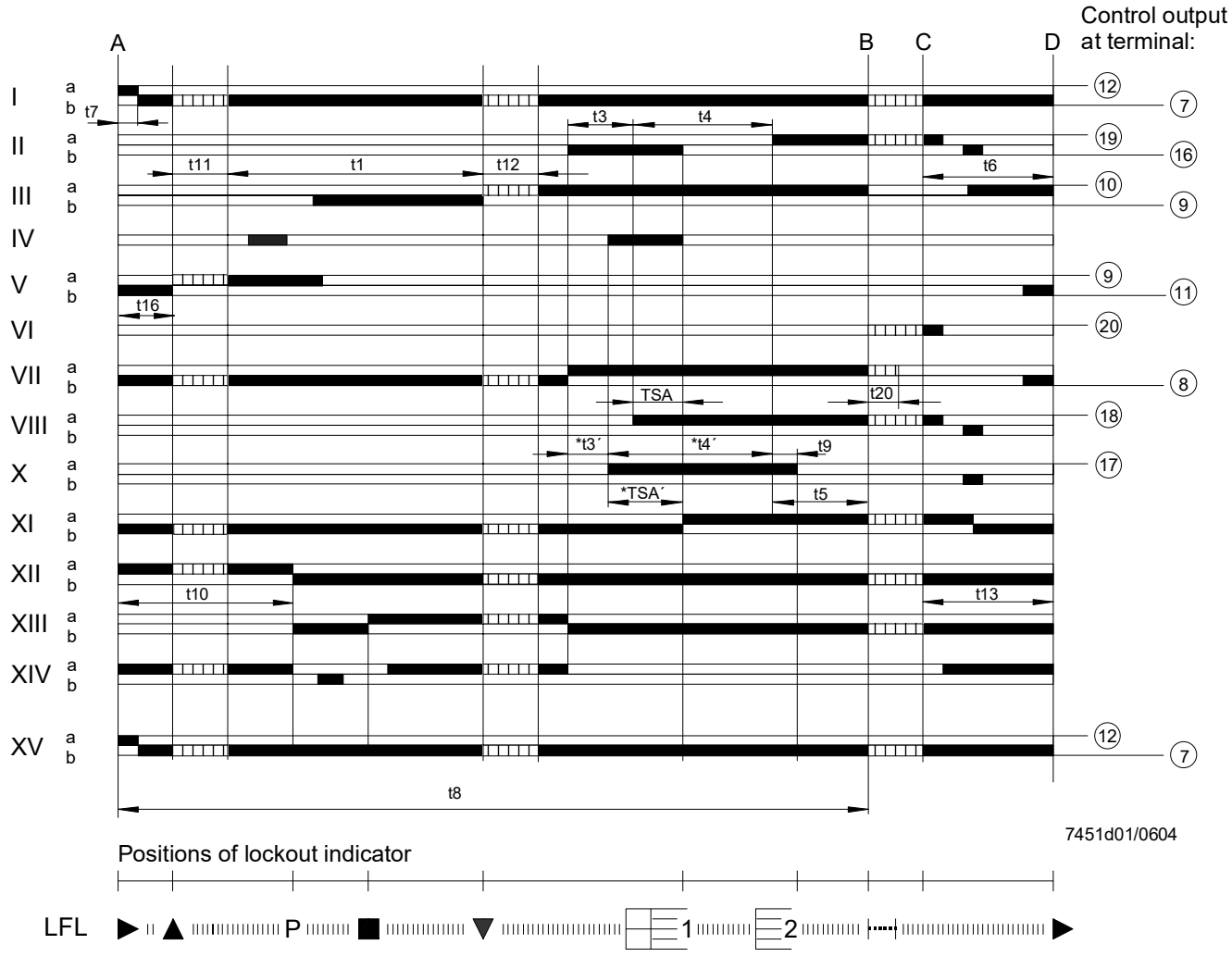

Safety time (TSA‘), preignition time (t3‘), interval (t4‘):
These times only apply to LFL1s in series 01: LFL1.335, LFL1.635, and LFL1.638.
They do not apply to types in series 02, as cams X and VIII switch simultaneously.

Connection examples and program sequence

Doubling the safety time with direct spark flame burners

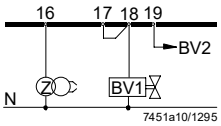

Only when using an LFL1 in series 01.

This circuit change (linking terminals 17 and 18) reduces the preignition time by 50 %.

Extension of the safety time is only permitted if in compliance with the relevant national standards.

Burner without air damper

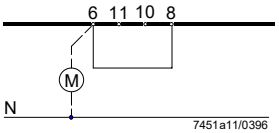

For burners without an air damper (or with an air damper not controlled and supervised by the LFL1), terminal 8 must be connected to terminal 6; otherwise, the LFL1 cannot perform burner startup.

Reversed polarity protection with AGM30

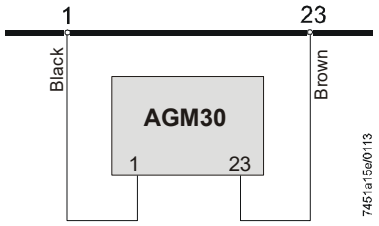

If the mains cables (L–N) are reversed, the AGM30 polarity protection simulates a flame signal (extraneous light). The LFL1 goes into fault.

2-stage direct spark flame burner

Load control by a 2-position controller. The air damper is closed during burner off periods.

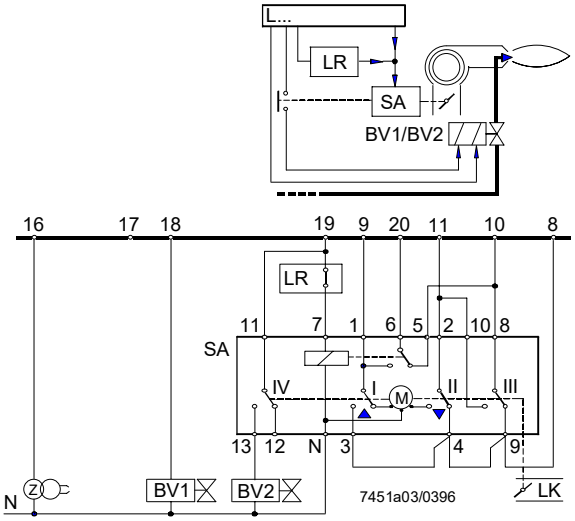

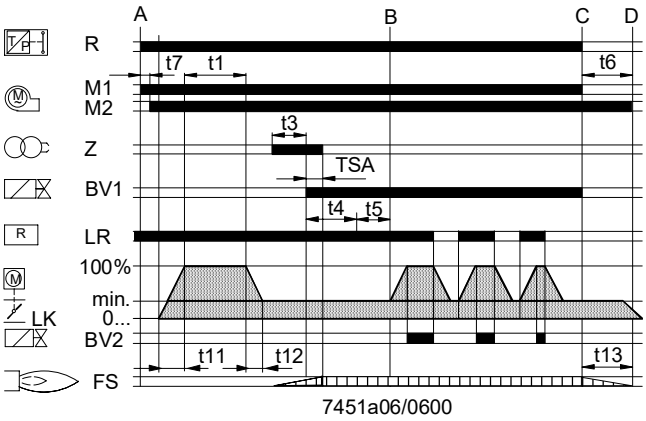

Control of the actuator (SA) according to the single-wire control principle (actuator (SA): e.g., SQN3 in accordance with data sheet N7808). For the other connections, refer to chapter ‘Connection diagrams’.

Modulating direct spark flame burner

Load control by a modulating controller with galvanically separated control contacts for the positioning directions OPEN or CLOSE.

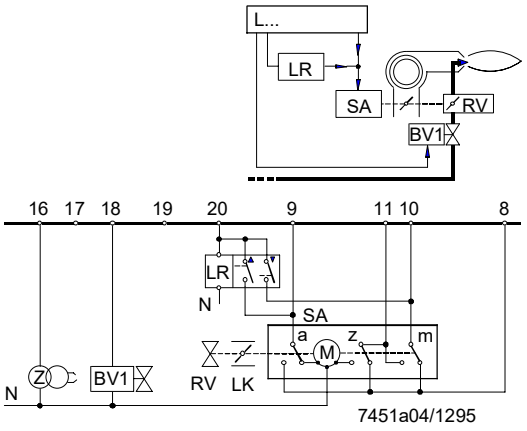

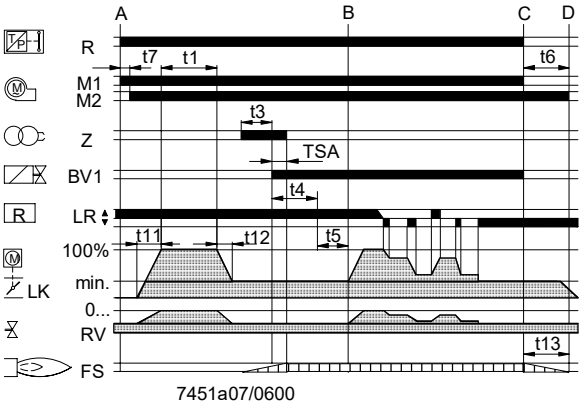

The air damper is kept closed during burner off periods. For the other connections, refer to chapter 'Connection diagrams'.

2-stage interrupted pilot burner (burner with pilot burner)

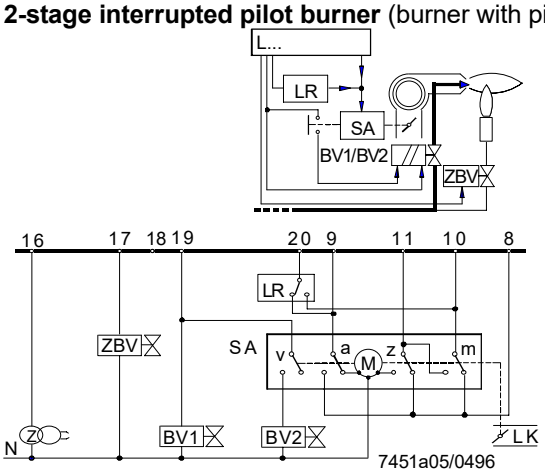

Controlled and supervised by an LFL1 in series 01.

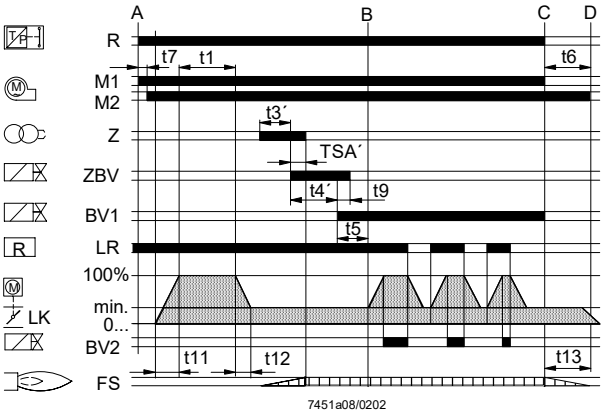

During operating pauses, the air damper is closed. For the other connections, refer to chapter 'Connection diagrams'.

Legend

a	Changeover end switch for air damper's OPEN position
AL	Remote lockout warning device (alarm)
AR	Load relay with contacts «ar...»
AS	Unit fuse
BR	Lockout relay with contacts «br...»
BVx	Fuel valve
bv...	Control contact for the CLOSED position of gas valves
d1 / d2	Contactor or relay
EKx	Lockout reset button
FR	Flame relay with contacts «fr...»
FS	Flame signal
GP	Gas pressure switch
H	Main isolator
ION	Ionization probe
L1	Fault signal lamp
L3	Operational readiness indication
LK	Air damper
LP	Air pressure switch
LR	Load controller
M1 / M2	Fan or burner motor
m	Changeover auxiliary switch for the air damper's MIN position
NTC	NTC resistor
QRA	UV detector
R	Control thermostat or pressurestat
RV	Modulating fuel valve
SA	Air damper actuator
SB	Safety limiter
Si	External fuse
SM	Synchronous motor of sequence switch
V	Flame signal amplifier
v	In the actuator: Changeover auxiliary switch for the position-dependent release of fuel
W	Limit thermostat or pressure switch
Z	Ignition transformer
z	In the actuator: End switch for the air damper's CLOSED position
ZBV	Pilot gas valve

(1)	Input for increasing the operating voltage for the QRA2/QRA4/QRA10 UV flame detector (detector test)
(2)	Input for forced energizing of the flame relay during the functional test of the flame supervision circuit (contact XIV) and during safety time «TSA» (contact IV)

•	Valid for direct spark flame burners
••	Valid for interrupted pilot burners with a pilot burner, which is switched off following the ignition of the main burner

A	Start command given by the temperature controller
A-B	Startup program
B	Operating position of the burner
B-C	Burner operation
C	Controlled shutdown via control thermostat or pressurestat (R)
C-D	Sequence switch runs to the end position following controlled shutdown via control thermostat or pressurestat (R)
D-A	End position of the LFL1 → corresponds to the start position

■	Control signals of the LFL1
▩	Permissible input signals
▥	Required input signals: If these signals are not present at the points in time marked by symbols or during the hatched periods of time, the burner control interrupts the startup sequence or initiates lockout

Legend (cont'd)

Lockout position indication when there is no input signal (refer to chapter 'Control program in the event of faults'):

◀	No start
▲	Startup interruption
▼	Startup interruption
■	Lockout (disturbance in the flame supervision circuit)
1	Lockout (no flame)
2	Lockout (no flame)
P	Lockout (no air pressure)
I	Lockout

Time table

TSA	Ignition safety time
TSA´	Ignition safety time or first safety time (startup with burners using pilot burners)
t1	Prepurge time with air damper open
t3	Preignition time
t3'	Preignition time (long)
t4	Interval between voltage at terminals 18 and 19
t4´	Interval between start of TSA' and release of fuel valve at terminal 19
t5	Interval between voltage at terminal 19 and terminal 20
t6	Postpurge time (with «M2»)
t7	Interval between start command and power at terminal 7 (start delay for «M2»)
t8	Duration of startup sequence (without «t11» and «t12»)
t9	Second safety time with burners using pilot burners
t10	Interval from start to the beginning of the air pressure check, excluding running time of air damper
t11	Air damper running time to the OPEN position
t12	Air damper running time to the low-fire position MIN
t13	Permissible afterburn time
t16	Interval until OPEN command for the air damper is given
t20	Interval to the self-shutdown of the sequence switch after startup

Dimensions

Dimensions in mm

LFL1

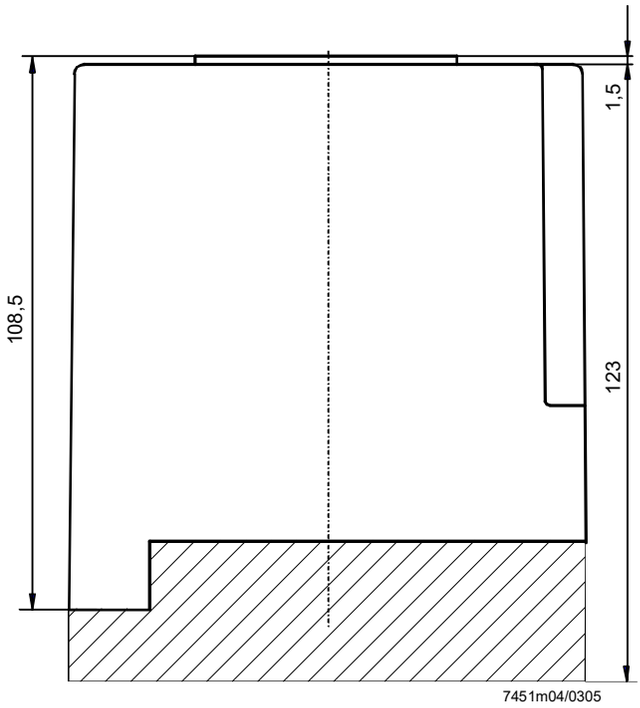

Plug-in base AGM410490550 / AGM14.1

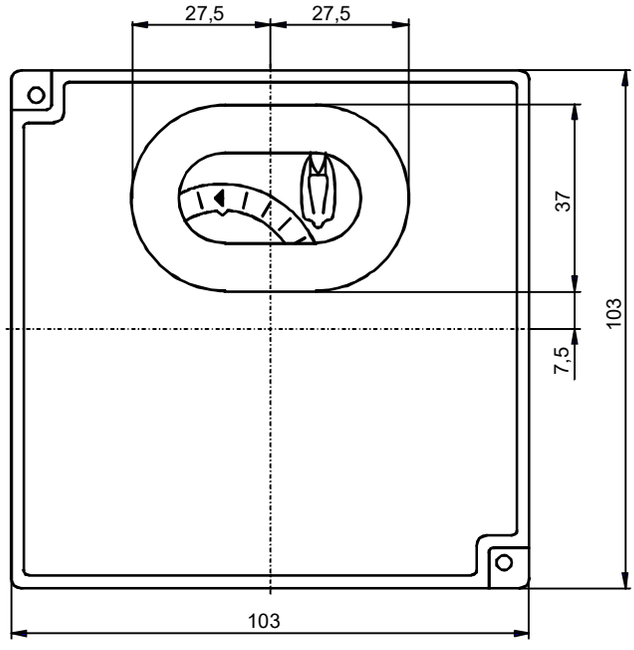

© 2025 Siemens AG Smart Infrastructure, Berliner Ring 23, D-76437 Rastatt
Subject to change!

ПРОМЭЛЕКТРОНИКА / sales@prom-elec.com