SIEMENS

7454



Gas Burner Control LFL1.148

LFL1.148 gas burner control

- **for atmospheric gas burners in intermittent operation**
- **flame supervision with ionization probe**

The LFL1.148 and this Data Sheet are intended for use by OEMs which integrate the burner controls in their products!

Use

- For the supervision of 1- or 2-stage atmospheric gas burners
- For use with medium- to high-capacity burners
- For intermittent operation (at least 1 controlled shutdown in 24 hours)
- The gas burner has a connection facility for an auxiliary fan or flue gas fan (e.g. for condensing boilers)

Flame supervision is ensured by means of an ionization probe, 1 electrode is used for the first stage and 1 for the second stage. Changeover takes place automatically after release of the second fuel valve.

ПРОМЭЛЕКТРОНИКА / sales@prom-elec.com

Supplementary documentation

Product type	Type of documentation	Documentation number
LFL1	Data sheet	N7451

Disclaimer

Please note that this translation may not fully reflect all linguistic nuances, technical terminology, or cultural context of the original text. Although it has been prepared with due care, variations in content or interpretation cannot be entirely excluded. This translation is provided for general informational purposes only and shall **not** be regarded as legally binding or as the final version. For any official or legally binding matters, reference should always be made to the **original version** in German.

Warning notes

To avoid injury to persons, damage to property or the environment, the following warning notes must be observed!

Do not open, interfere with or modify the unit!

- All activities (mounting, installation and service work, etc.) must be performed by qualified staff
- **For safety reasons – self-test of the flame supervision circuit, etc. – at least one controlled shutdown must take place every 24 hours**
- Before performing any wiring changes in the connection area of the LFL1.148, completely isolate the unit from the mains supply (all-polar disconnection)
- Ensure protection against electric shock hazard by providing adequate protection for the burner control's connection terminals
- Each time work has been carried out (mounting, installation, service work, etc.), check to ensure that wiring is in an orderly state and make the safety checks as described in *Commissioning notes*
- Press the lockout reset button only manually (do not apply a force of more than 10 N) without using any tools or pointed objects
- Do not press the lockout reset button on the unit or the remote lockout reset button for more than 10 seconds since this would damage the lockout relay inside the unit
- Fall or shock can adversely affect the safety functions. Such units must not be put into operation, even if they do not exhibit any damage

Mounting notes

- Ensure that the relevant national safety regulations are complied with
- Connect the earthing lug inside the terminal base to burner ground using a screw with a lockwasher or similar

Installation notes

- Always run the high-voltage ignition cables separately, keeping as much distance as possible from the LFL1.148 and other cables
- Do not mix up live and neutral conductors
- Risk of damage to the switching contacts!
  If the external primary fuse (Si) is blown due to overload or short-circuit at the terminals, the LFL1 must be replaced.

Electrical connection of the ionization probe

It is important to achieve practically disturbance- and loss-free signal transmission:

- Never run the ionization cable together with other cables
  – Line capacitance reduces the magnitude of the flame signal
  – Use a separate cable of low capacitance
- The ionization probe is not protected against electric shock hazard
- Locate the ignition electrode and the ionization probe such that the ignition spark cannot arc over to the ionization probe (risk of electrical overloads)

Commissioning notes

- Prior to commissioning, check to ensure that wiring is in an orderly state
- When commissioning the plant or when doing maintenance work, make the following safety checks:

	Safety check to be carried out	Anticipated response
a)	Burner startup with ionization cable disconnected	Lockout at the end of safety time (TSA)

Standards and certificates

Applied directives:

- Low-voltage directive 2014/35/EC
- Directive for pressure devices 2014/68/EC
- Gas Appliances Regulation (EU) (EU) 2016/426
- Electromagnetic compatibility EMC (immunity) *) 2014/30/EC

*) The compliance with EMC emission requirements must be checked after the burner control is installed in equipment

Compliance with the regulations of the applied directives is verified by the adherence to the following standards / regulations:

- Automatic burner control systems for burners and appliances burning gaseous or liquid fuels DIN EN 298
- Safety and control devices for gas burners and gas burning appliances DIN EN 13611
- Automatic electrical controls for household and similar use Part 2-5: Particular requirements for automatic electrical burner control systems DIN EN 60730-2-5

The relevant valid edition of the standards can be found in the declaration of conformity!

Note on **DIN EN 60335-2-102**
Household and similar electrical appliances – Safety
Part 2-102: Particular requirements for gas, oil and solid-fuel burning appliances having electrical connections.
The electrical connections of the LFL1.148 and the AGM plug-in base comply with the requirements of EN 60335-2-102.

EAC Conformity mark (Eurasian Conformity mark)

UKCA conformity mark (UK compliance)

China RoHS
Hazardous substances table:
http://www.siemens.com/download?A6V10883536

Certified complete with plug-in base:

Life cycle

The LFL1.148 burner control has a designed lifetime* of 250,000 burner startup cycles which, under normal operating conditions in heating mode, corresponds to approx. 10 years of service (starting from the date of manufacture on the type label).

This lifetime is based on the endurance tests specified in standard EN 298 and the table containing the relevant test documentation as published by the European Association of Component Manufacturers (Afecor) (www.afecor.org).

The designed lifetime is based on use of the LFL1.148 burner control according to the data sheet. After reaching the designed lifetime in terms of the number of burner cycles, or after the corresponding usage time, the LFL1.148 burner control must be replaced by authorized personnel.

* The designed lifetime is not the warranty time specified in the Terms of Delivery

Disposal notes

The LFL1.148 contains electrical and electronic components and must not be disposed of together with domestic waste. Local and currently valid legislation must be observed.

Mechanical design

The LFL1.148 design corresponds in all respects to the standard types of the LFL1 range; refer to data sheet N7451.

Type summary

The type references apply to the LFL1.148 without an AGM plug-in base or flame detector. For ordering information for the AGM plug-in base and other accessories, refer to chapter ‘Accessories’.

Gas burner control, without AGM plug-in base **LFL1.148**
Article no.: **BPZ:LFL1.148**
AGM plug-in base not included in the scope of delivery and must be ordered separately.

Accessories (to be ordered separately)

Flame detector

Ionization probe
To be supplied by thirds.



Connection accessories for medium-capacity burner controls

Plug-in base **AGM410490550** with Pg11 threads for cable entry glands.
Article no.: **BPZ:AGM410490550**
Refer to Data Sheet N7230.



Plug-in base **AGM14.1** with M16 threads for cable entry glands.
Article no.: **BPZ:AGM14.1**
Refer to Data Sheet N7230.

Technical data

The technical data – except for the data listed below and the switching times of the sequence switch – can be taken from data sheet N7451 for the LFL1.

General unit data

Perm. length of detector cable	
• Normal cable, laid separately	Max. 50 m
• Shielded cable, shielding connected to terminal 22, e.g. high-frequency cable	Max. 100 m
Capacity	
• Output on startup (without fan assistance)	Any (with ignition < 120 kW)
• Nominal output	Any

Environmental conditions

Storage	
Temperature range	-20...+60 °C
Humidity	<95% r.h.
Transport	
Temperature range	-40...+60 °C
Humidity	<95% r.h.
Operation	
Temperature range	-20...+60 °C
Humidity	<95% r.h.
Installation altitude	Max. 2,000 m above sea level

Warning!
Condensation, formation of ice and ingress of water are not permitted!
If not observed, there is a risk of impairment of safety functions and of electric shock hazard.

Function

With regard to the control program and flame supervision, including testing of the flame supervision circuit, the mode of operation of the LFL1.148 corresponds to that of the standard types in the LFL1 range. Control of the actuator (SA) and the load controller (LR) differs from that of the LFL1s, particularly with respect to the air damper position at startup and the closing of the damper during controlled shutdown. Supervision of the respective start position is carried out via an auxiliary switch in the actuator, the contact of which must be included in the start control loop between terminals 4 and 5. The current path between terminals 4 and 5 must remain closed until controlled shutdown. During controlled shutdown, the air damper is driven to the CLOSED position via the sequence switch contact (VIb). Since the sequence switch of the LFL1.148 does not continue to run until the end switch (z) in the actuator changes over, an actuator (SA) with any desired running time may be selected.

The pilot flame is supervised by ionization probe (ION1), the main flame by ionization probe (ION2).

Warning!
On completion of the ignition safety time (TSA), a flame signal must be present at terminal 23 (ION1). On completion of the second safety time (t9), a flame signal must also be present at terminal 24 (ION2).

In the event of fault and lockout indication:

◀ **No start**
For example: Start control loop interrupted via actuator (SA)

■ **Lockout** due to a fault in the flame supervision circuit

▼ **Abortion of startup sequence** because the auxiliary switch in actuator (SA) has cut the start control loop

1 **Lockout**, because no flame signal was present on completion of the ignition safety time (TSA)

2 **Lockout** because no flame signal was present on completion of the second safety time

▌ **Lockout** because the flame signal was lost during burner operation

◀ **Lockout** on completion of the control program, due to extraneous light or a faulty flame signal
For example: Flame not extinguished

After the reset, the LFL1.148 sequence switch first returns to the start position and then initiates a new burner startup.

Connection diagram

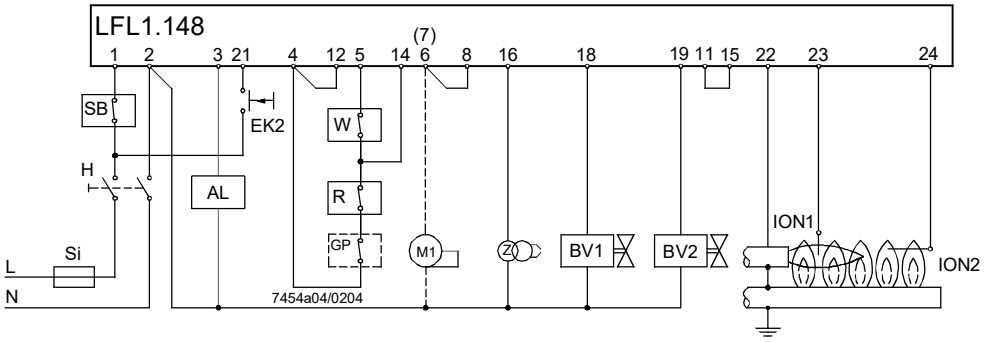

Caution!
Risk of damage to the switching contacts!
If the external primary fuse (Si) is blown due to overload or short-circuit at the terminals, the LFL1.148 must be replaced.

Connection examples

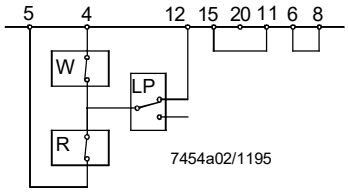

2-stage forced draft gas burner without load controller (LR) and without actuator (SA)

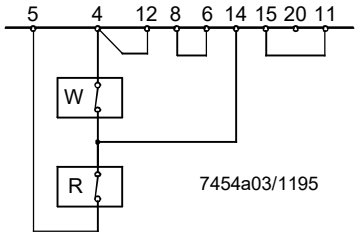

Atmospheric gas burner without fan assistance, load controller (LR) and actuator (SA)

Basic diagram

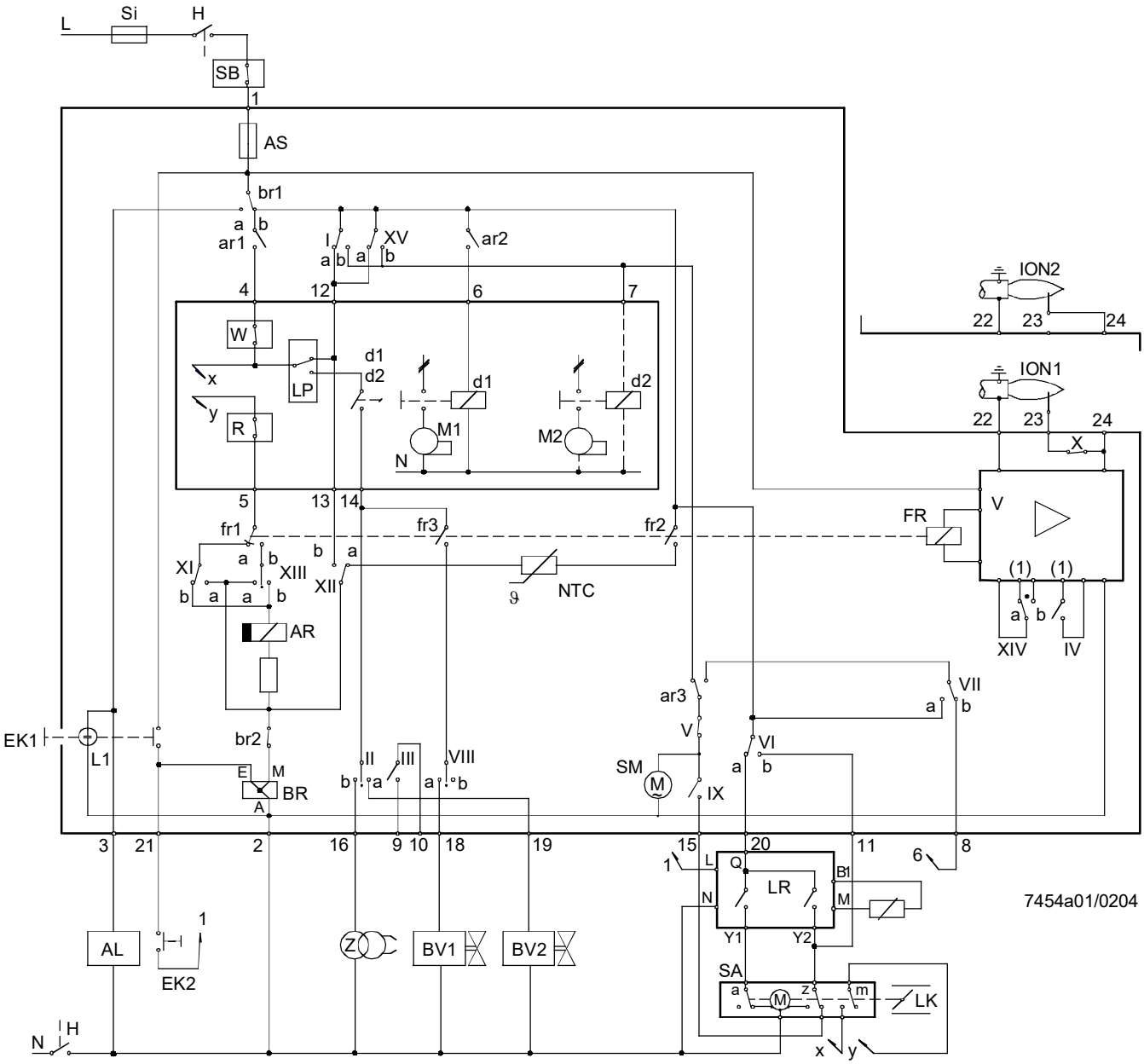

Warning!
Do not press reset bottom (EK) for more than 10 seconds!

Caution!
Risk of damage to the switching contacts!
If the external primary fuse (Si) is blown due to overload or short-circuit at the terminals, the LFL1.148 must be replaced.

Control program

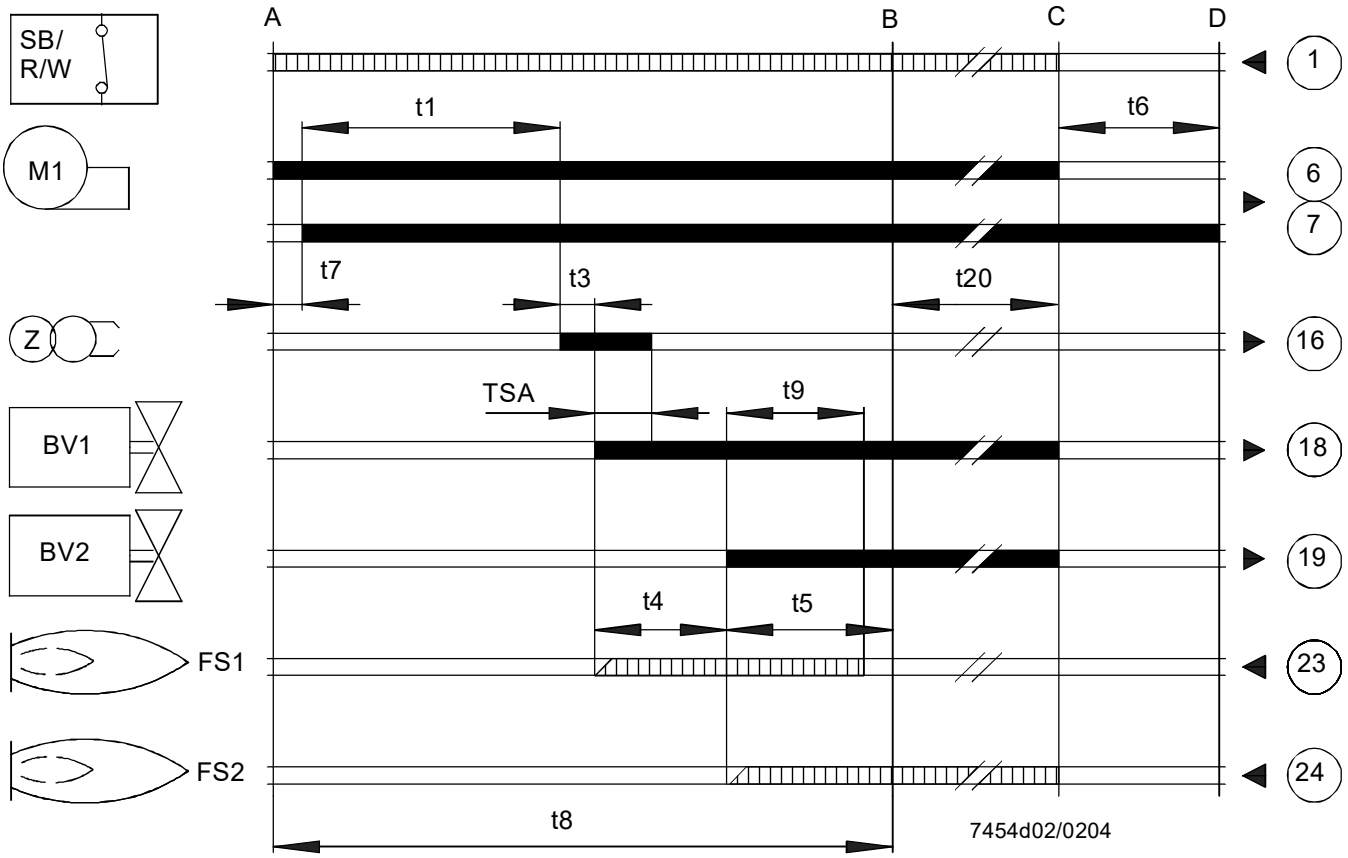

Diagram of switching mechanism

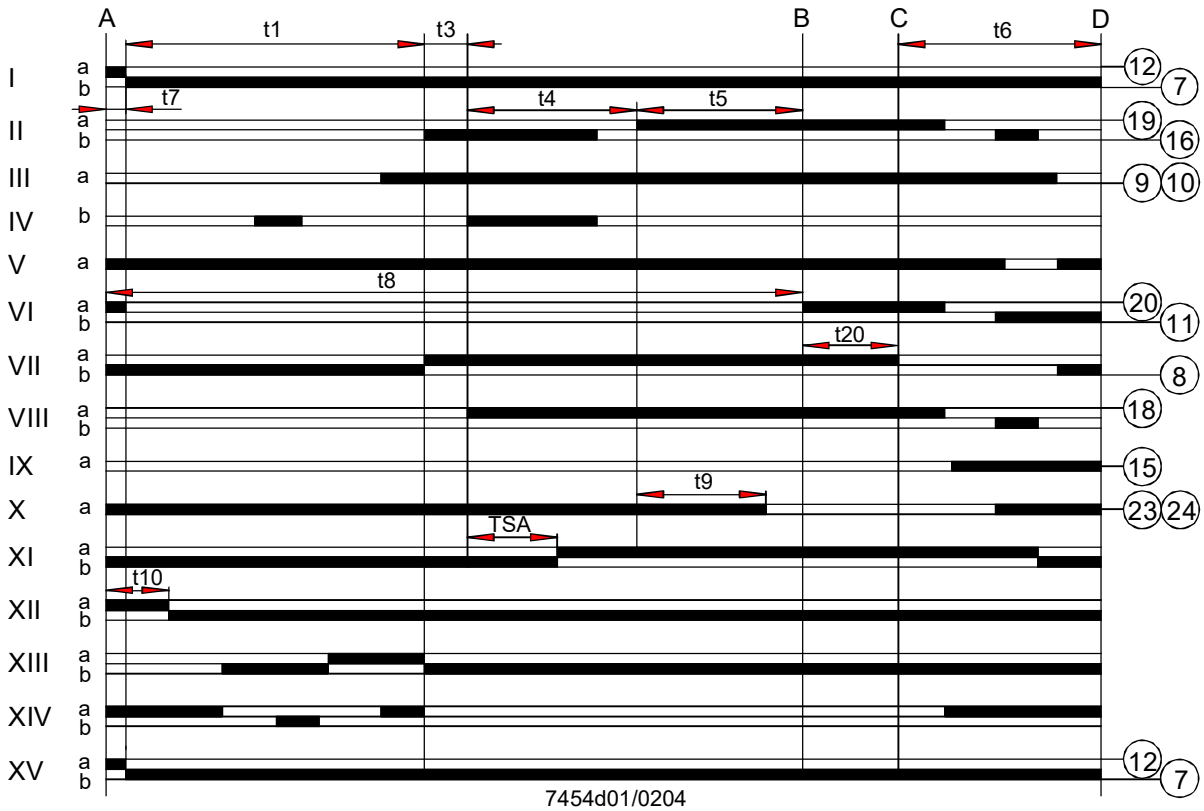

Legend

AL		Remote lockout indication → Alarm
AS		Unit fuse
AR		Main relay with contacts «ar...» → Working relay
BR		Lockout relay with contacts «br...»
BVx		Fuel valve
d1/d2		Contactor or relay
EKx		Reset button
IONx		Ionization probe
FR		Flame relay with contacts «fr...»
GP		Gas pressure switch
H		Main isolator
L1		Lockout warning lamp
LK		Air damper
LP		Air pressure switch
LR		Load controller
M1/M2		Fan or burner motor
NTC		NTC resistor
R		Control thermostat or pressurestat
SA		Air damper actuator
	a:	Changeover limit switch for actuator's OPEN position
	z:	Changeover limit switch for actuator's CLOSED position
SB		Safety limit thermostat
Si		External primary fuse
SM		Synchronous motor of sequence mechanism
V		Flame signal amplifier
(1)		Input for forced energizing of the flame relay during the functional test of the flame supervision circuit (contact «XIV») and during safety time (TSA) (contact «IV»)
W		Limit thermostat or pressure switch
Z		Ignition transformer

■	Output signals of the LFL1.148
▦	Required input signals

A	Start command given by the control thermostat
A-B	Startup sequence
B	Operating position of burner
B-C	Burner operation
C	Controlled shutdown by control thermostat or pressurestat (R)
C-D	Sequence mechanism runs to the end position after a controlled shutdown by control thermostat or pressurestat (R)
D	End position of the LFL1.148 → corresponds to the start position

Switching times in seconds

TSA	Ignition safety time	4 s
t1	Waiting time or prepurge time	14 s
t3	Preignition time	2 s
t4	Interval fuel valve (BV1-BV2)	8 s
t5	Interval between release of the 2nd fuel valve and the load controller (if present)	10 s
t6	Postpurge time	10 s
t7	Interval until voltage at terminal 7 is present	2 s
t8	Duration of startup program	36 s
t9	2nd safety time for 2nd stage	8 s
t10	Interval until air pressure check is started	6 s
t20	Steps of switching mechanism with no change in the program → Idle steps	26 s

Dimensions

Dimensions in mm

LFL1.148

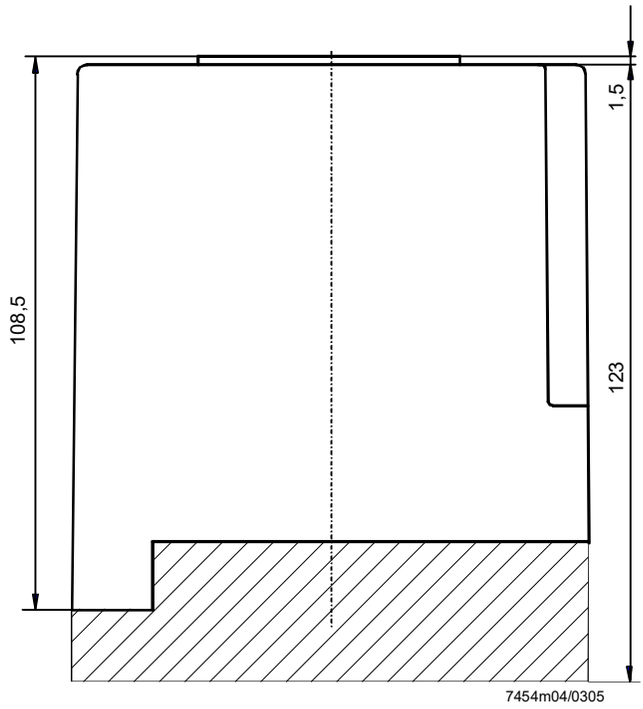

Plug-in base AGM410490550 / AGM14.1

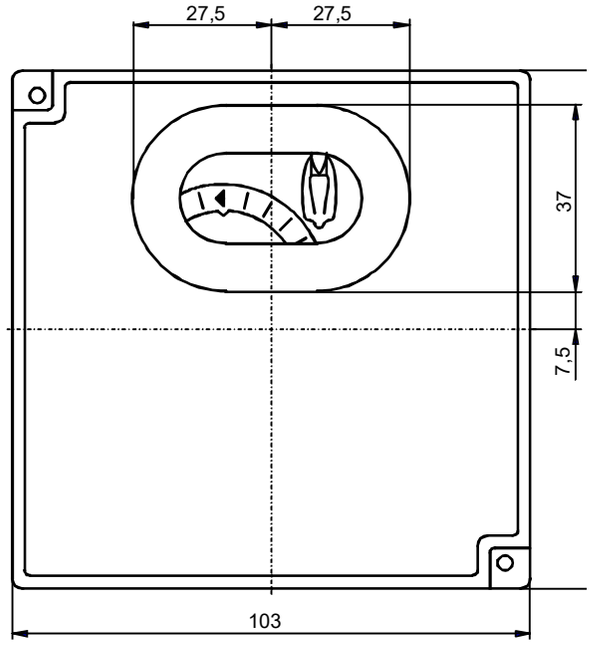

© 2025 Siemens AG Smart Infrastructure, Berliner Ring 23, D-76437 Rastatt
Subject to change!

ПРОМЭЛЕКТРОНИКА / sales@prom-elec.com