Automatic gas burner control for gas burners without fan, with intermittent ignition burner and exhaust gas monitoring

DUNGS®
Combustion Controls

DGAI. 69F

1.32



Old documentation - Only for your information!
Product is not available anymore

Technical description

The DGAI.69F is an automatic gas burner control as per EN 298 with the following features:

- Ionisation flame monitor
- Ignition flame burns continuously during heat request
- Restart attempt in case of flame failure in operation
- Exhaust gas monitor by means of NTC sensor
- Program sequence control by means of electronic timers
- Burner ignition by means of external ignition facilities
- Ignition gas solenoid valve
- Main gas solenoid valve
- LP gas solenoid valve
- Complete circuit on one PCB
- Connections for operation and fault display as well as remote unlock facility
- Rast 5 connectivity

Application

The automatic gas burner control DGAI.69F is suitable for igniting and monitoring gas burners without blower as per EN 297 for intermittent operation.
The DGAI.69F operates during heat request with permanently burning ignition burner at a heat capacity of
< 250 W and is therefore specially suited for gas burners whose main flames need not be monitored constantly according to the ionisation principle.

Approvals

EC type test approval as per EC Gas Appliance Directive:
DGAI.69F CE-0085 AR 0403

EC type test approval as per EC Pressure Equipment Directive:
DGAI.69F CE0036

Printed in Germany • Edition 02.10 • Nr. 225 755

ПРОМЭЛЕКТРОНИКА / sales@prom-elec.com

Automatic gas burner control DGAI.69F

The automatic gas burner control mounted on a PCB operates with electronic timers.
Therefore exact switching times are ensured during voltage and temperature fluctuations or very short switching cycles.
The DGAI.69F comprises:

- controller for program flow
- flame monitoring operating according to the ionisation principle
- exhaust gas monitor and exhaust gas sensor (NTC resistor) or 1 MΩ resistor instead of exhaust gas sensor.

Functional description

On receipt of a heat request from the regulator, the LPG pre-valve opens.
After a startup delay period of about 10 s during which startup self-monitoring is performed internally, the ignition starts and the ignition gas valve opens. The ignition is switched off by the ignition flame signal, and switches over to the so-called stabilising period during which the ignition flame must burn properly.
If the ignition flame goes out within the stabilising period, the ignition cuts in again immediately.
After the stabilising period, the main gas valve is opened provided that the flame is present.

The ignition flame remains connected during the complete burner operation period.

In the case of flame failure during operation, the main gas valve is closed within 1 s and a re-ignition attempt is performed immediately.
When the regulator is switched off, the LPG, ignition and main gas valves are switched off.
On receipt of a flame signal before fuel release, startup is blocked.
When exhaust gas flows from the flow protection relay, the equipment switches off and this is followed by an exhaust gas delay period.

Exhaust gas switch as per EN 297/VP100

A heat sensor (NTC resistor) monitors the temperature at the draft interrupter.
In case of irregular exhaust gas outlet the exhaust gas monitor switches off at approx. 65°C. After switch-off by the exhaust gas monitor, a timer is activated. Its time sequence starts when the exhaust gas sensor cools down to below 55°C.
The time sequence is approx. 15 min., the burner remains blocked even after the exhaust gas sensor has cooled down until the time sequence is terminated.
The exhaust gas sensor and its lines are monitored for interruption. A short circuit also leads to switch-off in the same way as excessive temperature.
The DGAI.69F therefore operates only with the exhaust gas sensor connected or an appropriate spare resistor (1Ω).

Old documentation. Only for your information! Product is not available anymore!

Functional / circuit diagram DGAI.69F

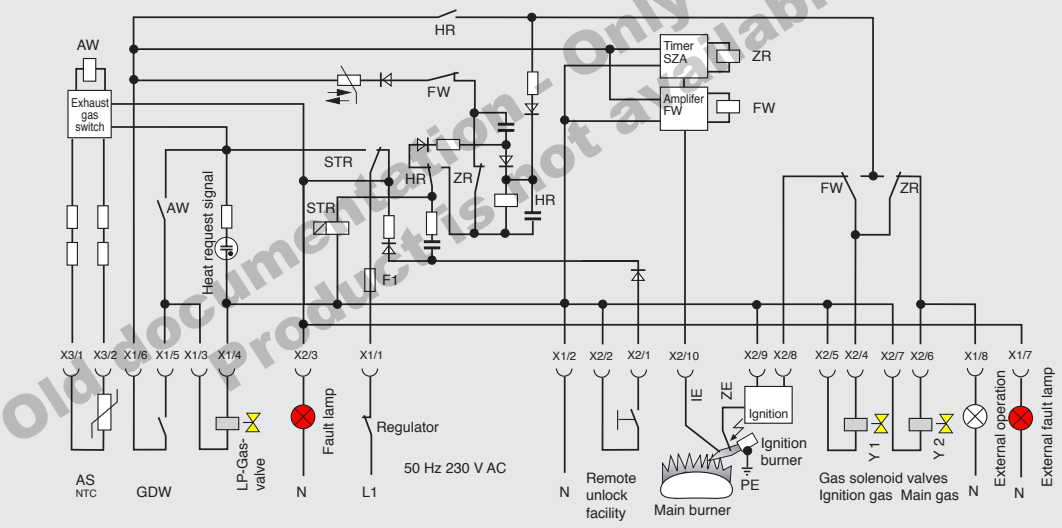

Wiring diagram DGAI. 69F

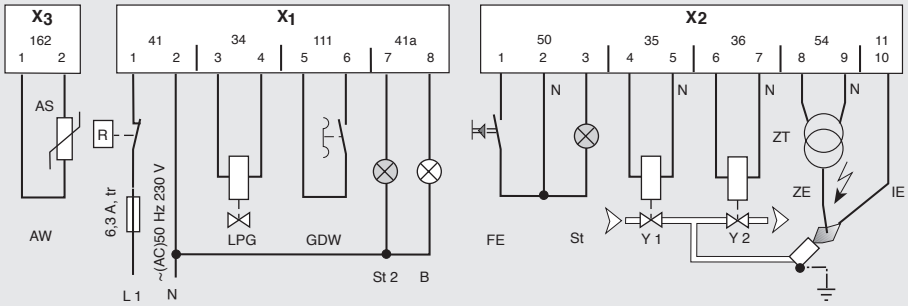

AW	Exhaust gas switch	IE	onisation electrode	St 2	External fault
AS	Exhaust gas sensor	LPG	LP gas valve	Y1	Ignition gas solenoid valve
B	Operation	PE-B	Burner ground	Y2	Main gas solenoid valve
FE	Remote unlock facility	R	Regulator	ZT	Ignition facility
GDW	Gas pressure switch	St	Fault	ZE	Ignition electrode

Functional and program sequence

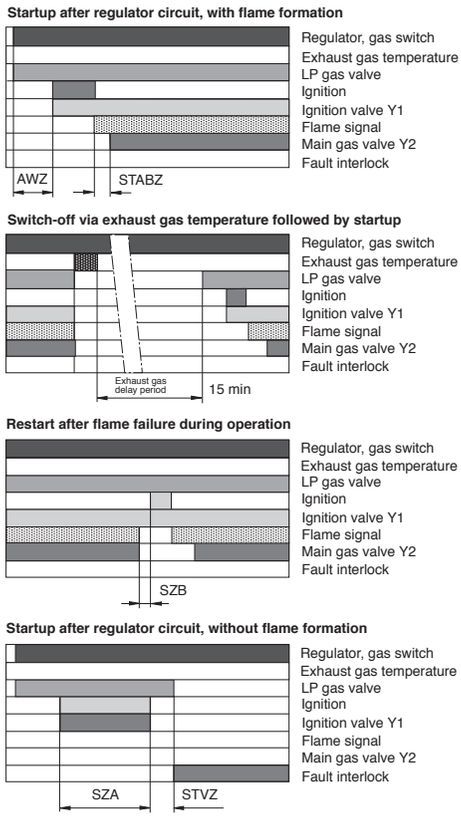

Program sequence periods

Startup delay period (AWZ)	approx. 3 s
Stabilising period (STABZ)	approx. 5 s
Safety period startup (SZA)	< 50 s
Safety period operation (SZB)	< 1 s
Fault interlocking period (STVZ)	approx. 5 s
Exhaust gas delay period	approx. 15 min.

The SZB is < 3 s immediately after main valve release and reduces to < 1 s after an operation of approx. 30 s.

Ionisation flame monitor

An ionisation electrode acts as a probe in the flame, the burner nozzle normally acts as ground.
Ensure that there is proper flame adhesion to the burner.
The burner nozzle must be properly connected to the opposite pole in the ionisation current return line.
Under normal power supply conditions, the opposite pole - N - is tied to ground potential. Connection of ground and/or protective grounding terminal to burner ground is sufficient.
If a buffer transformer is used, it is absolutely necessary that the burner ground is connected to the pole which is used instead of N. Otherwise the ionisation current has no return line. The situation may occur that, despite a proper flame and proper arrangement of the electrode, no or only a weak ionisation current can flow.

The material of the ionisation electrode and the insulation must be heat-resistant. A proven material is Kanthal for electrodes and a ceramic insulation made of aluminium oxide. The insulation resistance should be more than 50 MΩ.

Measuring the monitor current

The intensity of the ionisation current can be measured by means of a DC micro-ammeter. The current intensity should not undershoot 6 µA during operation. The maximum reachable ionisation current is approx. 50 µA. Fault shut-down takes place when the ionisation current undershoots approx. 1 µA.
For measurement purposes, the micro-ammeter is switched between the ionisation electrode and the connection plug.

Test equipment connection

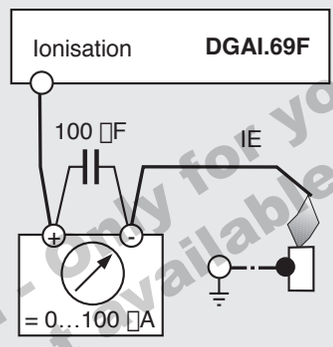

Installation and operating instructions

Installation

The automatic gas burner control can be installed in any position.

Electrical connection

Wiring has to be performed in compliance with the local prevailing regulations and the wiring diagram.

Startup

Before startup, check whether all connections are correct.
Check the following safety functions during startup:

1. Switch off regulators, switches and limiters.
2. Refer to gas pressure switch switching points
3. Flame detector
   Interrupt ionisation line and/or perform a short circuit between electrode and ground.
4. Test: Switch-off via exhaust gas temperature

Fault unlocking facility

In case of fault, the DGAI.65F is unlocked by means of an external contact.

Fuses

An internal fuse (4 A) protects the equipment from an output-side short circuit. The fuses cannot be replaced. For this reason, only DUNGS personnel may check and repair the automatic burner control.

External backup of the automatic gas burner control by means of a 6.3 A slow-blow and/or 10 A quick-acting back-up fuse.

⚠ Refer to the permitted switching capacities.
If a fuse is defective, check the safety function of the monitoring device, otherwise the contact may be welded by a short circuit.

⚠ If you do not observe these installation and operating instructions, it may result in personal injury or material damage. For this reason, strictly keep to the instructions. The warranty for the equipment will expire on any attempt to access the electronic circuits, i.e. automatically when the seal is broken.

⚠ The effects of leak search spray and similar substances may cause dangerous flame-simulating conditions on ionisation electrodes and conductors, e.g. ionisation ammeters. Therefore please handle leak search sprays and similar substances with extreme care so that they are only applied to the leak test points. If it is not possible to limit the use of these substances, ionisation electrodes and conductors must be protected before applying the substances. It is not sufficient to merely wipe off the leak search spray substance after application.

Old documentation - only for your information!
Product is not available anymore!

ПРОМЭЛЕКТРОНИКА / sales@prom-elec.com

Automatic gas burner control for gas burner without fan, with ignition burner intermittent and exhaust gas monitoring
DGAI. 69F

DUNGS®
Combustion Controls

Dimensions

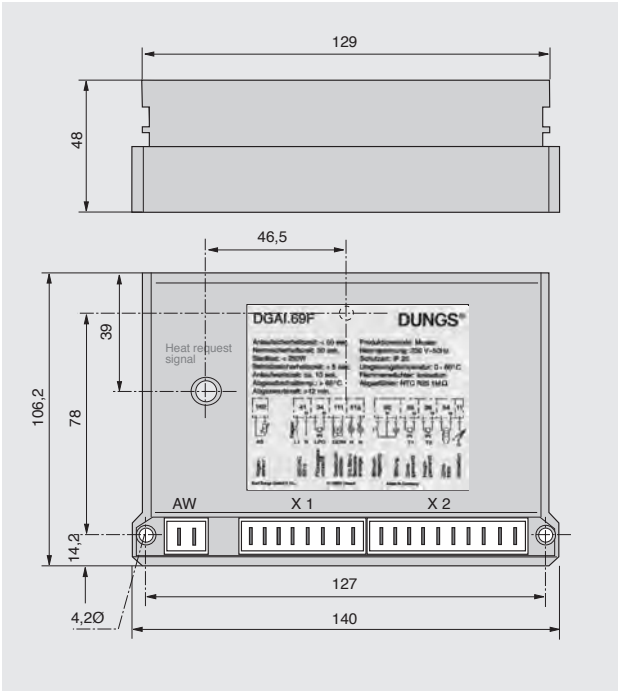

DGAI. 69F Connector table

Function	Slot no.	Pole no.	Coding Plug no.
Supply line/power supply	41	02	....[1] 02 K04
LPG-pre-valve	34	02	....[1] 02 K16
Gas pressure switch	111	02	....[1] 02 K05
Fault/unlock	50	03	....[1] 03 K04
Fault/operation	41a	02	....[1] 02 K06
Exhaust gas sensor	162	02	....[1] 02 K44
Ignition	54	02	....[1] 02 K03
Gas valve 1	35	02	....[1] 02 K16
Gas valve 2	36	02	....[1] 02 K16
Ionisation	11	01	Flat-type plug 6.3 x 0.8 mm

[1] IPCD terminal 3623... / Screw terminal 3611...

Specifications

Nominal voltage	230 V AC - 15 % to 240 V AC + 6 %
Frequency	50 Hz
Performance rating	approx. 5 VA
Internal fuse	(not replaceable)
Back-up fuse	max. 6 A slow-blow or 10 A quick-acting
Switching capacity:	
Fault signal	max. 1 A (with external fault signal)
Ignition	max. 1 A
Ignition gas valve	max. 1 A
Main gas valve	max. 1 A (with operating signal)
LP gas valve	max. 1 A
Total switching capacity	max. 2 A
Flame detector	Ionisation
Ionisation current / operation	6 - 10 µA
Switch-off sensitivity	<1 µA (≥ 0.5 µA)
Short-circuit current limitation	approx. 100 µA
Unlock facility	Remote unlock
Degree of protection	IP 20 - IP 40 must be ensured by installation
Ambient temperature	0 to 60 °C
Connectivity	Rast 5, encoded
Protective grounding terminal	Separate protective ground conductor
Weight	0.35 kg
Exhaust gas sensor	Not contained in scope of supply
Nominal resistance	at 25 °C approx. 1 MΩ
Switch-off resistance	at 65 °C approx. 150 kΩ
Switch-on resistance	at 55 °C approx. 230 kΩ
Ignition	External ignition source
Order data	Type / Order No.
Automatic gas burner control	DGAI. 69F as per spec.
Connectors	Not contained in scope of supply. Connection can only be performed using RAST5 connectors, row 36... encoded.
Manufacturer:	Lumberg GmbH & Co. D-58569 Schalksmühle

Old documentation - Only for your information!
Product is not available anymore!

We reserve the right to make any changes in the interest of technical progress.

Head Offices and Factory
Karl Dungs GmbH & Co. KG
Siemensstraße 6-10
D-73660 Urbach, Germany
Telephone +49 (0)7181-804-0
Fax +49 (0)7181-804-166

Postal address
Karl Dungs GmbH & Co. KG
Postfach 12 29
D-73602 Schorndorf, Germany
e-mail info@dungs.com
Internet www.dungs.com