SIEMENS

7130



Oil Burner Controls

LMO14...
LMO24...
LMO44...

Microcontroller-based oil burner controls for the startup, supervision and control of forced draft oil burners in intermittent operation. Maximum oil throughput up to 30 kg/h, also above 30 kg/h on some versions.

The LMO14, LMO24, LMO44 and this Data Sheet are intended for use by OEMs which integrate the burner controls in their products.

Use, features

Use

The LMO are designed for the startup and supervision of 1- or 2-stage forced draft oil burners in intermittent operation. Yellow-burning flames are supervised with photo resistive detectors QRB1 / QRB3 or yellow flame detector QRB4, blue-burning flames with blue flame detector QRC1. In terms of housing dimensions, connection technology, and flame detectors, LMOs are identical to LOA burner controls.

- Applications in accordance with EN 267: Automatic forced draft burners for liquid fuels
- Type-tested and approved in accordance with DIN EN 298

Features

- LMO44 for use with stationary direct-fired air heaters
- Undervoltage detection
- Electrical remote reset
- Bridging contact for oil preheater
- Monitoring of time for oil preheater
- Accurate and reproducible control sequence thanks to digital signal handling
- Controlled intermittent operation after 24 hours of continuous operation
- Restart limitation
- Multicolor indication of fault status and operational status messages

ПРОМЭЛЕКТРОНИКА / sales@prom-elec.com

Supplementary documentation

Product type	Product name	Type of documentation	Documentation number
LMO	Oil burner control	Environmental declaration	E7130 *)
ACS410	PC software	Software documentation	J7352
OCI400	Optical interface	Data sheet	N7614
QRB1 / QRB3	Photoresistive detector	Data sheet	N7714
QRB4	Yellow-flame detector	Data sheet	N7720
QRC1	Blue-flame detector	Data sheet	N7716

*) On request

Warning notes



To avoid injury to persons, damage to property or the environment, the following warning notes must be observed!

Do not open, interfere with or modify the unit!

- All activities (mounting, installation and service work, etc.) must be performed by qualified staff
- Before making any wiring changes in the connection area, completely isolate the plant from mains supply (all-polar disconnection). Ensure that the plant cannot be inadvertently switched on again and that it is indeed dead. If not observed, there is a risk of electric shock hazard
- Ensure protection against electric shock hazard by providing adequate protection for the burner control's connection terminals. If this is not observed, there is a risk of electric shock
- Each time work has been carried out (mounting, installation, service work, etc.), check to ensure that wiring is in an orderly state and make the safety checks as described in «Commissioning notes». If not observed, there is a risk of impairment of safety functions and of electric shock hazard
- Press the lockout reset button / operation button or the AGK20 lockout reset button extension only manually (applying a force of no more than 10 N) without using any tools or pointed objects. If not observed, there is a risk of impairment of safety functions and of electric shock hazard
- The LMO must not be put into operation following impact or shock; even if it does not exhibit any visible damage, its safety functions may be impaired.
- If not observed, there is a risk of impairment of safety functions and of electric shock hazard
- Risk of damage to the switching contacts!
  If the external primary fuse (Si) is blown due to overload or short-circuit at the terminals, the LMO must be replaced.



- When replacing LOA26 or LOA36 oil burner controls, any ARK21 remote lockout reset modules or similar modules installed in the burner or boiler must be removed. If this is not observed, there is a risk of loss of safety functions and a risk of electric shock

Mounting notes

Ensure that the relevant national safety regulations are complied with.

Installation notes

- Always run the high-voltage ignition cables separately, keeping as much distance as possible from the LMO and other cables
- Install switches, fuses, earthing, etc., in compliance with local regulations
- Ensure that the maximum permissible current load is not exceeded; refer to chapter ‘Technical data’
- Do not feed external mains voltage to the control outputs of the unit. When testing the functions of the burner components controlled by the LMO (fuel valves or similar), the LMO must not be connected
- Do not mix up live and neutral conductors

Electrical connection of the flame detectors

It is important to achieve practically disturbance- and loss-free signal transmission:

- Never run the detector cable together with other cables
  – Line capacitance reduces the magnitude of the flame signal
  – Use a separate cable
- Observe the permissible detector cable lengths; refer to chapter ‘Technical data’
- Earth the burner in compliance with the relevant regulations; earthing the boiler alone does not suffice

Commissioning notes

When commissioning the plant or when doing maintenance work, make the following safety checks:

	Safety check	Anticipated response
a)	Burner startup with flame detector darkened	Non-alterable lockout at the end of the safety time (TSA)
b)	Burner startup with flame detector exposed to extraneous light	Non-alterable lockout within 40 seconds
c)	Burner operation with simulated loss of flame; for that purpose, darken the flame detector during operation and maintain that state	Restart followed by the non-volatile lockout at the end of safety time (TSA)

Applied directives:

- Low-voltage directive 2014/35/EC
- Directive for pressure devices 2014/68/EC
- Electromagnetic compatibility EMC (immunity) *) 2014/30/EC

*) The compliance with EMC emission requirements must be checked after the burner control is installed in equipment

Compliance with the regulations of the applied directives is verified by the adherence to the following standards / regulations:

- Automatic burner control systems for burners and appliances burning gaseous or liquid fuels — DIN EN 298
- Safety and control devices for burners and appliances burning gaseous and/or liquid fuels — General requirements — DIN EN 13611
- Automatic electrical controls for household and similar use Part 2-5: Particular requirements for automatic electrical burner control systems — DIN EN 60730-2-5

The relevant valid edition of the standards can be found in the declaration of conformity!

Note on **DIN EN 60335-2-102**
Household and similar electrical appliances - Safety
Part 2-102: Particular requirements for gas, oil, and solid-fuel burning appliances having electrical connections. The electrical connections of the LMO and the AGK11 plug-in base comply with the requirements of EN 60335-2-102.

EAC Conformity mark (Eurasian Conformity mark)

UKCA conformity mark (UK compliance)

China RoHS
Hazardous substances table:
http://www.siemens.com/download?A6V10883536

Life cycle

The LMO has a designed lifetime* of 250,000 burner startup cycles which, under normal operating conditions in heating mode, corresponds to approx. 10 years of service (starting from the date of manufacture on the type label). This lifetime is based on the endurance tests in the standard EN 298. A summary of the conditions has been published by the European Control Manufacturers Association (Afecor) (www.afecor.org).

The designed lifetime is based on use of the LMO according to the data sheet. After reaching the designed lifetime in terms of the number of burner cycles, or after the corresponding usage time, the LMO must be replaced by authorized personnel.

* The designed lifetime is not the warranty time specified in the Terms of Delivery

Disposal notes

The LMO contains electrical and electronic components and must not be disposed of together with domestic waste. Local and currently valid legislation must be observed.

Mechanical design

The housing is made of impact-proof, heat-resistant and flame-retarding plastic. The housing features a plug-in design and engages audibly into the AGK11 plug-in base. The LMO is made of black plastic.

The housing accommodates the

- microcontroller for the control sequence and the print relays for load control
- electronic flame signal amplifier
- The lockout reset button with its integrated 3-color signal lamp (LED) for operating status and fault status messages and the socket for connecting the OCI400 optical interface or the AGK20 lockout reset button extension

Indication and diagnostics

- Multicolor indication of operational status and fault status messages
- Operating status messages, fault status messages, and service information are transmitted via a unidirectional interface (UDS) in diagnostic mode. An OCI400 optical interface is used for this purpose and is plugged onto the lockout reset button with integrated LED signal lamp. The OCI400 optical interface then transmits the information to the ACS410 PC software or to flue gas analyzers from various manufacturers

Type summary

Article no.	Type reference	Mains voltage	Fuel valve stages	Burner capacity	[1])	Remote reset	Times						Comparable type of Oil burner control LOA [4])
							tw max.	t1 / t1´ min.	TSA max.	t3 min.	t3n max.	t4 min.	
Standard versions													
BPZ:LMO14.111C2	LMO14.111C2	AC 230 V	1	<30 kg/h	•	•	2,5 s	15 / 16 s	10 s	15 s	10 s	---	LOA24.171B27 LOA26.171B27 [2]) LOA36.171A27 [2])
BPZ:LMO14.113C2	LMO14.113C2	AC 230 V	1	<30 kg/h	•	•	2,5 s	15 / 16 s	10 s	15 s	3 s	---	LOA24.173A27 [3])
BPZ:LMO24.111C2	LMO24.111C2	AC 230 V	2	<30 kg/h	•	•	2,5 s	15 / 16 s	10 s	15 s	10 s	15 s	LOA24.171B27 LOA26.171B27 [2]) LOA36.171A27 [2])
Suitable for flash-steam generators													
BPZ:LMO24.111C1	LMO24.111C1	AC 120 V	2	<30 kg/h	•	•	2,5 s	15 / 16 s	10 s	15 s	10 s	15 s	LOA24.171B17
BPZ:LMO24.011C2	LMO24.011C2	AC 230 V	2	<30 kg/h	•	•	2,5 s	5 / 6 s	10 s	5 s	10 s	15 s	LOA24.571C27
Suitable for use with air heaters (WLE)													
BPZ:LMO24.255C2	LMO24.255C2	AC 230 V	2	< / >30 kg/h	•	•	2,5 s	25 / 26 s	5 s	25 s	5 s	15 s	---
BPZ:LMO44.255C2	LMO44.255C2	AC 230 V	2	< / >30 kg/h	•	•	2,5 s	25 / 26 s	5 s	25 s	5 s	5 s	LOA44.252A27

Legend

TSA Ignition safety time
tw Waiting time
t1 Prepurge time
t1´ Purge time
t3 Preignition time
t3n Postignition time
t4 Interval from flame signal to release of fuel valve 2 (BV2)
[1]) Bridging contact for oil preheater
[2]) No actuator (SA) function
[3]) In case of replacement, the ignition transformer (Z) must be rewired from terminal 7 (LOA oil burner control) to terminal 6 (LMO)
[4]) The LMO is suitable for replacing the respective equivalent types, subject to compliance with the relevant data sheets, documentation, and specifications.

Accessories (must be ordered separately)

Connection accessories for small burner controls

Plug-in base **AGK11**
Article no.: **BPZ:AGK11**
To connect the small-capacity burner controls to the burner plant.
See data sheet N7201.



Cable holders **AGK66**
Article no.: **BPZ:AGK66**
For plug-in base AGK11.
See data sheet N7201.



Cable gland holder **AGK65**
Article no.: **BPZ:AGK65**
- Cable gland holder for AGK11 plug-in base
- Pg11

See data sheet N7201.



Cable gland holder **AGK65.1**
Article no.: **BPZ:AGK65.1**
- Cable gland holder for AGK11 plug-in base
- M16 x 1.5

See data sheet N7201.



Cable strain relief elements **AGK67**
Article no.: **BPZ:AGK67**
For plug-in base AGK11.
See data sheet N7201.



Accessories (must be ordered separately) (cont'd)

Flame detectors

Photo resistive detectors **QRB1** (for replacement units only)
See data sheet N7714



Photo resistive detectors **QRB3**
See data sheet N7714.

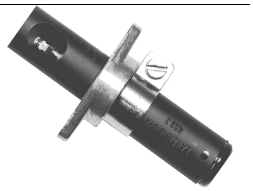

Yellow flame detector **QRB4**
See data sheet N7720.



Blue-flame detectors **QRC1**
See data sheet N7716.

Frontal illumination:



Lateral illumination:



Service tools

Optical interface **OCI400**
Article no.: **BPZ:OCI400**

- Optical interface between burner control and PC
- Facilitates viewing and recording setting parameters on site in connection with the ACS410 PC software

See data sheet N7614.



PC software **ACS410**
Article no.: **BPZ:ACS410**
PC software for setting the parameters and for visualizing the burner controls.
See software documentation J7352.



Others

Extension of lockout reset button **AGK20**
Refer to chapter 'Dimensions'.



Technical data

General unit data

Mains voltage	AC 230 V +10 % / -15 % AC 120 V +10 % / -15 %
Mains frequency	50...60 Hz ±6 %
External primary fuse (Si)	6.3 A (slow)



Caution!
Risk of damage to the switching contacts!
If the external primary fuse (Si) is blown due to overload or short-circuit at the terminals, the LMO must be replaced.

Power consumption	12 VA
Perm. mounting orientation	Optional
Weight	Approx. 200 g
Dimensions	Refer to chapter *Dimensions*
Safety class	I (LMO with AGK11 plug-in base)
Degree of protection	IP40 (to be ensured through mounting)



Note
The burner or boiler manufacturer must ensure degree of protection IP40 through adequate installation of the LMO.

Creepage distances and air gaps	• Overvoltage category III • Rated surge voltage 4 kV at 230 V AC • Pollution degree 2 • Up to 2,000 m above sea level
Cable lengths	
• QRB1/QRB3 photoresistive detector	Max. 10 m at 100 pF/m (laid separately)
• QRB4 yellow-flame detector	Max. 3 m at 100 pF/m (laid separately)
• QRC1 blue-flame detector	Max. 10 m at 100 pF/m (laid separately)
Detector cable laid separately	Max. 10 m
Remote reset laid separately	Max. 20 m

Perm. current at cosφ ≥ 0.6	**LMO14**	**LMO24**	**LMO44**
Terminal 1	Max. 5 A	Max. 5 A	Max. 5 A
Terminals 3 and 8	Max. 3 A	Max. 3 A	Max. 3 A
Terminals 4 and 5	Max. 1 A	Max. 1 A	Max. 1 A
Terminal 6	Max. 1 A	Max. 2 A	Max. 2 A
Terminal 10	Max. 1 A	Max. 1 A	Max. 1 A

Technical data (cont´d)

Environmental conditions	**Storage**	EN 60721-3-1:1997
	Climatic conditions	Class 1K3
	Mechanical conditions	Class 1M2
	Temperature range	-20...+60 °C
	Humidity	<95 % r.h.
	Transport	EN 60721-3-2:1997
	Climatic conditions	Class 2K2
	Mechanical conditions	Class 2M2
	Temperature range	-20...+60 °C
	Humidity	<95 % r.h.
	Operation	EN 60721-3-3:1995+A2:1997
	Climatic conditions	Class 3K3
	Mechanical conditions	Class 3M3
	Temperature range	
	• LMO14 / LMO24	-5...+60 °C
	• LMO44	-20...+60 °C
	Humidity	<95 % r.h.
	Installation altitude	Max. 2,000 m above sea level



Attention!
Condensation, formation of ice and ingress of water are not permitted! If this is not observed, there is a risk of loss of safety functions and a risk of electric shock.

Technical data (cont´d)

Flame supervision with QRB1/QRB3 photoresistive detector, QRB4 yellow-flame detector, and QRC1 blue-flame detector

	Detector current required (with flame)	Perm. detector current (without flame)	Possible detector current with flame (typically)
QRB1 [1])	Min. 45 µA	Max. 5,5 µA	100 µA
QRB3 [1])	Min. 45 µA	Max. 5,5 µA	100 µA
QRB4 [1])	Min. 45 µA	Max. 5,5 µA	70 µA
QRC1 [1])	Min. 45 µA	Max. 5,5 µA	70 µA

[1]) The values given in the table above only apply under the following conditions:
- Mains voltage depending on execution AC 120 V or AC 230 V
- Ambient temperature 23 °C

Green signal lamp (LED) for indication of operating state

	Detector current in operation: • Flame signal instable • - Green signal lamp (LED) flashing	Detector current in operation: • Flame signal stable • Green signal lamp (LED) steady on
QRB1 [1])	<45 µA	>45 µA
QRB3 [1])	<45 µA	>45 µA
QRB4 [1])	<45 µA	>45 µA
QRC1 [1])	<45 µA	>45 µA

[1]) The values given in the table above only apply under the following conditions:
- Mains voltage depending on execution AC 120 V or AC 230 V
- Ambient temperature 23 °C

Measuring circuit for detector current

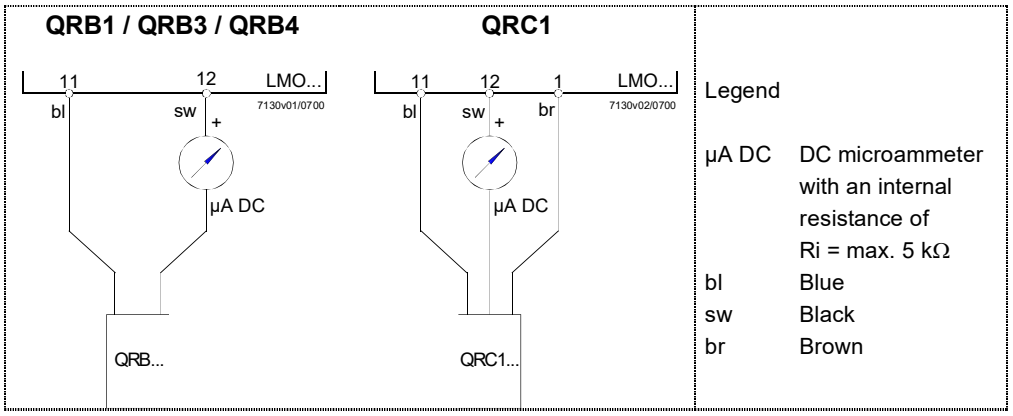

As an alternative to detector current measurement, the OCI400 optical interface with ACS410 PC software can be used. In that case, the DC microammeter is not required.

☞ Note!
Connection of the cables for the QRB4 yellow-flame detector
Blue cable from the QRB4 yellow-flame detector to terminal 11. Black cable from the QRB4 yellow-flame detector to terminal 12. Otherwise, the QRB4 yellow-flame detector will not function.

Function

Preconditions for startup

- The LMO is reset
- Reset button «EK1» or «EK2» not used
- All contacts in the line are closed, heat demand
- No undervoltage
- The flame detector is darkened and there is no extraneous light

Undervoltage

- Safety shutdown from the operating position takes place should mains voltage drop below about AC 165 V (with U_N = AC 230 V) or AC 75 V (with U_N = AC 120 V)
- Restart is initiated when mains voltage exceeds about AC 175 V (with U_N = AC 230 V) or AC 95 V (with U_N = AC 120 V)

Time supervision oil preheater

If the oil preheater's release contact does not close within 10 minutes, a non-alterable lockout takes place.

Controlled intermittent operation

After no more than 24 hours of continuous operation, the LMO initiates an automatic controlled shutdown followed by a restart.

Control sequence in the event of fault

If a non-alterable lockout occurs, the outputs for the fuel valves, the burner motor and the ignition equipment are always immediately deactivated (<1 second). In the event of a non-volatile lockout, the LMO remains locked and the signal lamp (LED) lights up red permanently. The LMO can then be reset immediately. This state is also maintained in the case of mains failure.

Cause	Response
Mains failure	Restart
Voltage below undervoltage threshold	Safety shutdown, followed by restart
Extraneous light during prepurge time (t1), 5 s before fuel valve (BV1) release	Non-alterable lockout at the end of the prepurge time (t1)
Extraneous light during waiting time (tw)	Start prevention, a non-alterable lockout occurs after a maximum of 40 seconds
No flame at the end of safety time (TSA)	Non-volatile lockout at the end of the safety time (TSA), flash code 2; refer to chapter 'Program sequence'
Loss of flame during operation	Maximum of 3 restarts, then a non-volatile lockout occurs
Oil preheater's release contact does not close within 10 minutes	Non-alterable lockout

Resetting the LMO

After a non-alterable lockout, a reset can be carried out immediately. Press and hold the lockout reset button for about 1 second (<3 seconds). The LMO can be reset only when all contacts in the line are closed and there is no undervoltage.

Ignition program with LMO14.11**3**x2 and LMO24.11**3**x2

If the flame is lost during the safety time (TSA), the burner will be reignited before the end of the safety time (TSA). This means that several ignition attempts can be made within the safety time (TSA); refer to chapter 'Program sequence'.

Restart limitation

If the flame is lost during operation, a maximum of 3 restarts can be performed. If the flame is lost for the fourth time during operation, a non-volatile lockout will be initiated. The restart counter is restarted each time a controlled startup by the control thermostat or pressurestat (R) takes place.

Operation, display, diagnostics

Operation



Lockout reset button «EK» is the key operating element for resetting the burner control and for activating / deactivating the diagnostic functions.

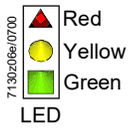

The multicolor signal lamp (LED) in the lockout reset button is the key indicating element for both visual diagnostics and interface diagnostics.

Both «EK» and LED are located under the transparent cover of the lockout reset button.

There are 2 diagnostic choices:

1. Visual diagnostics: Operational status indication or diagnostics of the cause of fault.
2. Interface diagnostics: Using the OCI400 optical interface and the ACS410 PC software, or flue gas analyzers from various manufacturers

Visual diagnostics:
In normal operation, the different operating states are indicated in the form of color codes according to the color code table given below.

Operational status indication

During startup, status indication takes place according to the following table:

Color code table for multicolor signal lamp (LED)

Status	Color code	Color
Waiting time «tw», other waiting states	○.....	Off
Oil preheater on	●.....	Yellow
Ignition phase, ignition controlled	○●○●○●○●○●○	Flashing yellow
Operation, flame o.k.	■.....	Green
Operation, flame not o.k. (when detector current drops below the recommended level for reliable operation)	○■○■○■○■○■○	Flashing green
Extraneous light on burner startup	■▲■▲■▲■▲■▲■	Green-red
Undervoltage	●▲●▲●▲●▲●▲●▲	Yellow-red
Fault, alarm	▲.....	Red
Fault code output; refer to ‘Fault code table’	○▲○▲○▲○▲○▲○	Flashing red
Interface diagnostics	▲▲▲▲▲▲▲▲▲▲▲	Red flicker light

Legend

..... Steady on
○ Off
▲ Red
● Yellow
■ Green

ПРОМЭЛЕКТРОНИКА / sales@prom-elec.com

Diagnostics of the cause of fault

After a non-volatile lockout, the signal lamp (LED) lights up red. In that condition, the visual diagnostics of the cause of fault according to the error code table can be activated by pressing the lockout reset button for more than 3 seconds. Pressing the reset button again for at least 3 seconds, the interface diagnostics will be activated. Interface diagnostics works only if the AGK20 lockout reset button extension is not fitted. If the interface diagnostics have been activated by accident in the operating position – in which case the signal lamp (LED) flickers with a dim red light – they can be deactivated by pressing the lockout reset button again for more than 3 seconds. The instant of switching over is indicated by a yellow light pulse.

The following sequence activates the diagnostics of the cause of fault:

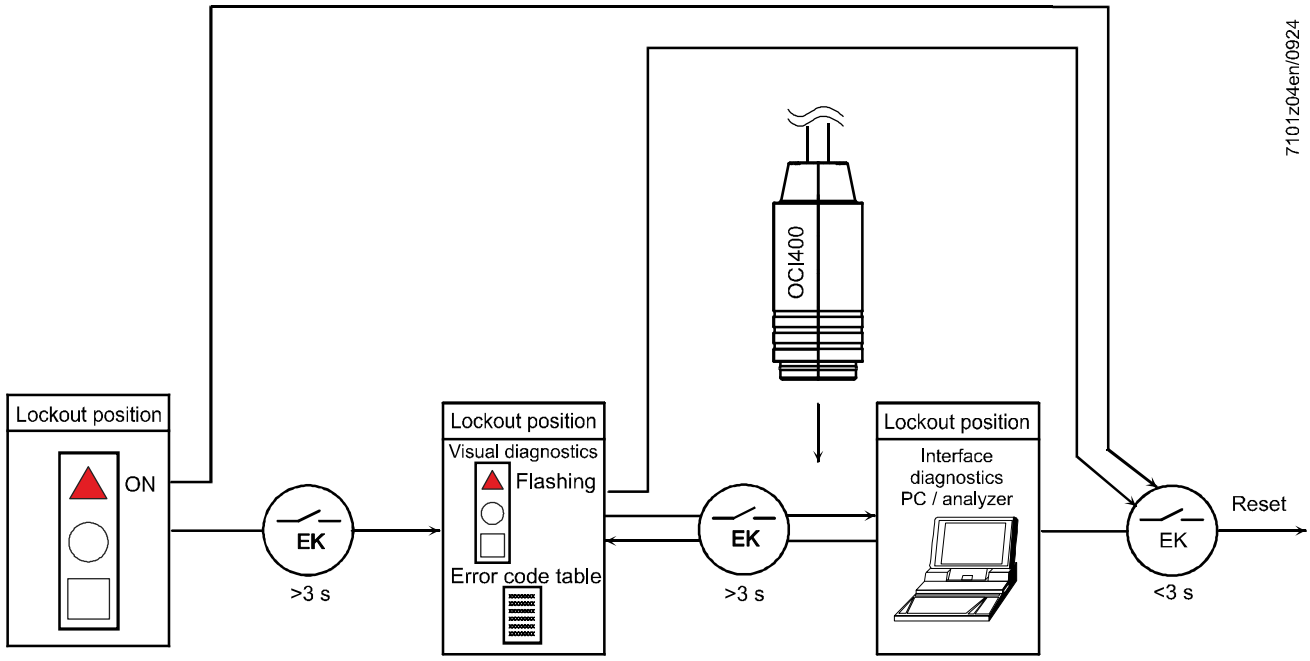

Error code table of multicolor signal lamp (LED)

Red blink code of signal lamp	Alarm at terminal 10	Possible cause
2 blinks	On	No establishment of flame at the end of safety time (TSA) • Faulty or soiled fuel valves • Faulty or soiled flame detector • Poor adjustment of burner, no fuel • Faulty ignition equipment
3 blinks	On	Free
4 blinks	On	Extraneous light on burner startup
5 blinks	On	Free
6 blinks	On	Free
7 blinks	On	Too many losses of flame during operation (restart limitation) • Faulty or soiled fuel valves • Faulty or soiled flame detector • Poor adjustment of burner
8 blinks	On	Time supervision oil preheater
9 blinks	On	Free
10 blinks	Off	Wiring fault or internal fault, fault output contacts, faults that cannot be detected, such as simultaneous faults, other faults

During the time the cause of fault is diagnosed, the control outputs are dead
- The burner remains shut down
- the external fault indicator remains de-energized
- Fault status signal (alarm) at terminal 10, according to the error code table

The diagnostics of the cause of fault is quit and the burner switched on again by resetting the burner control. Press the lockout reset button for about 1 second (<3 seconds).

Connection diagram and internal diagram LMO14

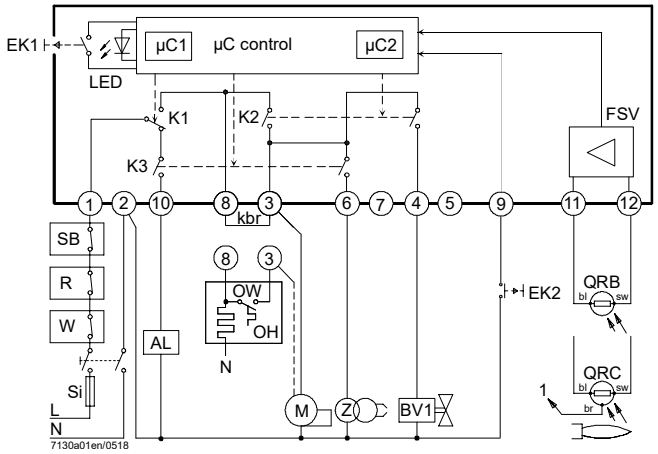

Control sequence LMO14

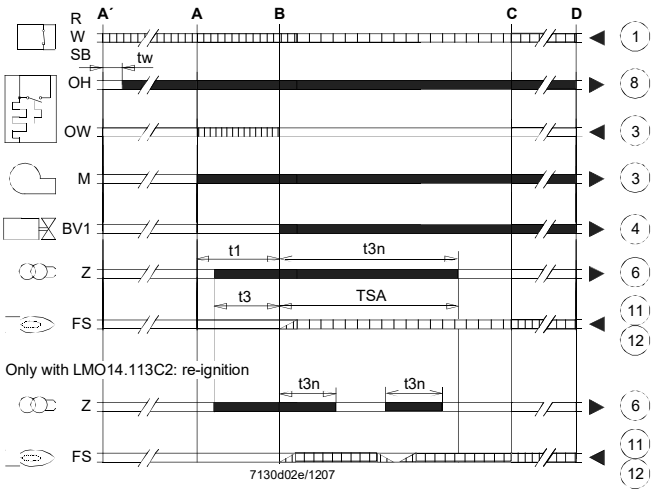

Connection diagram and internal diagram LMO24

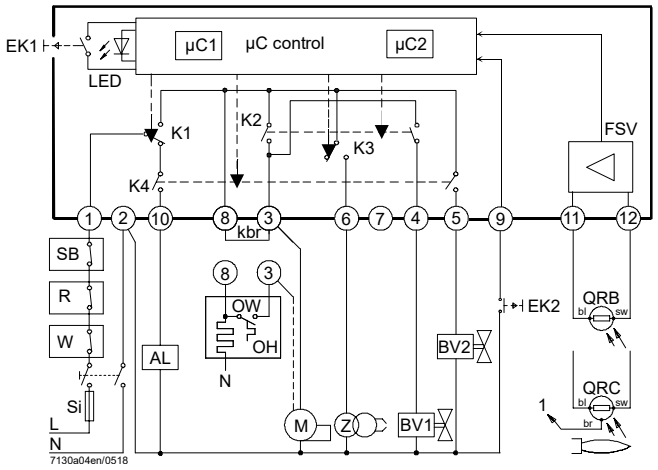

Control sequence LMO24

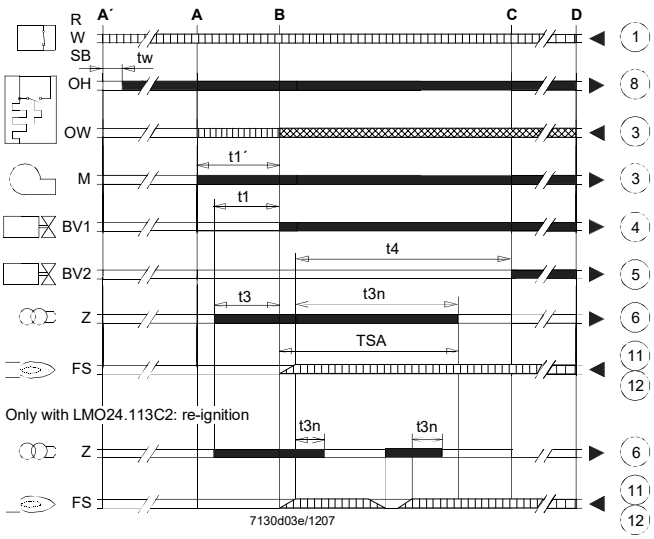

Connection diagram and internal diagram LMO44…

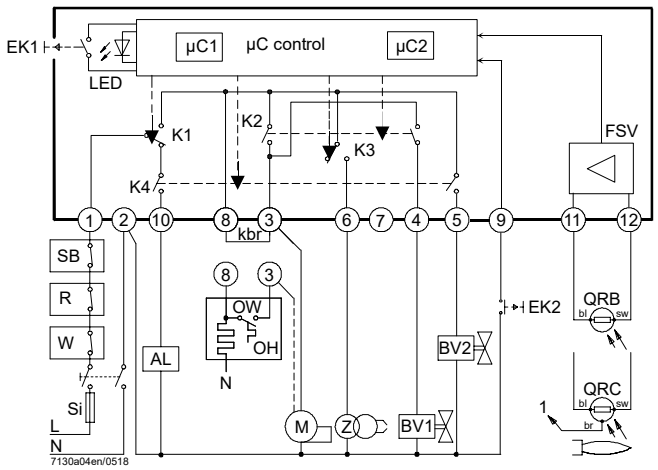

Control sequence LMO44…

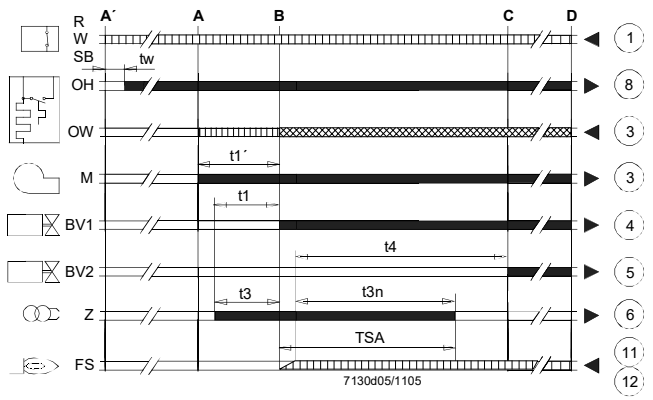

Caution!
Risk of damage to the switching contacts!
If the external primary fuse (Si) is blown due to overload or short-circuit at the terminals, the LMO must be replaced.

Legend

AL	Alarm device
BVx	Fuel valve
EK1	Lockout reset button
EK2	Remote lockout reset button
FS	Flame signal
FSV	Flame signal amplifier
Kx	Contacts of control relay
kbr	Cable link (required only when no oil preheater is used)
LED	3-color signal lamp
M	Burner motor
OW	Release contact of oil preheater
OH	Oil preheater
QRB1	Photo resistive flame detector
QRB3	Photo resistive flame detector
QRB4	Yellow flame detector
QRC1	Blue-flame detector
	bl = blue, br = brown, sw = black
R	Control thermostat or pressurestat
SB	Safety limit thermostat
Si	External primary fuse
W	Limit thermostat or pressure switch
Z	Ignition transformer
TSA	Ignition safety time
tw	Waiting time
t1	Prepurge time
t1´	Purge time
t3	Preignition time
t3n	Postignition time
t4	Interval from flame signal to release of fuel valve 2 (BV2)
A´	Start of startup sequence with burners using an oil preheater (OH)
A	Start of startup sequence with burners using no oil preheater (OH)
B	Time of flame establishment
C	Operating position
D	Controlled shutdown by control thermostat or pressurestat (R)
	Input/output signal 1 (ON)
	Input/output signal 0 (OFF)
	Input permissible signal 1 (ON) or 0 (OFF)
µC1	Microcontroller 1
µC2	Microcontroller 2

Dimensions

Dimensions in mm

LMO



Plug-in base AGK11

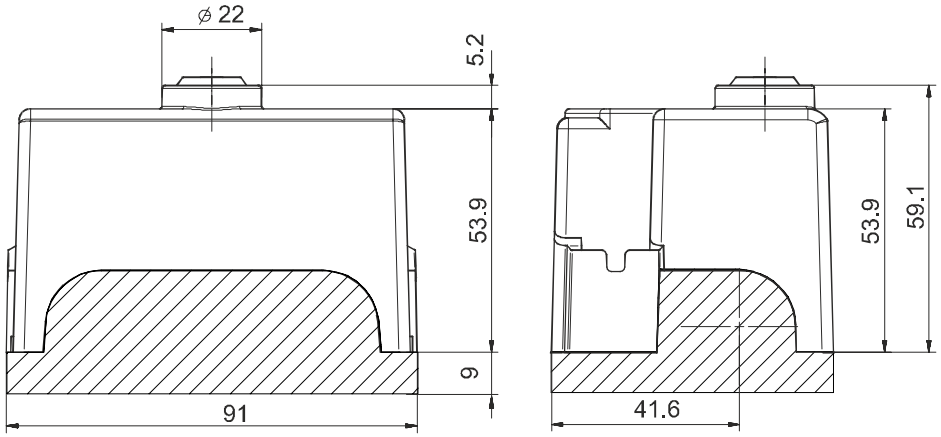

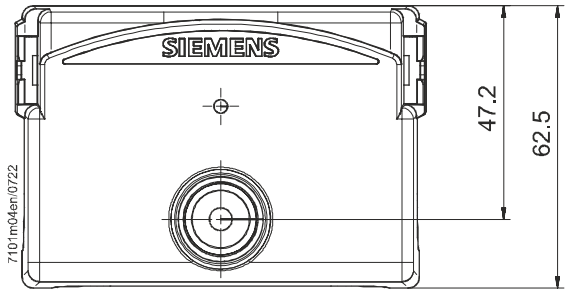

LMO with extension of lockout reset button AGK20

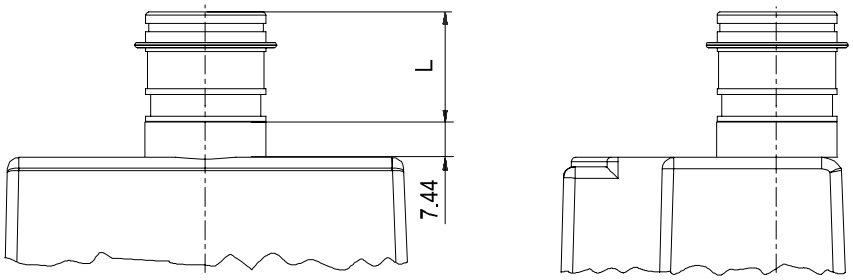

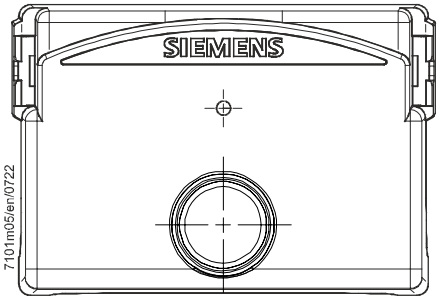

Type (ASN)	Length «L» in mm
AGK20.19	19
AGK20.43	43
AGK20.55	55

© 2025 Siemens AG Smart Infrastructure, Berliner Ring 23, D-76437 Rastatt
Subject to change!