VE3.2 CONTROL BOX

CONTROL BOX FOR FORCED DRAUGHT GAS BURNERS, WITH POWER UP TO 350 KW

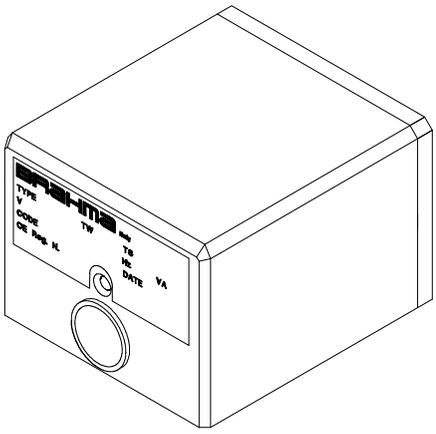

DESCRIPTION

The VE3.2 control box is suitable for forced draught gas burners for civil and industrial applications, with power up to 350KW and one flame level.

According to TÜV Bayern, Monaco, the control is in compliance with the German regulation DIN 4788, part 3, for power up to 350KW. It also obtained the DIN-DVGW 89.09fBN approval, now expired and not renewable.

The “Laboratorio di Macchine e Termotecnica del Centro Studi ed Esperienze” in Rome - Capannelle tested the VE3.2 control box for power up to 350KW, which obtained the certification no. 3704/80/77/12 and the approval of the Ministry of the Interior for fire prevention (circulars no.68 and no.42).

TECHNICAL DATA:

Supply voltage:	220V(-15% +10%)
	50Hz (± 5%)
on request:	110 V
Operating temperature range:	-10℃ +60℃
Protection degree:	IP40
Starting power consumption:	10VA
Operating power consumption:	7VA
Contact rating:	I max.
- fan motor:	4 A
- EV valve:	2 A
- ignition transformer:	2 A
- alarm:	1 A
- regulators (T, PA, PG):	6 A
Times:	
- prepurge time (TV):	30 s
- safety time (TS):	2 s
- drop out time on running flame failure:	<1 s
Flame control:	
- minimum ionization current:	0,5µA
- recommended ionization current:	7µA
- minimum insulation resistance of cable and detection probe to earth:	>50MΩ
- voltage on the detection probe:	300V
Weight including socket:	585 g

FLAME CONTROL

A transformer having one primary and two secondary windings supplies the electronic flame detection circuit at low voltage, and the detection probe with about 300V. This supply system offers the big advantage of having constant ionization values, even if the network is a live-live installation.

To check the efficiency of the flame detection circuit, you have to proceed as follows: connect a low impedance ammeter, as shown in Fig.1; the R1 ... Rn resistors in series have to give the total resistance value of 200MΩ (e.g. 20 resistors of 10MΩ 1/4W 5%). If the control box is supplied with 220V, the measured current value is about 0,5+0,6µA DC, which causes the flame relay to switch on. Lower current values indicate that the circuit is damaged or only partially efficient.

ПРОМЭЛЕКТРОНИКА / sales@prom-elec.com

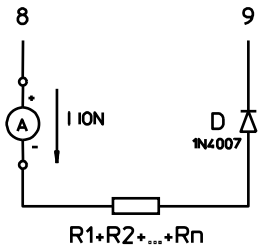

Fig.1

CONSTRUCTION

The components of the control box are fixed on a pressed frame made of thermohardening material, with high dielectric resistance. The plastic casing protects the device from possible damages resulting from crashes, incautious opening, dust and contact with the external environment.
Flexible unipolar conductors of different sizes connect the components of the control, except for the flame detection and prepurge control circuit, which is mounted on a printed circuit.

OVERALL DIMENSIONS

Fig.2 shows the overall dimensions of the control box.

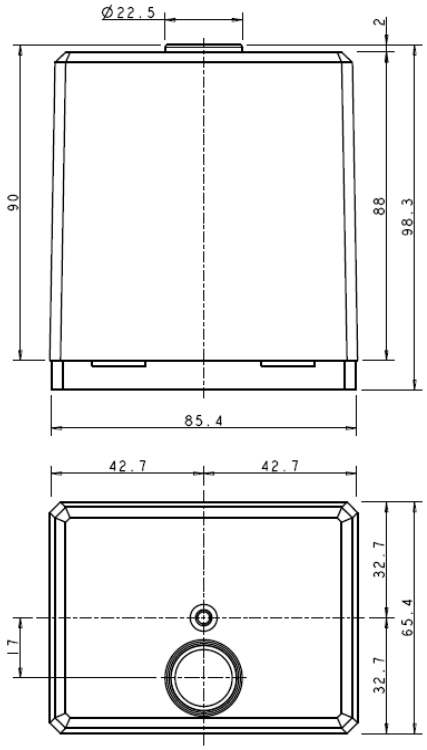

Fig.2

ACCESSORIES

The control is provided with inbuilt reset button and luminous lockout signal.
It can be supplied with kanthal flame detection probes in different executions (see, for instance, Fig. 3).
The casing is arranged for the fitting of core hitches and/or cable holders on its sides; also these accessories can be supplied on request.

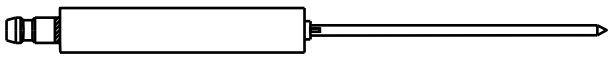

Fig.3

CONNECTION

As regards the interconnection system of this control, several solutions are possible and different types of connecting sockets can be employed (see Fig.4 and Fig.5).
Socket N (code 18210095) differs from socket A B (code 18210130) for the greater number of terminals connecting neutral.

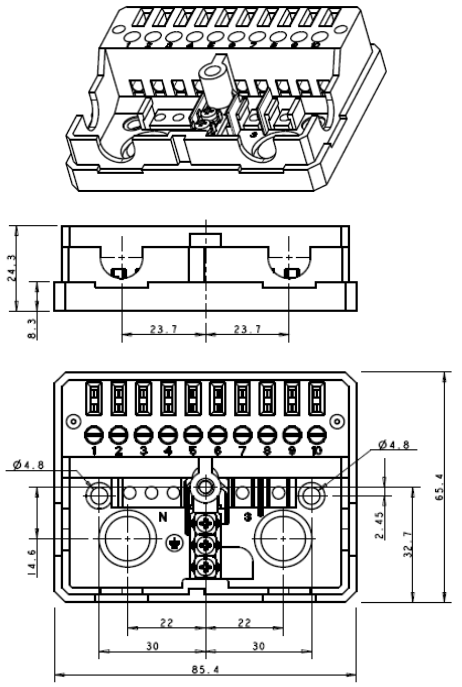

Socket AB
Fig. 4

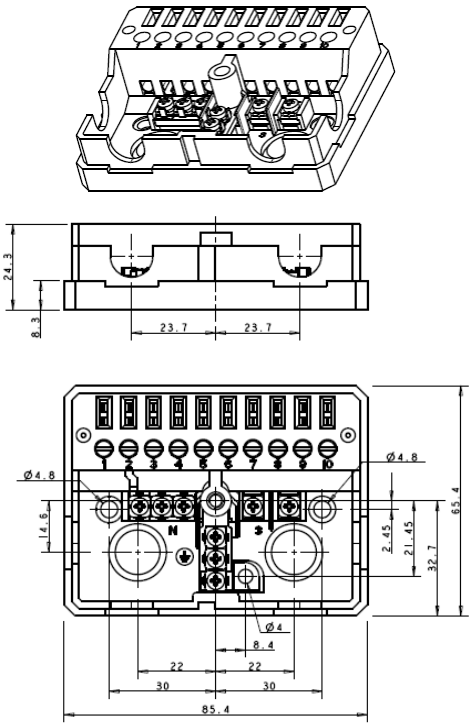

Socket N
Fig.5

DIRECTIONS FOR INSTALLATION

- Control boxes are safety devices and must not be opened; the manufacturer's responsibility and guarantee are invalidated if the control is opened.
- For safety reasons a regulation shutdown must occur every 24 hours.
- The control can be mounted in any position.
- **Live** and **neutral** must be connected correctly; a mistake could cause a dangerous situation.

- Make sure that the discharge of the ignition transformer does not hit the detection probe.
- The earth terminal of the control, the metal frame of the burner, the earth of the ignition transformer and the earth of the main supply must be well connected.
- The connecting wire of the detection probe must not be longer than 20 meters.
- Avoid putting the detection cable close to power or ignition cables.
- Use a heat resistant cable and detection probe, well insulated to the ground and protected against humidity or water in general.
- Always check the control before the first start and also after any replacement or after a long period of non-operation of the system.
- In particular make sure that:
- The connections are corresponding to the scheme below.
- The intervention of limiters and safety devices causes a safety shutdown according to the application.
- The level of the flame signal is sufficiently high.
- A short circuit between detection probe and burner casing does not cause any flame simulation.
- In running state, a leakage of the detection probe to earth causes the interruption of the oil flow and the starting of a new ignition cycle.

THERMAL TIMERS

The safety time is given by a compensated thermal timer. The fixed value of 220 V/20℃ does not vary of more than 25% with voltage (-15% +10%) and temperature (-10 +60℃) variations. The prepurge time is obtained by means of a compensated thermal timer too. This timer, combined with the corresponding electronic circuit, allows a minimum prepurge time of 30 seconds even in case of voltage variations (-20 +10%), ambient temperature variations (-10 +60℃), interruption of the current supply for any time, or frequent and repeated starts of the unit.

OPERATING CYCLE

When thermostats and gas pressure switch are closed, the control box starts up the burner motor. During this period, the device carries out a self-check; if the check is positive and the prepurge stage is more than 30 seconds, the cycle continues and the valve and the ignition transformer are supplied.

If the prepurge stage is less than 30 seconds, the cycle is interrupted and a new one is immediately started.

During the safety time, the flame has to become steady, otherwise the control goes to lockout. Consequently, the valve and the ignition transformer are deenergized, while the lockout signal is supplied.

If the flame extinguishes in normal running state, the gas flow is interrupted and a new cycle is started (cycle repetition).

If a limiter or regulator is opened, the oil flow is immediately stopped and the burner is switched off.

The enclosed cycle diagrams are useful for a better understanding of the operating cycle.

Abnormal operation:

- Air flow failure

In case of failure of the air pressure switch the control proceeds to loockout at the end of the prepurge time.

- Parasitic flame

The presence of a parasitic flame signal at start or during the prepurge time causes a lockout immediately or at the end of the prepurge time.

RESET OF THE CONTROL

To reset the control after a lockout, act on the button after waiting for the restoration of the lockout thermal, which usually takes about 20 seconds.

ELECTRIC SCHEME

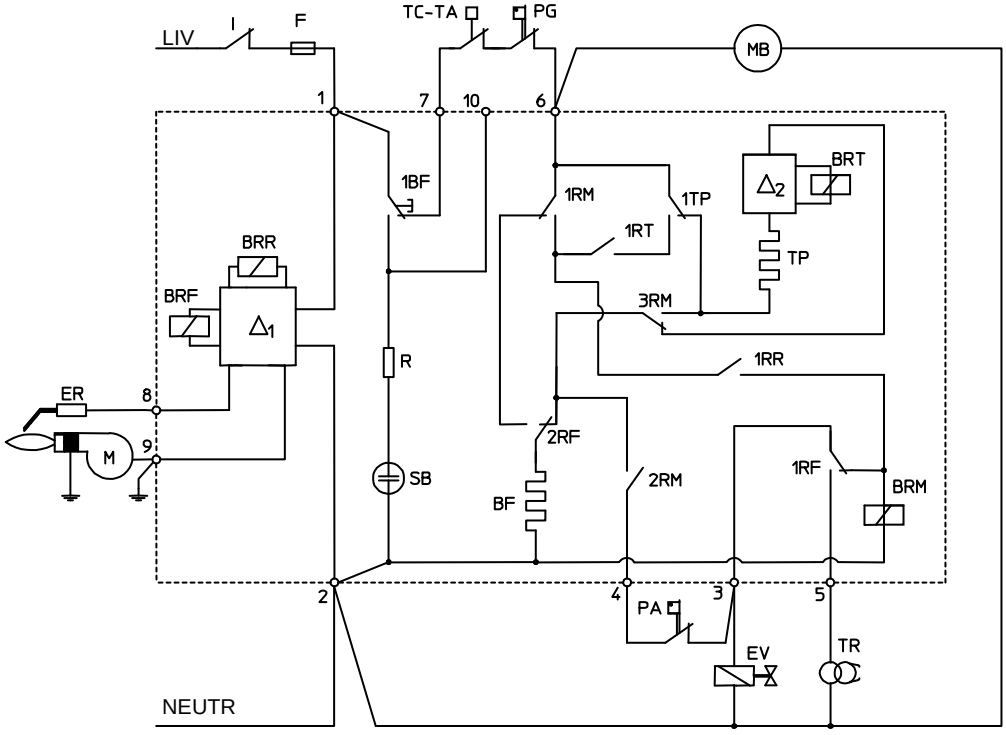

BF	Safety time thermal
BRF	Flame detection realy
BRM	Operation relay
BRR	Cycle repetition relay
BRT	Granted prepurge relay
ER	Detection probe
EV	Gas valve
M	Burner casing
MB	Burner motor
PA	Air pressure switch
PG	Gas pressure switch
TA-TC	Ambient/boiler thermostat
TP	Pre-purge thermal
Δ1	Flame detection circuit
Δ2	Pre-purge relay circuit

CONNECTION DIAGRAM

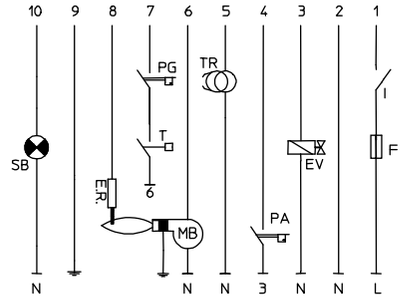

OPERATING CYCLES

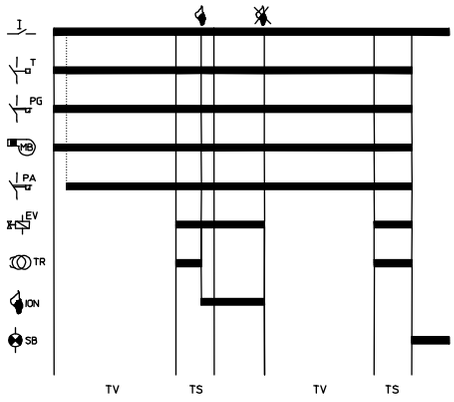

ABNORMAL OPERATION

Air flow failure

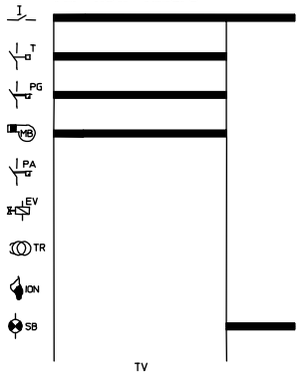

Parasitic flame

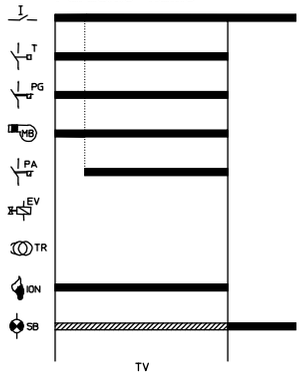

Lockout immediately or at the end of the prepurge time

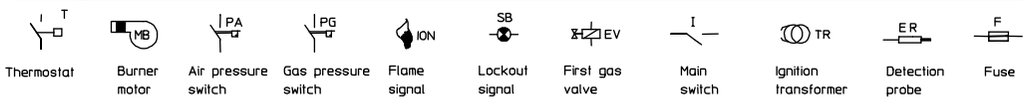

ATTENTION -> Company Brahma S.p.A. takes no responsibility for any damage resulting from Customer's tampering with the device.

BRAHMA S.p.A.
Via del Pontiere, 31
37045 Legnago (VR)
Tel. +39 0442 635211 - Telefax +39 0442 25683
http://www.brahma.it
E-mail : brahma@brahma.it

12/04/26 Subject to amendments without notice

ПРОМЭЛЕКТРОНИКА / sales@prom-elec.com