EUROBOX-EUROOIL SERIES
Type BT…

AUTOMATIC CONTROL DIGITAL SYSTEM FOR 12 OR 24V BURNERS. BT..G FOR GAS APPLICATIONS WITH ELECTRODE, UV PHOTOTUBE OR PHOTODIODE FLAME DETECTION. BT..O FOR OIL APPLICATIONS WITH PHOTOCELL, UV PHOTOTUBE, OR PHOTODIODE FLAME DETECTION.

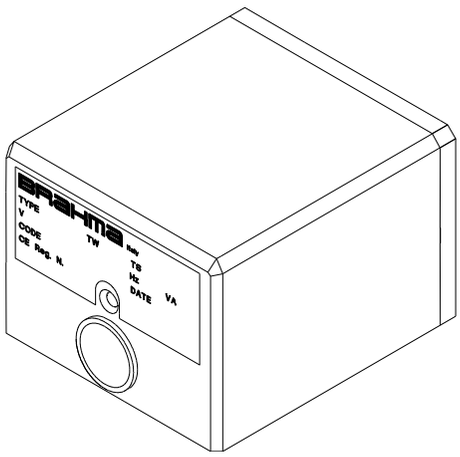

APPLICATION

The devices of this series are designed in $12V_{ac/dc}$ or $24V_{ac/dc}$ and based on microcontroller technology, they are intended for the control of gas, oil or mixed fuel burners for non-permanent operation. This type of devices is provided with non-volatile lockout, i.e. restart from the lockout condition can only be accomplished by manually resetting the unit.

These devices are suitable to equip single or double stage heating burners for various applications. The systems of this series are suitable to be used in accordance with EN 746-2, EN 676, EN 525, EN 1020 and EN 1319 standards or in oil fired in accordance with part 2 of DIN 4794 standard (December 1980 edition related to the hot air generators, only in version TW = 20s and TS = 5s).

FEATURES

The main features of this series are:

- In accordance with the European Gas Appliance Directive 2009/142/EC and 2006/42/EC;
- In accordance with EN298:2003 (European standard for automatic gas burner control systems), EN676:2003 (European standard for automatic forced draught gas burners), DIN 4788 (German standard for fan-assisted burners) and with EN230:2005 (European standard for automatic oli burner control systems);
- Possibility of connecting remote lockout and reset signals;
- Flame detection for gas appliances BT..G, by means of the rectification property of the flame (with electrode) or detecting UV emissions with photo-sensors FD../S BT or UV.. phototube.
- Flame detection for oil appliances BT..O, detecting a yellow flame (visible light with photocell type FC.. or photo-transistor type FT..) or a blue flame (UV emissions with photodiode FD..D BT or UV.. phototube)
- Two independent safety contacts for driving the valve;
- Electrical service life at max. declared loading >250.000 operations;
- Without burner output limits (times and working functions must be suitable to the application in the design stage of the device);
- Precise and repeatable setting times.
- Possibility of messages of lockout type and operation state through a multicoloured LED located on board of the device.
- Multiple ignition attempts. In the standard mode, lockout condition if no flame is detected at the end of safety time. Upon request, with option Ynn, it's possible to set nn number of recycle attempts before lockout.

ПРОМЭЛЕКТРОНИКА / sales@prom-elec.com

Table of the available models:

Models	12V	24V	Single stage	Double stage[1]	Lockout signal	Atmospheric	Fan-assisted	Gas	Oil
BT111G	●		●		●	●		●	
BT112G	●			●		●		●	
BT211G		●	●		●	●		●	
BT212G		●		●		●		●	
BT131G	●		●		●		●	●	
BT131O	●		●		●		●		●
BT132G	●			●			●	●	
BT132O	●			●			●		●
BT231G		●	●		●		●	●	
BT231O		●	●		●		●		●
BT232G		●		●			●	●	
BT232O		●		●			●		●

TECHNICAL DATA

Power supply: $24V_{dc}$ (± 20%)
on request: $12V_{dc}$ (± 20%)
on request *: $24V_{ac}$ (+10/-15%) @ 50-60Hz
on request *: $12V_{ac}$ (+10/-15%) @ 50-60Hz
Maximum Power Consumption: 4VA @$24V_{ac}$ - 8VA @$12V_{ac}$
4W @$24V_{dc}$ - 8W @$12V_{dc}$
Operating temperature: -20 °C ÷ +70 °C
Storage temperature: -40°C ÷ + 85°C
Humidity: 95% massimo a +40 °C
Protection rating (with socket): IP40
Internal fuse: 6,3 A delayed-blow type
External fuse (recommended)[2]: 5 A delayed -blow type
Max. total weight (with socket): About 270 g

(*) freewheeling diode on EV1 output is not installed.

TIMES

Waiting/prepurge time (TW/TP): 0 … 240 s
Safety time (TS) - GAS versions: 2 … 120 s
- OIL versions: 2 … 10 s
Spark ignition time (TSP): (TS-1) s
Response time in case of flame failure (GAS versions): < 1 s
Safety time during operation (OIL versions): < 1 s
Pre-ignition time (opt. Jnn): 1 … 60 s
Post-ignition time (opt. Bnn) 0 … 60s
- only OIL versions:
Post-purge times (opt. P, PT, C, CT): 0 … 1800 s
Inter-waiting or Inter-purge time (opt. Inn): 1 … 240 s
Opening delay of EV2 (opt. Wnn): 1 … 1800 s
Lockout delay due to:
- flame simulation at startup (opt. Knn, GAS): 0 … 60 s
- flame simulation at startup (opt. Knn, OLIO): 5 … 60 s
- failure to close of PA[3] contact (opz. Qnn): 3 … 120 s
- failure to close of TRISC[3] contact (opz. Qnn): 3s… 30min

The times given on the burner control label correspond to the values guaranteed. The actual values differ slightly from the values given, pre-purge and waiting times can be longer and safety time shorter than their nominal values.

Recycles for flame loss (opt. Ynn and Vnn): 0…10
Recycles for air pressure loss (opt. Snn): 0…10
Working range of Revolutions Per Minute (opt. GR): 500...7500
Painting: Upon request

Maximum Power Consumption to stand-by:
- GAS versions: <1,5W @ 24/12 V_{dc} / <4VA @ 24/12 V_{ac}
- OLIO versions: <0,5W @ 24/12 V_{dc} / <1,3VA @ 24/12 V_{ac}

Maximum output contacts rating

Combustion fan [4]	$4A_{dc}$, spunto $12A_{pk}$	$4A_{ac}$ cosφ≥0.6
EV1 valve[4]	$4A_{dc}$, spunto $12A_{pk}$	$4A_{ac}$ cosφ≥0.6
External Ignitor	$4A_{dc}$, spunto $12A_{pk}$	$4A_{ac}$ cosφ≥0.6
EV2 valve[5]:	$1A_{dc}$, spunto $5A_{pk}$	$1A_{ac}$ cosφ≥0.6
Lockout signal[5]:	$1A_{dc}$, spunto $5A_{pk}$	$1A_{ac}$ cosφ≥0.6
With R option:	$5mA_{dc}$	$5mA_{ac}$

Contacts rating P_c=V+EV1+EV2 [4]: $4A_{dc/ac}$

NOTE: Unless otherwise specified, the loads output voltage is the same as voltage power supply.

Minimum input contacts rating

Interruttore generale (I): 10 A
Room thermostat (TA) and Preheater (TRISC): 10 A
Reset, gas (PG) and air (PA) pressure: 5 A

Maximum length of external components cables

Room thermostat: 100 m
Power supply of the device 10 m
Reset – Remote Lockout signal: 20 m
Ignition device (high voltage)**:** 2 m
The rest of the cables (loads power supply cables, gas and air pressure switch cable, preheater cable)**:** 1 m

Maximum cross section of cables[6]: 2,5mm

Remarks

(1) In double stage version is not available the remote lockout signal SB.
(2) The external fuse value must be selected according to the maximum applied load. This value must not anyway exceed the internal fuse value. The sum of the loads, in each operation time, must not exceed 95% of the value of the external fuse.
(3) PA: air pressure switch
TC: pre-heater thermostat.
(4) The sum of the fan and valves loads, in each operation time, must not exceed the maximum contact rating **P_c**. If it exceeds then for fan motor use a remote control switch (contactor).
(5) The output signal of remote lockout is used to drive the second stage EV2. This output can be used to signal the flame presence to a remote device.
(6) Cables connected to NBT base.

Flame monitoring – Gas versions

BTXXXG devices use the rectification property of the flame. An important safety aspect is that the controller is more sensitive to flame at start or during the waiting/pre-purge time (negative differential switching).

Minimum ionization current: 0.5 μA
Upon request: 1.2 μA
Recommended ionization current: 2 ÷ 3 times the minimum one
Minimum insulation resistance of detection electrode and cable to earth: ≥ 50 MΩ
Maximum electrode parasitic capacity : ≤ 1nF
Maximum short-circuit current : <200μA_{ac}

Flame monitoring – Oil versions

On **BTXXXO** devices the flame is detected by a photocell or by a photo-transistor. The following scheme shows the different photocells manufactured by BRAHMA which are classified according to their sensitivity.

Type	*Sensitivity*	*View*
FC7/FC8 red	1,5 ÷ 5,5 lux	Lateral/Frontal
FC7/FC8 blue	1,5 ÷ 3,0 lux	Lateral/Frontal
FC7/FC8 green	3,0 ÷ 5,5 lux	Lateral/Frontal
FC11	1,5 ÷ 6,5 lux	Lateral/Frontal
FC13/FC14 red	1,5 ÷ 6,5 lux	Lateral/Frontal
FC13/FC14 blue	1,5 ÷ 3 lux	Lateral/Frontal

The following table shows the different photo-transistors manufactured by BRAHMA, classified according to their sensitivity.

	LOW	MEDIUM	HIGH
FT11/	V – GREEN	R – RED	A – BLUE
FT13/	V – GREEN	R – RED	A - BLUE

BT..O devices combined to FT…sensors have a minimum threshold higher than 1 lux. For more information, please check datasheet 27754.

Flame monitoring UV type – Gas and Oil versions

With UV option, the device is suited for UV phototube (UV1, UV2, UV3); for more information please check datasheet 4068. These sensors may work with frontal flame view (flame vision right angle line to the flame) and lateral view (flame vision in parallel to the flame).

The FD..BT sensors, with power supply 12V or 24V, by means of a semiconductor sensor, are able to detect the ultraviolet light (UV spectral field from 290nm to 350nm). Model for gas applications is FD../S BT while model for oil blue flame applications is FD..D BT. For more information please see datasheet 30897. The following table shows the various UV sensors classified according to the application and their view.

Type	*View*	*Application*
FD1/S BT	Frontal	GAS
FD2/S BT	Lateral	GAS
FD1D BT	Frontal	OIL
FD2D BT	Lateral	OIL
UV1, UV2, UV3	Frontal / Lateral	GAS/OIL

Connections, overall dimensions and fixing templates are shown in paragraph “Accessories”.

Under and over voltage protection:

In case the power supply voltage is lower than about $13V_{ac/dc}$ (about $7,5V_{ac/dc}$ in the $12V_{ac/dc}$ versions) or higher than about $39V_{ac/dc}$ (about $21V_{ac/dc}$ in the $12V_{ac/dc}$ versions) the controller will go to the safety shutdown. It will restart when the power supply voltage will be higher than about $15V_{ac/dc}$ (about $8,5V_{ac/dc}$ in the $12V_{ac/dc}$ versions) or lower than about $38V_{ac/dc}$ (about $20V_{ac/dc}$ in the $12V_{ac/dc}$ versions).

CONSTRUCTION

The use of an innovative circuit and of surface mounting components has allowed to reduce the dimensions of the controller PCB. The plastic case (and the PCB varnish coating if requested) protect the controller against mechanical damage caused by crash, tempering , dust , and contact with external ambient. A varistor protects the controller from peak tensions on the mains supply due to, for instance, atmospheric discharges such as thunderbolts. An internal accessible fuse protects the controller relays in case of short circuit on the outputs (valves, fan and lockout signal). Finally a resistor in series to the lockout output signal could be mounted, to protect the device from possible inversions of connection of the remote unlock contact.

OVERALL DIMENSIONS

The controllers of the EUROBOX-EUROOIL series BTXXX type can be supplied in different executions, but with the same case. Figure 1 shows the controllers overall dimensions.

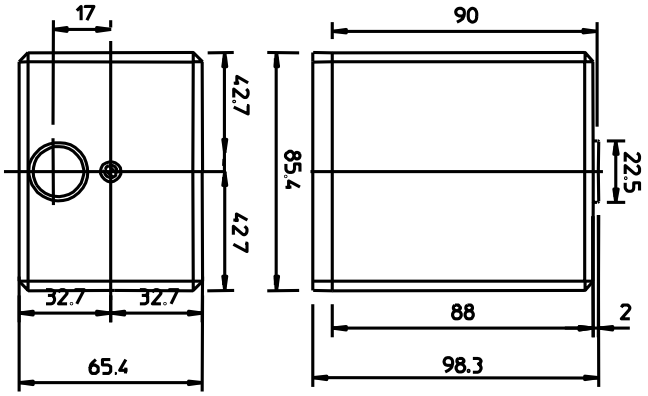

Fig. 1

CONNECTIONS

The accessories as connecting sockets and core hitches are supplied upon request for controller wiring. The following figures show connecting socket type NBT (Fig. 2) and core hitches (Fig. 3).

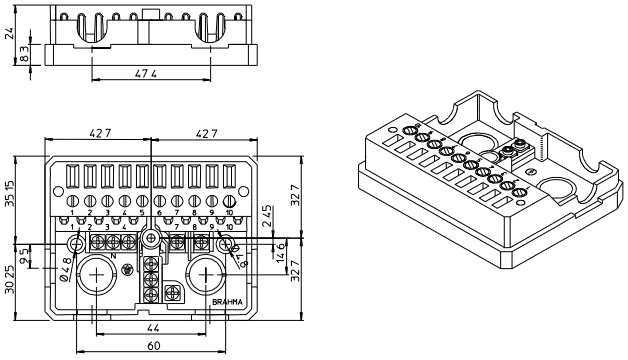

Fig. 2

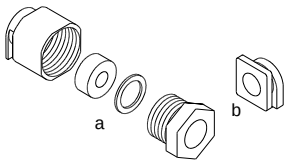

Fig. 3

To order accessories (fig. 2 and 3), see to the following codes:

– socket type NBT code 18210124 (fig. 2);
– core hitches code 18210200 (fig. 3);
– core hitches code 80536550 (fig. 3 b).

Use cables with a maximum cross section of 2.5 mm.

ACCESSORIES

The following directions are useful to choose the most suitable flame detector for the control box and the used application:

- Flame detection in gas appliances, BTXXXG, is based on the rectification principle of the flame and managed by electrodes (fig. 4); technical features in datasheet 4066. In appliances where the temperature is very high and so the detection electrode may be compromised, it’s possible to use sensors FD1/S BT - FD2/S BT (fig. 5) or UV.. sensors (fig. 6).
- For BTXXXO in fuel oil applications, the sensors FD1D BT - FD2D BT (fig. 5) or UV.. sensors (fig. 6) can be used only in blue flame appliances; while photocells FC11, FC13, FC14 (fig. 7 e 8) or FT11, FT13 photo-transistors can be used only in yellow flame appliances.

In case use of UV phototubes or photodiode FD.. position the sensor in the direction of the flame until maximum possible flame signal is obtained. Accessories supplied upon request.

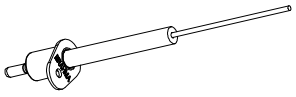

Fig. 4

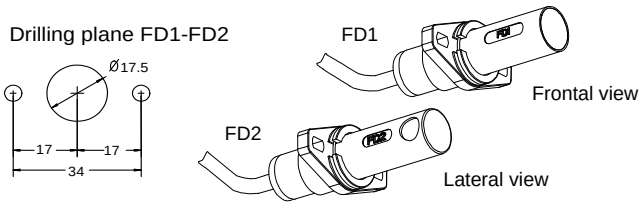

Fig. 5, FD..

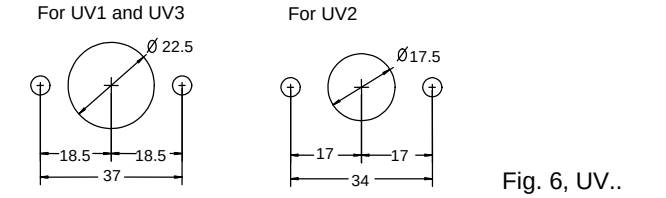

Fig. 6, UV..

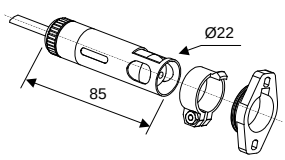

Fig. 6a, UV1

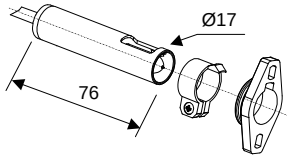

Fig. 6b, UV2

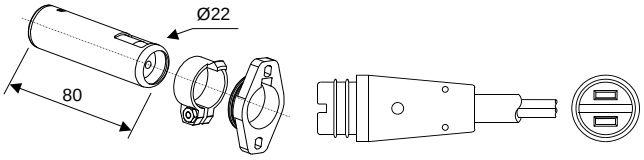

Fig. 6c, UV3

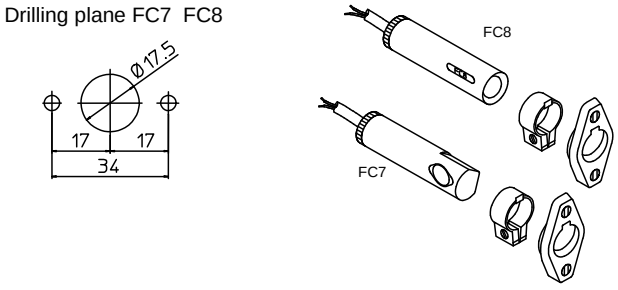

Fig. 7

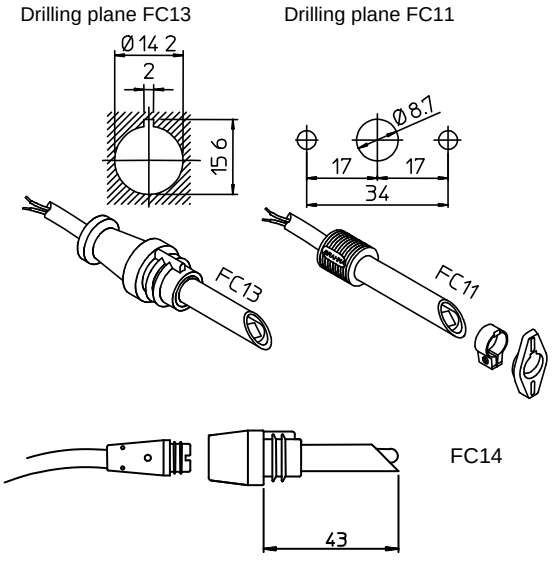

Fig. 8

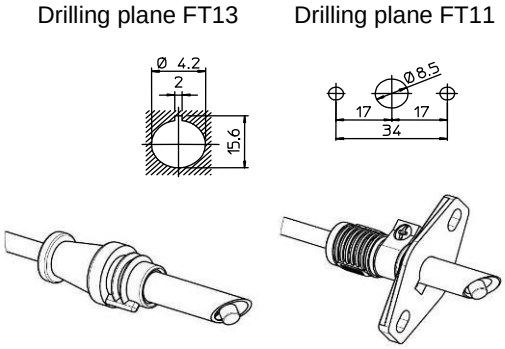

Fig. 9 – Types and fixing systems for FT11 and FT13

INSTALLATION DIRECTIONS

- <u>The controllers are safety devices; guarantee and responsibility of the manufacturer will be debarred if the products are tempered with by the user;</u>
- The system is designed to stay in running position for less than 24h (system for non-permanent operation). Reaching this limit causes a regulation shutdown in order to allow the controller to check its efficiency;
- The controller must be connected and disconnected without power supply;
- The controller can be mounted in any position;
- Avoid exposure to dripping water;
- A ventilated installation ambient and a quite low temperature ensure the longest life of the controller;
- Before installing or replacing the controller make sure that its type, code and times are those required;
- The appliance in which the controllers are installed must provide adequate protection against the risk of electric shock (at least IP20)
- The remote unlock button must be installed in proximity of the system, so that the system can be visible during reset

ELETRICAL INSTALLATION

- The applicable national regulation and European standards (Ex. EN 60335-1 and EN 60335-2-102) related to the electrical safety must be respected;
- In the gas versions the neutral/negative terminal of the power supply must be connected to the metal frame of the burner;
- Observe the phase/positive polarity to terminal 3 and neutral/negative to terminal 4.
- Before starting the system check the wiring carefully. Wrong connections can damage the controller and compromise safety;
- Ensure a good connection between the terminal neutral/negative of the device and ignitor, to the metal frame of the burner;
- Avoid putting the detection cable close to power or ignition cables;
- Avoid using the neutral/negative cable of the signals (thermostat, pressure ...) together with the neutral/negative of the load (ignitor, fan motor ...), to use two or more neutral/negative cables to separate the signals to the loads.
- Use a heat resistant cable and detection electrode well insulated and protected from possible moisture (or water in general);
- Use an ignition cable as short and straight as possible and keep it far from other conductors to reduce the EMC emission (max. length shorter than 2m and insulation voltage >25 kV).
- This controller is provided with internal fuses, but it must be protected by a fuse at least on the phase connection (see technical features).

In case of “partial” short circuit or insufficient insulation between power supply (or detection probe) and neutral/negative terminals, power supply can be reduced till causing lock out of the controller due to impossibility of detecting the flame signal.

CHECKING AT STARTUP

Check the controller before the first start-up and also after every overhaul or a long period of no operation of the system. Before any ignition attempt make sure that the combustion chamber is empty, then make sure that:

- if the starting attempt occurs without fuel supply, the controller locks out at the end of the safety time (TS). In case of one or more recycle attempts (Ynn option), the controller locks out at the end of the last recycle attempt (according to the Ynn option);
- if the fuel flow stops, while the device is in operation state, the power supply to the solenoid valve is interrupted within 1 second and the controller proceeds to lockout after a recycle (or more than one recycle up to max. 10 according to the settings;
- operating times and cycle are in compliance with the ones declared for the used controller type;
- the level of the flame signal is high enough (for flame signal test see figure 9 and 10);
- the ignition electrodes are adjusted in the most stable way for a 2-4 mm air spark gap to ensure a good ignition of the fuel (for more information see the specific technical data of the ignition device);
- the intervention of the regulators, limiters or safety devices causes a shutdown of the controller according to the application type.

GAS FLAME SIGNAL TEST

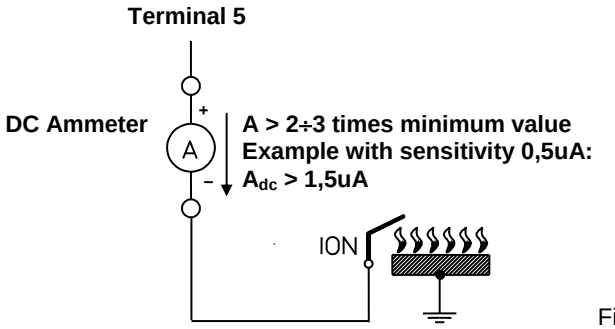

Fig. 10

OIL FLAME SIGNAL TEST

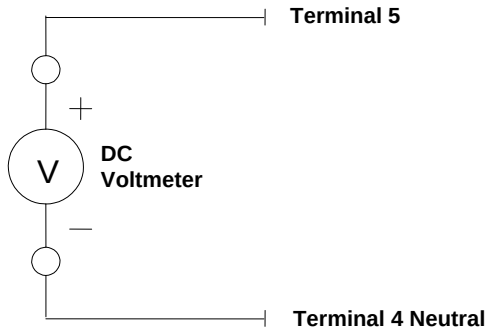

In combination with FC.. and FT.. sensors, V should be ≤ 1,5 V; in combination with FT.. sensors, the maximum signal measured is 0,7 V

Fig. 11

GAS VERSIONS - OPERATION

The following description refers to the standard operation cycle controllers. At every start the controller proceeds to a self-checking of its own components. During waiting time (TW) or pre-purge time (TP) the internal circuit monitors the correct functioning of the flame signal amplifier: A spurious flame signal or a fault in the amplifier which corresponds to the flame condition prevent the controller from starting. In the types provided with fan control, before pre-purge time starts, the controller checks the air pressure switch contacts to ensure a 'no air-flow' condition. Only if the test is positive the pre-purge time (TP) starts due to the commutation of the air pressure switch. At the end of the waiting (TW) or pre-purge time (TP) the EV1 valve and ignition device are energised and the safety time begins (TS). If flame is detected during the safety time the ignition device is de-energised and, in the models where it is provided, the main gas valve EV2 energized. Conversely, if no flame is detected during the safety time then at the end of the same the controller proceeds to lockout, the EV1 valve is closed, the ignition device is de-energised and the lockout signal is activated.
Flame failure during the safety time causes the ignition device to be activated within one second.

The standard conditions for the start-up working cycle are the following:

- Powered device and not in lockout state.
- Heat request (T) in working position.
- Air pressure (PA) in idle position.
- No flame or parasite flame.

The standard conditions for the start-up of pre-purge time are the following:

- Powered device and heat request (T) in working position.
- Air pressure (PA) in working position.
- No flame or parasite flame.

The standard conditions for the start-up of safety time are the following:

- Powered device and heat request (T) in working position.
- Air pressure (PA) in working position.

The standard conditions for reach the working position are the following:

- Powered device and heat request (T) in working position.
- Air pressure (PA) in working position.
- Presence of flame signal.

The device exits the working position due to one or more of the following reasons:

- Unpowered device
- Heat request (T) in idle position.
- Air pressure (PA) in idle position.
- Loss of flame signal.

See cycle diagram to better understand the operation of each controller.

OIL VERSIONS - OPERATION

The following description refers to the standard operation cycle controllers. At every start the controller proceeds to a self-checking of its own components. When the room thermostat is closet the preheter is energized immediately; once the correct oil temperature is obtained the preheater thermostat switches and signals the start of the ignition cycle to the controller: the burner motor and the ignition transformer are energized (Pre-purge time TP and pre-ignition time) and the operation of the flame amplifier is checked. Any fault leading to a spurious flame signal prevents the controller from starting which causes a lockout within 10 seconds. In case the preheater thermostat opens during pre-purge time, the controller deactivates the motor fan and the ignition transformer and proceeds to the waiting position. This condition remains till the preheater thermostat closes again; conversely the controller goes to lockout within 10 minutes. At the end of pre-purge time TP, the safety time begins and the controller energizes the EV1 valve. If no flame is detected within the end of safety time TS, then the controller goes to lockout and de-energizes the motor fan, the ignition transformer and the EV1 valve while the lockout signal is activated. Conversely, at the end of the safety time TS the ignition transformer is deactivated and, in the models where it is provided, the second stage valve EV2 is energized.
Flame failure during the safety time causes the ignition device to be activated within one second.

The standard conditions for the start-up working cycle are the following:
- Powered device and not in lockout state.
- Heat request (T) in working position.
- Pre-heater thermostat (TRISC) in working position.
- No flame or parasite flame.

The standard conditions for the start-up of pre-purge time are the following:
- Powered device and heat request (T) in working position.
- Pre-heater thermostat (TRISC) in working position.
- No flame or parasite flame.

The standard conditions for the start-up of safety time are the following:
- Powered device and heat request (T) in working position.
- Pre-heater thermostat (TRISC) in working position.

The standard conditions for reach the working position are the following:
- Powered device and heat request (T) in working position.
- Pre-heater thermostat (TRISC) in working position.
- Presence of flame signal.

The device goes out to the working position due to one or more of the following reasons:
- Unpowered device
- Heat request (T) in idle position.
- Pre-heater thermostat (TRISC) in idle position.
- Loss of flame signal.

See cycle diagram to better understand the operation of each controller.

OPERATION CYCLE VARIATION

The possible cycle variations of the controllers are as follows:

– *Option 5 ("E"): lockout type*

Standard mode; in order to reset the system the reset button must be pressed till the lockout signal is shut off (manual reset). On request; with E option, the controller can be reset by interrupting and then restoring the power supply. It's not possible to reset the system by shutting off the heating demand device (electrical reset).

– *Option 6 ("A", "B"): ignition mode*

Standard mode; the ignition device output is activated during all safety time TSP=TS-1. On request; the spark can be activated during the safety time TSP=TS-nn (option "Ann") or during all the safety time TSP=TS (option "A"). The spark, with ("Bnn" option) or without ("B" Option) delay, can be deactivated when a flame signal is detected.

– *Option 7 ("W", "Wnn"): opening mode of the second stage valve EV2*

Standard mode; the output of the second stage (or auxiliary device) is activated when a flame signal is detected. On request; the second stage (or auxiliary device) can be activated at the end of safety time TS ("W" Option), or with nn second delay starting from the end of safety time TS ("Wnn" Option).

– *Option 8 ("K", "Knn"): Lockout due to parasite flame*

Standard mode; if a spurious flame is detected at start-up or during waiting/prepurge/preignition time, the device stops the cycle, without lockout (without limit, continuous prepurge stage). On request; the device proceeds to immediate lockout ("K" Option) or with a delay (settable upon request) of nn seconds ("Knn" Option).

– *Option 9 ("Q", "Qnn"): failure or insufficiency of air flow or preheater thermostat failure to close at start-up*

Standard mode; if the device detects no commutation of the air pressure switch or the preheater thermostat (oil versions) during start-up (or waiting/prepurge time), it stops the cycle, without lockout (without limit, countinuos prepurge). On request; the device proceeds to immediate lockout ("Q" Option) or with a delay of nn seconds (settable upon request with "Qnn" Option).

– *Option 10 ("G", "GRnn", "GZ", "GP"): Check of Air pressure switch, minimum Revolutions Per Minute or preheater thermostat*

Standard mode; the device performs the ignition cycle and checks the air pressure switch (PA) or the preheater thermostat (TRISC). On request, with "G" option, the controller starts its ignition cycle without checking the air pressure switch (in the gas versions) or the preheater thermostat (in the oil versions). On request, with "GZ" option, the device performs the ignition cycle with the check of air pressure switch or preheater thermostat only during start-up (without check in working position). On request, with "GP" option, the device (only oil versions) performs the ignition cycle without checking of the preheater thermostat, but with checking of the air pressure switch. When the signal (PA, TRISC, RPM) fails to switch during start-up, the device stops the cycle (or it goes to lockout only in combination with "Q" Option), and this condition can change only with the commutation of the device, with "GP, ""GRnn" and GZ" options, the device proceeds to an immediate safety shut down (or lockout only in combination with "S" Option) due to signal failure (PA, TRISC, RPM) during operation.

– *Option 11 ("S", "Snn"): failure or insufficiency of air flow or preheater thermostat failure to open in running position*

Standard mode; if the device detects a loss of air pressure switch or the preheater thermostat (only oil versions) during the running position, then it stops the cycle, without lockout (without limit, continuous prepurge stage). On request; the device proceeds to immediate lockout ("S" Option) or lockout after "nn" number of events ("Snn" Option).

– *Option 12 ("V", "Vnn"): Flame failure in running position*

Standard mode; recycle without lockout (without limit, continuous prepurge) with flame failure in running position. On request; in case of flame failure in operation, the controller proceeds to lockout immediately (option "V") or after "nn" number of events (option "Vnn").

– *Option 13 ("Ynn", "YRnn"): recycle attempts*

Standard mode; the device proceeds to immediate lockout (without recycle) if the flame isn't detected at the end of safety time. On request, with "Ynn" option, the device proceeds to lockout after "nn" recycle attempts (the "nn" attempts number is settable upon request). On request, with "YRnn" option, the device proceeds to lockout after "nn" recycle attempts (the "nn" attempts number is settable upon request), but with a single restart in case of loss flame during operation (according to EN646 and EN746).

– *Option 14 ("Inn"): inter-waiting or inter-purge time*

Standard mode; without interwaiting/interpurge. On request; with "Inn" option, a waiting or pre-purge time (expressed in seconds) starts after a failed ignition attempt and before the next recycle attempt.

– *Option 15 ("Jnn"): pre-ignition time*

Standard mode; without any pre-ignition (gas versions), with pre-ignition (oil versions, the pre-ignition time coincides with the pre-purge time). On request; the transformer is activated at the end of the waiting/purge time and before the beginning of the safety time (time is settable upon request.

NOTE: in the OIL versions the pre-ignition time coincides with the pre-purge time.

– *Option 16("Pnn", "PTnn", "Cnn", "CTnn"): post-purge time of the main combustion motor fan*

Standard mode; without any post-purge time on the main combustion motor fan output in case of heating demand failure. On request; post-purge (settable upon request) of nn seconds ("Pnn" or "PTnn" Options). With "Pnn" option post-purge is effected regardless of heating demand; conversely, with "PTnn" option post-purge can be interrupted by the heating demand restoration and consequently the device goes to an ignition cycle. On request; post-purge of nn seconds due to shut off in running position (settable upon request) ("Cnn" or "CTnn" Options). With "Cnn" option post-purge is effected regardless of

heating demand; conversely, with “CTnn” option post-purge can be interrupted by the heating demand restoration and consequently the device goes to an ignition cycle.

– *Option 17 (“XP”): Protections of the ignition transformer*

Standard mode; the ignition transformer is activated without delay for cooling. On request; if the device is subject to a lot of frequent ignitions, it is possible to set a delay time of the heating demand to allow the transformer ignition to cool down ("XP" Option). On request, with option "XR", the output of the device is protected by a resistor.

– *Option 18 (“UV”): Flame detector*

Standard mode; the flame is detect electrode or photodiode. On request, with option "UV", with phototube UV.

– *Option 19 (“TH”): Heat demand*

Standard mode; the heat demand is served continuously. On request, with option "TH", the heat demand is served in timed mode.

– *Option 19 (“R”): Lockout indicator output*

Standard mode; the output of the device is not protected. On request, with "R" option, the output of the device is protected by a resistor.

DIAGNOSTIC

In lockout condition with the pushing of the unlock button for more than 5 sec., the diagnostic routine is activated (alarm signal with blinks). The alarm signal is turned off for a number of times that depends on the lockout type with a pause of 2sec. between a series of blinks and the next. The table below shows the lockout type or the malfunctioning with the number of blinks.

Error Code Table	
Code of Alarm signal (red led)	**Potential Cause**
2 shut off • • • • •…•	Flame failure at the end of safety time «TS»: - Defective or soiled fuel valves - Defective or soiled flame detector - Poor adjustment of burner or no fuel - Defective ignition equipment
3 shut off • • • • • • •…•	Air pressure switch failure to close or the Revolutions Per Minute are below the minimum set value (BTX3XG). Preheater thermostat failure to close (BTXXXO).
4 shut off • • • • • • • • •…•	Extraneous light/Flame simulation at start-up
5 shut off • • • • • • • • • • •…•	Air pressure switch failure to open or the Revolutions Per Minute are more than the minimum set value (BTX3XG)
6 shut off • • • • • • • • • • • • •…•	Air pressure switch failure or the Revolutions Per Minute, in running position, are below the minimum value (BTX3XG).
7 shut off • • • • • • • • • • • • • • •…•	Flame failure in running position.
8-14 shut off	Generic internal failure

During the time cause of fault diagnosed, the control output are deactivated (the burner remains shut down, lockout condition). Diagnostics of the cause of fault is quit and the burner is switched on again by resetting the burner control. Press the lockout reset button for about 1 sec. (< 3 seconds)

CONTROLLER RESET

Non-volatile lockout (manual reset)

When the controller goes to a non-volatile lockout, in order to reset the system the reset button must be pressed till the lockout signal is shut off.

Volatile lockout (electrical reset)

In case of a volatile lockout the controller can be reset by interrupting and then restoring the power supply. It’s not possible to reset the system by shutting off the heating demand device.

SIGNALS DURING OPERATION

In the various operation conditions the device is able to signal the operation state through a multi-coloured LED located in the reset button (on board of the device). The colours legend is as follows:

LED SIGNALs	MEANING
Slow green blink	Device is in idle position (1 blink every 2 sec.).
Slow orange blink	Device is in idle position for cooling of ignition transformer (only with XP option 1 blink every 2 sec.).
Slow red blink	BTX3XG device is in waiting of air pressure (1 blink every 2 sec.). BTX3XO device is in waiting of pre-heater thermostat (1 blink every 2 sec.).
Stable green	Device is in working position with good flame signal.
Stable orange	Device is in ignition position (TS) without flame signal.
Stable red	Device is in lockout position
Fast orange blink	Device is in ignition position (TS) with good flame signal.
Fast green blink	Device is in working position (TS) with bad flame signal.
Red-orange blink	Power supply is under or over allowed voltage.
Green-orange blink	Device is in ignition position (TS) with bad flame signal.
Fast red blink	Parasite flame during startup.

It's possible to change upon request the operation status signals of multicoloured LED.

NOTES FOR THE DISPOSAL OPERATION

The controller contains electronic components and it must not be disposed of as a domestic waste. For the disposal operation refer to the local rules concerning special waste.

CONTROLS DENOMINATION

Type	**Options**
BT (1) (2) (3) (4)	(6) … (21)

Type description

(1) **Power Supply**
- 1: 12V
- 2: 24V

(2) **Combustion motor fan**
- 1: Not available.
- 3: Available.

(3) **Valve**
- 1: Direct ignition.
- 2: Intermittent first stage (versions without remote lockout signal).

(4) **Version (GAS - OIL)**
- G: device for GAS applications.
- O: device for OIL applications.

Options description

(6) **Ignition mode**
- No letter: Ignition spark operates for TSP time (TS-1). Standard mode
- A: Ignition spark operates for TS
- Ann: Ignition spark operates for TSP=TS-nn (nn seconds)
- B: Ignition spark is switched off when flame presence is detected
- Bnn: ignition spark is switched off when flame presence is detected, with delay of nn seconds.

Remark: *Gas applications: options "A", "B" and "Bnn" are available in dual-electrode version (separate ignition and detection electrodes) only, the delay of the "Bnn" option is limited by the duration of the TS (none post-ignition).*
Oil applications: the delay of the "Bnn" option is used for post-ignition.

(7) **Opening of the second stage gas valve EV2 or the auxiliary device when the flame is present**
- No letter: No delay time . Standard mode
- W: at the end of the TS safety time
- Wnn: at the end of the TS safety time with delay of nn sec. on request (see *"TECHNICAL DATA"* paragraph)

(8) **Lockout for flame simulation**
- No letter: Not available (the control remains in continuous waiting/pre-purge state). Standard mode
- K: Lockout condition
- Knn: Lockout condition with delay if requested (see *"TECHNICAL DATA"* paragraph)

(9) **No or insufficient air flow at starting; no switching of the thermostat TC at starting (oil versions)**
- No letter: The controller remains in stand-by condition (control remains in continuous waiting state); Standard mode
- Qnn: Lockout condition with delay if requested (see *"TECHNICAL DATA" paragraph*)

(10) **Checking of the air pressure switch (gas and oil versions) or the preheater thermostat (oil versions)**
- No letter: Checking of the air pressure switch or the preheater thermostat. Standard mode
- G: without checking of the air pressure switch or the preheater thermostat
- GZ: with checking of the preheater thermostat or air pressure switch at start-up (without checking in working position).
- GP: without checking of the preheater thermostat and with checking of the air pressure switch (only oil versions).
- GRnn: check of the minimum Revolutions Per Minute (nnx100 rpm) of brushless fan motor.

Remark: *controls with option "G" are intended for special applications where a check of the air flow is not required by the standard appliance.*

(11) **No or insufficient air flow (gas versions) at running or thermostat TRISC opening (oil versions) at running**
- No letter: Safety shutdown followed by stand-by condition. Standard mode
- S: Lockout condition without delay
- Snn: The controller proceeds to the lockout condition after a certain number "nn" of air pressure switch failures or preheater thermostat failures in running position.

(12) **Flame failure at running**
- No letter: Recycling. Standard mode
- V: Lockout condition without delay
- Vnn: The controller goes to lockout condition after a "nn" number of losing flame signal from running position. (see *"TECHNICAL DATA" paragraph*)

(13) **Recycle attempts due to ignition failure**
- No letter: Single ignition cycle after a controller shut down. Standard mode
- Ynn: Multiple recycle attempts (see *"TECHNICAL DATA"* paragraph)
- YRnn: Multiple recycle attempts, with a single attempt in case of loss flame during operation (see *"TECHNICAL DATA"* paragraph)

Options description

(14) **Inter-waiting or inter-purge time**

No letter: No inter-waiting or inter-purge time. Standard mode

Inn: The inter-waiting/inter-purge time is set if requested (see *"TECHNICAL DATA"* paragraph)

(15) **Pre-ignition**

No letter: Without pre-ignition (gas version); pre-ignition for all pre-purge time (oil version);. Standard mode

Jnn: The pre-ignition time is set if requested (see *"TECHNICAL DATA"* paragraph)

***Remark**: Option "J" is available in dual electrodes version only (separate ignition and ionization electrodes).*

(16) **Post-purge of the main motor fan**

No letter: No post-purge. Standard mode

Pnn: The post-purge time is set if requested (see *"TECHNICAL DATA"* paragraph) and it cannot be interrupted by the heating demand restoration

PTnn: The post-purge time is set if requested (see *"TECHNICAL DATA"* paragraph) and it can be interrupted by the heating demand restoration

Cnn: post-purge time of nn seconds due to shut-off in running position, it cannot be interrupted by the heating demand restoration

CTnn: post-purge time of nn seconds due to shut-off in running position, it can be interrupted by the heating demand restoration

(17) **Ignition transformer protection**

No letter: without protection. Standard mode.

XP: with delay for transformer cooling.

XR: output with resistor for surge protection of the transformer.

XPR: output with resistor for surge protection of the transformer and with delay for transformer cooling.

(18) **Flame detector**

No letter: with electrode or photodiode. Standard mode

UV with UV phototube (see *"TECHNICAL DATA"* paragraph)

***Remark**: Option "UV" is available 24V versions only.*

(19) **Heat Demand**

No letter: without timers. Standard mode

TH1: with timers (70% and 40% on 4 min.)

THn*: with timers

*** *Remark**: Letter "n" represents the reference number of a specific function. More details are available in user interface module of BT controller data sheet.*

(20) **Lockout indicator output**

No letter: High voltage output without any protection against cabling mistakes of the reset push button. Standard mode

R: Presence of an internal resistor to protect the reset push button against the inversion of its connections

(21) **Actuators control for burners with or without modulation.**

No letter: without control. Standard mode.

SA: with control. Prepurge time TP checked with volume of air at low fire position during start-up and operation

SAnn: with control. Prepurge time TP checked with nominal volume of air.
Minimum position reached nn seconds before the end of prepurge time TP.

***Remark**: Option "SA" is available on BT131… and BT231… versions only and without lockout output SB.*

HYDRAULIC DIAGRAMS

Example: **BT231G J3 V3** ⇒ the features of this model are the following:

2: 24V power supply;
3: with fan and air pressure check;
1: one valve;

options

J3: pre-ignition of 3 sec.;
V3: with 3 recycle attempts for lost flame, 4 ignition attempts

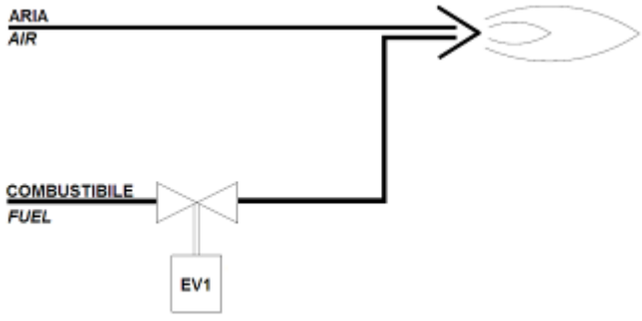

BTx11G

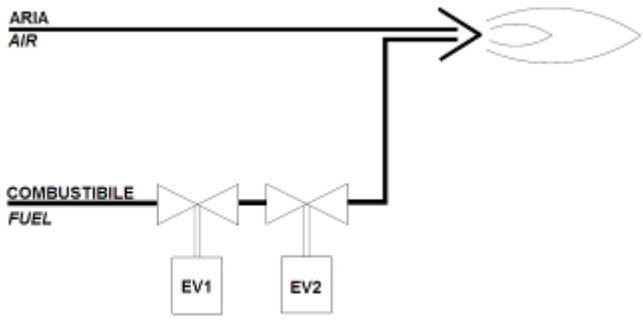

BTx12G

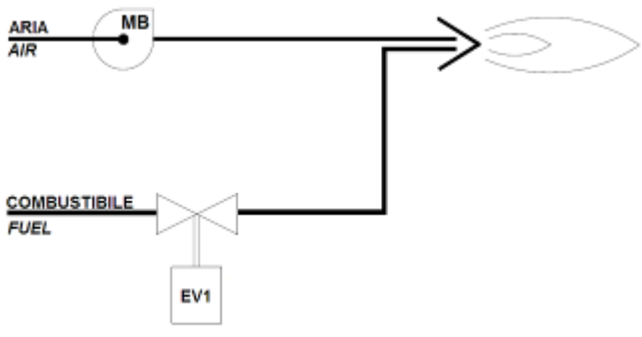

BTx31G

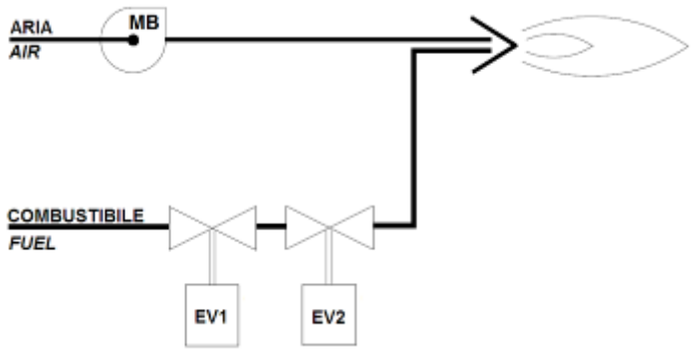

BTx32G

Example: **BT132O Y3** ⇒ the features of this model are the following:

1: 12V power supply;
3: with fan;
2: two valves;

options

V3: with 3 recycle attempts for lost flame, 4 ignition attempts

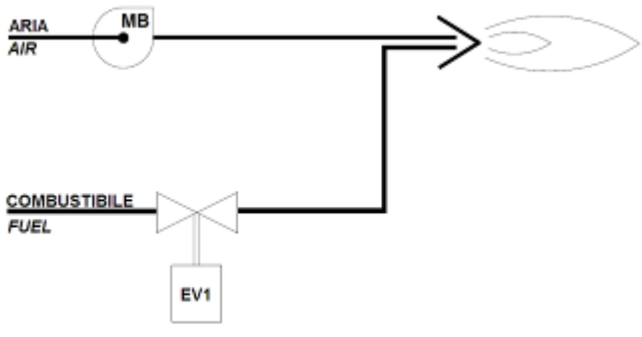

BTx31x

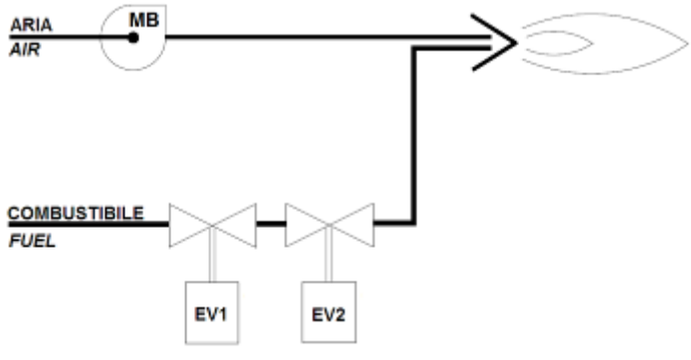

BTx32x

ПРОМЭЛЕКТРОНИКА / sales@prom-elec.com

WIRING DIAGRAMS

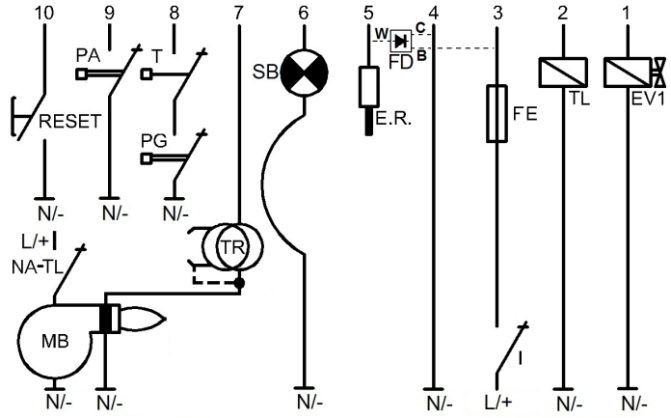

BRAHMA TIPO BT131G - BT231G MADE IN ITALY

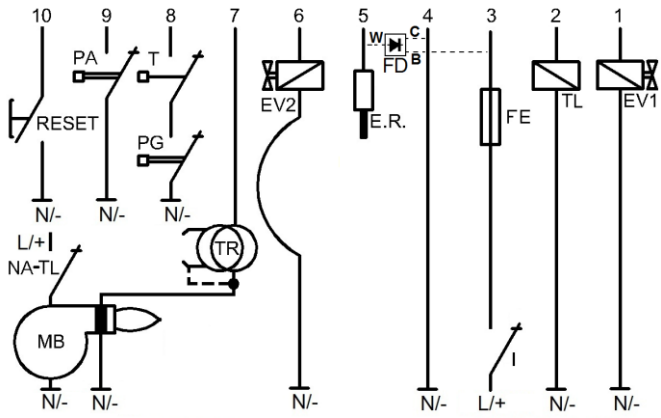

BRAHMA TIPO BT132G - BT232G MADE IN ITALY

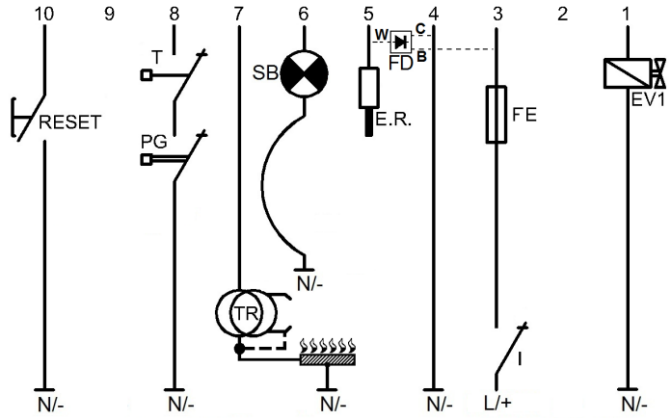

BRAHMA TIPO BT111G - BT211G MADE IN ITALY

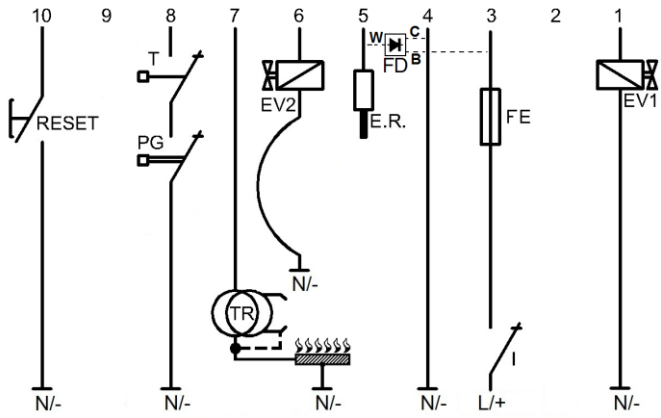

BRAHMA TIPO BT112G - BT212G MADE IN ITALY

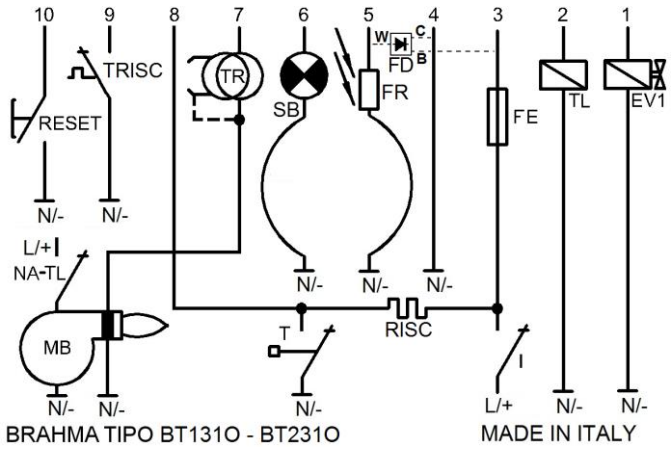

BRAHMA TIPO BT131O - BT231O MADE IN ITALY

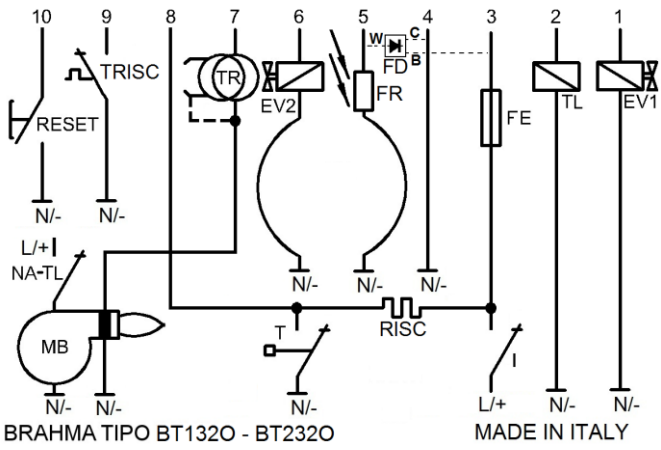

BRAHMA TIPO BT132O - BT232O MADE IN ITALY

T	RISC	TRISC	TL	NA-TL	RPM PA	MB	TR	RESET
Room Thermostat	*Preheater*	*Preheater Thermostat*	*Contactor coil*	*Contactor switch*	*Air pressure switch or Revolutions Per Minute*	*Fan*	*Ignition Transformer*	*Reset*
EV1	EV2	FE	I	FR	PG	FD	E.R.	SB
First Stage Valve	*Second Stage Valve*	*External Fuse*	*Main switch*	*Photocell*	*Gas pressure switch*	*Photodiode FD*	*Ionization Probe*	*Lockout signal*

Remarks:

- N/-: Ground terminal Neutral/Negative;
- L/+: Power supply terminal Live/Positive;
- FD photodiode connection: blue cable (C) to 4 terminal, white cable (W) to 5 terminal, brown cable (B) to 3 terminal;
- UV phototube connection: blue cable to 5 terminal, brown cable to N/- terminal;
- suggested connection to TR igniter: blue cable (N/-) to the metal frame of the burner (connected to N/- terminal);

CYCLE DIAGRAMS

Standard cycle diagram of BTX31G

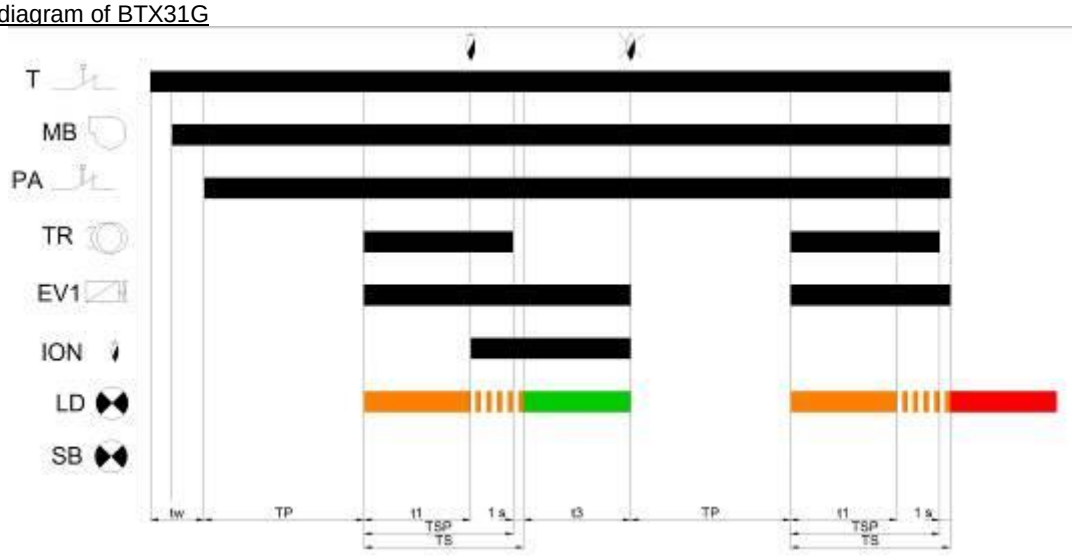

Times description

– tw= waiting time from the closing of heat request and the closing of the air pressure switch; With Qnn option, the device shall perform (after nn sec.) a lockout for non-closure of the air pressure switch;
– TP = pre-purge time;
– TS = safety time;

Standard cycle diagram of BTX31O

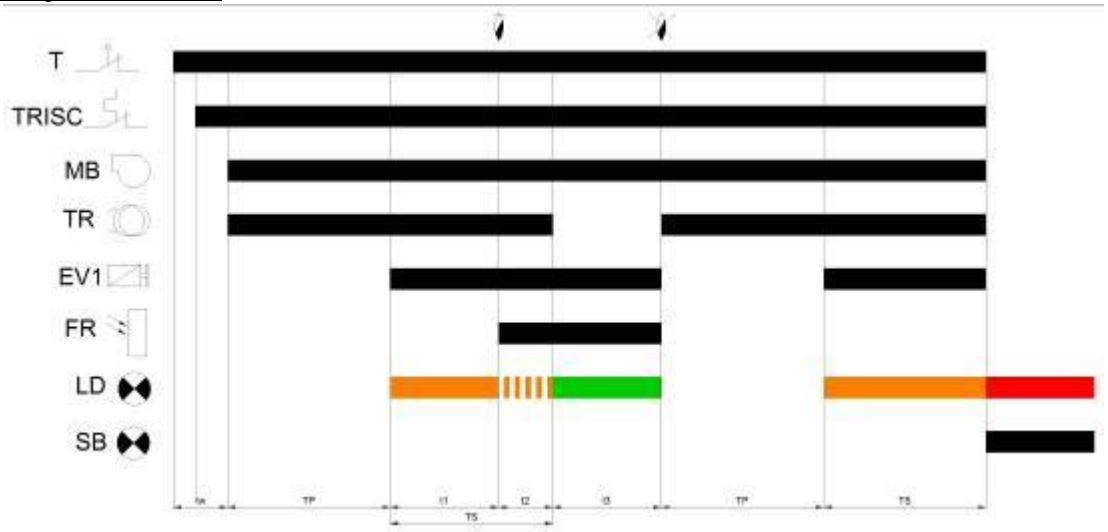

Times description

– tw= waiting time from the closing of heat request and the closing of the pre-heater thermostat switch; With Qnn option, the device shall perform (after nn sec.) a lockout for non-closure of pre-heater thermostat switch;
– TP = pre-purge time;
– TS = safety time;

OPTIONS AVAIABLE

The options diagrams shown below are merely examples and are referred to the gas versions, the behavior of the oil versions is the same.

DIAGRAM N°1: options W, Wnn, A, B, Jnn e Pnn/PTnn

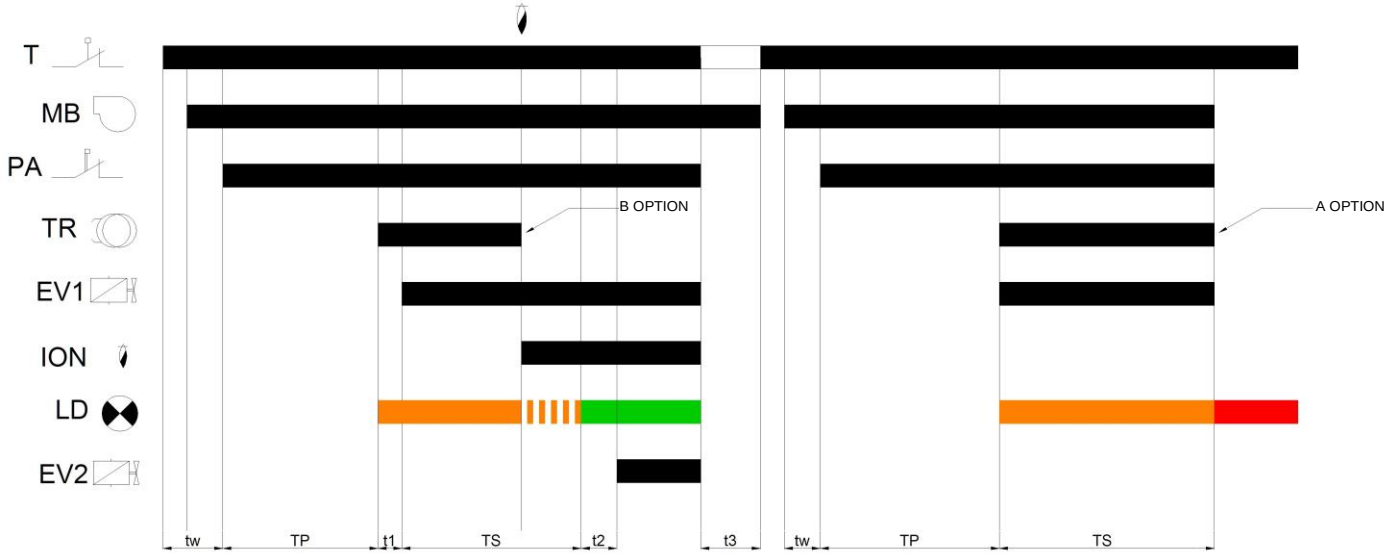

– tw= waiting time from the closing of heat request and the closing of the air pressure switch;
– TP = pre-purge time;
– t1 = pre-ignition time (Jnn option);
– TS = safety time;
– With A option = the ignition transformer is switched off at the end of the safety time;
– With B option = when the flame signal is detected, the device switches off the ignition transformer;
– t2 = In standard mode (BTxx2x), EV2 is activated when the device detects a flame signal; with W option, EV2 is activated at the end of the TS; with option Wnn, EV2 is activated with delay of nn sec. at the end of the TS.
– t3 = post-purge time of nn sec. (option Pnn / PTnn);
– TSP = ignition time (TS-1); with A option the TSP=TS.

DIAGRAM N°2: options Qnn, K, Knn, Bnn, V e Vnn

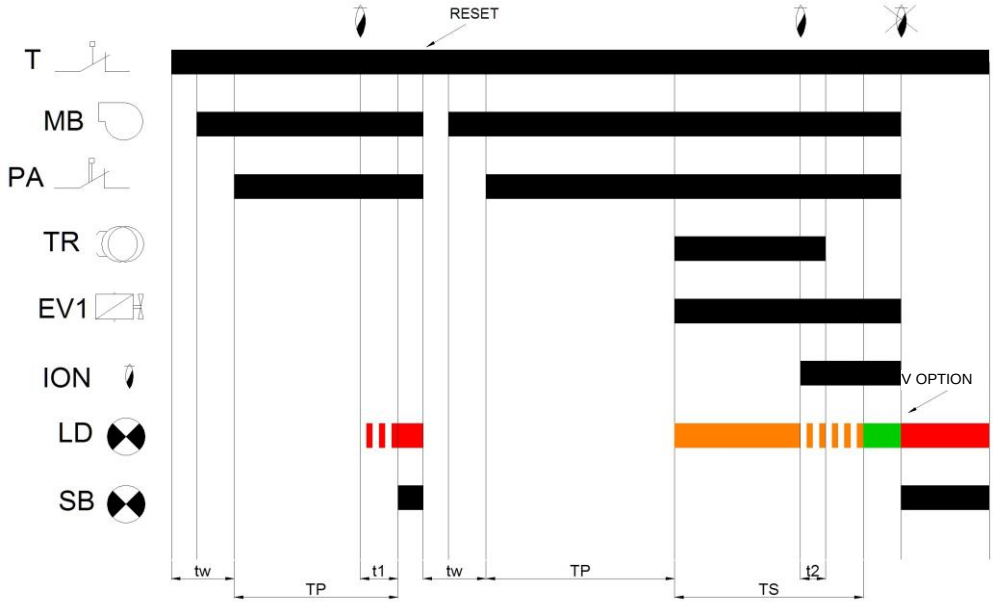

– tw= waiting time from the closing of heat request and the closing of the air pressure switch PA; With Qnn option, the device shall perform (after nn sec.) a lockout for non-closure of the air pressure switch;
– TP = pre-purge time;
– t1 = with K option, lockout without delay time t1, with option Knn, lockout with delay t1;
– t2 = with Bnn option, shut off of ignitior with delay t2;
– TS = safety time;
– With V option, lockout without delay for loss flame during operation; with the option Vnn, the device performs nn repetitions of the cycle. The last loss of the flame signal the device performs a lockout;

DIAGRAM N°3: options Y e I

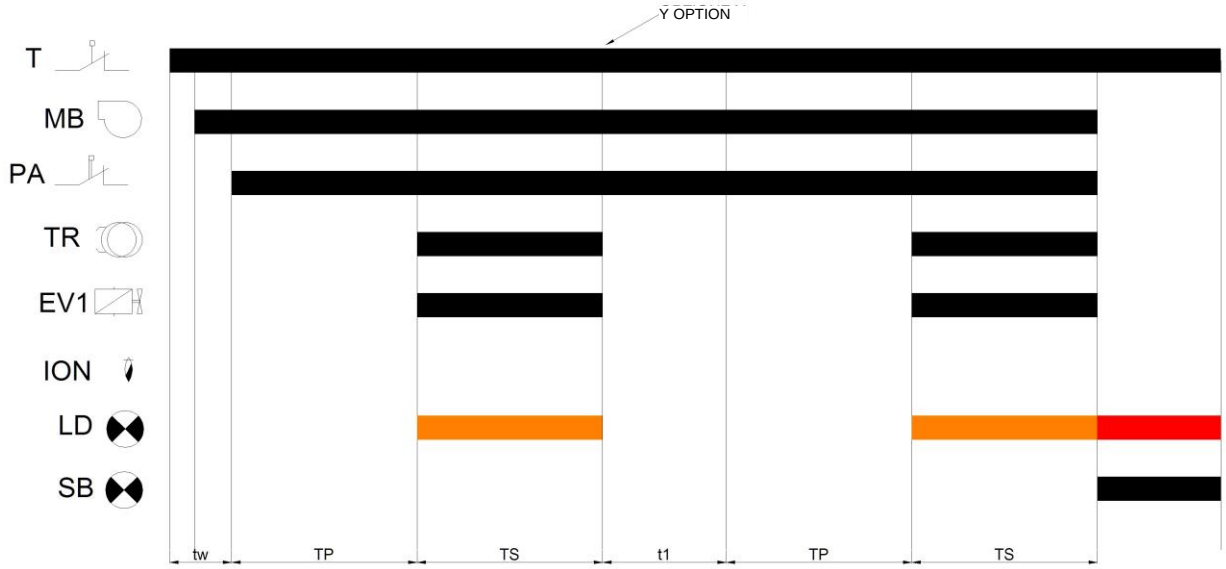

– tw= waiting time from the closing of heat request and the closing of the air pressure switch PA;
– TP = pre-purge time;
– t1 = inter-purge time (Inn option);
– with option Ynn, the device performs nn attempts of recycle; At the last ignition cycle it performs the lockout at the end of safety time.
– TS = safety time;

DIAGRAM N°4: options Jnn, G, Wnn, Cnn e CTnn

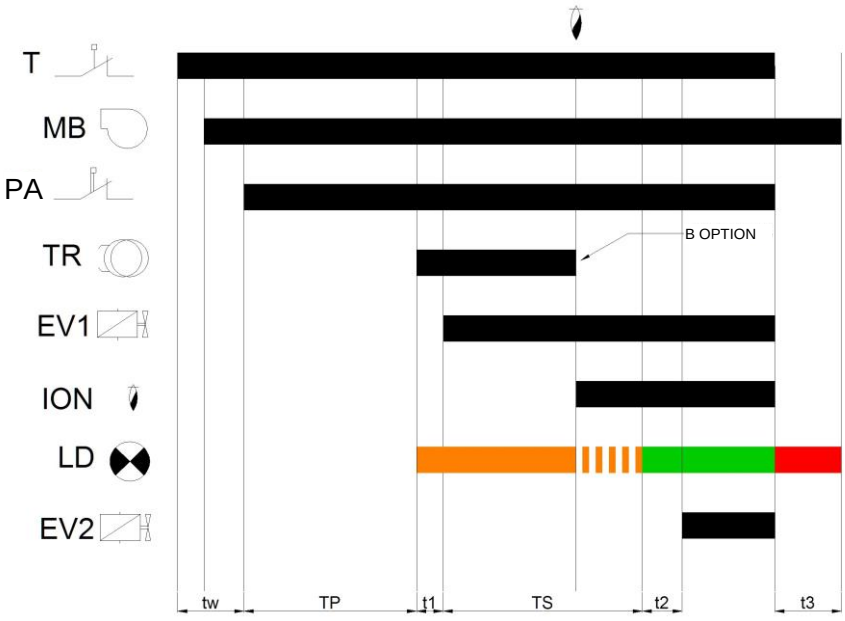

– tw= waiting time at the start-up of the heat request;
– TP = pre-purge time;
– t1 = pre-ignition time (Jnn option);
– with option G, the device doesn't performs the air pressure check.
– TS = safety time;
– t2 = EV2 delay time (opzione Wnn);
– t3 = post-purge time during lockout (opzioni Cnn o CTnn);

DIAGRAM N°5: options S, Snn e XP

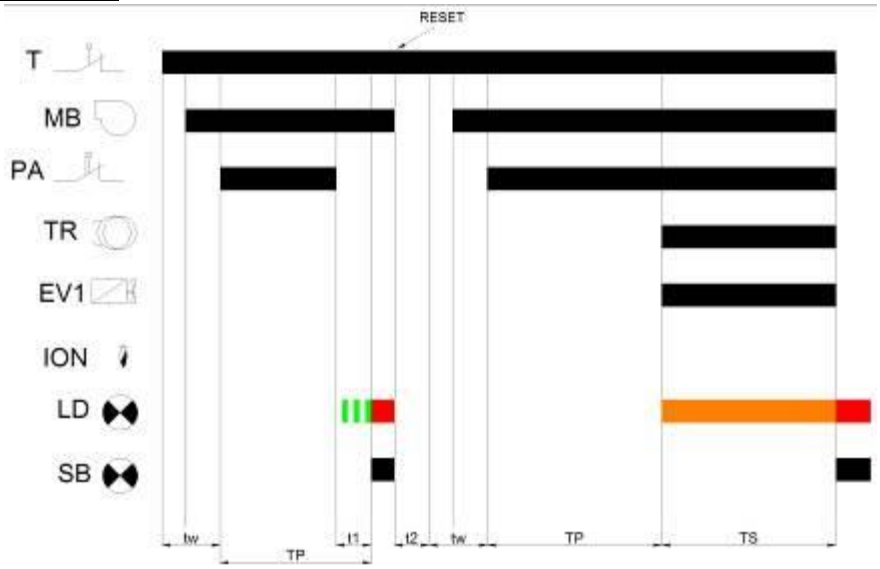

– tw= waiting time at the start-up of the heat request;
– TP = pre-purge time;
– t1 = waiting time of air pressure switch (Qnn option);
– with option S, lockout without delay.
– t2 = waiting time for cooling of ignitor due to frequent cycle (XP option);
– TS = safety time;

SYMBOLS LEGEND

T ROOM THERMOSTAT

MB BURNER MOTOR

PA AIR PRESSURE SWITCH

TR IGNITOR TRANSFORMER

EV FUEL VALVE

TS SAFETY THERMOSTAT

ION FLAME DETECT

ION FLAME LOSS

LD ON BOARD SIGNALLINGS

SB REMOTE LOCKOUT SIGNAL

TRISC PRE-HEATER THERMOSTAT

PHOTOCELL SIGNAL

WIRING DIAGRAMS WITH AUXILIARY DEVICES

The wiring diagrams shown below are merely examples, they are not exhaustive and they must be verified in the individual case depending on the application. The wiring diagrams are of the most complete versions of the controller. It is easy to understand which parts can be present or absent according to the different options requested.

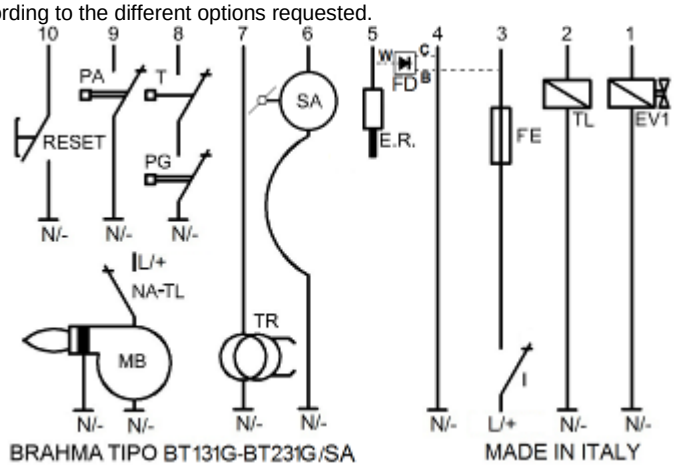

BRAHMA TIPO BT131G-BT231G/SA

MADE IN ITALY

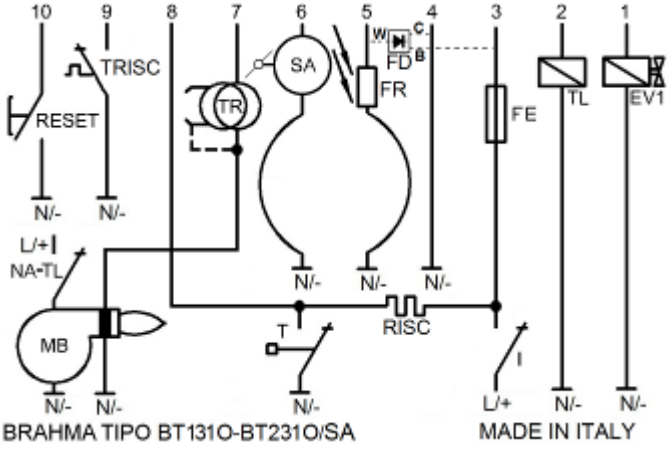

BRAHMA TIPO BT131O-BT231O/SA

MADE IN ITALY

T	RISC	TRISC	TL	NA-TL	RPM PA	MB	TR	RESET
Room Thermostat	*Preheater*	*Preheater Thermostat*	*Contactor coil*	*Contactor switch*	*Air pressure switch or Revolutions Per Minute*	*Fan*	*Ignition Transformer*	*Reset*
EV1	SA	FE	I	FR	PG	FD	E.R.	SB
First Stage Valve	*Air Damper*	*External Fuse*	*Main switch*	*Photocell*	*Gas pressure switch*	*Photodiode FD*	*Ionization Probe*	*Lockout signal*

Remarks:

- N/-: Ground terminal Neutral/Negative;
- L/+: Power supply terminal Live/Positive;
- FD photodiode connection: blue cable (C) to 4 terminal, white cable (W) to 5 terminal, brown cable (B) to 3 terminal;
- UV phototube connection: blue cable to 5 terminal, brown cable to N/- terminal;
- suggested connection to TR igniter: blue cable (N/-) to the metal frame of the burner (connected to N/- terminal);

OPERATING CYCLES WITH AUXILIARY DEVICES

The wiring diagrams shown below are merely examples, they are not exhaustive and they must be verified in the individual case depending on the application. The wiring diagrams are of the most complete versions of the controller.

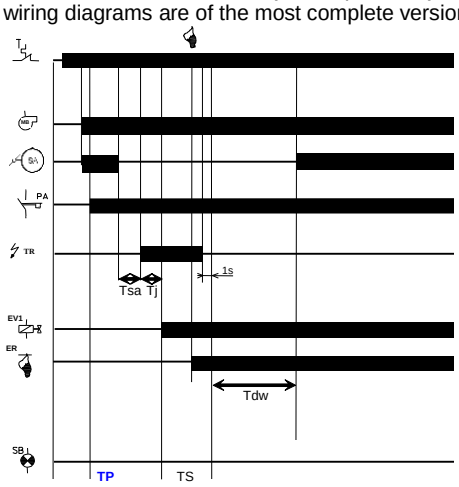

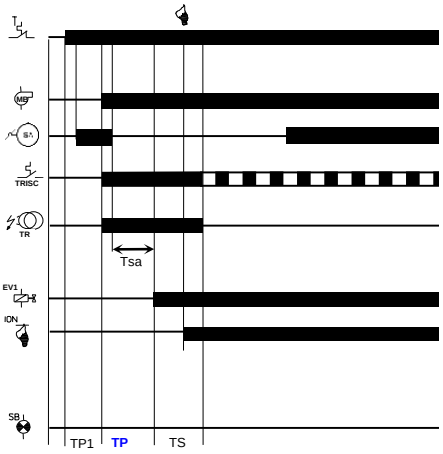

ATTENTION -> Brahma S.p.A. accepts no responsibility for any damage resulting from customer's tampering with the product.