⚠ Read the operating and mounting instructions before commissioning.

⚠ Only specialised personnel may perform work on the automatic burner control system.

⚠ Never perform any work when the control system is live. This also applies if low-voltage components such as servomotors, display or communication components are replaced or installed.

⚠ In case of fuse failure, check the safety function of the automatic burner control system. Otherwise contact weld caused by short-circuit may occur.

⚠ Only specialised personnel may set operating parameters.

⚠ Only use the communication connection together with components expressly approved for this purpose.

⚠ Perform the connection related to the correct phase and the protective conductor connection according to the terminal diagram and check it before commissioning.

⚠ Warranty for the control system expires on improper handling of the electronic system or due to incorrect storage.

⚠ The data contained in these instructions specify the automatic burner control system. They do not imply any characteristics.

⚠ If you do not follow these instructions, danger to life to the equipment may occur.

Operating and mounting instructions

DUNGS®
Combustion Controls

Automatic burner control system MPA22



Old documentation - Only for information!
Product is not available anymore!

Technical description
The MPA22 is a microprocessor-controlled, automatic burner control system with intermittent duty for controlling and monitoring two- and three stage modulating blower burners with a single servomotor, electronic modulating blower burners with 2 servomotors in combination with an electronic control unit, and pneumatic modulating blower burners with 1 servomotor. With integrated valve proving system for operation as automatic gas burner control system.
The MPA22 has an eBUS connection.

Accessories
Flame monitoring device
Servomotors
Display unit
eBUS interface
Coding plug
Connector plug

Classification according to EN 298
FMCLJN, depending on programming
FMLLJN, depending on programming

Approvals for gas types
EU type test approval as per EU Gas Appliance Directive.

MPA22 CE-0085AU316

Approvals for oil types
Register/type number
MPA22 5F185/99

Printed in Germany / M-BOS • Edition 03.14 • Nr. 231 763

ПРОМЭЛЕКТРОНИКА / sales@prom-elec.com

Contents

DUNGS®
Combustion Controls

Specifications....3-11
Operating modes....12
Operating modes Gas firing, electronic modulation....13-14
Terminal diagram - Gas firing, electronic modulation....15
Operating mode Gas firing, pneumatic modulation....16-17
Terminal diagram - Gas firing, pneumatic modulation....18
Operating mode - Oil firing, three stage....19-20
Terminal diagram - Oil firing, three stage....21
Integrated valve proving system, gas firing....22-25
Time diagram - Gas firing, electronic modulation....26-27
Time diagram - Gas firing, pneumatic modulation....28-29
Time diagram - Oil firing, three stage....30-31
Explanation display....32
Display functions....33
Relationships between the individual display modes....34-35
Display during standby....36
Display when a password is entered in parameterisation or setup mode....37
Display when the basic configuration is entered....38-39
Commissioning, setup mode....40
Commissioning Main parameters....41
Setup mode - Gas firing, electronic modulation....42-51
Setup mode - Gas firing, pneumatic modulation....52-56
Setup mode - Oil firing, three stage....57-63
Display in operating mode
Gas firing, electronic modulation and Gas firing, pneumatic modulation....64-69
Display in operating mode „Oil firing, three stage“....70-74
Display in information mode
Gas firing, electronic modulation; Gas firing, pneumatic modulation; Oil firing, three stage....75-78
Display in service mode
Gas firing, electronic modulation....79-87
Display in service mode; Gas firing, pneumatic modulation....88-93
Display in service mode; Oil firing, three stage....94-99
Display in parameterisation mode
Gas firing, electronic modulation; Gas firing pneumatic modulation; Oil firing, three stage....100-108
Error indication
Gas firing, electronic modulation; Gas firing, pneumatic modulation; Oil firing, three stage....109-110
Error messages....111-113
Notes....114

Old documentation - Only for your information!
Product is not available anymore!

Printed in Germany / M-BOS • Edition 03.14 • Nr. 231 763

DUNGS®
Combustion Controls



Nominal voltage

230 VAC - 15 % to +10 %
When the voltage increases, the MPA will work from a switch-on voltage of 195.5 +- 1.5 V When the voltage drops, the MPA will switch off from a switch-off voltage of 182.5 +- 2.5 V using a safety shutdown and go into the stand-by mode

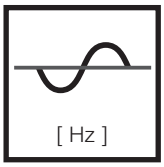

Frequency

50/60 Hz



Performance rating

max. 17VA at 230 VAC



Fuse

Back-up fuse: max. 10 A slow-blow
Internal fuse: none
Keep to the permissible breaking capacities



Degree of protection

IP 20 installation must comply with IP 40
IEC 529 (DIN 40 050)

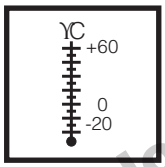

Ambient temperature

-20 °C to +60 °C



Air humidity

Climate F DIN 40 040



Electrical connection

Boiler: with 7- and 4-pole plugs as per DIN 4791
Burner: encoded plug system
pcb direct plug for servomotors, display unit and eBUS.
Perform wiring in compliance with the locally prevailing regulations and the terminal diagram of the burner manufacturer. The max. permissible cable lengths must be observed.
Extra-low voltage is not protection-isolated. Make sure that you use the correct polarity.

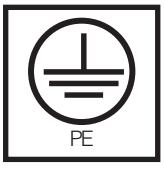

Protective conductor Connection

Integrated in system
The protective conductor connection for the burner is performed using the protective conductor cable with connector for the automatic burner control system. Permanently tighten the connection screw which connects the MPA22 and the protective conductor connection with the burner housing.



Weight approx.

0.9 kg

Old documentation - Only for your information!
Product is not available anymore!

Breaking capacities
Total max. 10 A

Designation	Breaking capacity
Burner motor	230 VAC/4 A/cos φ = 1
	230 VAC/1,5 A/cos φ = 0,4
Burner motor (endurance run)	230 VAC/4 A/cos φ = 1
	230 VAC/1,5 A/cos φ = 0,4
Ignition transformer	230 VAC/3 A/cos φ = 1
	230 VAC/1 A/cos φ = 0,2
Valve Y1 + status display	230 VAC/2 A/cos φ = 0,4
Valve Y2	230 VAC/2 A/cos φ = 0,4
Valve Y3	230 VAC/2 A/cos φ = 0,4
Fault output	230 VAC/1 A/cos φ = 0,4
Safety sequence (pressure switch max. gas)	230 VAC/10 A
Pulse generator	24 VDC/2 mA
Pressure switch air stage	24 VDC/20 mA
Pressure switch min. gas	24 VDC/20 mA
Pressure switch VPS	24 VDC/20 mA
Flame detector	
Ionisation electrode	230 VAC
UV diode	230 VAC
Photoresistor	5 VDC
Servomotor gas	24 VDC/max.300 mA
Servomotor air	24 VDC/max.300 mA
Display board	24 VDC/max.10 mA
Bus interface	5 VDC/10 mA
Temperature or pressure regulator	230 VAC/10 mA
Negative capacity or stage 2	230 VAC/10 mA
Positive capacity or stage 3	230 VAC/10 mA

Flame supervision

Ionisation
UV diode: UV4 (Dungs)
Infrared/UV: IRD 1020 ov. IRD 1020.1 or UVD 971 (Satronic)
KLC 1000, 1001 or 2002 (BST Solution)
FLW10, FLW20 (DUNGS)
Please note that the reaction times of the MPA 22 (< 1 s) and of the sensors (< 1 s; see corresponding data) will add up!
only for oil burners
Photoresistor: QRM 1A (Landis & Stefa)
Photoresistor: MZ 770 (Satronic)

Servomotors

Stepped-motor servomotor with integrated stepped motor driver and digital acknowledgement via encoder disk
SAD 1.2 with 1.2 Nm torque (IP 40)
SAD 1.2 WG with 1.2 Nm torque (IP 54)
SAD 1.5 with 1.5 Nm torque (IP 40)
SAD 1.5 / Pot. 10k with 1.5 Nm torque (IP 40)
SAD 3.0 with 3 Nm torque (IP 40)
SAD 3.0 WG with 3 Nm torque (IP 54)

Display module

Display module AM01 with 7 1/2-digit LCD display and 5 operating keys incl. unlocking key. Connected via a 6-pole cable, cable length: max. 1 m

Minimum display

Unlocking key with fault indicator lamp instead of display unit

Coding plug oil three stage

Coding plug CS01 for operation as oil burner instead of the servomotor gas

Coding plug gas pneumatic

Coding plug CS02 for operation as gas burner in combination with pneumatic system instead of the servomotor gas

Fault unlock

Via the unlocking key on the AM xx Display or via a separate unlocking key

Pulse counter input

Connection possibility for a floating pulse counter contact for fuel volume acquisition, adjustable divisor in EEPROM.
Max. 255 pulses/unit of volume, max. 6 Hz

Old documentation - only for your information!
Product is not available anymore!

Printed in Germany / M-BOS • Edition 03.14 • Nr. 231 763

Comunication

The MPA22 is an eBUS compatible device. Depending on the application, various interfaces are used for connections. Connections to the eBUS is only permissible using an MPA/eBUS interface or an MPA/PC interface. The interfaces must be electrically isolated (VDE 0551).

The MPA22 software supports the eBUS protocol in accordance with the eBUS specifications V1.2 at the connection layer OSI 2, the V1.3 application layer OSI 2, and the V1.4 application layer OSI 7.

The following communication commands are implemented for MPA controller communications to the eBUS specification:

Service data commands (Service 03h 04h to 08h)
Burner control commands (Service 05h 00h to 03h, 08h, 09h
System data commands (Service 07h 03h to 05h, FEh and FFh)
Broadcast message (Service FEh 01h)

The commands listed can make the following MPA22 information available to other eBUS compatible subscribers via the eBUS:

Number of successful start-ups
Operating hours
Fuel consumption
Periodic information from an external controller to the MPA22 concerning heat requirements and modulation grade.
Periodic information from the MPA22 to an external controller concerning heat requirements and modulation grade.
State number
Air pressure monitor operating status
Gas pressure monitor operating status
Flame operating status
Valve Y2 operating status
Valve Y3 operating status
Alarm signal
Modulation depth
Device number
Software version
Hardware version

In case of error
MPA identification
Error code
Extra error message
State number
Software watchdog value
Subroutine entry code
Subroutine exit code

Old documentation - only for your information!
Product is not available anymore!

Printed in Germany / M-BOS • Edition 03.14 • Nr. 231 763

MPA-Vision

MPA-Vision is a software tool to connect the eBUS to the MPA22. This Software tool contains the following options:

Periodic transmission of operating parameters
Internal error memory display
Parameterising the MPA
Load and save complete parameter sets
Various printing options
eBUS monitor for checking proper functioning

As-delivered state

The automatic burner control system has a default state so that a basic setting is available for the burner manufacturer or in case of replacement.

Installation position

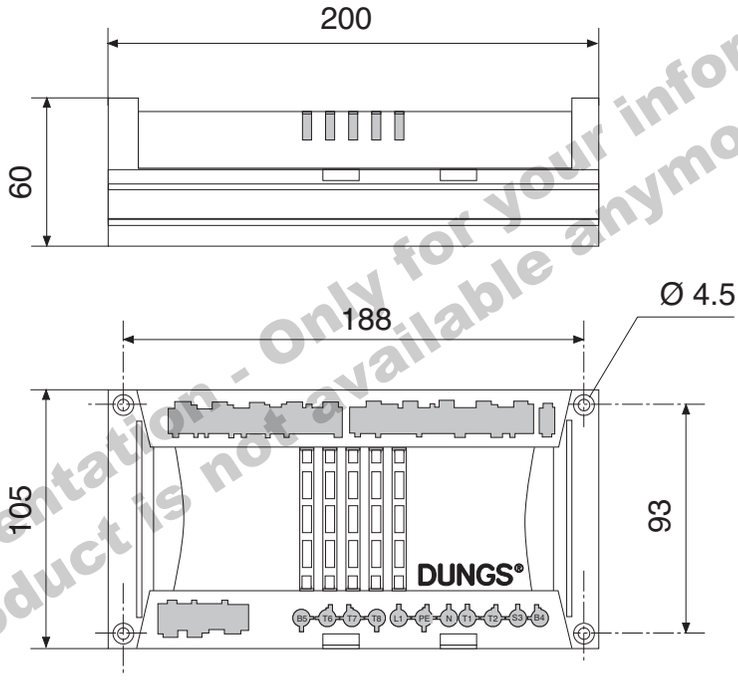

Old documentation - Only for your information! Product is not available anymore!

Installation position

arbitrary

Cable lengths

The cabling of connected components must not be longer than 3 m.
The following types of connection are exceptions to this rule:

Mains cable	any
Temperature controller	any
Power inputs	any
Valve Y1	any
Safety chain	any
Remote enable	10 m

⚠ The unlocking key must be mounted such that upon pressing it eye contact with the burner is guaranteed. If you want to use the unlocking key function as remote unlocking, the requirements of DIN EN 14459 Appendix J must be observed by providing suitable additional measures.

Printed in Germany / M-BOS • Edition 03.14 • Nr. 231 763

ПРОМЭЛЕКТРОНИКА / sales@prom-elec.com

Switching times	Setting range	Unit	Access level
Preventilation period	10…240	s	OEM
Pre-ignition period	0…2	s	OEM
Safety period, gas operation	20…50	0.1 s	OEM
Safety period, oil operation	20…50	0.1 s	OEM
Stabilising time	1…60	s	OEM
Postventilation period	0…240	s	Service
Test time, valve Y2	1…240	s	Service
Test time, valve Y3	1…240	s	Service
Wait time	0…100	min	Service
Controller enable time	0…59	s	Service

Switching functions			
Valve proving system	ON ≥ 1 OFF = 0		Service 0…1
Restarts		OEM	
Gas pneu/Oil operation with/without supervision	with ≥ 1 , without = 0		Service

Other settings			
eBUS address	03H, 13H, 33H, 73H, F3H, 1FH, 3FH, 7FH		Service
Divisor for pulse counters	1…255	pulses/l or m^3	OEM
Air damper actuator standby mode	0.0…25.5	°	Service
Regulator address	10H, 17H, 30H, 37H, 70H, 77H, F0H, F7H, OFF		Service
Direction of rotation + reference servomotor air	0, 8, 16, 24		OEM/Service (using Display)
Direction of rotation + reference servomotor gas	0, 8, 16, 24		OEM/Service (using Display)
Modulation delay	0…15		Service
Calculating constants for reference curve	1…255		OEM
Regulation ratio pre-ventilation	0…200	0,5 °	OEM
Regulation ratio ignition position	0…200	0,5 °	OEM

Customer parameters to save information for Service Department and the burner manufacturer	0…255		OEM

Customer parameters on Level 2			
Customer 20…Customer 35	0…255		Service

Customer parameters on Level 3
Customer 30…Customer 35

Operator
Service
OEM
Manufacturer
No access

The switching times and the above-mentioned functions, settings and customer parameters can be changed within the limits indicated. Distinctions are made between several setting levels:
- System operator, access without password
- Trained service personnel of burner manufacturer
- Burner manufacturer
- Automatic burner control system manufacturer
- No access, read only

On the MPA22, the operator has read access only. If a password is not entered, only operating data request and fault unlock in case of fault are possible.
When a password is entered, the Service personnel can activate the setting and the parameterisation mode in order to change the settings marked as SERVICE (see above) within the limits indicated.
Access to the OEM level is possible when the burner hood is removed and using special external equipment and software as well as specific interactive operations.
The operating and mounting instructions do not contain these access possibilities and the subjacent access levels.

old documentation. Only for your information!
Product is not available anymore!

Printed in Germany / M-BOS • Edition 03.14 • Nr. 231 763

Setpoints for the servomotor characteristics

The following setpoints for the air motor and gas motor in each operating mode may only be changed in setup mode; they are not enabled until the settings for automatic burner operation have been completed.
The setting values are to be recorded in the setup log after the burner has been set and should be kept in a safe place on the machine and in a suitable form.
Setting range on standby

Setpoints for gas firing, pneumatic modulation

Setting range on standby	
Air motor P9	0.0°…90.0°
Air motor P1	0.0°…P9
Air motor P0	0.0°…90.0°
Setting range in operation	
Air motor P9	P1…90.0°
Air motor P1	0.0°…P9
Air motor P0	0.0°…90.0°

Setpoints for gas firing, electronic modulation

Setting range on standby	
Air and gas motor P9	0.0°…90.0°
Air and gas motor P1	0.0°…P9
Air and gas motor P0	P1 - 25.5°…P1 + 25.5° and P0 ≥ 0.0°
Setting range in operation	
Air and gas motor P0	P1 - 25.5°…P1 + 25.5° and P0 ≥ 0.0°
Air and gas motor P1	0.0°…P2
Air and gas motor P2	P1…P3
Air and gas motor P3	P2…P4
Air and gas motor P4	P3…P5
Air and gas motor P5	P4…P6
Air and gas motor P6	P5…P7
Air and gas motor P7	P6…P8
Air and gas motor P8	P7…P9
Air and gas motor P9	P8…90.0°
Lower limit bu	0…bo (0 = P1; 200 = P9)
Upper limit bo	bu…200 (0 = P1; 200 = P9)

Setpoints for oil firing, three stage

Setting range on standby		
Air motor	P9	0.0°…90.0°
Air motor	P3	0.0°…P9-0.1°
Air motor	P1	0.0°…P3-0.1°
Air motor	P0	0.0°…P1
Air motor	P2	P1 + 0.1°…P3
Air motor	P4	P3 + 0.1°…P9
Setting range in operation		
Air motor	P0	0.0°…P1
Air motor	P1	0.0°…P2 -0.1°
Air motor	P2	P1 + 0.1°…P3
Air motor	P3	P2…P4 -0.1°
Air motor	P4	P3 +0.1°…P9
Air motor	P9	P4…90.0°

Old documentation - Only for your information!
Product is not available anymore!

Printed in Germany / M-BOS • Edition 03.14 • Nr. 231 763

Device specific counters, storage devices and data

Contain general information which is retrievable via the display unit by the operator.

Counters and storage devices

Description	As-delivered state
Start-up counter	deleted
Operating hours counter stage 1	deleted
Operating hours counter stage 2	deleted
Operating hours counter stage 3	deleted
Pulse counter	deleted
History buffer (6-layer fault memory)	deleted

Device specific data

Device no.	Serial no.
Production date	Date

This information may only be deleted by the manufacturer of the automatic burner control. The exception to the rule is the history buffer, which may be deleted in parameterisation mode by Service personnel.

Old documentation - Only for your information! Product is not available anymore!

Printed in Germany / M-BOS • Edition 03.14 • Nr. 231 763

Direction of rotation of the servomotors

MPA22 can be parameterised so that the servomotors can rotate both anticlockwise and clockwise in all operating modes. Two reference marks (A and B) can be used for the servomotor. Also, the reference point can be defined as 0° damper position or 90° damper position. Depending upon the combination selected, anticlockwise rotation or clockwise rotation is possible. Four different combinations are possible for every servomotor.

Starting point 0
The reference mark A is used. The direction of rotation is anticlockwise. The zeropoint of the air- and gasdamper is on reference mark.
The rotation range of the air damper must be -5° to the desired angle (max. 95°).
The rotation range of gas damper (if exist) must be -5° to 109°.
Stops are to be provided at the rotation range limits.
Mechanical air damper stops:
Lower end between -7° and -10°; upper end between 92° and 95°
Mechanical gas damper stops:
Lower end between -7° and -10°; upper end between 111° and 114°

Starting point 1
The reference mark A is used. The direction of rotation is clockwise. The zeropoint of the airdamper is 90°, the zeropoint of the gasdamper is 109° in rotation anticlockwise of the reference mark away.
The rotation range of the air damper must be 0° to 95°.
The rotation range of the gas damper (if exist) must be 0° to 109°.
Stops are to be provided at the rotation range limits.
Mechanical air damper stops:
Lower end between -2° and -5°; upper end between 97° and 100°
Mechanical gas damper stops:
Lower end between -2° and -5°; upper end between 116° and 119°

Starting point 2
The reference mark B is used. The direction of rotation is clockwise. The zeropoint of the airdamper is 90°, the zeropoint of the gasdamper is 109° in rotation anticlockwise of the reference mark away.
The rotation range of the air damper must be 0° to 95°.
The rotation range of the gas damper (if exist) must be 0° to 109°.
Stops are to be provided at the rotation range limits.
Mechanical air damper stops:
Lower end between -2° and -5°; upper end between 97° and 100°
Mechanical gas damper stops:
Lower end between -2° and -5°; upper end between 116° and 119°

Starting point 3
The reference mark A is used. The direction of rotation is anticlockwise. The zeropoint of the air- and gasdamper is on reference mark.
The rotation range of the air damper must be -5° to the desired angle (max. 95°).
The rotation range of gas damper (if exist) must be -5° to 109°.
Stops are to be provided at the rotation range limits.
Mechanical air damper stops:
Lower end between -7° and -10°; upper end between 92° and 95°
Mechanical gas damper stops:
Lower end between -7° and -10°; upper end between 111° and 114°In the operating modes „oil firing, three stage“ and „gas firing, pneumatic modulation“, the damper stops are required for reasons of safety. In the operating mode „Gas firing, electronic modulation“, an automatic device for recognition of interchanged servomotors is integrated. The stops are required to ensure that this device works properly.

Old documentation - Only for your information!
Product is not available anymore!

Printed in Germany / M-BOS • Edition 03.14 • Nr. 231 763

⚠ Damper stops are required in all operating modes for safety reasons. In the “gas electronic modulation” operating mode, an automatic device is integrated for detecting interchanged actuating drives. Stops are necessary to ensure that this device works properly.

Setting the parameters

Starting point	Reference	Direction of rotation	Damper position at reference		Parameter in EEPROM	Value Display	Input
			airdamper	gasdamper		airdamper	gasdamper
0	A	anticlockwise	0°	0°	0	073	067
1	A	clockwise	90°	109°	8	005	015
2	B	anticlockwise	90°	109°	16	209	219
3	B	clockwise	0°	0°	24	157	151

This setting applies to servomotor air and servomotor gas. If only one servomotor and one coding plug are connected, the setting of the servomotor gas is irrelevant.

⚠ Actuating drives can be mounted on air flaps with the help of starting points 0 and 1 only with presettings on the drive. For this reason, we recommend avoiding these starting points for air flaps.

⚠ If SAD 3.0 IP 40 is used, the limit stops and angle data are changed by the factor 1.0374.

⚠ Only SAD drives of identical design may be connected. A joint operation of SAD.. and SAD.. WG drives is not possible.

See also: Application information on the use of electric actuators "Application Hint Digital Actuators SAD", Item No. 256 750

Old documentation - Only for your information! Product is not available anymore!

Printed in Germany / M-BOS • Edition 03.14 • Nr. 231 763

DUNGS®
Combustion Controls

Operating modes of MPA22

Gas modulating mode (electronic) with stepped motor to control the air and gas volume.

Gas modulating mode (pneumatic) with servomotor air damper control

Oil firing, three stage with oil preheater and servomotor air damper control

Setting the operating mode

The operating mode is set at the servomotor gas connection by means of the coding plug and is checked and identified when the automatic burner control is put into operation.

Old documentation - Only for your information!
Product is not available anymore!

Printed in Germany / M-BOS • Edition 03.14 • Nr. 231 763

Operating mode
Gas firing, electronic modulation

DUNGS®
Combustion Controls

Configuration
Gas firing, electronic modulation

Servomotor air plugged in
Servomotor gas plugged in

Functional sequence
Gas firing, electronic modulation

The internal self-tests are performed when the regulator issues a heating request.
First, the servomotor air locates its reference point, then the servomotor gas.
The servomotor air then moves to pre-ventilation position P9.
The idle position of the air pressure switch is checked and the flame monitoring device is checked for flame simulation. If these checks are successful, the blower is energised.
When the air pressure switch is closed, the preset pre-purge period elapses and the remaining pre-purge period is displayed. Pre-purging is monitored by the air pressure switch.
During the pre-purge period, the servomotor gas runs to position 109° to check whether the servomotors for gas and air have been interchanged.
After the servomotor has reached the 109° position it returns to ignition point P0 during the pre-purge period.
If a valve test has still not been performed after a power failure or fault shut-down and the valve proving function has been selected, a valve test and restart are performed once the pre-purge period has expired.

Otherwise, external valve Y1 (liquid gas) of the servomotor air opens and the servomotor air moves to ignition point P0 after the pre-purge period has expired.
After the servomotor air has reached ignition point P0, the ignition is turned on for the preset pre-purge period (with pre-ignition period = 2 s).
Valve Y2 is opened two seconds before the startup safety period commences (the ignition is also turned on if pre-ignition period = 1s). The gas pressure switch GW_min must indicate the presence of gas pressure within this period of time. Otherwise, a safety shut-down will be triggered and the gas fail-safe program executed.
If gas pressure is present after 2 seconds, the ignition is turned on (if pre-ignition period = 0) and valve Y3 is opened.
The ignition cuts out at the end of the safety period and, provided that a flame is present, the two servomotors remain in the ignition position for the preset stabilising time. After the stabilising time has expired, the servomotors alternately move to position P1 in stepping mode. The burner controller dwells at point P1 for the preset controller enable time. On expiration of the controller enable time, the automatic burner control system is in the operating position.

If the “Lower limit” bu > 0, the automatic burner control operates according to the characteristic curve defined by points P1 to P9, consecutively activating the servomotors until it reaches the predefined minimum capacity point in the closed-loop control mode.
The MPA22 is now in closed-loop control mode, i.e. it accepts the control signals applied to the inputs capacity + and capacity - and thus regulates the capacity over the predefined characteristic curve in the range between bu and bo.
If the MPA22 has already been in service for 24 hours, a controlled shut-down is executed automatically.
If the heating request is cancelled, a controlled shut-down takes place. If the valve proving system is not activated, valves Y2 and Y3 and the external valve Y1 close and the blower runs on for the preset postventilation period.
If the valve proving system is activated, a leakage check is performed on gas valves Y2 and Y3. The post-ventilation period elapses in parallel with the leakage check.

When the blower is switched off, the servomotor air runs to the set standby position and then the servomotor gas runs to position 0°.
A restart lock-out period (if set) now elapses (the time is indicated on the display), or the automatic burner control enters standby mode (readout on display = OFF).

Old documentation - Only for your information!
Product is not available anymore!

Printed in Germany / M-BOS • Edition 03.14 • Nr. 231 763

Response to faults
Gas firing, electronic modulation

If no flame is present after the startup safety period has elapsed, a safety shut-down takes place and the system executes a restart (if permitted). A fault lockout is triggered otherwise.
If the presence of a flame is not indicated after a restart attempt, a fault shut-down takes place and the burner enters the non-variable fault state.
If flame failure occurs when the burner is in operation, the burner is restarted (if permitted). Otherwise, a fault shut-down takes place and the burner enters the non-variable fault state.
In the event of a fault shut-down, all valves are closed and the blower and ignition are turned off.
If the presence of a flame is signalled before the gas is enabled, the automatic burner control enters the non-variable fault state.
If a malfunction occurs during the start-up phase or operating phase, a safety shut-down is activated. Depending upon the nature of the fault, the burner either enters the non-variable fault state or the start-up attempt is repeated.
After 5 failed attempts, the automatic burner control enters the non-variable fault state.
The type of fault or disturbance is displayed.

Gas pressure switching
Gas fail-safe program for gas burners with electronic modulation

The gas pressure switch GW_min is fitted in between gas valves Y2 and Y3.
At burner start-up, valve Y2 is activated 1 second before the startup safety period commences and also 1 s before valve Y3 is opened.
If a pressure sufficient to actuate gas pressure switch GW_min does not build up inside the space between valve Y2 and valve Y3, burner start-up is interrupted. The valves are closed and the blower is switched off. The automatic burner control waits for 2 minutes before repeating the start-up attempt.
If there is a still a shortage of gas after this 2-minute wait, the start-up attempt is repeated a third time after waiting another 2 minutes.
After the third failed start-up attempt, the burner waits for an hour before attempting another restart.
This function makes possible leakage checks and gas pressure monitoring with only one pressure switch. It does not give rise to a fault lockout in the event of a gas shortage and reduces the frequency of start-up attempts if a gas shortage exists over a lengthy period of time.
The gas pressure switch must be set to at least the flow pressure necessary in between the two valves at full load.
Examples of a display during the wait period: 18 1-23 (= 1 minute 23 s remaining waiting time)
The waiting time can only be reset by disconnecting the voltage supply to the device (turn main switch OFF or disconnect the 7-pole connector).

Modulation delay

You have the option of delaying the modulation speed. Make the setting using the EEPROM parameter "Modulation delay". If the value is set to 0, modulation occurs at maximum speed. Values between 1 and 15 reduce the speed. The higher the value, the slower the modulation.
An exact speed cannot be set since the speed is dependent on the position of the setpoints and the number of stepper motors.

Old documentation - Only for your information!
Product is not available anymore!

Printed in Germany / M-BOS • Edition 03.14 • Nr. 231 763

Terminal diagram
Gas firing, electronic modulation

DUNGS®
Combustion Controls

Two servomotors

Both servomotors connected.
Make sure you comply with the burner manufacturer's specifications.

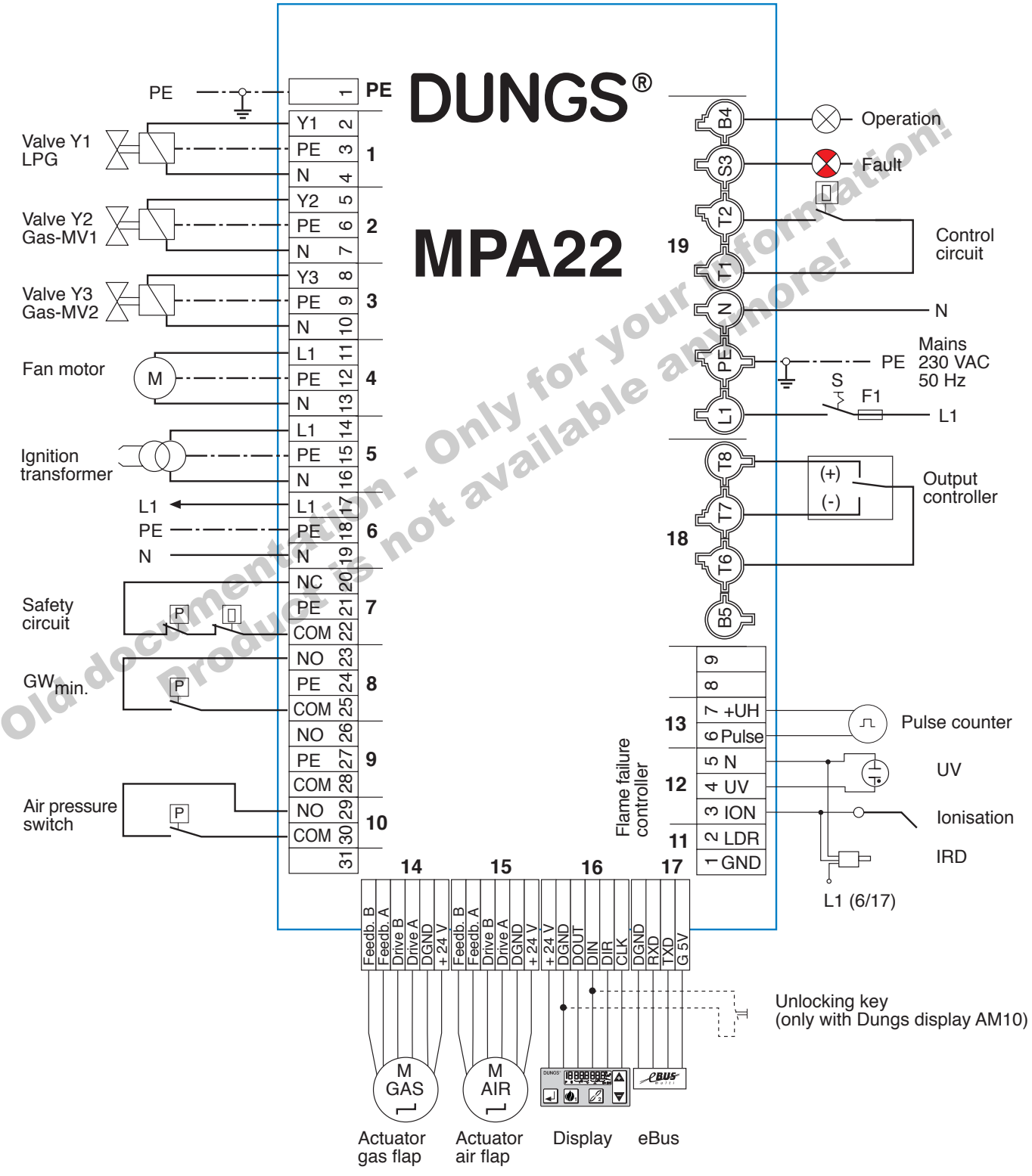

Old documentation - Only for your information!
Product is not available anymore!

Printed in Germany / M-BOS • Edition 03.14 • Nr. 231 763

Operating mode
Gas firing, pneumatic modulation

DUNGS®
Combustion Controls

Configuration
Gas firing, pneumatic modulation

Servomotor air plugged in.
Coding plug gas (yellow) plugged in instead of servomotor.

Functional sequence
Gas firing, pneumatic modulation

The internal self-tests are performed when the regulator issues a heating request.
The servomotor air locates its reference point and then the servomotor air moves to pre-purge position P9.
The idle position of the air pressure switch is checked and the flame monitoring device is checked for flame simulation. If these checks are passed, the blower is energised.
When the air pressure switch is closed, the preset pre-purge period elapses and the remaining pre-purge period is displayed. Pre-purging is monitored by LGW.
If the monitoring function is active, the LGW is completely monitored also in operating mode; otherwise, the input of the LGW is not taken into account.
If a valve test has still not been performed after a power failure or fault shut-down and the valve proving function is selected, a valve test and restart are performed after the pre-purge period has expired.

Otherwise, the external valve Y1 (liquid gas) opens and the servomotor air moves to ignition point P0 after the pre-purge period has expired. After the servomotor air has reached the ignition point P0, the ignition is turned on for the preset pre-purge period (with pre-ignition period = 2 s).
Valve Y2 is opened two seconds before the startup safety period commences (the ignition is also turned on if pre-ignition period = 1s). The gas pressure switch GW_min must indicate the presence of gas pressure within this period of time. Otherwise, a safety shut-down will be triggered and the gas fail-safe program executed.
If gas pressure is present after 2 seconds, the ignition is turned on (if pre-ignition period = 0) and valve Y3 is opened. The ignition is turned off at the end of the safety period and, provided that a flame is present, the servomotor remains in the ignition position for the preset stabilising time. After the stabilising time has expired, the servomotor runs to position P1.
The burner controller dwells at point P1 for the preset controller enable time. On expiration of the controller enable time, the automatic burner control system is in the operating position.
If the MPA22 has already been in service for 24 hours, a controlled shut-down is executed automatically.
If the heating request is cancelled, a controlled shut-down takes place. If the leakage check is not activated, valves Y2, Y3 and the external valve Y1 close and the blower runs on for the preset postventilation period. If the leakage check function is activated, a leakage check is performed on gas valves Y2 and Y3 by means of GW_VPS which is fitted in between valves Y2 and Y3. The postventilation period elapses in parallel with the leakage check. After the blower has been switched off, the servomotor air moves to the preset standby position. A restart lockout time (the time is displayed) now elapses (if set) or the automatic burner control enters standby mode (readout on display = OFF).

Old documentation - Only for your information!
Product is not available anymore!

Response to faults
Gas firing, pneumatic modulation

If no flame is present after the startup safety period has elapsed, a safety shut-down takes place and executes a RESTART (if permitted). A fault lockout is triggered otherwise.
If the presence of a flame is not indicated after a restart attempt, a fault shut-down takes place and the burner enters the non-variable fault state.
If flame failure occurs while the burner is operating, the burner is restarted (if set in the EEPROM). Otherwise, a fault shut-down takes place and the burner enters the non-variable fault state.
In the event of a fault shut-down, all valves are closed and the blower and ignition are turned off.
If the presence of a flame is signalled before the gas is enabled, the automatic burner control enters the non-variable fault state.
If a malfunction occurs during the start-up phase or operating phase, a safety shut-down will be triggered. Depending upon the nature of the fault, the burner either enters the non-variable fault state or the start-up attempt is repeated.
After 5 failed attempts, the automatic burner control enters the non-variable.

Printed in Germany / M-BOS • Edition 03.14 • Nr. 231 763

Gas pressure switching
Gas fail-safe program for gas burners with pneumatic modulation

Gas pressure switch GW_min is fitted upstream of the two gas valves of the Ratio control.
If a pressure sufficient to actuate gas pressure switch GW_min does not build up one second before the startup safety period commences, burner start-up is interrupted. The valves are closed and the blower is switched off. The automatic burner control waits for 2 minutes before repeating the start-up attempt.
If there is a still a shortage of gas after this 2-minute wait, the start-up attempt is repeated a third time after waiting another 2 minutes.
After the third failed start-up attempt, the burner waits for an hour before attempting another restart.
This function does not give rise to a fault lockout in the event of a gas shortage and reduces the frequency of start-up attempts if a gas shortage exists over a lengthy period of time.

Examples of a display during the wait period: 18 1-23 (= 1 minute 23 s remaining waiting time)

The waiting time can only be reset by disconnecting the voltage supply to the device (turn main switch OFF or disconnect the 7-pole connector).

Modulation delay

You have the option of delaying the modulation speed. Make the setting using the EEPROM parameter "Modulation delay". If the value is set to 0, modulation occurs at maximum speed. Values between 1 and 15 reduce the speed. The higher the value, the slower the modulation.
An exact speed cannot be set since the speed is dependent on the position of the setpoints.

Old documentation - Only for your information!
Product is not available anymore!

Printed in Germany / M-BOS • Edition 03.14 • Nr. 231 763

Terminal diagram
Gas firing, pneumatic modulation

DUNGS®
Combustion Controls

Coding plug
Gas firing, pneumatic modulation

Coding plug (yellow) “gas pneumatic” plugged in instead of “servomotor gas”.
Make sure you comply with the burner manufacturer’s specifications.

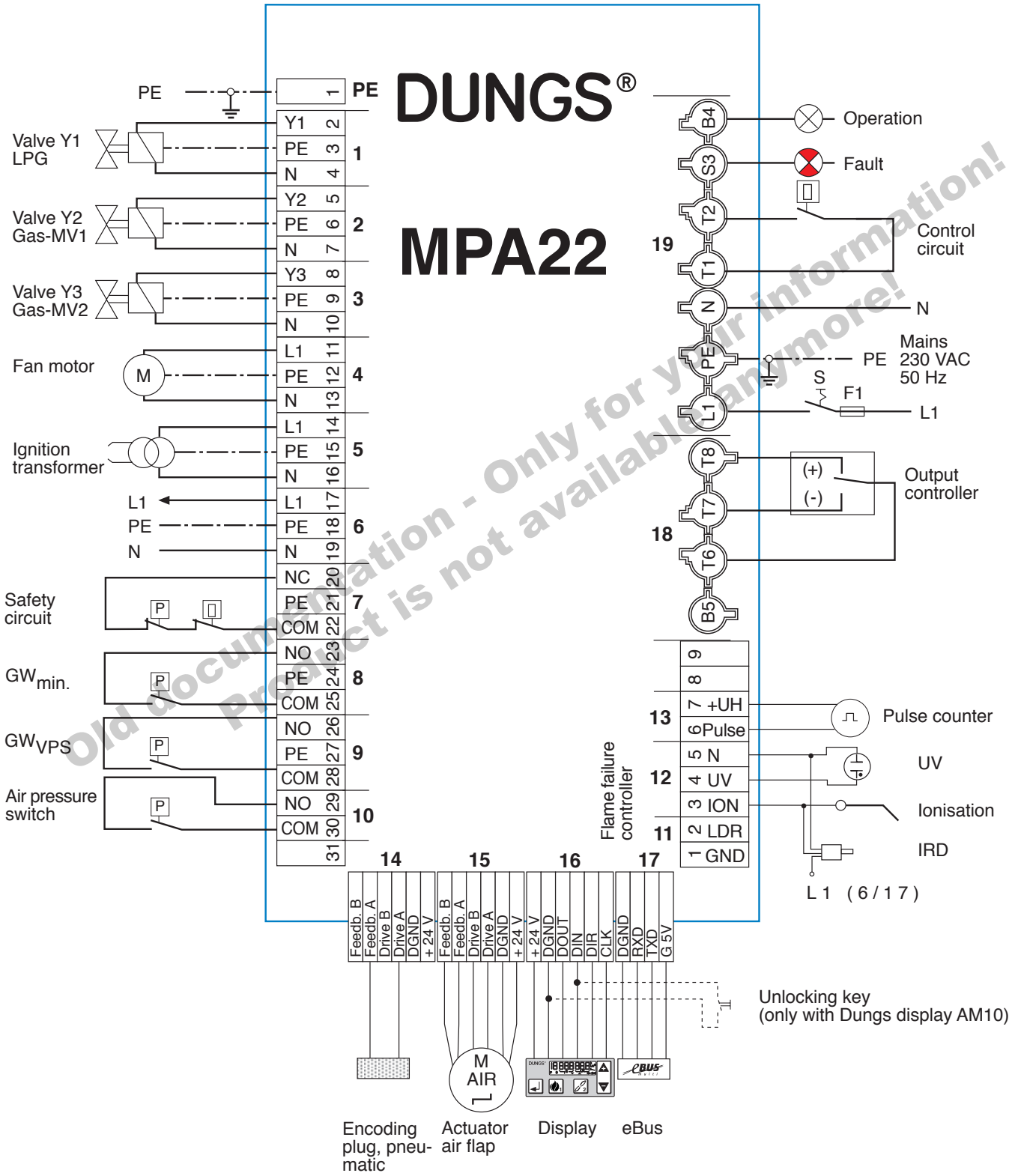

Old documentation - Only for your information!
Product is not available anymore!

Printed in Germany / M-BOS • Edition 03.14 • Nr. 231 763

DUNGS®
Combustion Controls

Configuration
Oil firing, three stage

Servomotor air plugged in
Coding plug oil (black) plugged in instead of servomotor gas.

Functional sequence
Oil firing, three stage

The internal self-tests are performed when the regulator issues a heating request.
The servomotor air locates its reference point and then the servomotor air moves to preventilation position P9. Once the servomotor reaches this position, a 5-second delay commences.
The air pressure switch is checked for idle state and the flame monitoring device is checked for flame simulation. If these checks are passed, the blower and the ignition are turned on.
The preset pre-purge period elapses and the remaining pre-purge period is displayed. If the switch function has been activated, the preventilation cycle is monitored 3 s after switching on the blower. To ensure that the preventilation cycle is executed at the max. possible flow rate, the desired time should be increased by 3 s in the EEPROM. Once the pre-purge period elapses, the servomotor air moves to ignition point P0 and dwells there for 2 seconds, opens valve Y1 and (if exist) an additional pre-valve connected in parallel with Y1.
The ignition cuts out at the end of the preset safety period and, provided that a flame is present, the servomotor air dwells in the ignition position for the preset stabilizing time. When the watchdog function is activated, oil pressure switch input (GW_min) is monitored after the valve opens. If you want to monitor the air pressure but not the gas pressure, a bridge can be attached to inlet GW_min as a substitute.

After the stabilising time elapses, the servomotor air moves to position P1 (stage 1). The burner controller dwells at point P1 for the preset controller enable time. On expiration of the controller enable time, the automatic burner control system accepts the signals applied to the capacity control inputs for the second and third stages (Stage 2 and Stage 3).

Changeover from the first stage to the second stage takes place within 6 s after the contact of the second stage closes. The servomotor air moves to the second stage P3 via changeover point P2 within t < 3 s, and valve Y2 (second stage) is connected when the servomotor passes the changeover point.

Changeover from the second stage to the third stage takes place within 6 s after the contact of the third stage closes. The servomotor air moves to the third stage P9 via changeover point P4 within t < 3 s, and valve Y3 (third stage) is connected when the servomotor passes the changeover point.

Changeover to the next lower stage is implemented in the reverse order.
Once a changeover has been initiated it is completed.
If the MPA22 has already been in service for 24 hours, a controlled shut-down is executed automatically.
If the heating request is cancelled, a controlled shut-down takes place. Valves Y1, Y2 and Y3 close and the blower runs on for the preset postventilation period.
After the blower has been switched off, the servomotor air moves to the preset standby position. A restart lockout time (the time is displayed) now elapses (if set) or the automatic burner control enters standby mode (display = OFF).

Old documentation. Only for your information!
Product is not available anymore!

Printed in Germany / M-BOS • Edition 03.14 • Nr. 231 763

Response to faults Oil firing, three stage

If no flame is present after the startup safety period has elapsed, the burner enters the non-variable fault state.
If flame failure occurs while the burner is operating, a fault shut-down takes place and the system executes a restart. If the presence of a flame is not signalled, the system enters the non-variable fault state.
In the event of a fault shut-down, all valves are closed and the blower and ignition are turned off.
If the presence of a flame is signalled before the gas is enabled, the automatic burner control enters the non-variable fault state.
The type of fault or disturbance is displayed.
If air pressure switch failure is detected during the startup period, provided the watchdog function is activated, a safety shut-down takes place and 5 restart attempts are performed; if this occurs when the burner is operating, the automatic burner control enters the non-variable fault state.
If the oil pressure drops, the automatic burner control enters the non-variable fault state.

Old documentation - Only for your information!
Product is not available anymore!

Printed in Germany / M-BOS • Edition 03.14 • Nr. 231 763

Terminal diagram
Oil firing, three stage

DUNGS®
Combustion Controls

Coding plug
Oil firing, three stage

Coding plug (black) „oil firing, three stage“ plugged in instead of “servomotor gas”.
Make sure you comply with the burner manufacturer’s specifications.

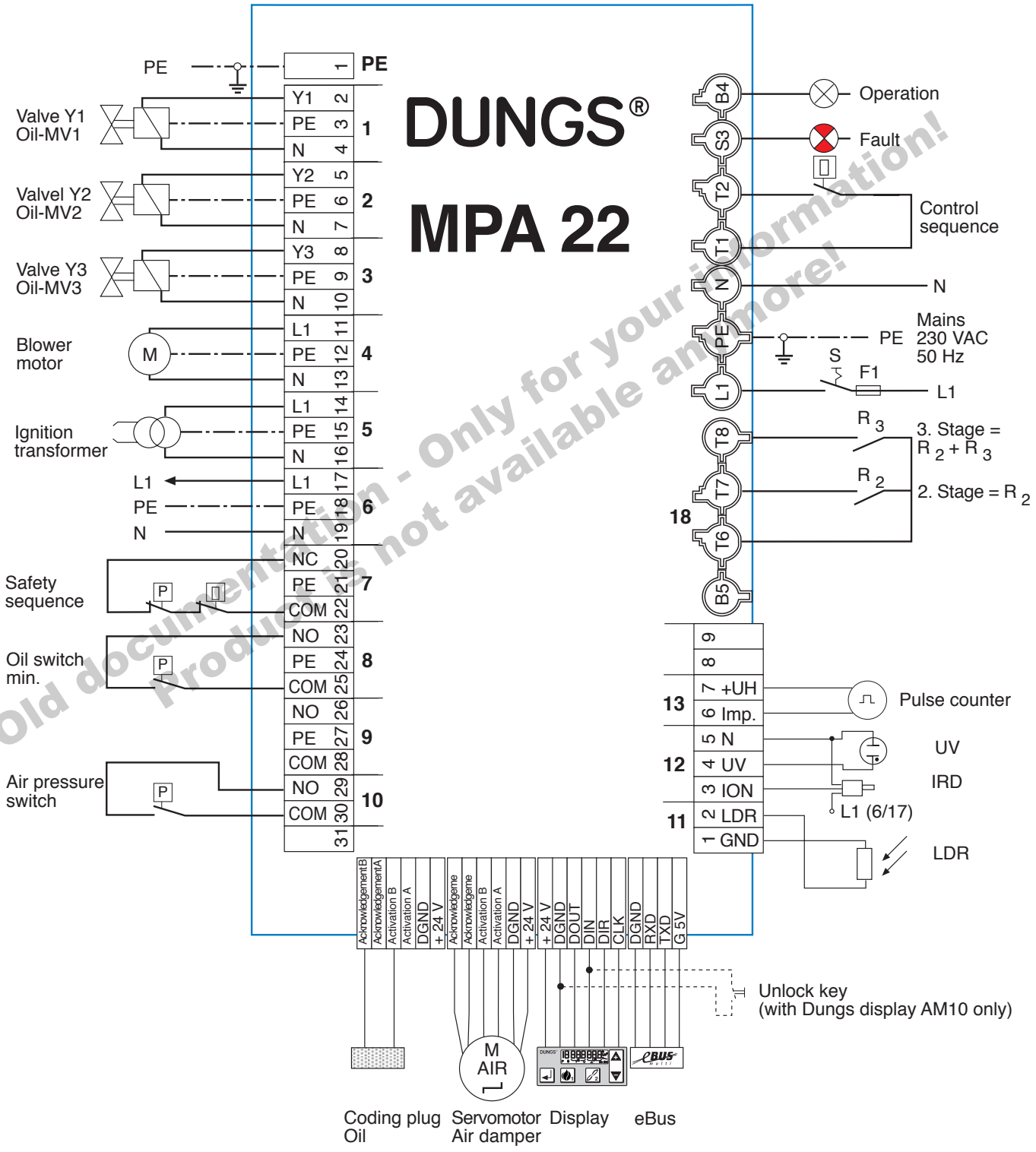

Old documentation - Only for your information!
Product is not available anymore!

Printed in Germany / M-BOS • Edition 03.14 • Nr. 231 763

Valve test, gas burner

The valve proving function can be enabled or disabled in parameterisation mode.

After a power supply failure or a fault interlock deactivation, the system carries out gas valve proving before the burner is restarted. Otherwise, the valves are proved after a controlled burner shut-down.

Gas burner, electronic modulation

Only a gas pressure switch is used to check the gas valves for leaks and monitor the minimum gas pressure. The gas pressure switch must be connected in the circuit between valve Y2 (Safety valve V1) and valve Y3 (Burner valve V2). A leakage check can thus be performed without the need for additional devices.

Gas burner, pneumatic modulation

A separate gas pressure switch (GW_VPS) is required to test the gas valves for leaks. The gas pressure switch must be connected in the circuit between valve Y2 and valve Y3.

Functional sequence

After a controlled shut-down, valve Y3 is closed after a 2-second delay. The external valve Y1 remains open. The test section is thus rendered pressureless. The gas pressure switch must have switched off (open). Test period t_{Y1} for the valve (Y2) on the gas side now commences.
During the test period, a pressure sufficient to activate the gas pressure switch must not build up inside the test section, otherwise a fault shut-down will take place and the fault code for “valve 1 leaky” displayed shown on the display.
At the end of proving time t_{V1}, valve Y2 opened for 3 s. The gas pressure switch must switch over within this period of time and indicate the presence of gas pressure, otherwise all valves are closed and the gas fail-safe program is executed.
Once the period of time has elapsed, valve Y2 and the external pilot valve are closed.
During the test period for valve Y3, a pressure drop below the operating point of the preset minimum gas pressure must not occur, otherwise a fault shut-down will take place and the fault code for “valve 2 leaky” displayed shown on the display.

Old documentation - Only for your information!
Product is not available anymore!

Attention! Valve/valves leaking

1. Switch off system
2. Check valve V1 and/or V2 for leakage
3. If leaking, replace valve V1 and/or V2.

Attention! In case of interference suppression, always observe the application- and country-specific requirements as well.

Test times for valve Y2 and valve Y3 are derived from:

- The volume of gas trapped in between valve Y2 and valve Y3
- The preset pressure switching points
- The gas mains pressure applied
- The permissible leakage rate

Rule-of-thumb equations for calculating times for the valve proving system, if the gas pressure switch is set to half flow pressure

$$p_{GW} = \frac{p_e}{2}$$

To meet the requirement that the gas pressure switch for valve monitoring is set to half flow pressure, use the following rule-of-thumb equation to calculate the test period for t_{V1} and $t_{V2.}$

$$t_{V1,V2} = \frac{p_e \bullet V_p \bullet 3}{\dot{V}_p}$$

$t_{V1,V2}$ [S] = Test period setting in seconds.
The calculated value is valid for the test periods t_{V1} and t_{V2}.
Both periods should be set with the same value. The periods should be rounded up to whole seconds!

Printed in Germany / M-BOS • Edition 03.14 • Nr. 231 763

p_e [mbar] Gas pressure at VPS measuring point.
When the controller is positioned upstream of the solenoid valves, or with multiple actuators where the controller is located on the axis of the first valve, the controller output pressure P_a is decisive.

Figure 3 Factor for conversion values, dimensions and safety margins.

V_p [dm³] Volumes between gas valves monitored gas valves (test volumes)
When the valves are arranged separatly, pay attention to the connecting pipe!
With double solenoid valves (DMV) and multiple actuators (MB, MB-VEF, DMV-SE, DMV-VEF), the valve volume is cla culated from Y2 (V1) on the outlet side and Y3 (V2) on the inlet side.

$\dot{V}_p$ [dm³] Leakage rate to EN 1643.
where $\dot{V}$ (gas flow) = or < 50 m³/h is $\dot{V}_p$ = 50 dm³/h
where $\dot{V}$ > 50 m3/h is equivalent to $\dot{V}_p$ = nominal valve diameter (DN) e.g. $\dot{V}_p$ = 80 dm³/h for DN 80

Calculation example:
p_e = 200 mbar (value setting GW = 100 mbar), V_p = 1,7 dm³ (DMV 5080), V_p = 100 m³/h, V_p = 100 dm³/h

$$t_{V1,V2} = \frac{200 \bullet 1{,}7 \bullet 3}{100} = 10{,}2 \text{ s} \rightarrow 11 \text{ s}$$

Rule-of-thumb equation for calculating periods for the valve proving system, if the gas pressure switch cannot be set to hold flow pressure.

The value settings obtained tV1 and tV2 must be set for the test periods of valves Y2 and Y3 using the parameterising mode.

$$t_{V2} = \frac{V_p \bullet p_e \bullet \ln\left(\frac{p_e}{p_e - p_{Sein}}\right) \bullet 3600}{p_{atm} \bullet \dot{V}_p}$$

$$t_{V1} = \frac{V_P \bullet p_e \bullet \ln\left(\frac{p_e}{p_{Sein}}\right) \bullet 3600}{p_{atm} \bullet \dot{V}_p}$$

t_{V1} [s] = Set test period for valve Y2 in seconds.
The periods should be rounded up to whole seconds!

t_{V2} [s] = Set test period for valve Y3 in seconds.
The periods should be rounded up to whole seconds!

p_e [mbar] Gas pressure at the VPS measuring point.
When the controller is positioned before the solenoid valves or for multiple actuators, where the controller is found on the axis of the first valve, the controller output pressure P_a is important.

V_p [dm³] Volumes between gas valves monitored
(test volumes) see page 25.
If the valves are arranged separately, pay attention to the connecting pipe! With double solenoid valves (DMV) and multiple actuators (MB, MB-VEF, DMV-SE, DMV-VEF), the valve volume is calculated from V1 on the outlet side and V2 on the inlet side.

Old documentation - Only for your information!
Product is not available anymore!

Printed in Germany / M-BOS • Edition 03.14 • Nr. 231 763

$\dot{V}_p$ [dm³] Leakage rate to EN 1643.
where $\dot{V}$ (gas flow) ≤ 50 m³/h is $\dot{V}_p$ = 50 dm³
where $\dot{V}$ > 50 m3/h is equivalent to $\dot{V}_p$ = nominal valve diameter (DN) e.g. $\dot{V}_p$ = 80 m³ for DN 80

p_{Sein} [mbar] Increasing switching pressure (set pressure on the monitor +15 % + switching difference)

p_{Saus} [mbar] Decreasing switching pressure (set pressure on the monitor -15 %)

p_{Saus} [mbar] Atmospheric pressure = 1013 mbar

Calculation example DMV-SE 520/11:
pe = 100 mbar, switching pressure of gas monitor 5 mbar ± 15 %, switching difference 2,5 mbar $\dot{V}_p$ = 50 dm³/h, V_p = 0,25 dm³

$$t_{V1} = \frac{0{,}25 \bullet 100 \bullet \ln\left(\frac{100}{100\text{-}8{,}25}\right) \bullet 3600}{1013 \bullet 50} = 0{,}153 \rightarrow = 1\ \text{s (aufgerundet)}$$

$$t_{V2} = \frac{0{,}25 \bullet 100 \bullet \ln\left(\frac{100}{4{,}25}\right) \bullet 3600}{1013 \bullet 50} = 5{,}61 \rightarrow = 6\ \text{s (aufgerundet)}$$

The value settings obtained tv1 (Y2) and tv2 (Y3) must be set for the test periods of valves Y2 and Y3 using the parameterising mode.

Old documentation - Only for your information!
Product is not available anymore!

Printed in Germany / M-BOS • Edition 03.14 • Nr. 231 763

Test volumes of Dungs multiple actuators and pipelines required for calculating the times

Type	Nominal width Rp/DN	Test volumes [dm³]
DMV-D(LE) 507/11	Rp 3/4	0,09
DMV-D(LE) 512/11	Rp 1 1/4	0,25
DMV-D(LE) 520/11	Rp 2	0,25
DMV-D(LE) 525/11	Rp 2	0,60
DMV-D(LE) 5040/11	DN 40	0,36
DMV-D(LE) 5050/11	DN 50	0,36
DMV-D(LE) 5065/11	DN 65	0,60
DMV-D(LE) 5080/11	DN 80	1,70
DMV-D(LE) 5100/11	DN 100	2,30

The test volumes are analogue for the DMV-SE range.

Typ	Nominal width Rp/DN	Test volumes [dm³]
MB-VEF 407	Rp 3/4	0,12
MB-VEF 412	Rp 1 1/4	0,28
MB-VEF 415	Rp 1 1/2	0,25
MB-VEF 420	Rp 2	0,25
MB-VEF 425	Rp 2	0,60

Old documentation - Only for your information! Product is not available anymore!

When using individual valves …/5 (e.g. MVD/5), add the outlet side volume of the first valve to the inlet side volume of the second valve. If the valves are connected by a pipe, also add the length of the pipe to this. The table below gives some total volumes.

Nominal width Rp/DN	Valve volumes $V1_{\text{outlet side}}$ + $V2_{\text{inlet side}}$	Total test volume (including a pipe length of) in [dm³]			
		0,5 m	1 m	1,5 m	2 m
Rp 1/2	0,07 dm³	0,17	0,27	0,37	0,47
Rp 3/4 (DN 20)	0,12 dm³	0,27	0,42	0,57	0,72
Rp 1 (DN 25)	0,20 dm³	0,45	0,70	0,95	1,20
Rp 1 1/2 (DN 40)	0,50 dm³	1,15	1,80	2,45	3,10
Rp 2 (DN 50)	0,90 dm³	1,90	2,90	3,90	4,90
DN 65	2,00 dm³	3,70	5,40	7,00	8,60
DN 80	3,30 dm³	5,80	8,30	10,90	13,40

Printed in Germany / M-BOS • Edition 03.14 • Nr. 231 763

Time diagram
Gas firing, electronic modulation

DUNGS®
Combustion Controls

Start and controlled shut-down with flame and active valve proving system
Test already performed at last controlled shut-down

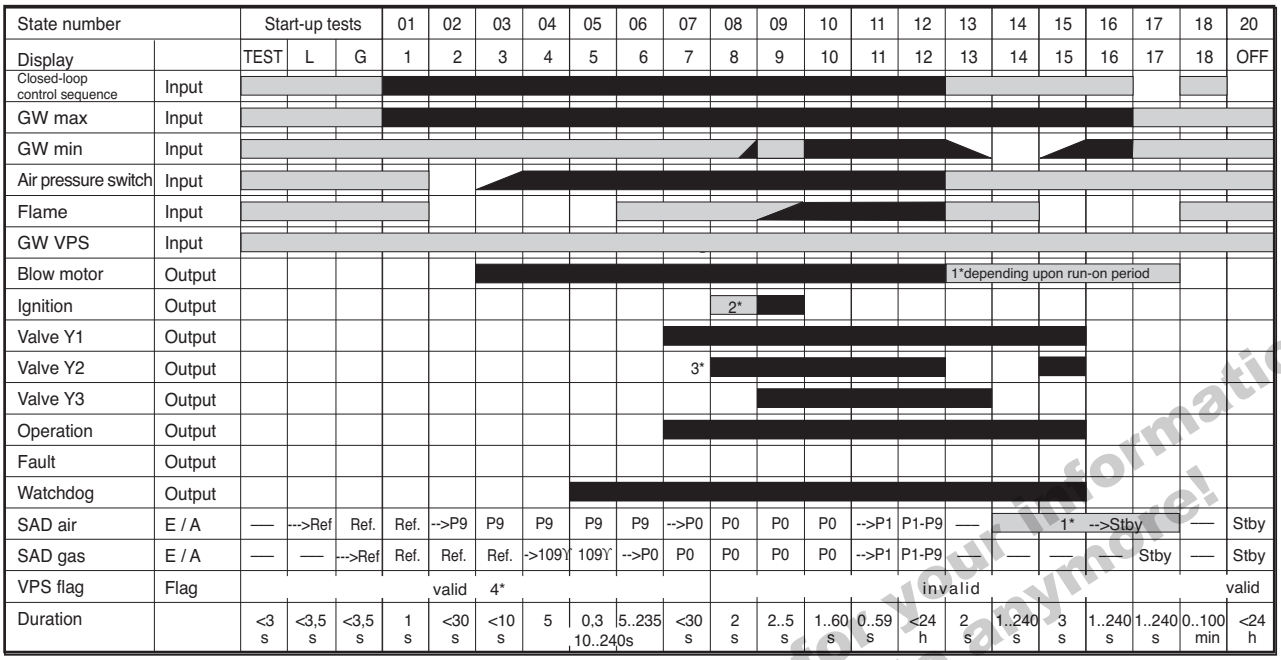

Time diagrams for MPA22 gas burner, electronic modulation

Definitions of individual states

Start-up tests	Processor and program memory test/move servomotor to reference point
State 01	Start-up decision (heating request issued)
State 02	Idle state check, blower
State 03	Blower start-up
State 04	Pre-ventilation / move servomotor gas over full rotational range
State 05	Pre-ventilation / energize and test watchdog
State 06	Pre-ventilation / move servomotor gas to ignition position
State 07	Move servomotor air to ignition position
State 08	Pre-ignition (depending upon parameters)
State 09	Start-up safety period
State 10	Stabilising time
State 11	Move servomotor from ignition point to operating characteristic, controller enable time
State 12	Operation
State 13	Evacuate VPS valve space / (postventilation)
State 14	Test time Y2 / (remaining postventilation time)
State 15	Fill VPS valve space / (remaining postventilation time)
State 16	Test time Y3 / (remaining postventilation time)
State 17	Remaining postventilation time
State 18	Restart lockout time / wait time loop for gas fail-safe function
State 20	Start-up wait state (standby)
State 21	Postventilation before error

Footnotes:

1* The blower runs during the leakage test until the postventilation period elapses. The servomotor air then enters standby state.

2* The pre-ignition cycle is started 0, 1 or 2 s before the start-up safety period commences, depending on the setting in the EEPROM.

3* Valve Y2 (SV) always opens 2s before the start-up safety period commences so the GWmin can detect the presence of gas pressure.

4* After a controlled shut-down a leakage test is performed on the valves, provided the VPS is active. The VPS flag is then set to „valid“. If the VPS flag is invalid, e.g. after a power outage or safety shut-down in state 08 to 16, the leakage test is performed before the main valves are opened.

Old documentation - Only for your information! Product is not available anymore!

Printed in Germany / M-BOS • Edition 03.14 • Nr. 231 763

Time diagram
Gas firing, electronic modulation

DUNGS®
Combustion Controls

Start without flame after start-up safety period
1 restart permitted, valve proving system inactive

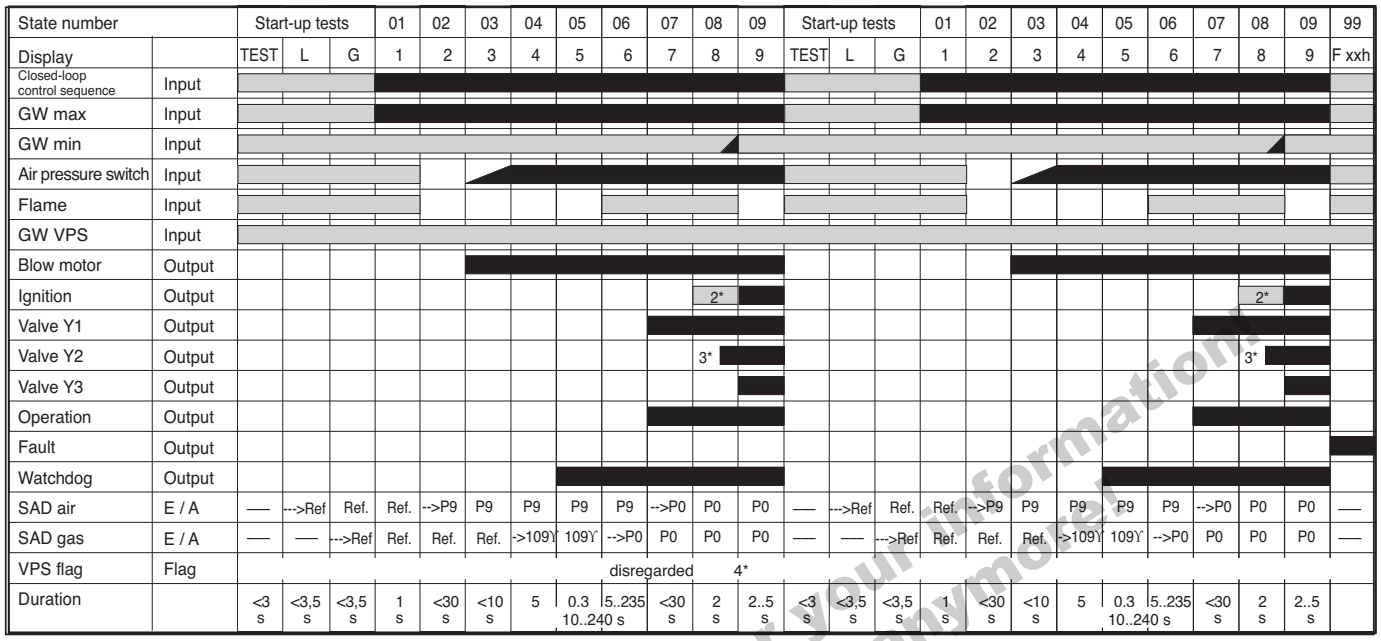

Flame failure during operation
1 restart permitted, valve proving system inactive

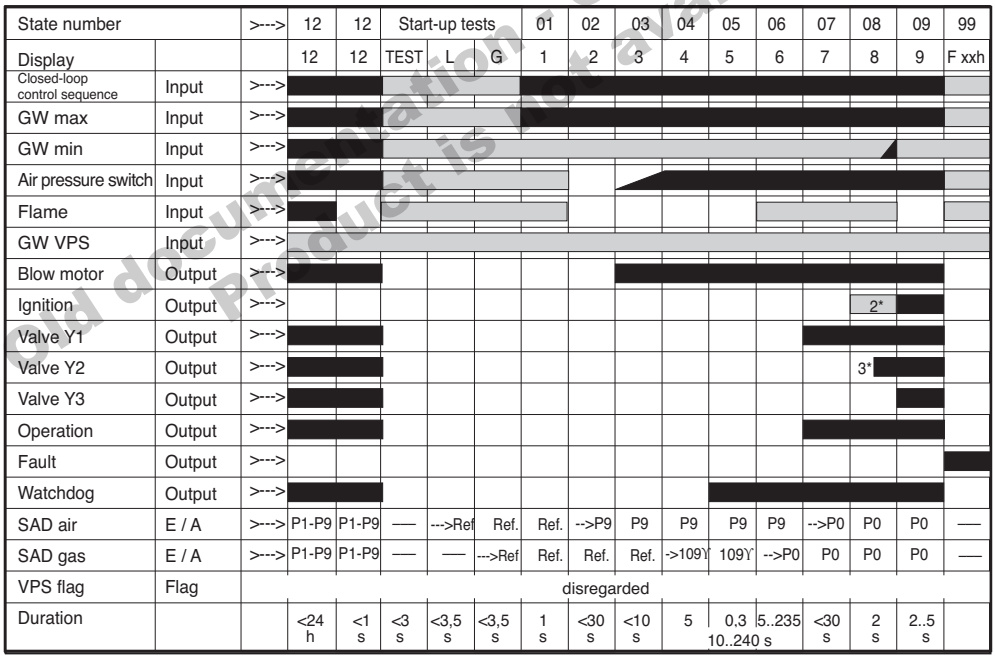

Old documentation - Only for your information!
Product is not available anymore!

No input signal / Output disabled

Input signal undefined or ignored

Input signal present / Output enabled

X* Output status depends on configuration

Printed in Germany / M-BOS • Edition 03.14 • Nr. 231 763

Time diagram
Gas firing, pneumatic modulation

DUNGS®
Combustion Controls

Start and controlled shut-down with flame and valve proving system active
Test performed during previous controlled shut-down

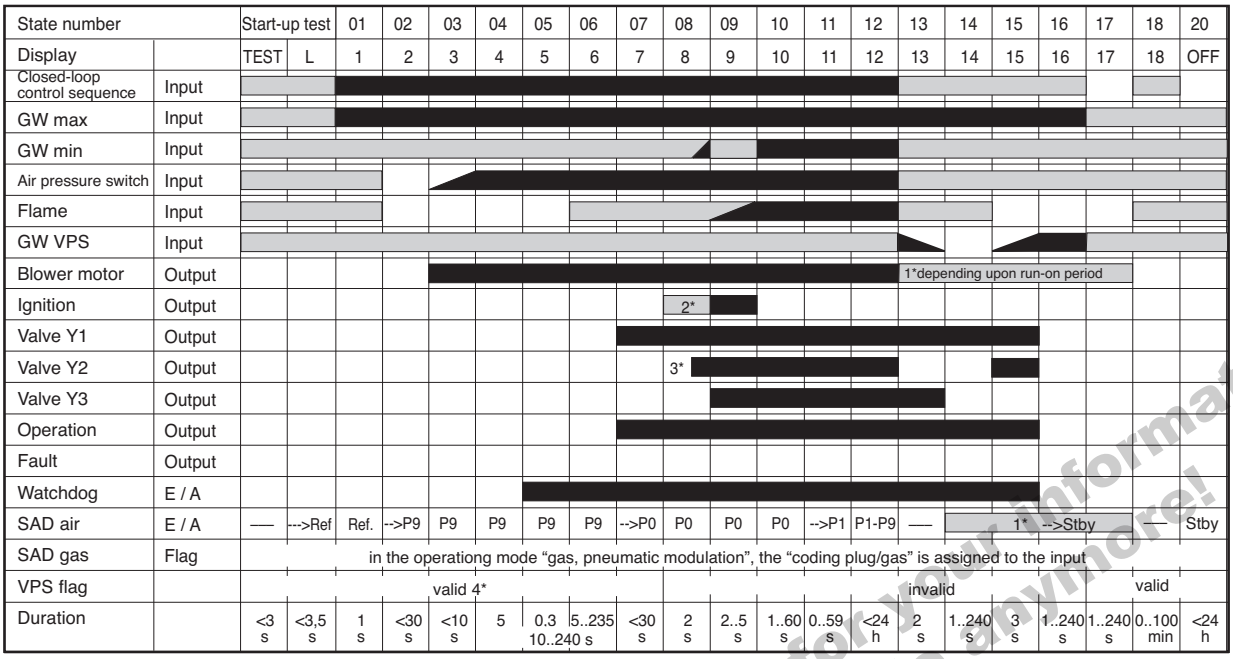

Definitions of individual states

Start-up tests	Processor and program memory test/move servomotor to reference point
State 01	Start-up decision (heating request issued)
State 02	Idle state check, blower
State 03	Blower start-up
State 04	Pre-ventilation
State 05	Pre-ventilation / energize and test watchdog
State 06	Pre-ventilation
State 07	Move servomotor air to ignition position
State 08	Pre-ignition (depending upon parameters)
State 09	Start-up safety period
State 10	Stabilising time
State 11	Move servomotor from ignition point to operating characteristic, controller enable time
State 12	Operation
State 13	Evacuate VPS valve space / (postventilation)
State 14	Test time Y2 / (remaining postventilation time)
State 15	Fill VPS valve space / (remaining postventilation time)
State 16	Test time Y3 / (remaining postventilation time)
State 17	Remaining postventilation time
State 18	Restart lockout time / wait time loop for gas fail-safe function
State 20	Start-up wait state (standby)

Footnotes:

1* The blower runs during the leakage test until the postventilation period elapses. The servomotor air then enters standby state.

2* The pre-ignition cycle is started 0, 1 or 2 s before the start-up safety period commences, depending on the setting in the EEPROM.

3* Valve Y2 (SV) always opens 2s before the start-up safety period commences so the GWmin can detect the presence of gas pressure.

4* After a controlled shut-down a leakage test is performed on the valves, provided the VPS is active. The VPS flag is then set to „valid“. If the VPS flag is invalid, e.g. after a power outage or safety shut-down in state 08 to 16, the leakage test is performed before the main valves are opened.

Old documentation - Only for your information! Product is not available anymore!

Printed in Germany / M-BOS • Edition 03.14 • Nr. 231 763

Time diagram
Gas firing, pneumatic modulation

DUNGS®
Combustion Controls

Start without flame after start-up safety period
1 restart permitted, valve proving system inactive

State number		Start-up tests		01	02	03	04	05	06	07	08	09	Start-up tests		01	02	03	04	05	06	07	08	09	99
Display		TEST	L	1	2	3	4	5	6	7	8	9	TEST	L	1	2	3	4	5	6	7	8	9	F xxh
Closed-loop control sequence	Input																							
GW max	Input																							
GW min	Input																							
Air pressure switch	Input																							
Flame	Input																							
GW VPS	Input																							
Blower motor	Output																							
Ignition	Output										2*											2*		
Valve Y1	Output																							
Valve Y2	Output										3*											3*		
Valve Y3	Output																							
Operation	Output																							
Fault	Output																							
Watchdog	Output																							
SAD air	E / A	—	Ref.	Ref.	-->P9	P9	P9	P9	P9	-->P0	P0	P0	—	--->Ref	Ref.	-->P9	P9	P9	P9	P9	-->P0	P0	P0	—
SAD gas	E / A	In the operating mode □gas, pneumatic modulation□, the □coding plug/gas□ is assigned to the input																						
VPS flag	Flag	disregarded 4*																						
Duration		<3 s	<3,5 s	1 s	<30 s	<10 s	5	0.3 10..240 s	5..235	<30 s	2 s	2..5 s	<3 s	<3,5 s	1 s	<30 s	<10 s	5	0.3 10..240 s	5..235	<30 s	2 s	2..5 s	

Flame failure during operation
1 restart permitted, valve proving system inactive

State number		>--->	12	12	Start-up tests	01	02	03	04	05	06	07	08	09	99
Display			12	12	TEST	L	1	2	3	4	5	6	7	8	9	F xxh
Closed-loop control sequence	Input	>--->														
GW max	Input	>--->														
GW min	Input	>--->														
Air pressure switch	Input	>--->														
Flame	Input	>--->														
GW VPS	Input	>--->														
Blower motor	Output	>--->														
Ignition	Output	>--->												2*		
Valve Y1	Output	>--->														
Valve Y2	Output	>--->												3*		
Valve Y3	Output	>--->														
Operation	Output	>--->														
Fault	Output	>--->														
Watchdog	Output	>--->														
SAD air	E / A	>--->	P1-P9	P1-P9	—	--->Ref	Ref.	-->P9	P9	P9	P9	P9	-->P0	P0	P0	—
SAD gas	E / A	In the operating mode “gas, pneumatic modulation”, the coding plug/gas” is assigned to the input														
VPS flag	Flag	disregarded														
Duration			<24 h	<1 s	<3 s	<3,5 s	1 s	<30 s	<10 s	5	0.3 10..240 s	5..235	<30 s	2 s	2..5 s	2 s

Old documentation - Only for your information!
Product is not available anymore!

No input signal / Output disabled

Input signal undefined or ignored

X* Input signal present / Output enabled

Output status depends on configuration

Printed in Germany / M-BOS • Edition 03.14 • Nr. 231 763

Time diagram
Oil firing, three stage

DUNGS®
Combustion Controls

Start and controlled shut-down with flame
Watchdog function active

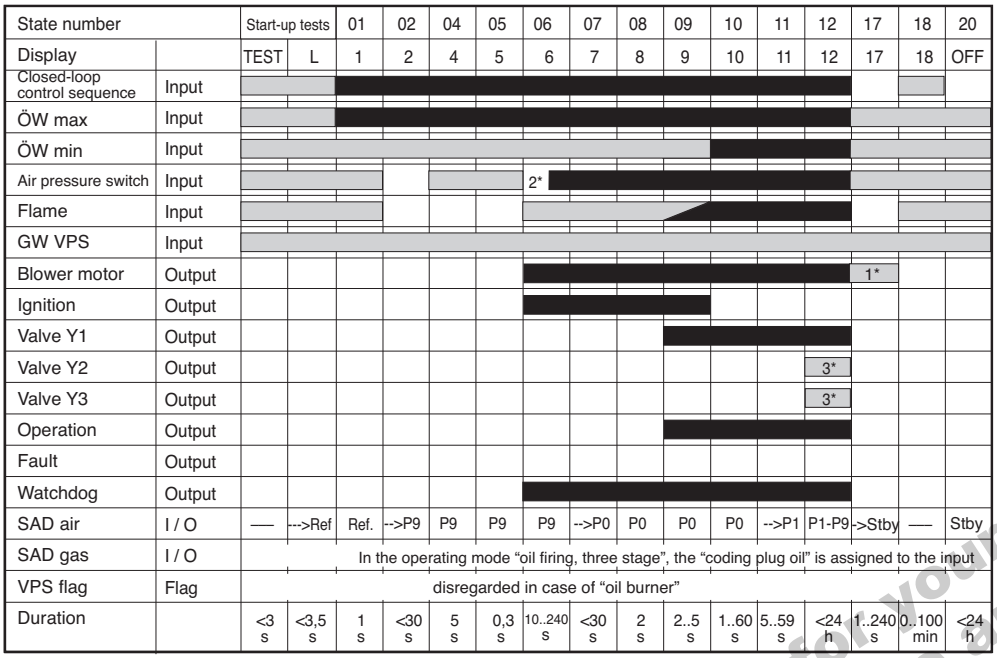

Definitions of individual states

Start-up tests	Processor and program memory test/move servomotor to reference point
State 01	Start-up decision (heating request issued)
State 02	Idle state check, blower
State 03	not used
State 04	Pre-ventilation
State 05	Pre-ventilation / energize and test watchdog
State 06	Pre-ventilation
State 07	Move servomotor air to ignition position
State 08	Waiting time in ignition position
State 09	Start-up safety period
State 10	Stabilising time
State 11	Move servomotor from ignition point to first stage, controller enable time
State 12	Operation
State 17	Remaining postventilation time
State 18	Restart lockout time
State 20	Start-up wait state (standby)

Footnotes:

1* The blower runs during the leakage test until the postventilation period elapses. The servomotor air then enters standby state.

2* The blower starts with State 06 and has 3s for start-up. The air pressure is now monitored, provided that the watchdog function is active.
=> To ensure that the pre-purge is performed at the max. possible flowrate, the pre-purge period should be increased by 3s in the EEPROM.

3* Valve Y2 is activated in stage 2 and valves Y2 + Y3 are activated in stage 3 depending on power input demand or eBUS default and air damper position.

4* Safety sequence

Old documentation - Only for your information! Product is not available anymore!

Printed in Germany / M-BOS • Edition 03.14 • Nr. 231 763

Time diagram
Oil firing, three stage

DUNGS®
Combustion Controls

Start without flame after start-up safety period

State number		Start-up tests		01	02	04	05	06	07	08	09	99
Display		TEST	L	1	2	4	5	6	7	8	9	F xxh
Closed-loop control sequence	Input											
ÖW max	Input											
ÖW min	Input											
Air pressure switch	Input							2*				
Flame	Input											
GW VPS	Input											
Blower motor	Output											
Ignition	Output											
Valve Y1	Output											
Valve Y2	Output											
Valve Y3	Output											
Operation	Output											
Fault	Output											
Watchdog	Output											
SAD air	I / O	—	Ref.	Ref.	-->P9	P9	P9	P9	-->P0	P0	P0	—
SAD gas	I / O	In the operating mode “oil firing, three stage”, the coding plug oil” is assigned to the input										
VPS flag	Flag	disregarded in case of “oil boiler”										
Duration		<3 s	<3,5 s	1 s	<30 s	5 s	0,3 s	10..240 s	<30 s	2 s	2..5 s	

Flame failure during operation

State number		>--->	12	12	Start-up tests		01	02	04	05	06	07	08	09	99
Display			12	12	TEST	L	1	2	4	5	6	7	8	9	F xxh
Closed-loop control sequence	Input	>--->													
ÖW max	Input	>--->													
ÖW min	Input	>--->													
Air pressure switch	Input	>--->									2*				
Flame	Input	>--->													
GW VPS	Input	>--->													
Blower motor	Output	>--->													
Ignition	Output	>--->													
Valve Y1	Output	>--->													
Valve Y2	Output	>--->	3*												
Valve Y3	Output	>--->	3*												
Operation	Output	>--->													
Fault	Output	>--->													
Watchdog	Output	>--->													
SAD air	I / O	>--->	P1-P9	P1-P9	—	-->Ref	Ref.	-->P9	P9	P9	P9	-->P0	P0	P0	—
SAD gas	I / O	In the operating mode “oil firing, three stage”, the “coding plug oil” is assigned to the input													
VPS flag	Flag	disregarded in case of “oil burner”													
Duration			<24 h	<1 s	<3 s	<3,5 s	1 s	<30 s	5 s	0,3 s	10..240 s	<30 s	2 s	2..5 s	

Old documentation - Only for your information!
Product is not available anymore!

No input signal / Output disabled

Input signal undefined or ignored

X* Input signal present / Output enabled

Output status depends on configuration

Printed in Germany / M-BOS • Edition 03.14 • Nr. 231 763

DUNGS®
Combustion Controls

Display elements

The MPA22 is controlled by means of 5 buttons on the touch-sensitive display. The individual parameters are displayed on the liquid-crystal display.

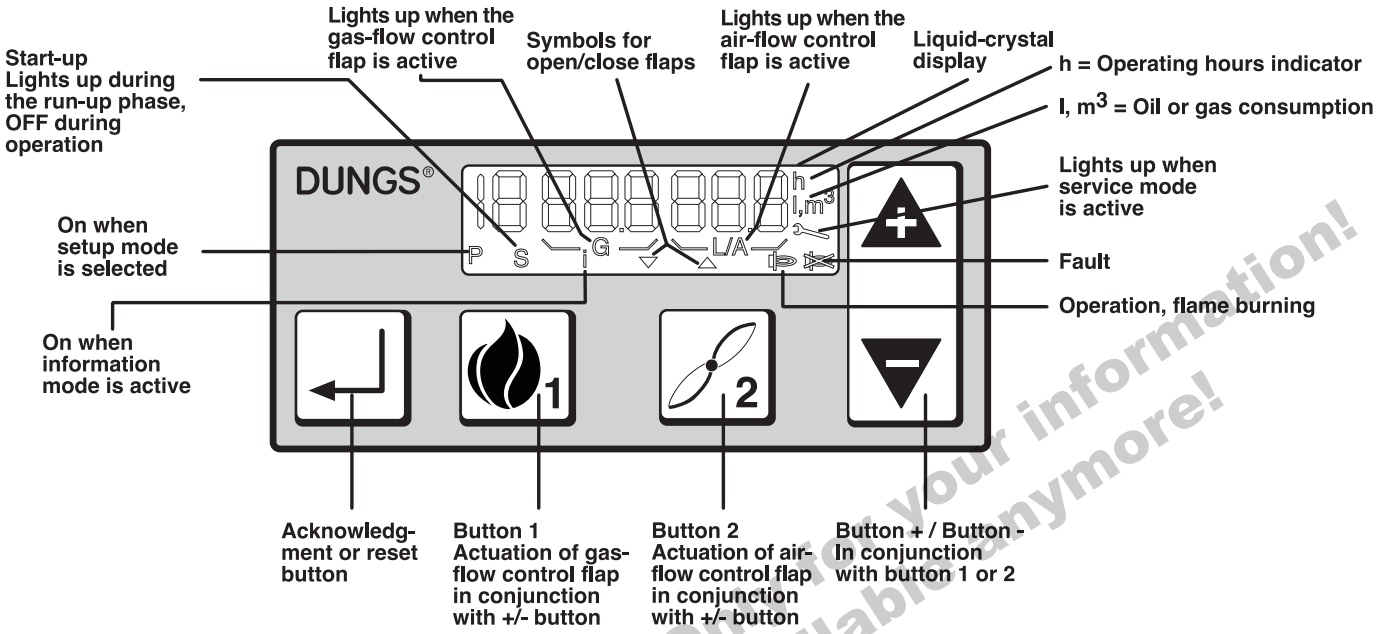

Old documentation - Ohne Ihre Information!
Product is not available anymore!

Using the buttons

Combinations of two or three buttons: always press the buttons simul-taneously. Note the direction of progress (arrows).

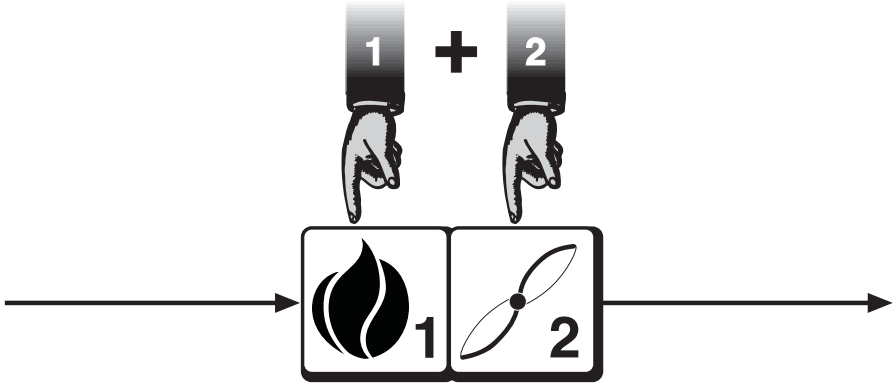

Printed in Germany / M-BOS • Edition 03.14 • Nr. 231 763

DUNGS®
Combustion Controls

Setup mode	Gas, electronic modulation Gas, pneumatic modulation Oil, three stage
Display functions	Operating mode Information mode Service mode
Parameterisation mode	Parameterisation mode is password-protected.
Error indication	System error messages Error messages

Old documentation - Only for your information!
Product is not available anymore!

Printed in Germany / M-BOS • Edition 03.14 • Nr. 231 763

Relationships between the individual display modes

DUNGS®
Combustion Controls

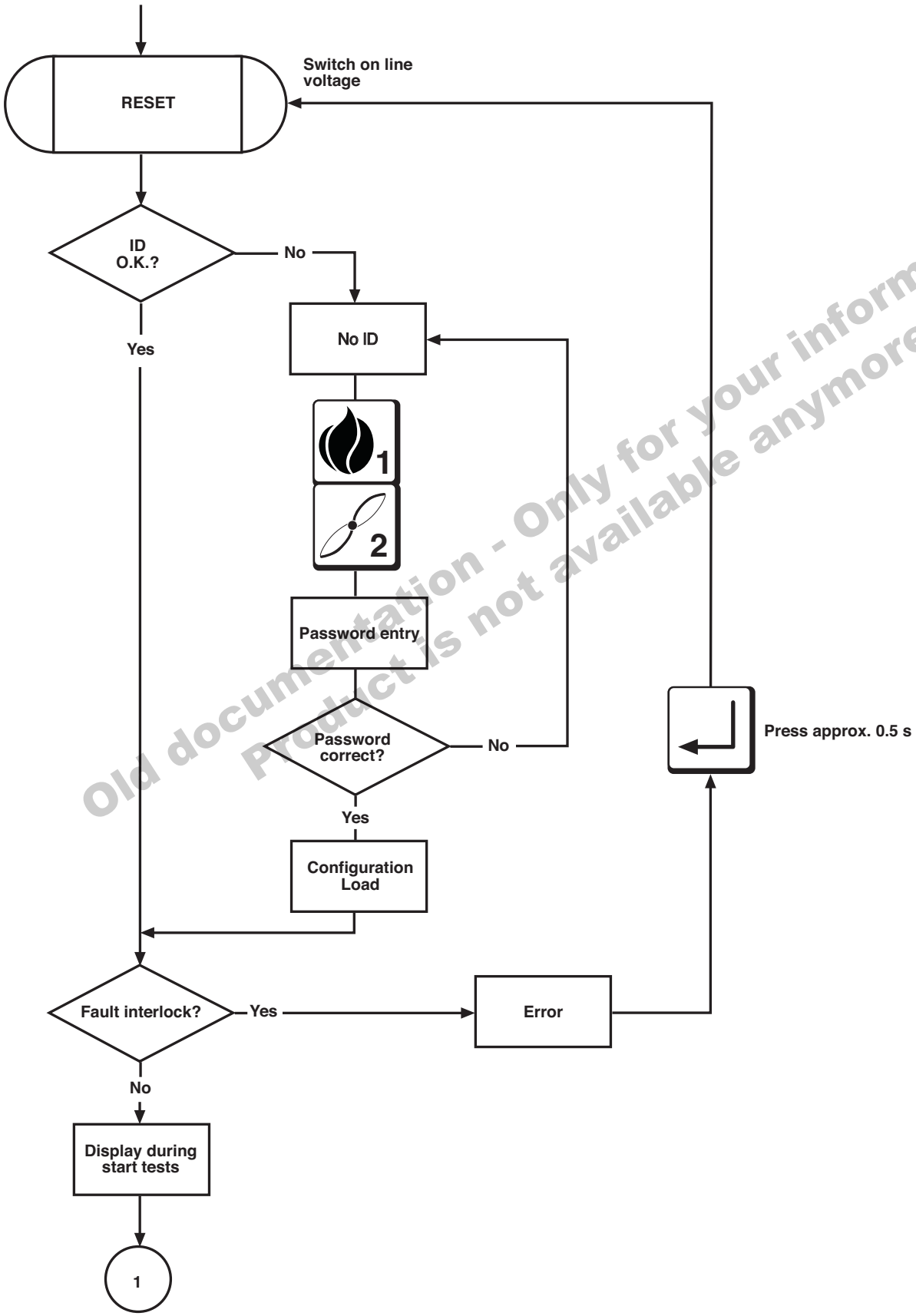

Old documentation - Only for your information! Product is not available anymore!

Printed in Germany / M-BOS • Edition 03.14 • Nr. 231 763

Relationships between the individual display modes

DUNGS®
Combustion Controls

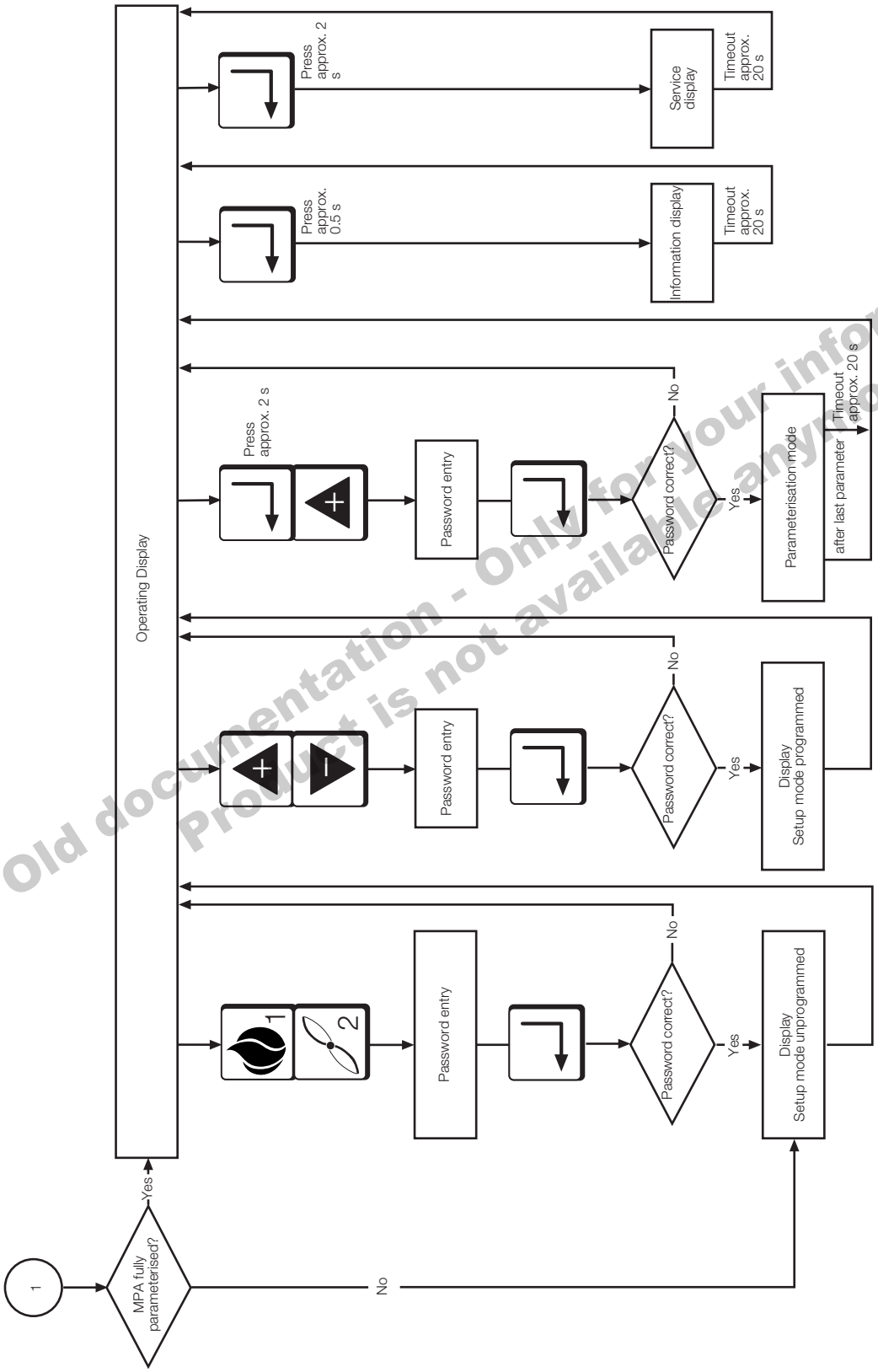

Old documentation - Only for your information! Product is not available anymore!

Printed in Germany / M-BOS • Edition 03.14 • Nr. 231 763

Display during standby

DUNGS®
Combustion Controls



The automatic burner-control system is on standby following a controlled shut-down. No pending request for heat.



The automatic burner-control system is on standby because line voltage is too low.



The automatic burner-control system is on standby because the safety circuit is interrupted.



The automatic burner-control system is on standby because the signal for start prevention is applied via the eBUS.

Old documentation - Only for your information!
Product is not available anymore!

Printed in Germany / M-BOS • Edition 03.14 • Nr. 231 763

Display when a password is entered in parameterisation or setup mode

DUNGS®
Combustion Controls

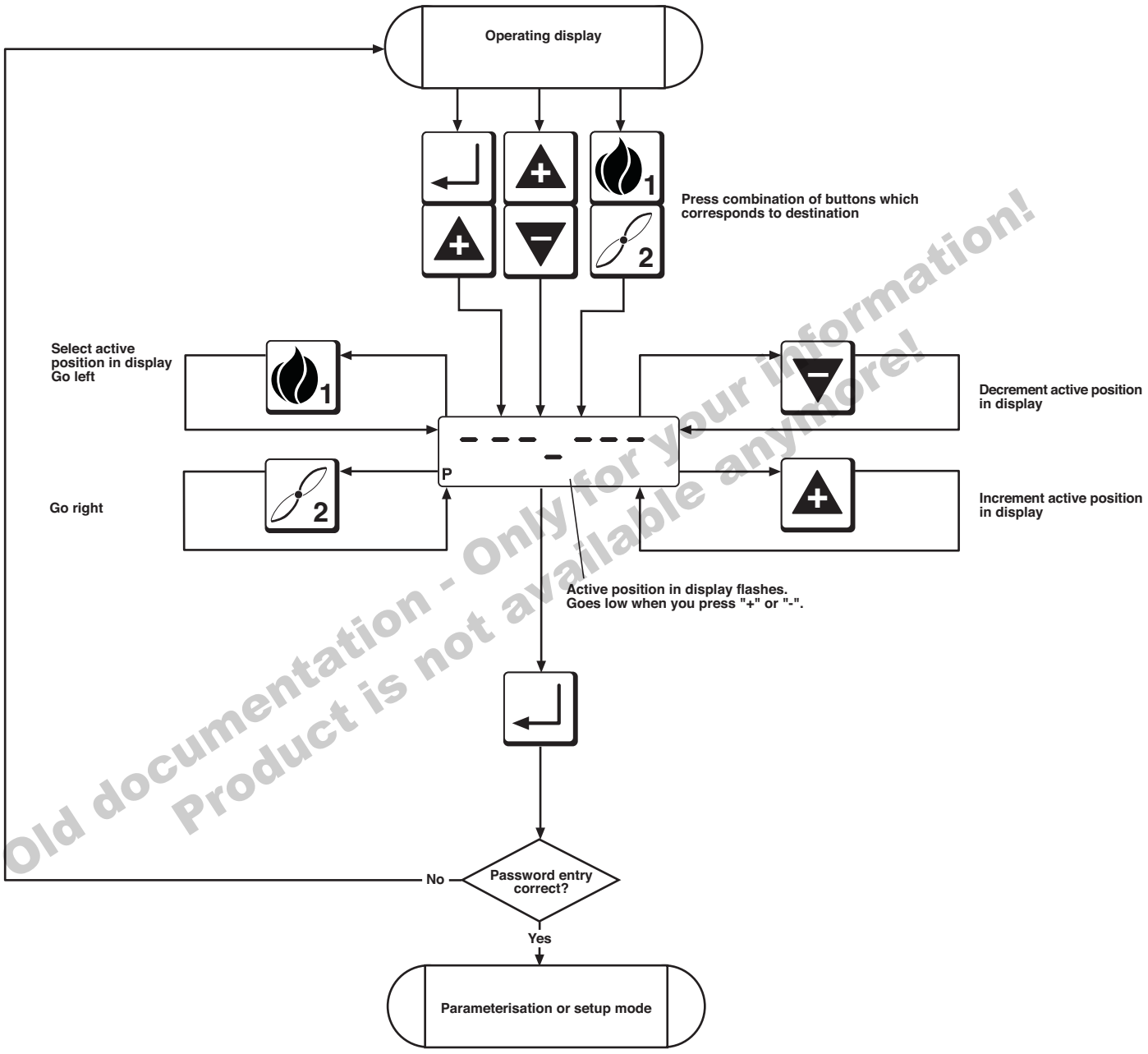

Old documentation - Only for your information! Product is not available anymore!

Printed in Germany / M-BOS • Edition 03.14 • Nr. 231 763

Display when the basic configuration is entered

DUNGS®
Combustion Controls

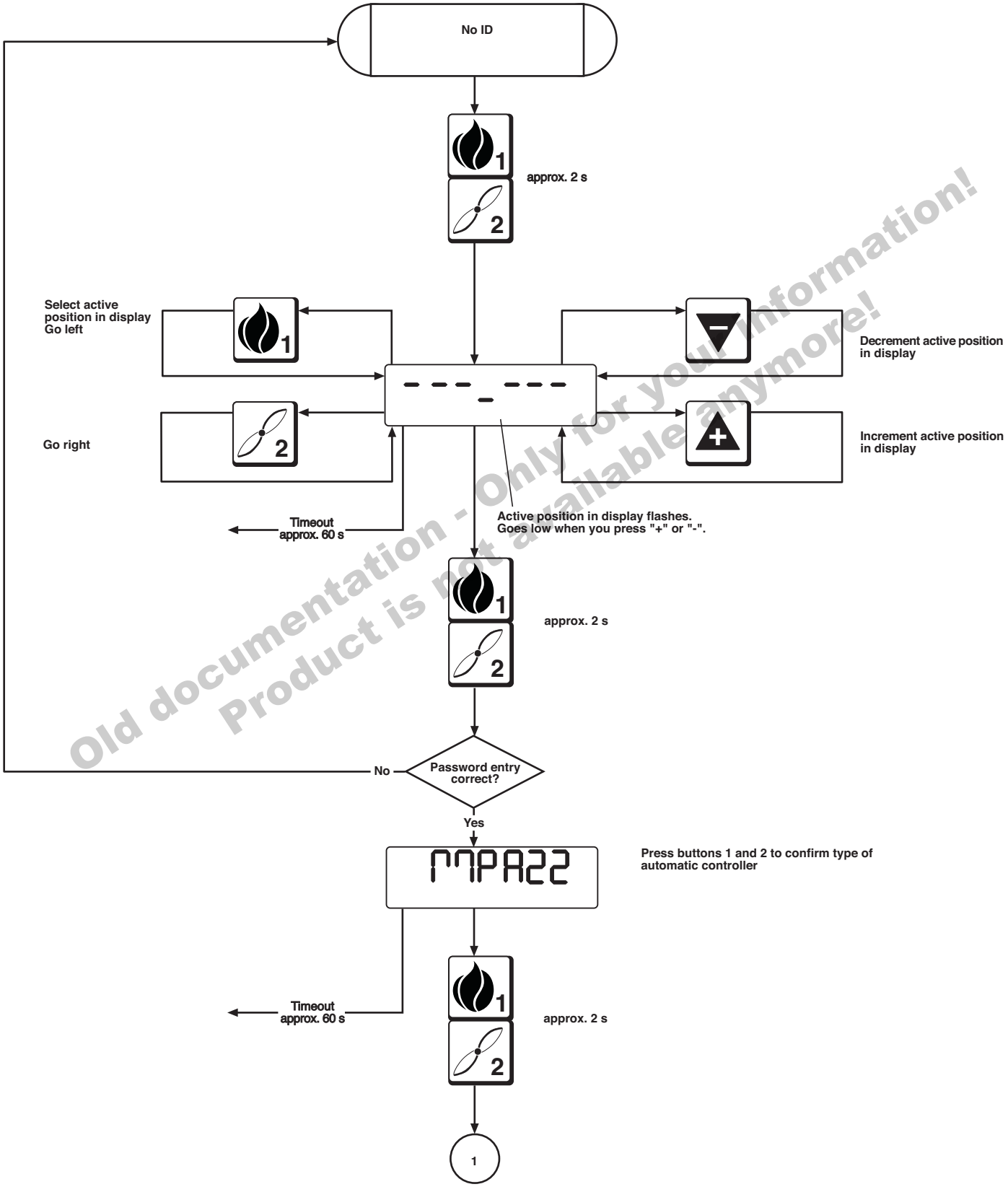

Old documentation - Only for your information! Product is not available anymore!

Printed in Germany / M-BOS • Edition 03.14 • Nr. 231 763

DUNGS®
Combustion Controls

Old documentation - Only for your information!
Product is no longer available anymore!

Empty sheet

Printed in Germany / M-BOS • Edition 03.14 • Nr. 231 763

DUNGS®
Combustion Controls

- **Prior to commissioning, make sure that all connections are correct.**

- **Check the following safety functions for commissioning:**

- **Shutdown of the controllers, monitors and limiters (as installed)**
- **switching points of gas-pressure switch**
- **Flame monitor**
- **Set times and operating modes**

⚠ It is important to step the auto-matic burner-control system at least once through the entire setup procedure for the appropriate operating mode. Only then is the automatic burner-control system programmed for automatic opera-tion in this mode.

- **Setup instructions, setup procedures**

- **In setup mode**

When operating voltage is applied, the MPA22 automatic burner-control system performs a startup test and then displays "OFFUPr".
This means that no setup procedure has been completed as yet.

The MPA22 automatic burner-control system has separate setup procedures for each operating mode and characteristic-map memories which are backed up separately for each operating mode.

A "P" is displayed while setup is in progress. This mode has a 30-minute timeout; the timer is reset each time you press a button on the touch-sensitive display. If the timeout expires a safety shutdown is triggered and the "OFFUPr" message reappears in the automatic burner-control system's display.
The purpose of this timeout is to prevent incomplete setup causing the burner to remain on for a prolonged period of time.

All safety functions are activated during the setup procedure, just as in normal operation. The only difference is that the servomotors can be brought to the limits specified in the setup mode. As in normal operation, flame failure, air-pressure monitor failure or a fault in servomotor drive and feedback, or other, similar faults result in a fault-triggered or safety shutdown.

Setup has to be repeated if a fault-triggered, safety or controlled shutdown occurs during the setup procedure. The values entered beforehand are retained, on condition that they pass the plausibility check which takes place on startup.

You must enter a password before you can set the parameters of the MPA22 automatic burner-control system.

⚠ Consult the operating instructions for the burner connected to the MPA22 for detailed settings.

The first step is always to set the automatic burner-control system to setup mode: Simultaneously press buttons "1" and "2".

A prompt asking you to enter the password appears on the display:

E OIL **Setup mode: oil, three-stage**

E GAS Pn **Setup mode: gas, pneumatic modulation**

E GAS EL **Setup mode: gas, electronic modulation**

⚠ If the mode displayed does not match the burner, check the wiring, the terminals of the servo drives and the coding plugs.

Old documentation - Only for your information!
Product is not available anymore!

Printed in Germany / M-BOS • Edition 03.14 • Nr. 231 763

Begin by setting the main parameters for the individual operating modes

The sequence for the main parameters is invariable, because they are interrelated by certain dependencies and limit values and these limits are constantly checked and rechecked during the setup procedure.

Main parameters for oil, three-stage sequence

⚠ **Only the servomotor for air can be parameterised.**

Main parameter	Minimum	Maximum
P9 = Stage 3	00.0°	90.0°
P3 = Stage 2	00.0°	P9-0.1°
P1 = Stage 1	00.0°	P3-0.1°
P0 = Ignition point	00.0°	P1
P2 = Changeover point	P1+0.1°	P3
P4 = Changeover point	P3+0.1°	P9

Main parameters for gas, pneumatic modulation: sequence

⚠ **Only the servomotor for air can be parameterised.**

Main parameter	Minimum	Maximum
P9 = Maximum power point	00.0°	90.0°
P1 = Minimum power point	00.0°	P9
P0 = Ignition point	00.0°	90.0°

Main parameters for gas, electronic modulation: sequence

⚠ **Servomotors for air and gas can be parameterised.**

Main parameter	Minimum	Maximum
P9 = Maximum power point	00.0°	90.0°
P1 = Minimum power point	00.0°	P9
P0 = Ignition point	P1-25.5°	P1+25.5°

Points P2…P8 are interpolated automatically between P1 and P9.

The first setting

Press the "+" button

Change the setting Air servomotor

Press button "2" (air servomotor) and either "+" or "-".
Parameterisable within the defined limits.

Change the setting Gas servomotor

Press button "1" (gas servomotor) and either "+" or "-".
Parameterisable within the defined limits.

Call up the next main parameter

Press "+"

Call up the preceding main parameter

Press "-"

Ready to start

Press the "+" button after you have set all the main parameters. The automatic burner-control system is now ready to start and indicates readiness by dis-playing the following message:

OIL **Setup mode: oil, three-stage** **Ready to start**

GAS Pn **Setup mode: gas, pneumatic modulation** **Ready to start**

GAS EL **Setup mode: gas, electronic modulation** **Ready to start**

The burner starts when the control chain is closed; a "P" appears in the display indicating that the automatic burner-control system is in setup mode and that the timeout function is therefore active.
Following a successful start with flame stabilization, the burner settles to ignition setting P0, irrespective of the operating mode. You can now set the ignition point.

⚠ **If the start is not followed by flame stabilization, try another start with different values for the ignition point.**

Old documentation, Only for your information!
Product is not available anymore!

Printed in Germany / M-BOS • Edition 03.14 • Nr. 231 763

Setup mode
Gas firing, electronic modulation

DUNGS®
Combustion Controls

The burner must be in standby status, otherwise you cannot access the setup mode

The controller automatically goes to standby status if the automatic burner-control system has not been programmed. In the unprogrammed state, the automatic burner-control system remains on standby. Unprogrammed means that the characteristic has not been fully programmed.
Once a valid characteristic has been programmed and the automatic burner-control system detects the presence of the corresponding components when it starts up, the burner starts as soon as the control chain and GWmax are closed.

Changing a characteristic defined beforehand

If you want to correct a characteristic or ignition point P0 without recalculating all other points as well, you can access setup mode by simultaneously pressing the "+" and "-" buttons.

Accessing setup mode

Simultaneously press the "1" and "2" buttons if you want to enter the full setup mode. The "P" symbol always appears in the display to indicate that setup mode is activated. If you do not press a button in setup mode before the timeout expires, setup mode is exited automatically and a RESTART is performed.

Old documentation - Only for your information!
Product is not available anymore!

Printed in Germany / M-BOS • Edition 03.14 • Nr. 231 763

Setup mode
Gas firing, electronic modulation

DUNGS®
Combustion Controls

Temperature controller switched ON

Display if parameters already set

Display in standby if not programmed

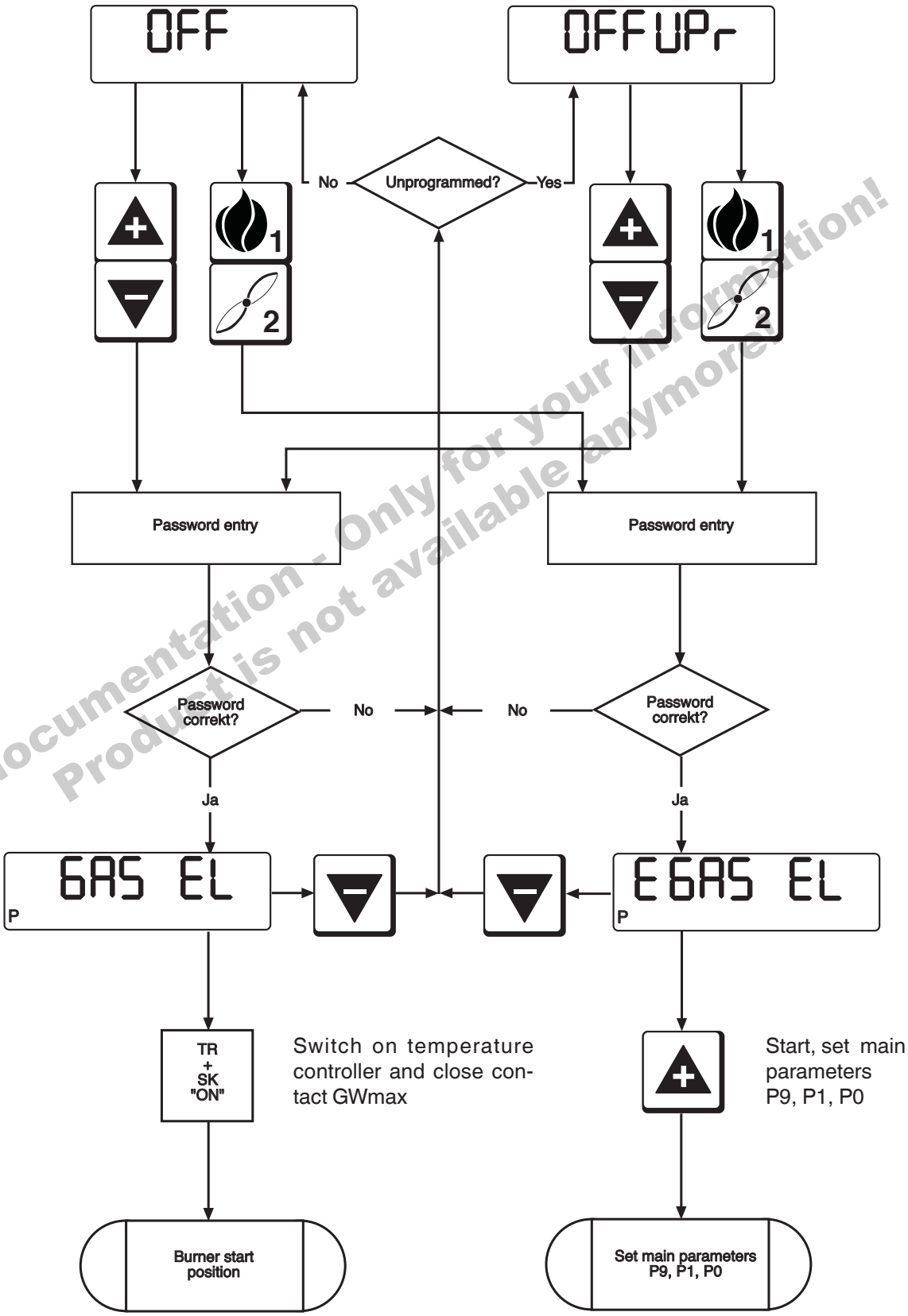

Old documentation - Only for your information! Product is not available anymore!

Printed in Germany / M-BOS • Edition 03.14 • Nr. 231 763

Setup mode
Gas firing, electronic modulation

DUNGS®
Combustion Controls

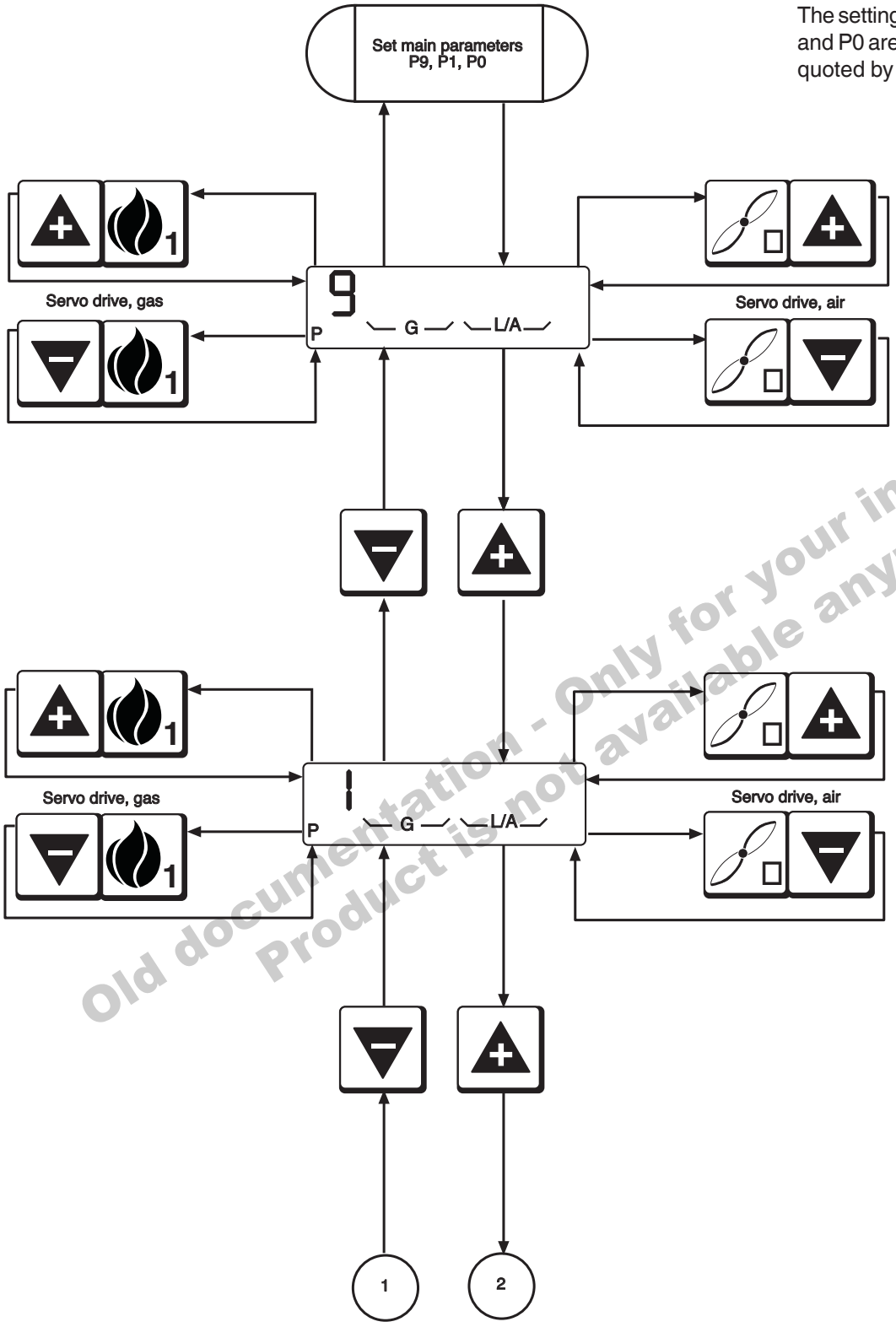

The settings for main parameters P9, P1 and P0 are burner-specific and must be quoted by the manufacturer.

Set characteristic point P9
max. 90.0°

min. 00.0°

Set characteristic point P1
max. P9

min. 00.0°

Old documentation - Only for your information!
Product is not available anymore!

Printed in Germany / M-BOS • Edition 03.14 • Nr. 231 763

Setup mode
Gas firing, electronic modulation

DUNGS®
Combustion Controls

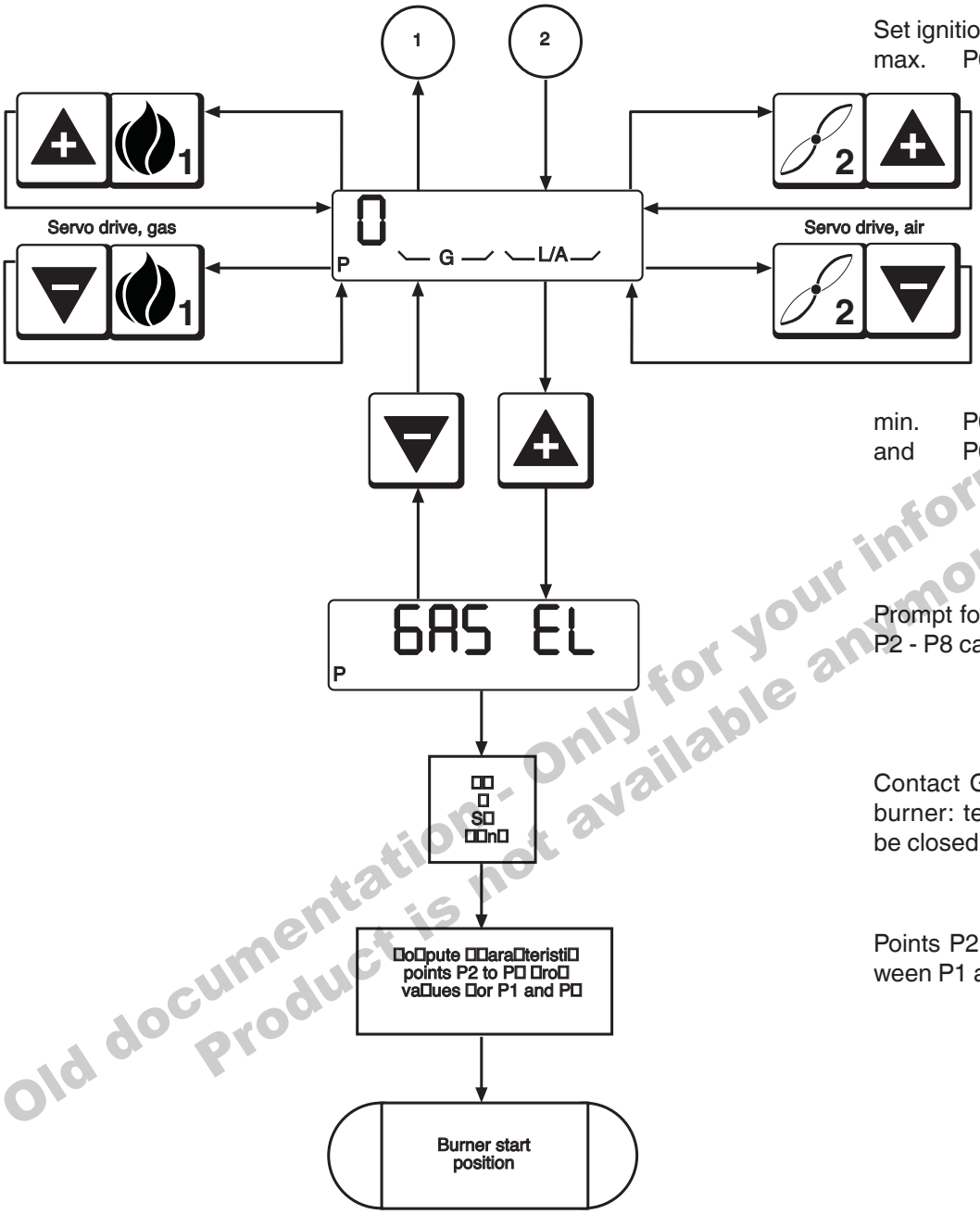

Set ignition point P0
max. P0 ≤ P1 + 25.5°

min. P0 ≥ P1 - 25.5°
and P0 ≥ 00.0°

Prompt for burner start so that points P2 - P8 can be set.

Contact GWmax. closed to start the burner: temperature controller must be closed.

Points P2 to P8 are interpolated between P1 and P9.

Old documentation - Only for your information! Product is not available anymore!

Printed in Germany / M-BOS • Edition 03.14 • Nr. 231 763

Setup mode
Gas firing, electronic modulation

DUNGS®
Combustion Controls

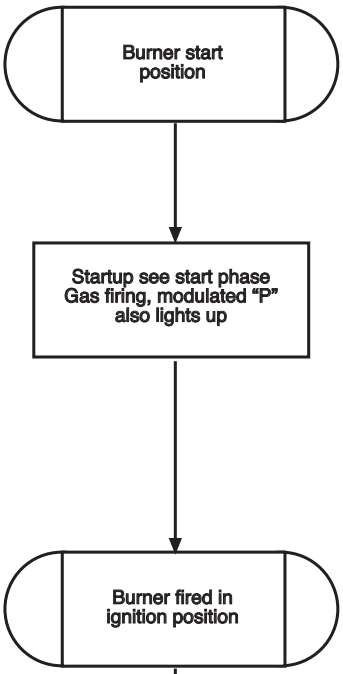

When burner is lit:
1. Set the gas-pressure regulator to the value specified in the operating instructions.
2. Precision-adjust ignition point.

If start is successful, the burner remains in the ignition position.
If flame does not stabilize, repeat the procedure with a new ignition point P0.

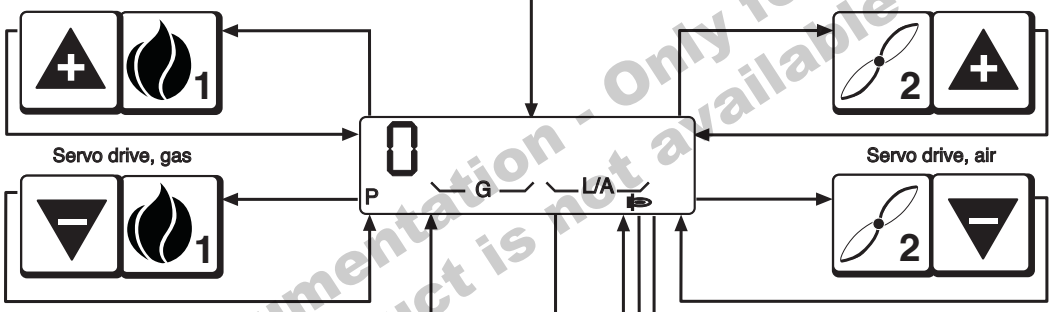

Set ignition point P0
max. P1 + 25.5°
min. P1 - 25.5°
and P0 ≥ 00.0°

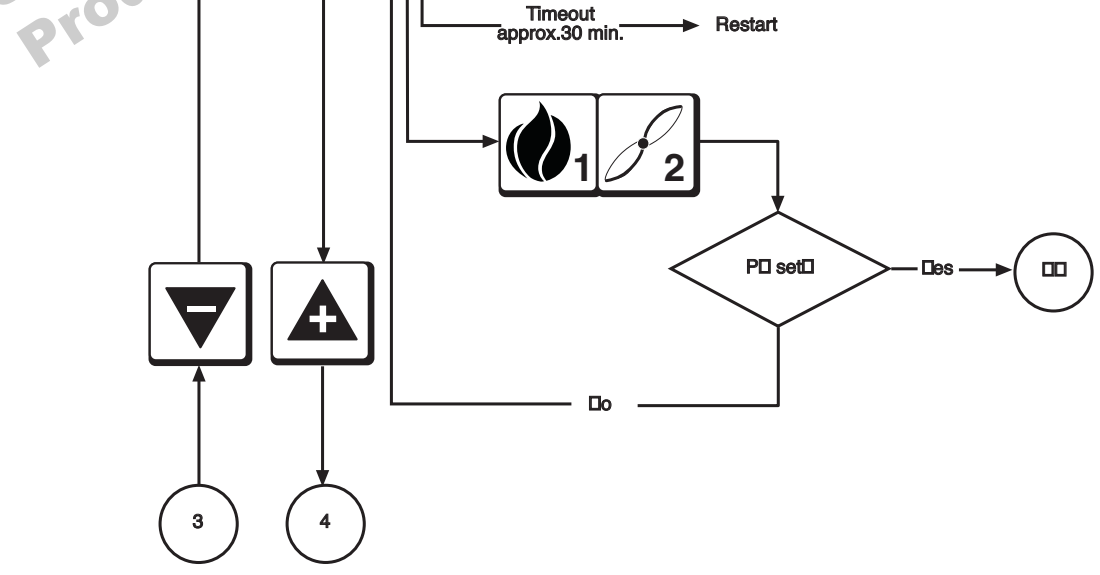

Only documentation - Only for your information! Product is not available anymore!

Printed in Germany / M-BOS • Edition 03.14 • Nr. 231 763

Setup mode
Gas firing, electronic modulation

DUNGS®
Combustion Controls

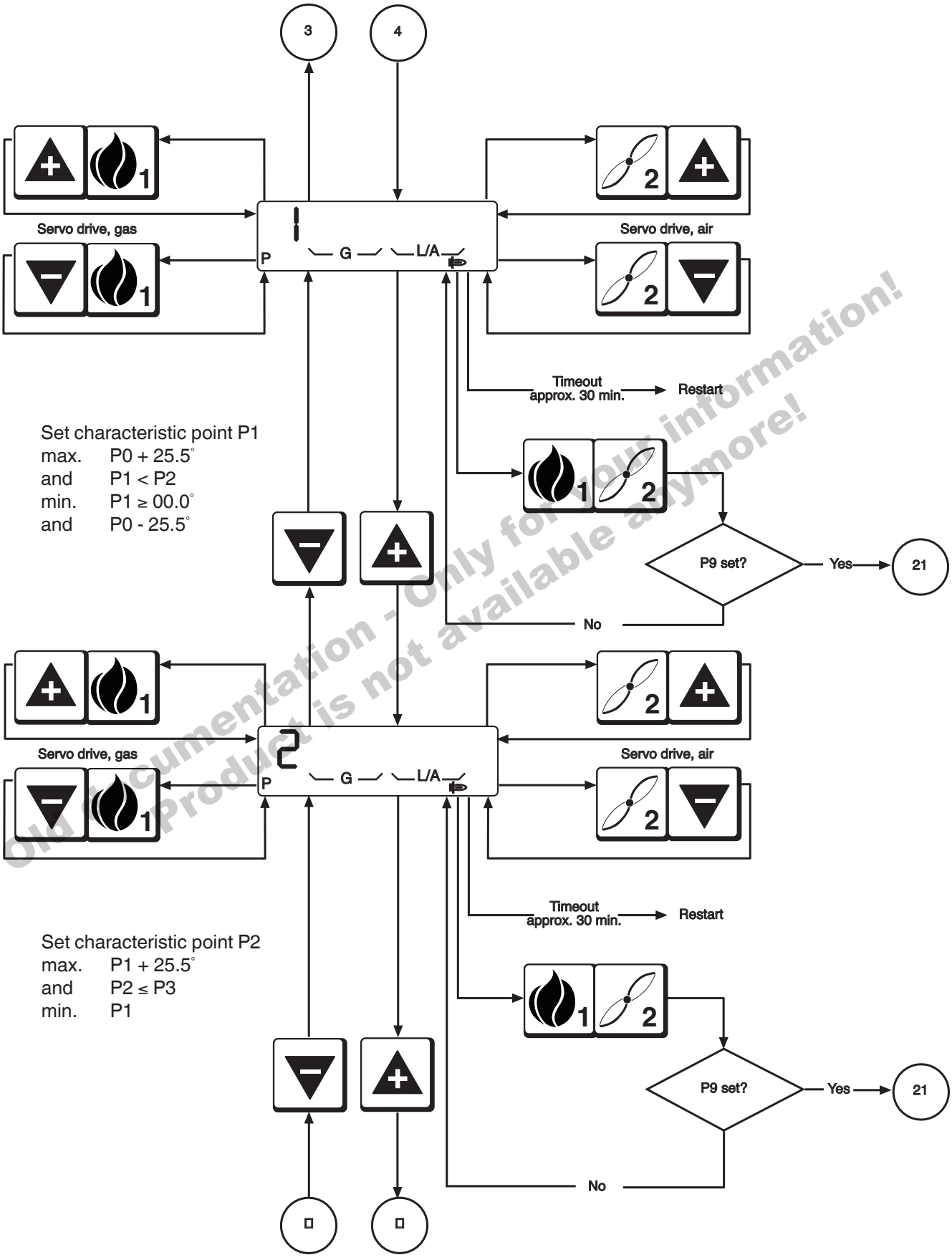

Old documentation - Only for your information!
Product is not available anymore!

Printed in Germany / M-BOS • Edition 03.14 • Nr. 231 763

Setup mode
Gas firing, electronic modulation

DUNGS®
Combustion Controls

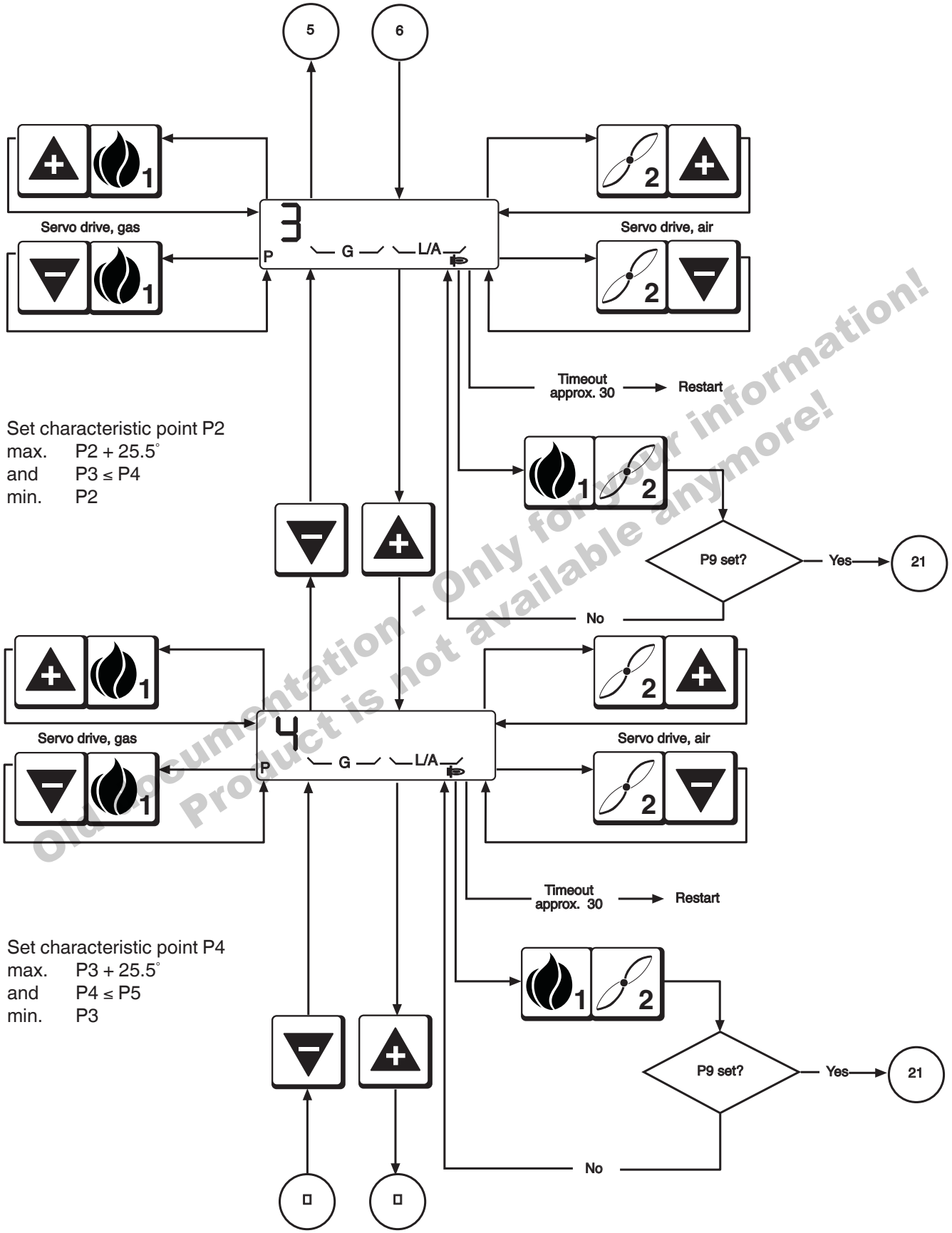

Old documentation - Only for your information!
Product is not available anymore!

Printed in Germany / M-BOS • Edition 03.14 • Nr. 231 763

Setup mode
Gas firing, electronic modulation

DUNGS®
Combustion Controls

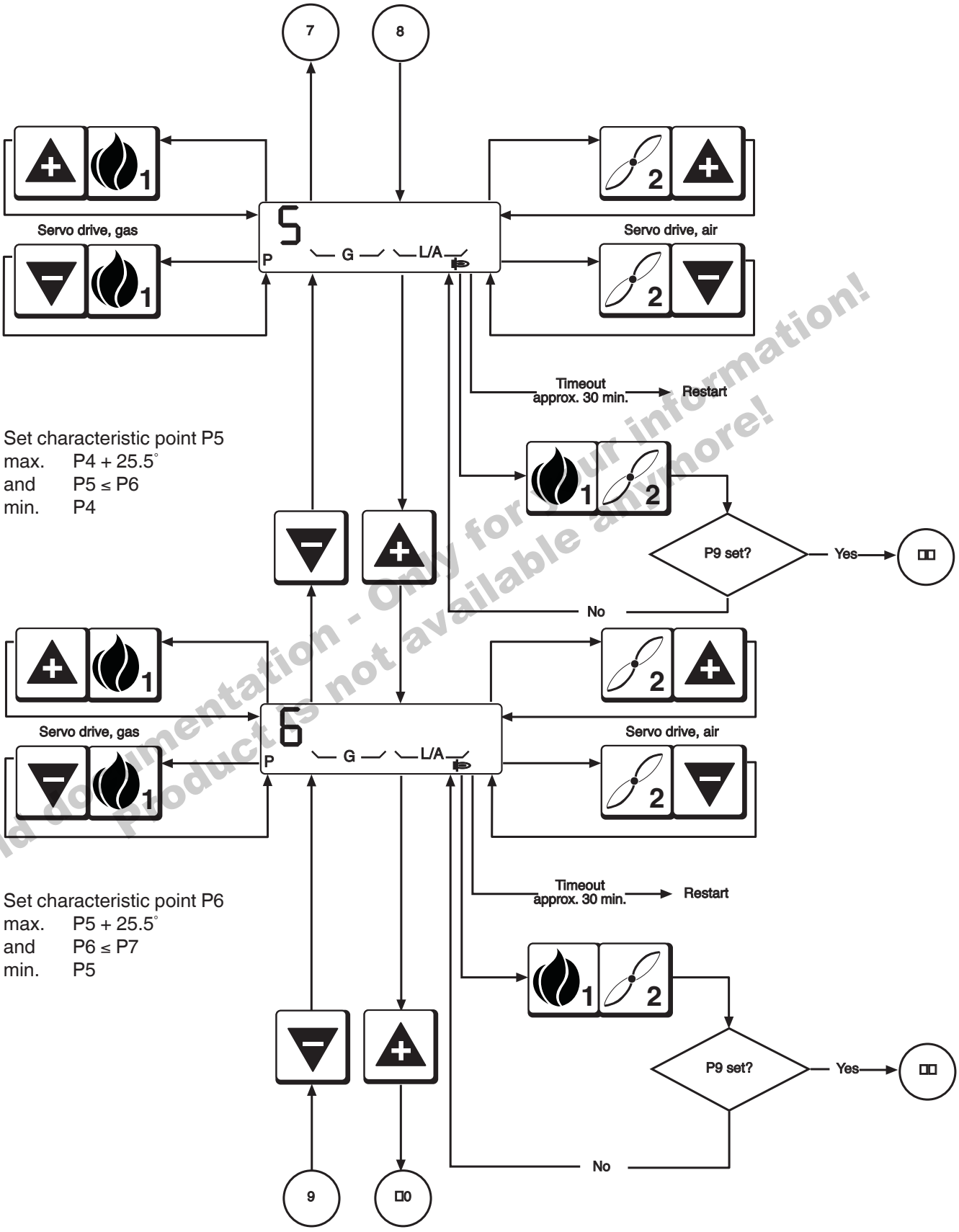

Old documentation - Only for your information! Product is not available anymore!

Printed in Germany / M-BOS • Edition 03.14 • Nr. 231 763

Setup mode
Gas firing, electronic modulation

DUNGS®
Combustion Controls

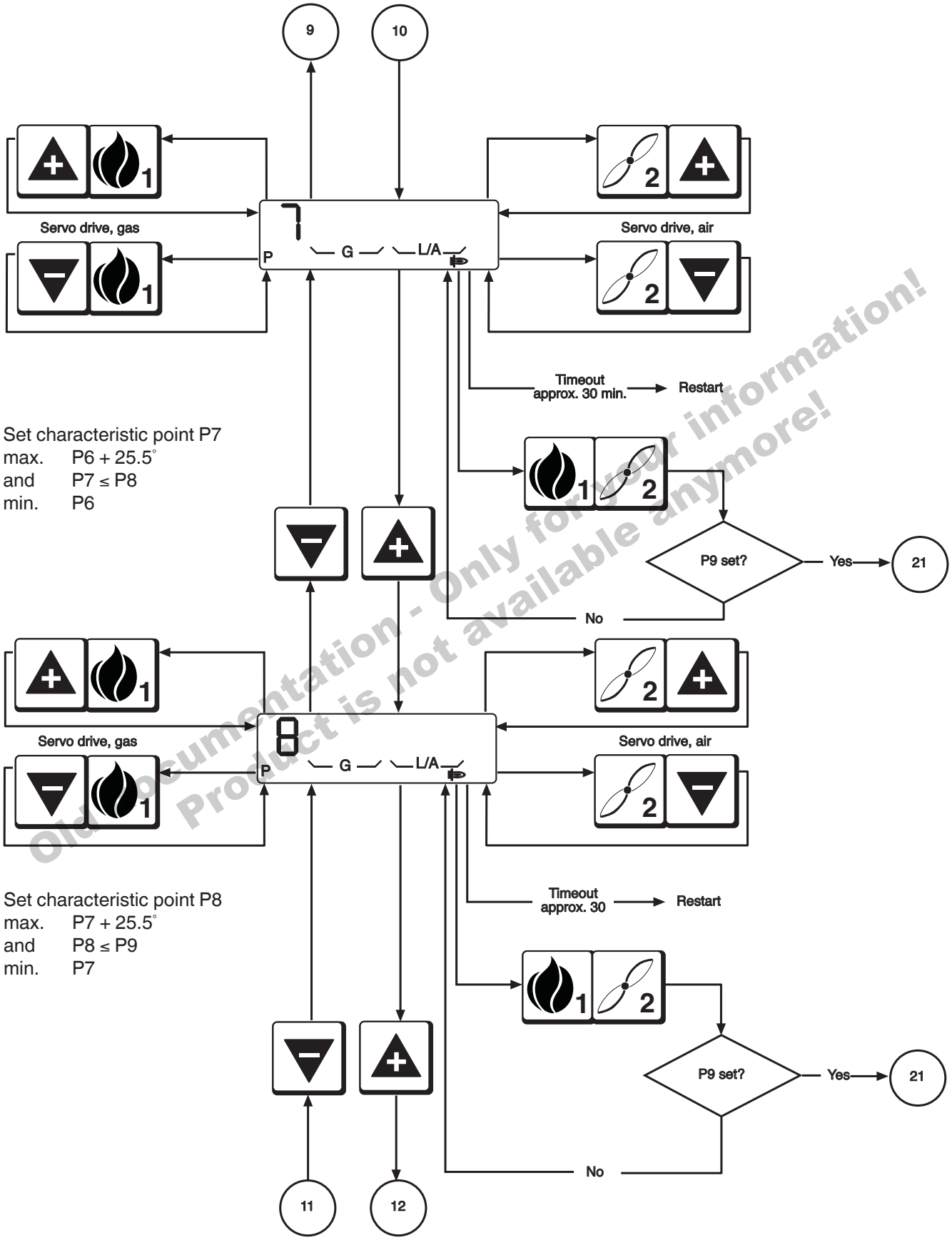

Old documentation - Only for your information! Product is not available anymore!

Printed in Germany / M-BOS • Edition 03.14 • Nr. 231 763

Setup mode
Gas firing, electronic modulation

DUNGS®
Combustion Controls

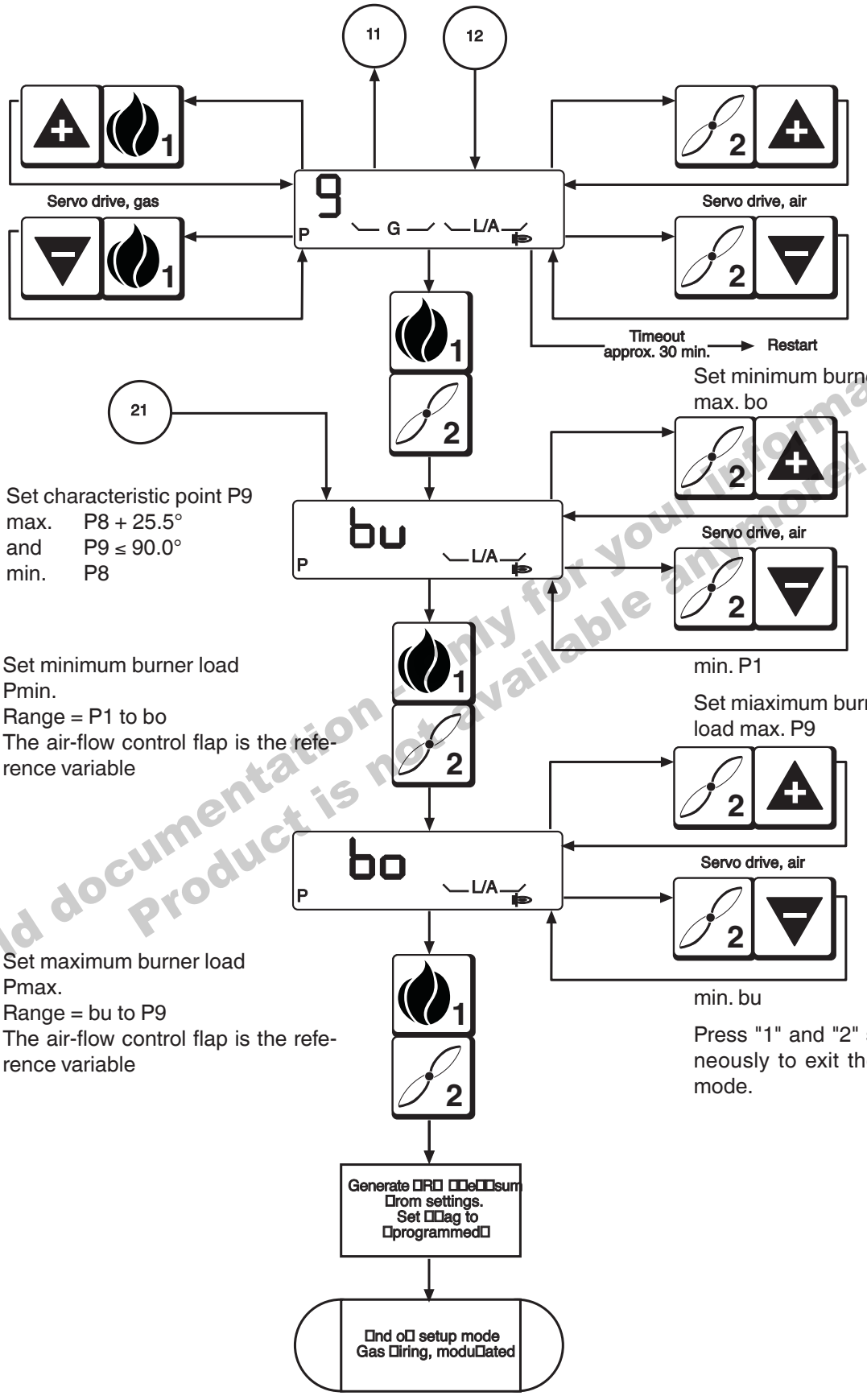

Old documentation - only for your information!
Product is not available anymore!

Printed in Germany / M-BOS • Edition 03.14 • Nr. 231 763

Setup mode
Gas firing, pneumatic modulation

DUNGS®
Combustion Controls

The burner must be in standby status, otherwise you cannot access the setup mode

The controller automatically goes to standby status if the automatic burner-control system has not been programmed. In the unprogrammed state, the automatic burner-control system remains on standby. Unprogrammed means that the working point has not been fully programmed.
Once valid working points have been programmed and the automatic burner-control system detects the presence of the corresponding components when it starts up, the burner starts as soon as the control chain and GWmax are closed.

Changing points defined beforehand

If progamming has been completed and you want to correct points such as the ignition load P0, low load P1 or high load P9 in operation, press the "+" and "-" buttons simultaneously to access setup mode.

Accessing setup mode

Simultaneously press the "1" and "2" buttons if you want to enter the full setup mode. The "P" symbol always appears in the display to indicate that setup mode is activated. If you do not press a button in setup mode before the timeout expires, setup mode is exited automatically and a RESTART is performed.

Old documentation - Only for your information!
Product is not available anymore!

Printed in Germany / M-BOS • Edition 03.14 • Nr. 231 763

Setup mode
Gas firing, pneumatic modulation

DUNGS®
Combustion Controls

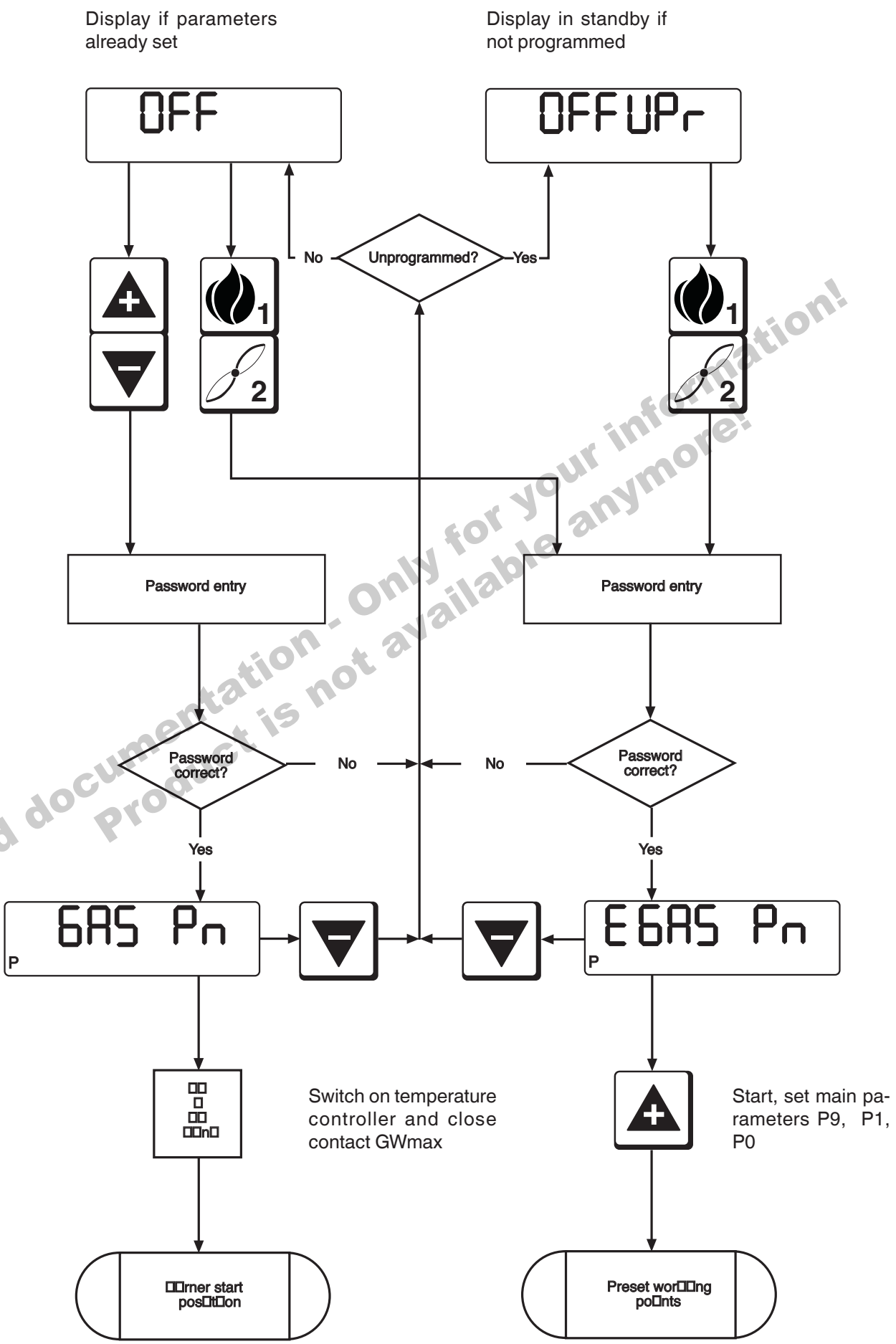

Old documentation - Only for your information! Product is not available anymore!

Printed in Germany / M-BOS • Edition 03.14 • Nr. 231 763

Setup mode
Gas firing, pneumatic modulation

DUNGS®
Combustion Controls

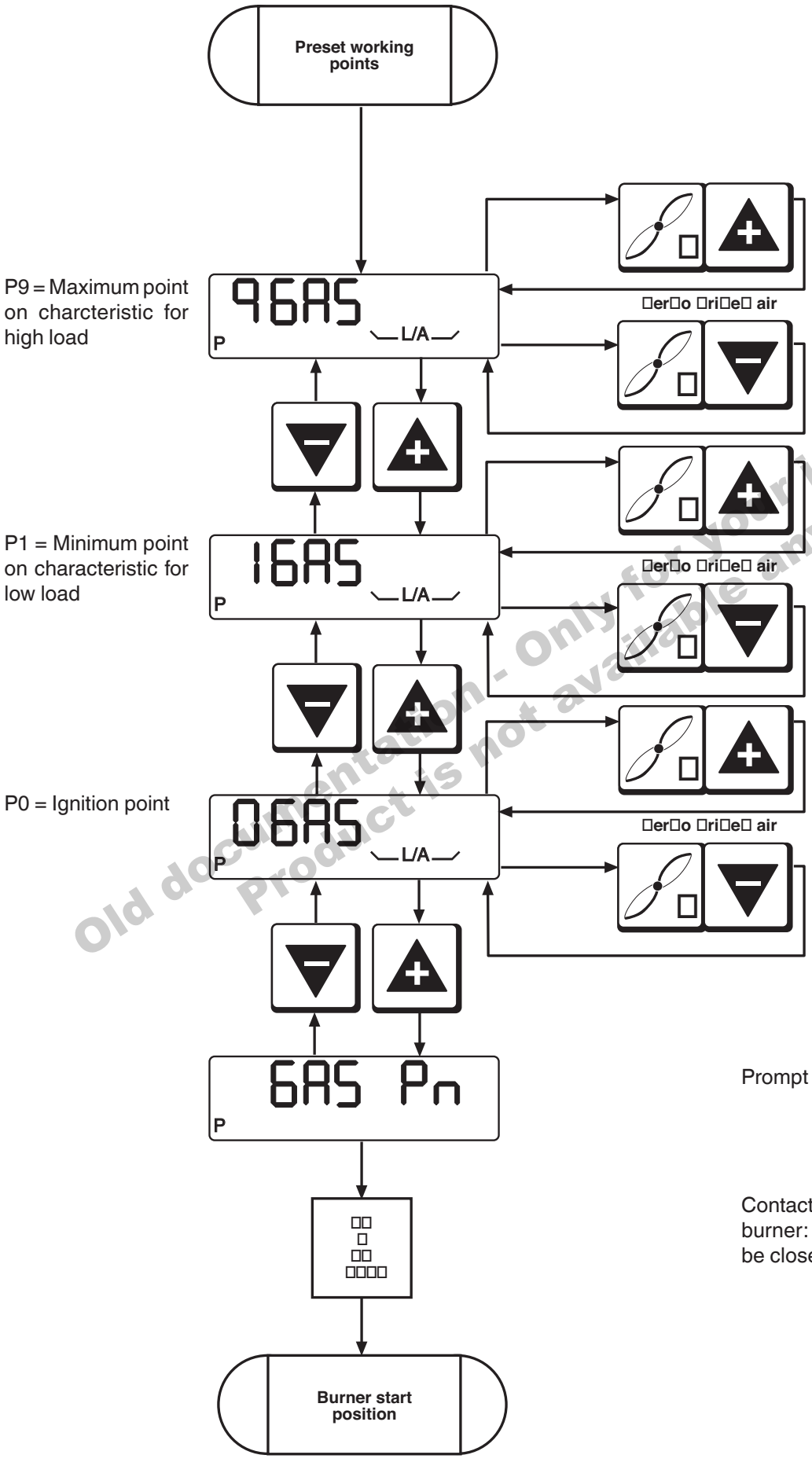

Contact GWmax. closed to start the burner: temperature controller must be closed.

Old documentation - Only for your information! Product is not available anymore!

Printed in Germany / M-BOS • Edition 03.14 • Nr. 231 763

Setup mode
Gas firing, pneumatic modulation

DUNGS®
Combustion Controls

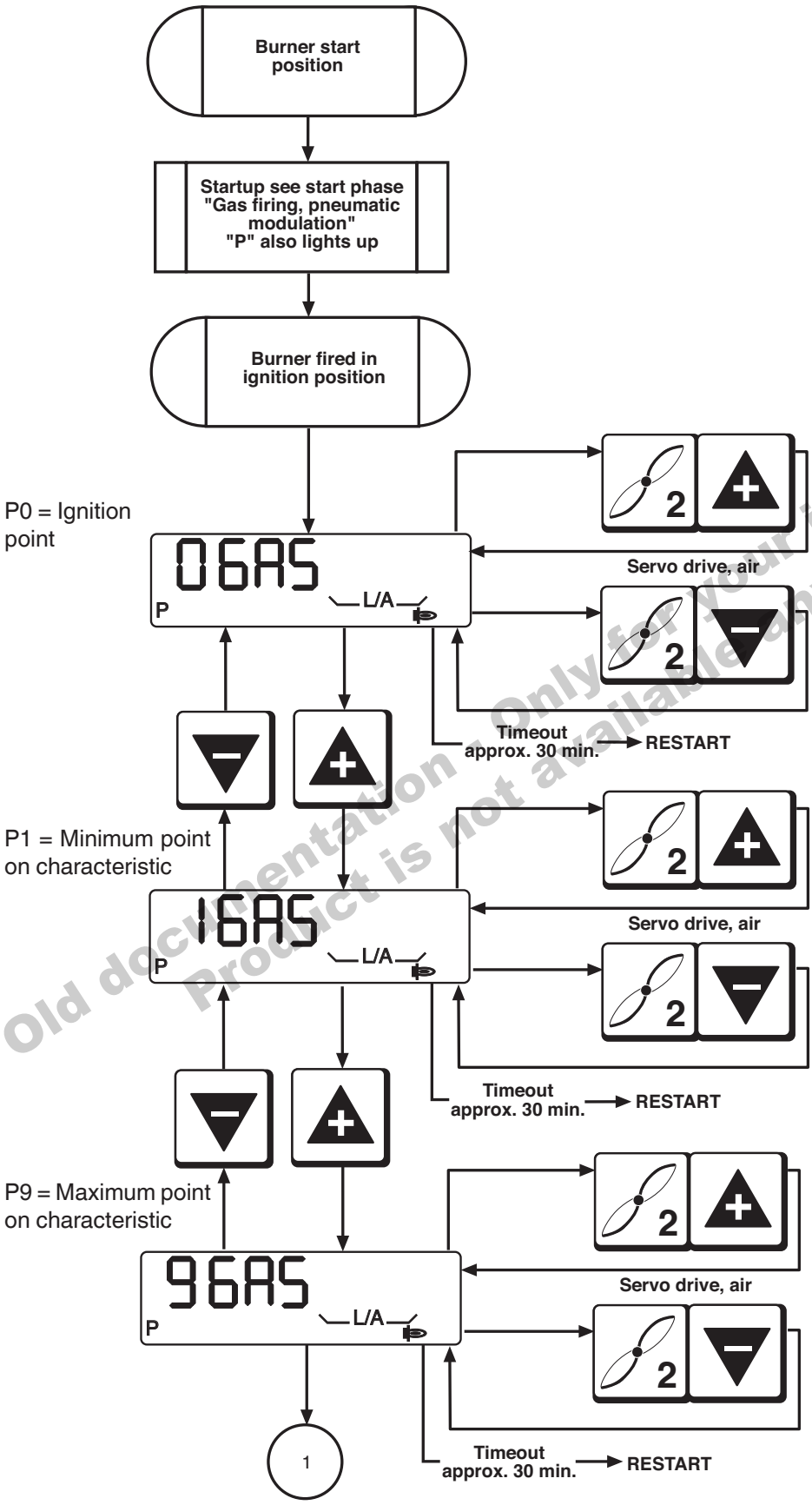

If start is succesful, the burner remains in the ignition position.
If flame does not stabilize, repeat the procedure with new ignition point P0.

When burner is lit:
1. Set the gas-pressure regulator to the value specified in the operating instructions.
2. Precision-adjust ignition point.

Old documentation - Only for your information!
Product is not available anymore!

Printed in Germany / M-BOS • Edition 03.14 • Nr. 231 763

Setup mode
Gas firing, pneumatic modulation

DUNGS®
Combustion Controls

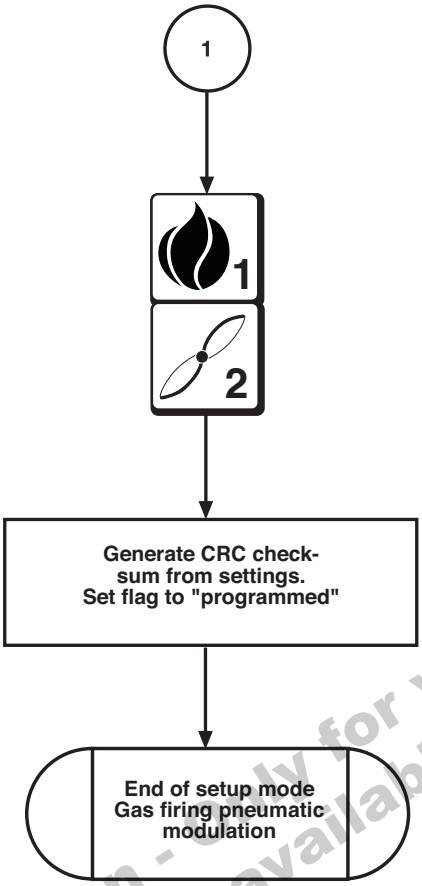

Press "1" and "2" simultaneously to exit the setup mode.

Old documentation - only for your information!
Product is not available anymore!

Printed in Germany / M-BOS • Edition 03.14 • Nr. 231 763

DUNGS®
Combustion Controls

The burner must be in standby status, otherwise you cannot access the setup mode

The controller automatically goes to standby status if the automatic burner-control system has not been programmed. In the unprogrammed state, the automatic burner-control system remains on standby. Unprogrammed means that the working point has not been fully programmed.
Once valid working points have been programmed and the automatic burner-control system detects the presence of the corresponding components when it starts up, the burner starts as soon as the control chain and GWmax are closed.

Changing points defined beforehand

If progamming has been completed and you want to correct points such as the the first stage P1, the second stage P3, the third stage P9 or the changeover points P2 and P4 in operation, press the "+" and "-" buttons simultaneously to access setup mode.

Accessing setup mode

Simultaneously press the "1" and "2" buttons if you want to enter the full setup mode. The "P" symbol always appears in the display to indicate that setup mode is activated. If you do not press a button in setup mode before the timeout expires, setup mode is exited automatically and a RESTART is performed.

Old documentation - Only for your information!
Product is not available anymore!

Printed in Germany / M-BOS • Edition 03.14 • Nr. 231 763

Setup mode
Oil firing, three stage

DUNGS®
Combustion Controls

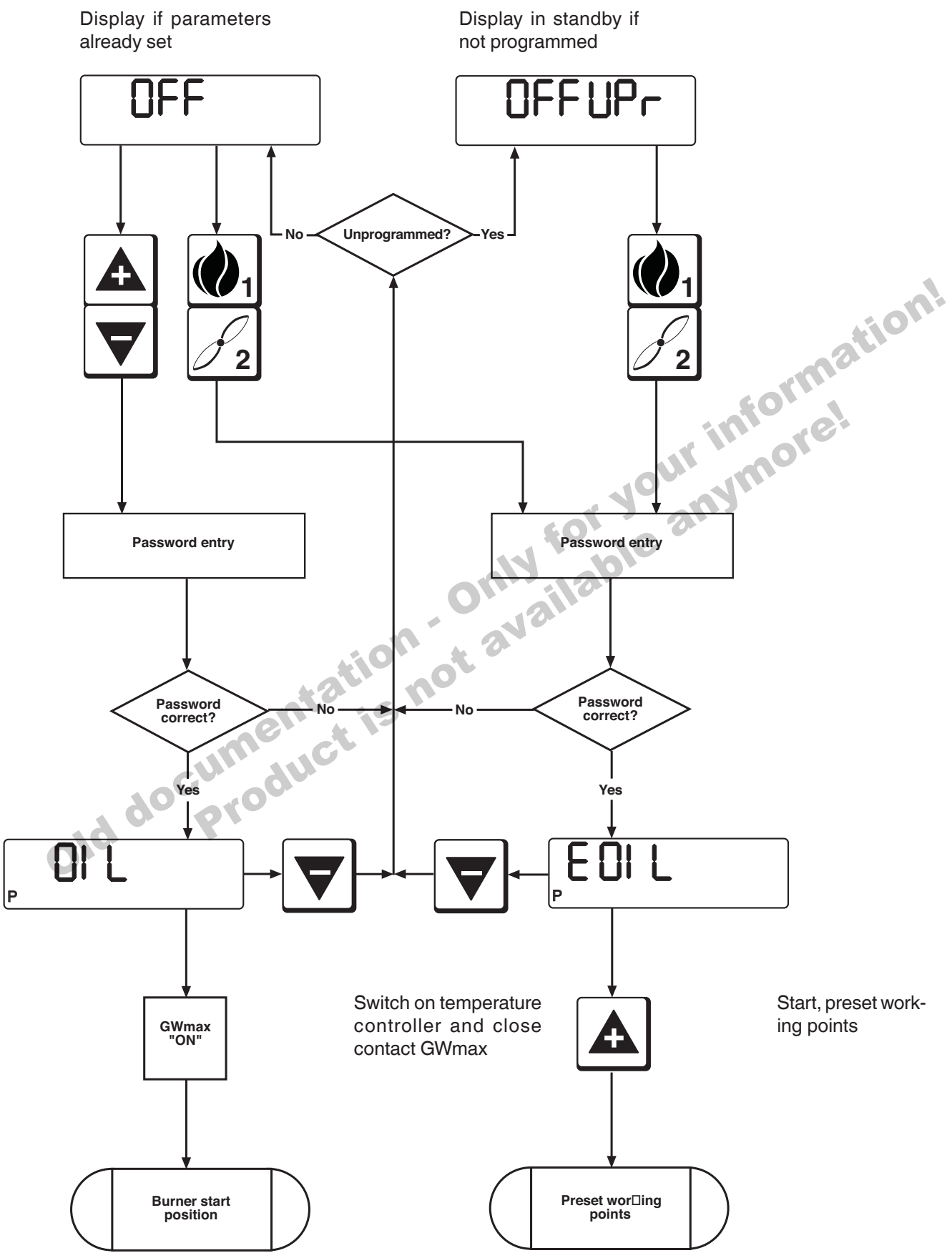

Old documentation - Only for your information! Product is not available anymore!

Printed in Germany / M-BOS • Edition 03.14 • Nr. 231 763

Setup mode
Oil firing, three stage

DUNGS®
Combustion Controls

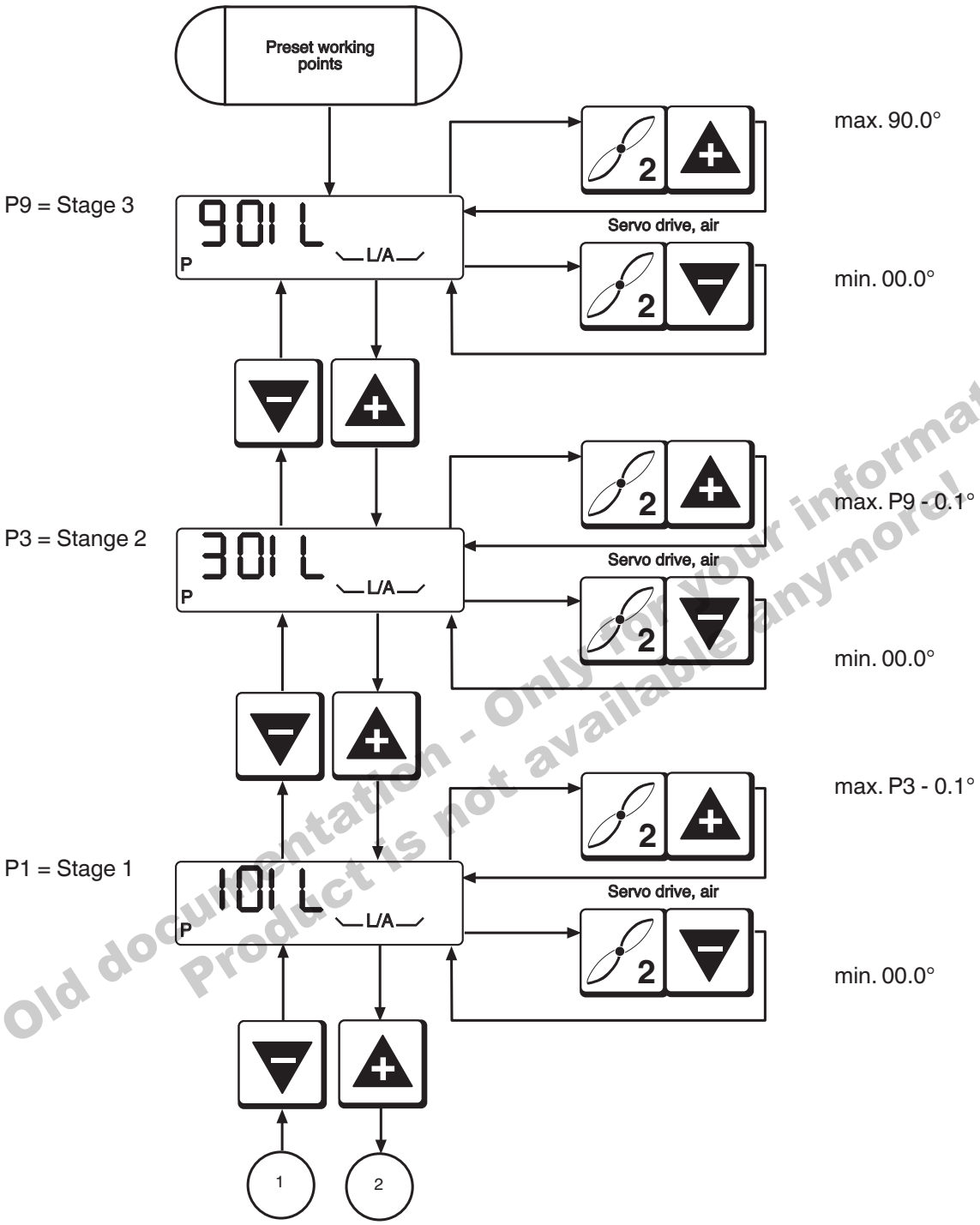

Old documentation - Only for your information!
Product is not available anymore!

Printed in Germany / M-BOS • Edition 03.14 • Nr. 231 763

Setup mode
Oil firing, three stage

DUNGS®
Combustion Controls

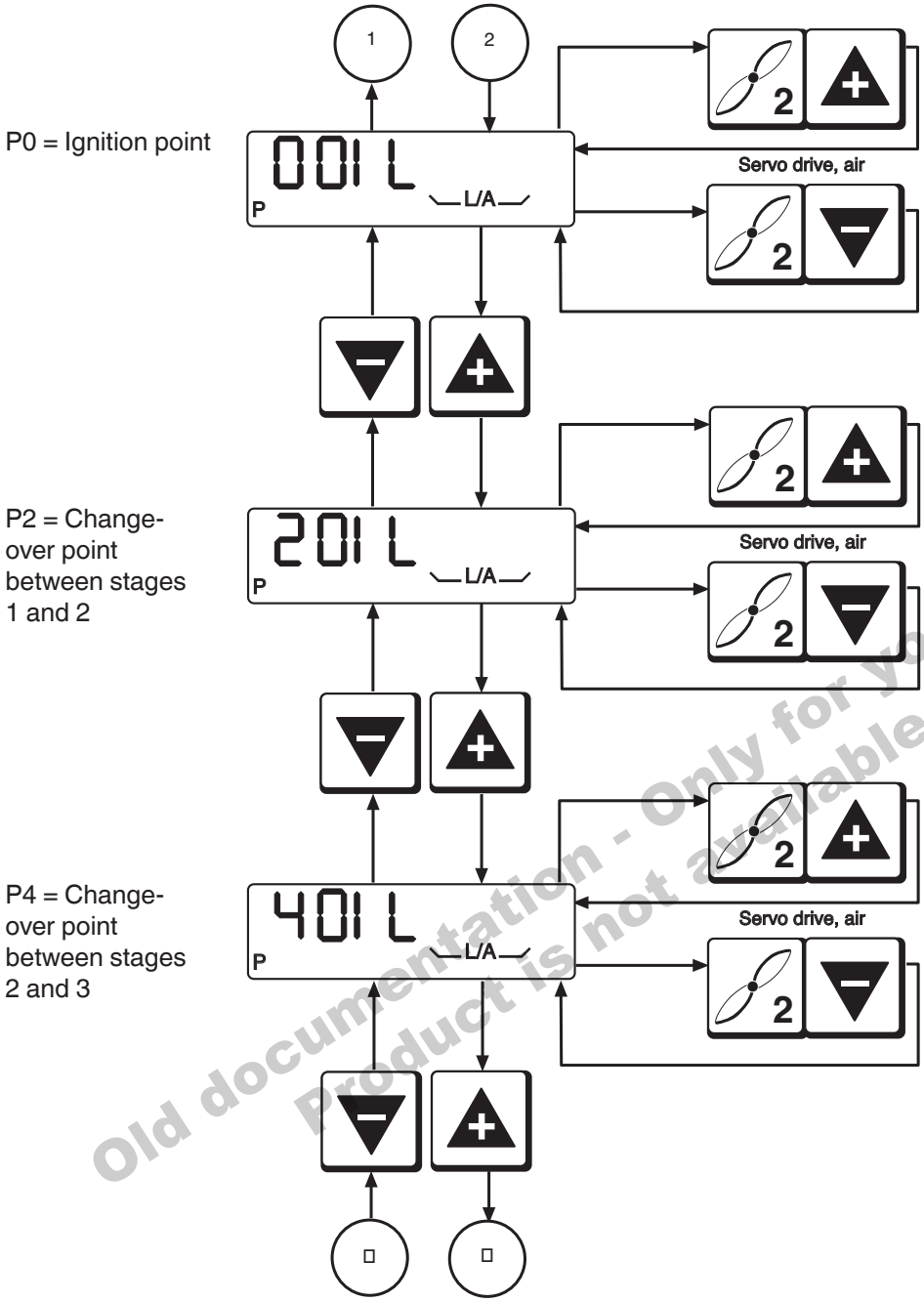

Old documentation - Only for your information! Product is not available anymore!

Printed in Germany / M-BOS • Edition 03.14 • Nr. 231 763

Setup mode
Oil firing, three stage

DUNGS®
Combustion Controls

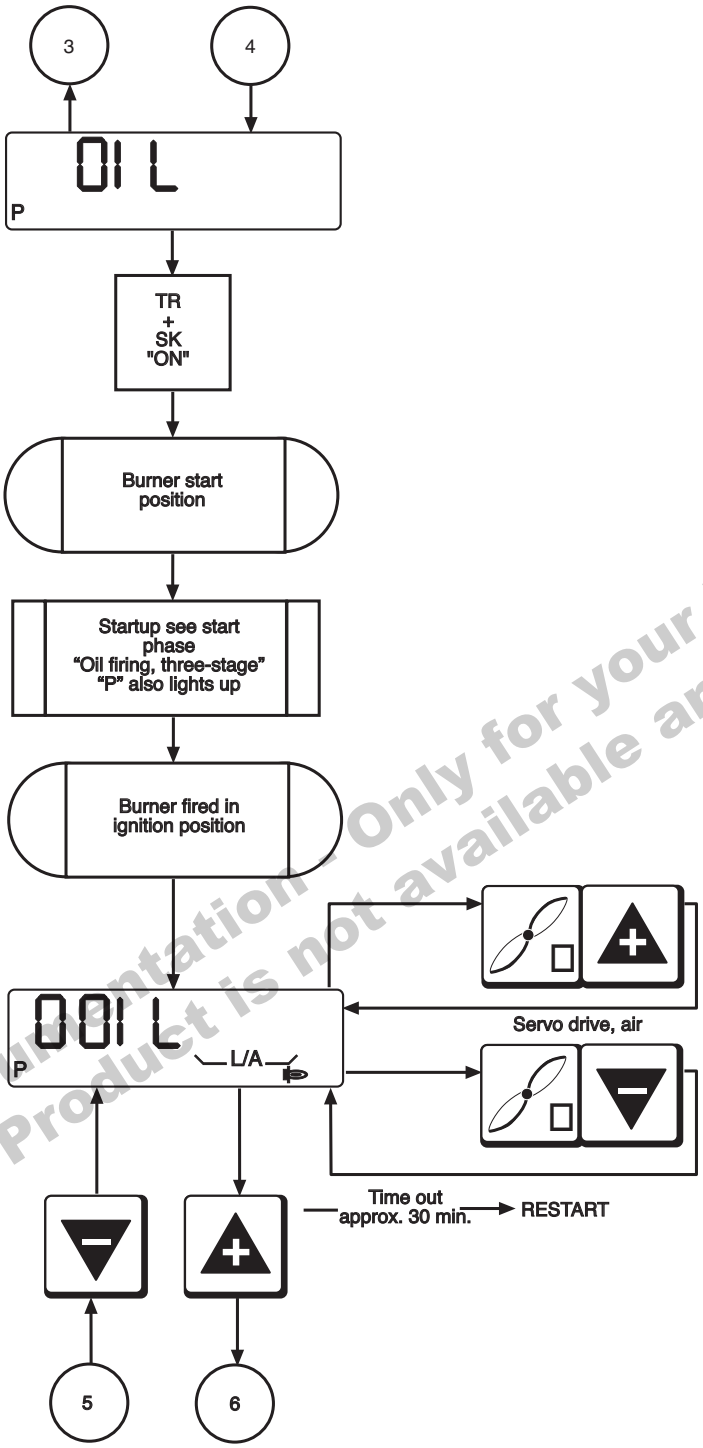

Prompt for burner start

Contact GWmax. closed to start the burner: temperature controller must be closed.

If start is successful, the burner remains in the ignition position.
If flame does not stabilize, repeat the procedure with new ignition point P0.
When burner is lit:
1. Set oil-pressure regulator to desired value.
2. Precision-adjust ignition point.

max. P1

min. 00.0°

Press "+" to leave ignition setting

Old documentation! Only for your information! Product is not available anymore!

Printed in Germany / M-BOS • Edition 03.14 • Nr. 231 763

Setup mode
Oil firing, three stage

DUNGS®
Combustion Controls

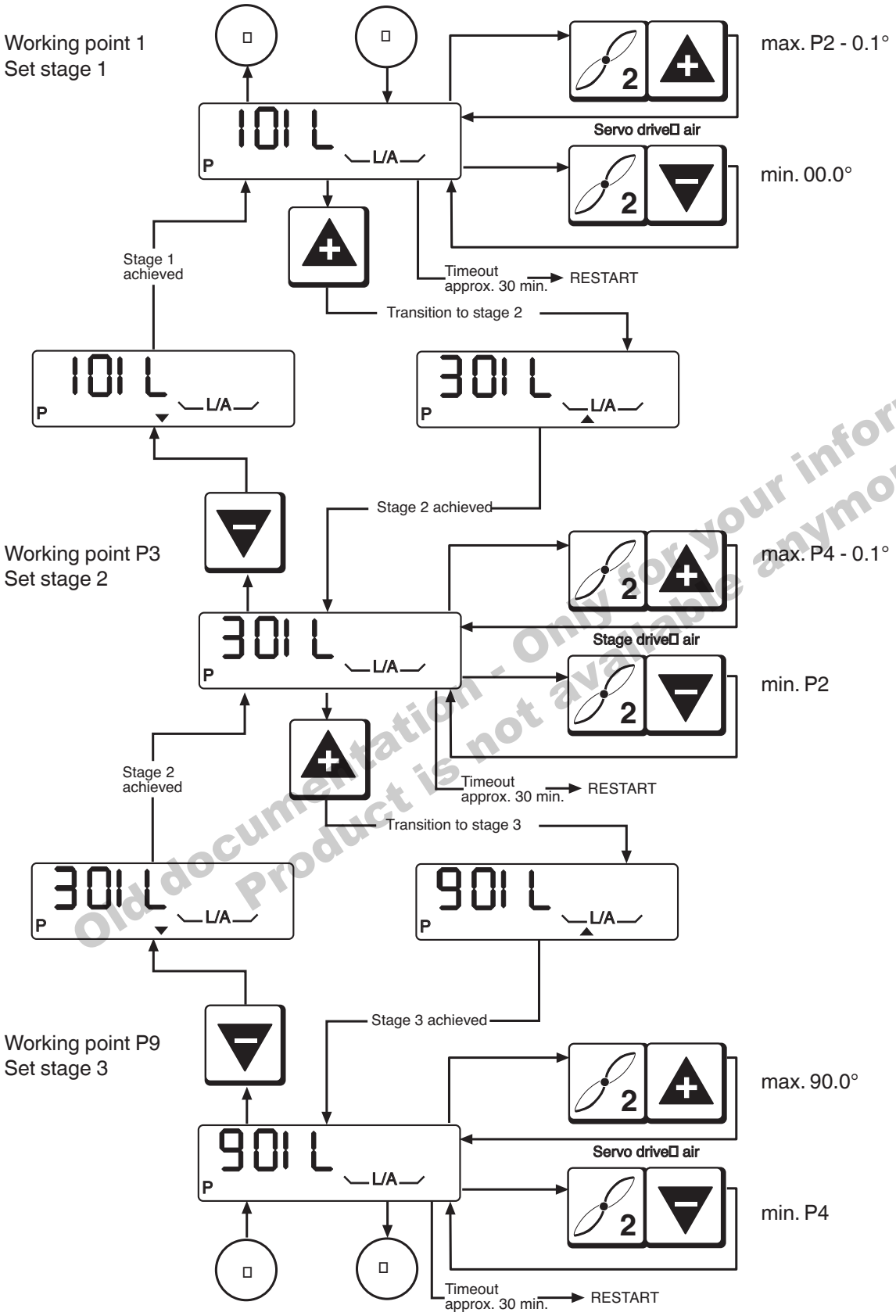

Olddocumentation - Only for your information!
Product is not available anymore!

Printed in Germany / M-BOS • Edition 03.14 • Nr. 231 763

Setup mode
Oil firing, three stage

DUNGS®
Combustion Controls

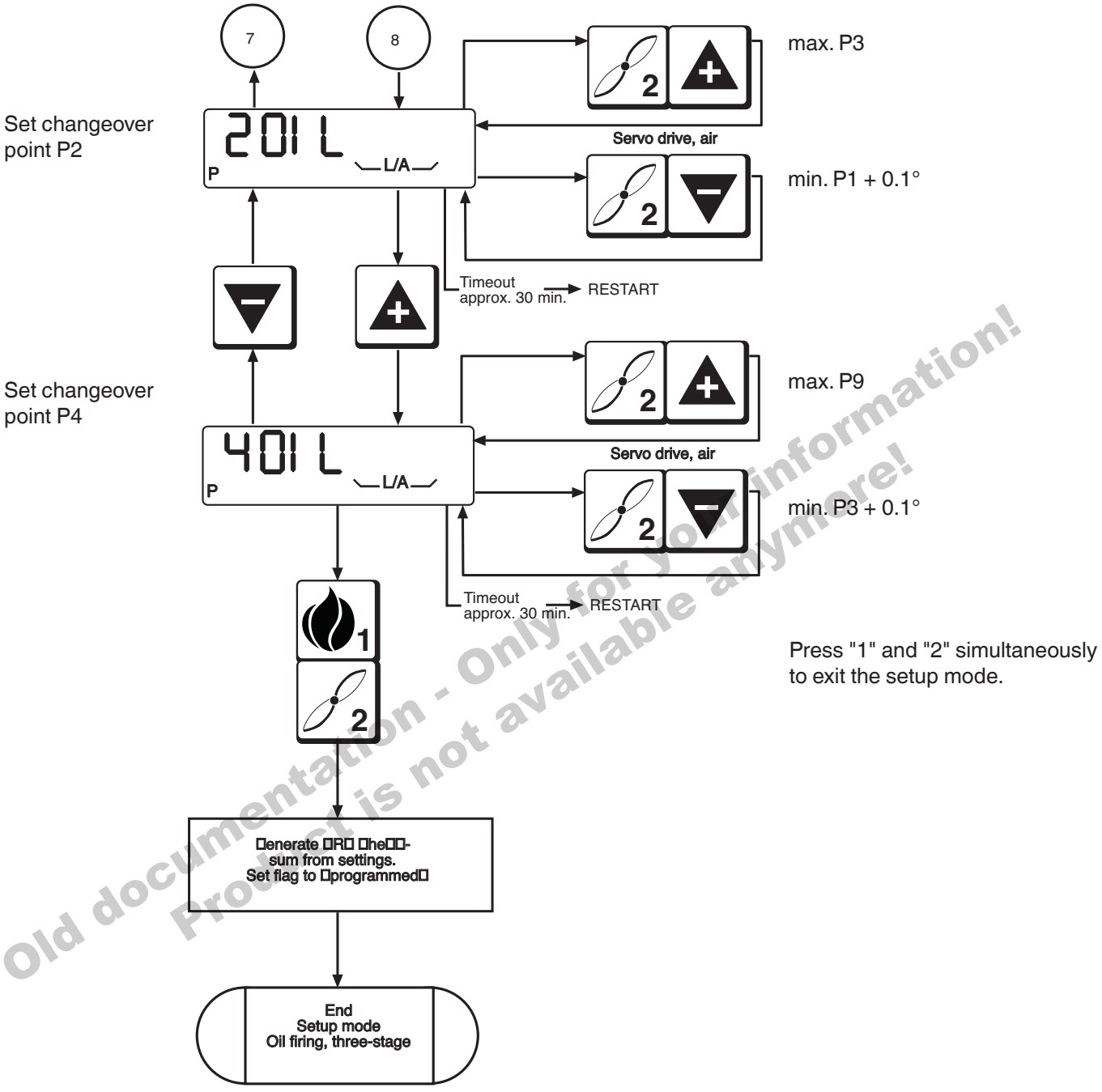

Old documentation - Only for your information! Product is not available anymore!

Printed in Germany / M-BOS • Edition 03.14 • Nr. 231 763

Display in operating mode Gas firing, electronic modulation Gas firing, pneumatic modulation

DUNGS®
Combustion Controls

Display in operating mode, gas firing with electronic modulation and gas firing with pneumatic modulation.
If setup mode is activated, the "P" symbol also appears in the start phase.

Old documentation - Only for your information!
Product is not available anymore!

Printed in Germany / M-BOS • Edition 03.14 • Nr. 231 763

Display in operating mode
Gas firing, electronic modulation
Gas firing, pneumatic modulation

DUNGS®
Combustion Controls

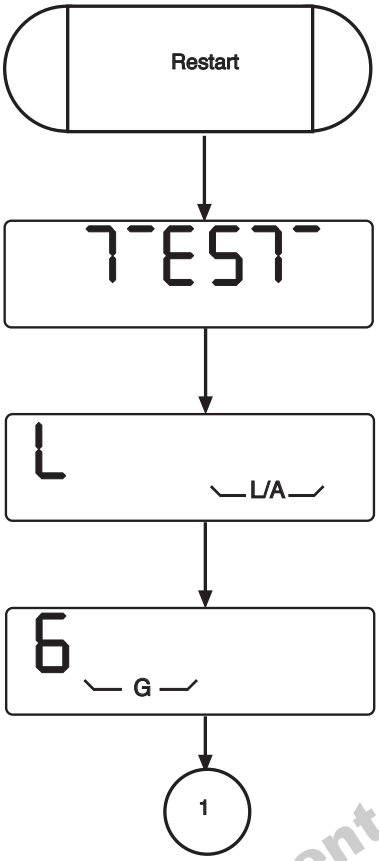

After line-voltage interruption or if a request for heat was pending in stand-by mode.

Internal tests such as ROM test, CPU test, RAM test, etc.

Check servo drive for air and go to reference point.

Check servo drive for gas and go to reference point.
(not applicable for gas firing, pneumatic modulation)

Old documentation - Only for your information! Product is not available anymore!

Printed in Germany / M-BOS • Edition 03.14 • Nr. 231 763

Display in operating mode
Gas firing, electronic modulation
Gas firing, pneumatic modulation

DUNGS®
Combustion Controls

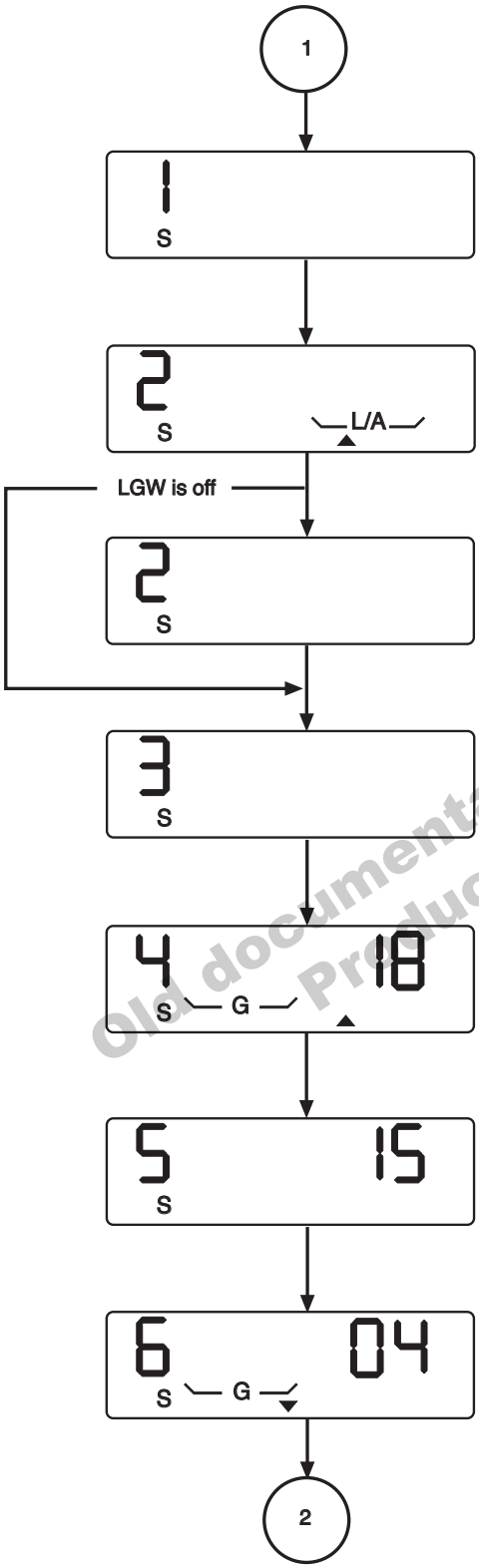

Safety chain and temperature controller are both polled. Process continues if both are closed. Otherwise, go to standby =“OFF“.

Move servo drive for air to characteristic point P9. Idle-position check of air-pressure monitor.

If servo drive for air is at characteristic point P9 and the air-pressure monitor is not in idle position.

Blower running up. Air-pressure monitor not yet closed.

Purging time countdown in seconds. Watchdog loads.

Purging time countdown in seconds. Watchdog pulls up and latches.

While pre-venting is in progress, servo drive for gas goes to ignition point P0 (not applicable for gas firing, pneumatic modulation)
Purging time countdown in seconds.

Old documentation - Only for your information! Product is not available anymore!

Printed in Germany / M-BOS • Edition 03.14 • Nr. 231 763

Display in operating mode
Gas firing, electronic modulation
Gas firing, pneumatic modulation

DUNGS®
Combustion Controls

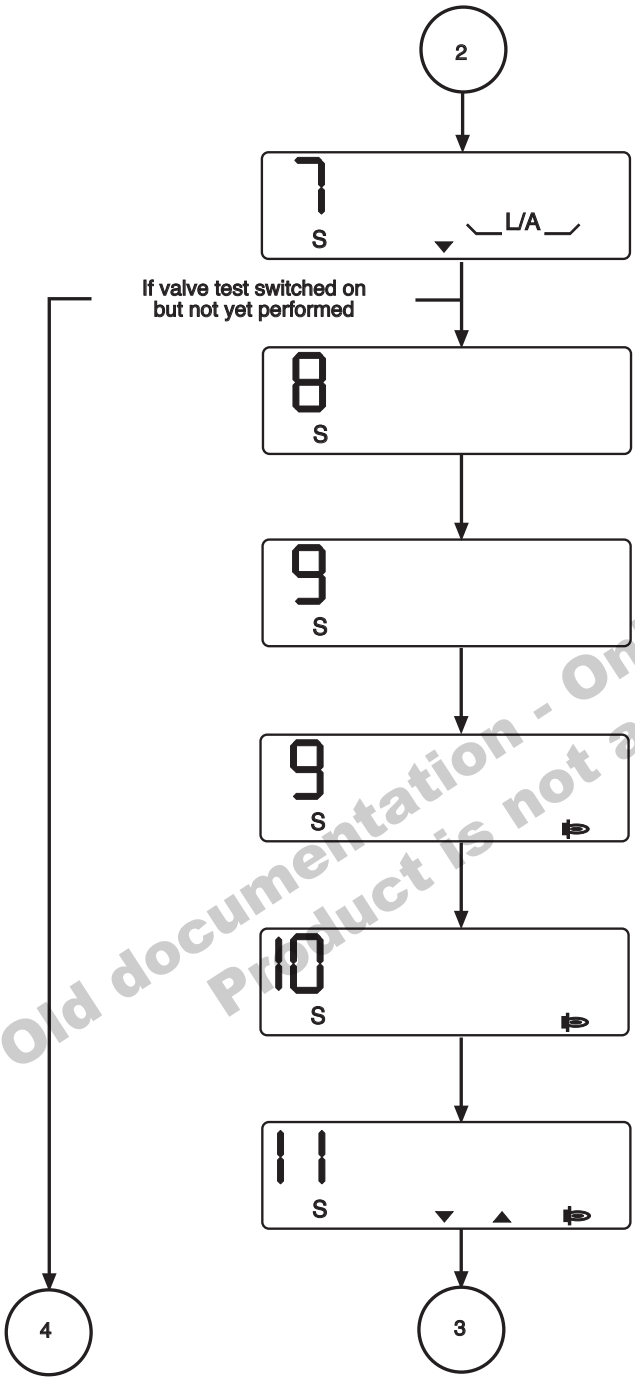

Move servo drive for air to ignition point P0.

Pre-ignition

Safety period without flame message

Safety period with flame message

Stabilization time
At ignition point P0

Go to characteristic point P1 from ignition point P0: Up arrow or Down arrow lights up accordingly.
Controller enable time expires.

Old documentation - Only for your information!
Product is not available anymore!

Printed in Germany / M-BOS • Edition 03.14 • Nr. 231 763

Display in operating mode
Gas firing, electronic modulation
Gas firing, pneumatic modulation

DUNGS®
Combustion Controls

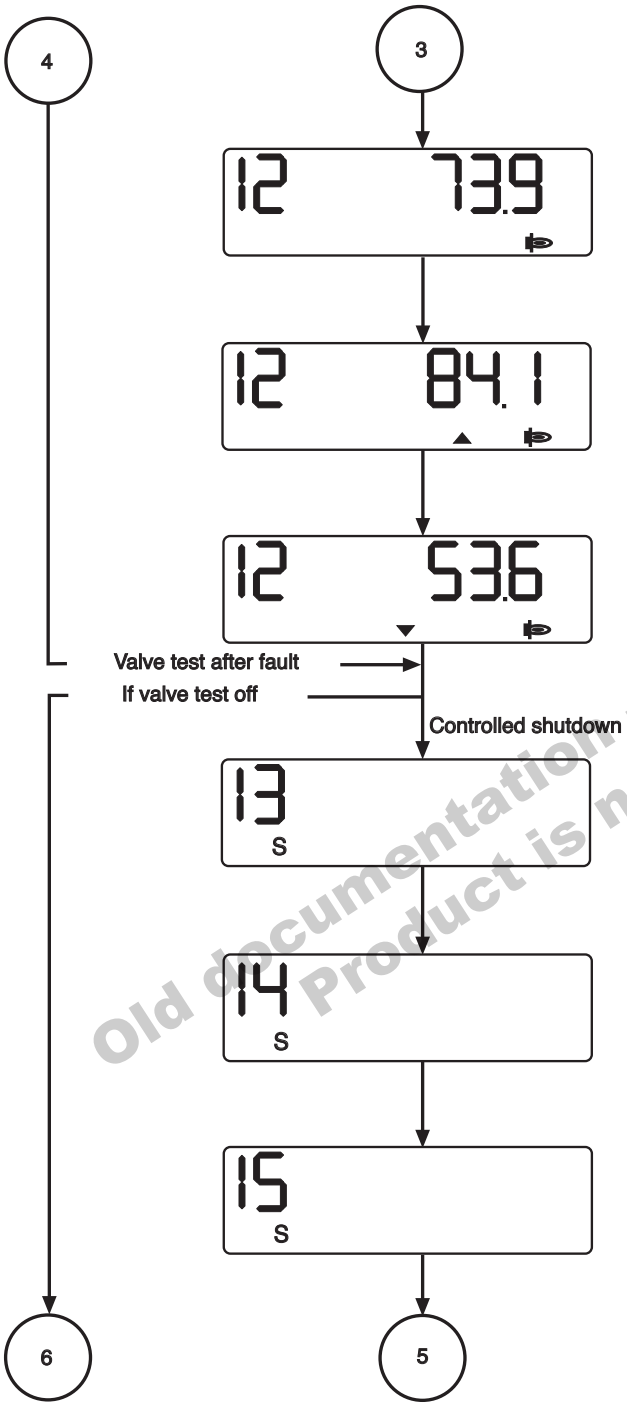

Operating position.
Shows position of the servo drive for air in XX.X°

Operating position.
Increase output or go to minimum output point.

Operating position.
Reduce output.

Valve test, phase 1 (emptying).
The "Flame" symbol might also light up.
If no post-purging time has been set, the brackets G or brackets L/A symbols and the Down arrow might also light.

Valve test, phase 2 (test time V1).
When the post-purging time expires, the brackets G or brackets L/A symbols and the Down arrow might also light up while the servo drive for air is moving to the standby position.

Valve test, phase 3.
When the post-purging time expires, the brackets G or brackets L/A symbols and the Down arrow might also light up while the servo drive for air is moving to the standby position.

Old documentation - Only for your information! Product is not available anymore!

Printed in Germany / M-BOS • Edition 03.14 • Nr. 231 763

Display in operating mode
Gas firing, electronic modulation
Gas firing, pneumatic modulation

DUNGS®
Combustion Controls

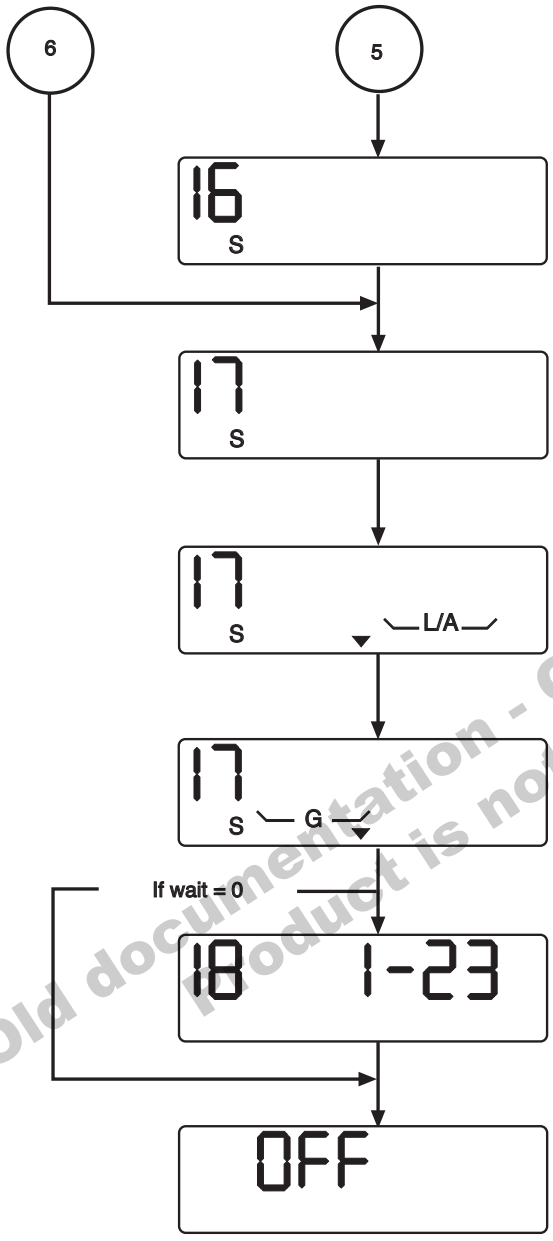

Valve test, phase 4 (test time V2). When the post-purging time expires, the brackets G or brackets L/A symbols and the Down arrow might also light up while the servo drive for air is moving to the standby position.

Post-venting with blower in operation.

Post-venting ended. The blower is off. The servo drive for air goes to the standby position.

With electronic modulation in gas firing mode only. Post-ventilation terminated. The blower is OFF. Gas servomotor is moved into idling position.

If a wait is programmed or if low gas supply is detected during the start phase, the wait is counted down. Minutes on the left, seconds on the right.

Standby, wait for request for heat. Setup mode and parameterisation mode can be activated. See setup mode, "Gas firing, electronic modula-tion", "Gas firing, pneumatic modula-tion", and "Display in parameterisation mode".

Old documentation - Only for your information!
Product is not available anymore!

Printed in Germany / M-BOS • Edition 03.14 • Nr. 231 763

Display in operating mode
Oil firing, three stage

DUNGS®
Combustion Controls

Display in operating mode, oil firing, three stage.
If setup mode is activated, the "P" symbol also appears in the start phase.

Old documentation - Only for your information!
Product is not available anymore!

Printed in Germany / M-BOS • Edition 03.14 • Nr. 231 763

Display in operating mode
Oil firing, three stage

DUNGS®
Combustion Controls

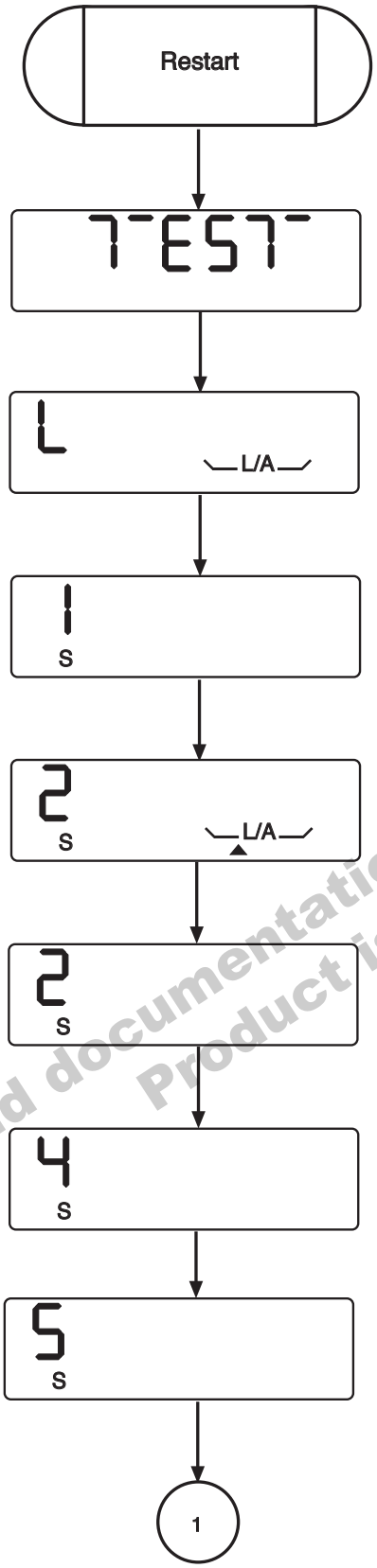

After line-voltage interruption or if a request for heat was pending in standby mode.

Internal tests such as ROM test, CPU test, RAM test, etc.

Check servo drive for air and go to reference point.

Safety circuit and temperature controller are both activated. Process continues if both are closed; other-wise, go to standby =“OFF“.

Move servo drive for air to characteristic point P9. Idle-state check of air-pressure monitor.

If servo drive for air is at characteristic point P9 and the air-pressure monitor is not in idle position.

Watchdog loads.

Pre-vent
Purging time countdown in seconds. Watchdog pulls up and latches.

Old documentation - Only for your information! Product is not available anymore!

Printed in Germany / M-BOS • Edition 03.14 • Nr. 231 763

Display in operating mode
Oil firing, three stage

DUNGS®
Combustion Controls

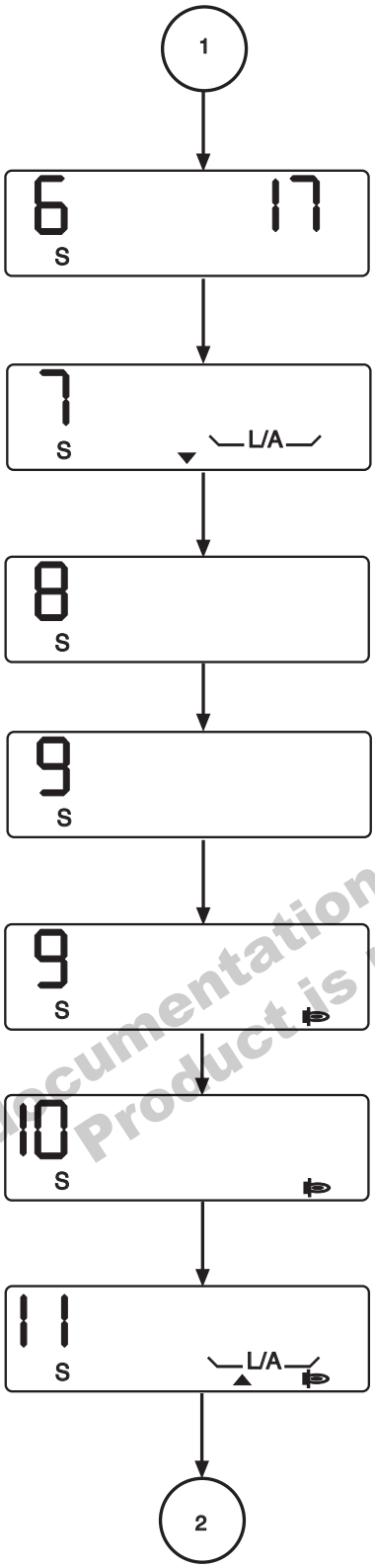

Pre-vent
Purging time countdown in seconds.

Move servo drive for air to ignition point P0.

Wait 2 seconds at ignition point

Safety period without flame message

Safety period with flame message

Stabilization time

Go to characteristic point P1 from ignition point P0

Old documentation - Only for your information! Product is not available anymore!

Printed in Germany / M-BOS • Edition 03.14 • Nr. 231 763

Display in operating mode
Oil firing, three stage

DUNGS®
Combustion Controls

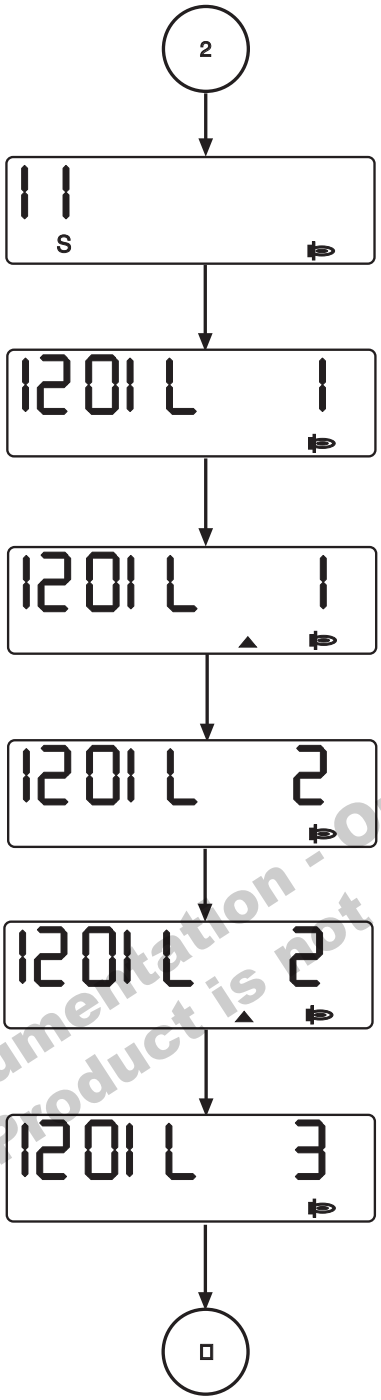

Wait for controller enable time to expire

Operation
Stage 1

Operation
Changeover point between stages 1 and 2

Operation
Stage 2

Operation
Changeover point between stages 2 and 3

Operation
Stage 3

Old documentation - Only for your information! Product is not available anymore!

Printed in Germany / M-BOS • Edition 03.14 • Nr. 231 763

Display in operating mode
Oil firing, three stage

DUNGS®
Combustion Controls

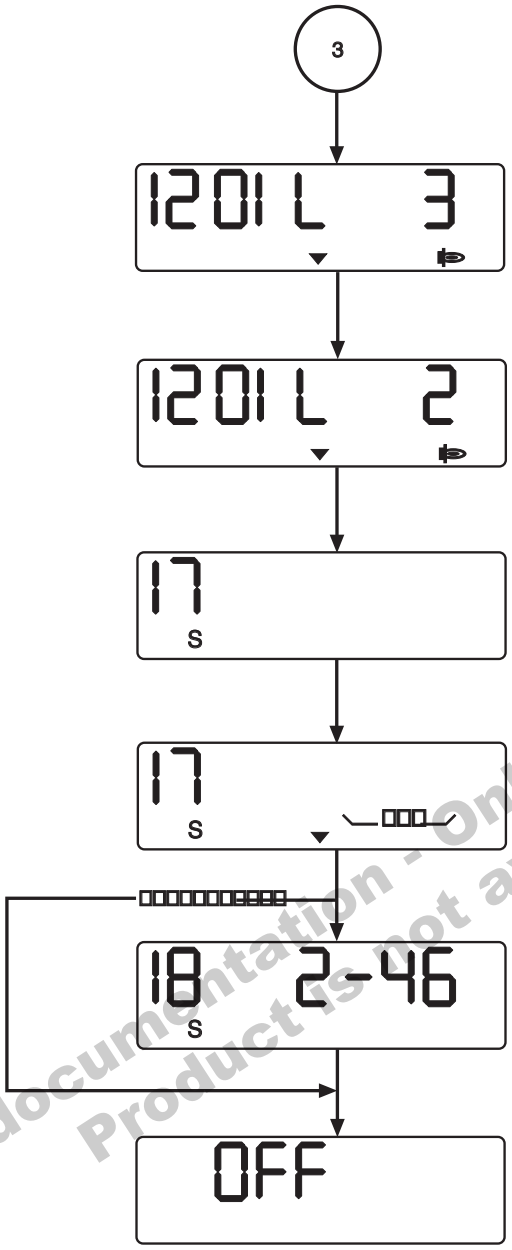

Operating position.
Changeover point between stages 3 and 2

Operating position.
Changeover point between stages 2 and 1

Post-venting with blower in operation.

Post-venting ended. The blower is off. The servo drive for air goes to the standby position.

If a wait is programmed, the wait is counted down. Minutes on the left, seconds on the right.

Standby, wait for request for heat.
Setup mode and parameterisation mode can be activated. See setup mode, "Oil firing, two stage" and "Display in parameterisation mode".

Old documentation - Only for your information!
Product is not available anymore!

Printed in Germany / M-BOS • Edition 03.14 • Nr. 231 763

Display in information mode
Gas firing, electronic modulation
Gas firing, pneumatic modulation
Oil firing, three stage

DUNGS®
Combustion Controls

The information-mode display can be accessed only from the operating-mode display. It can be called up irrespective of burner status and provides information on:

Current counts for

- Fuel quantities
- Operating hours
- Starts

Information about:

- Software status
- Date of production
- Machine serial number

This display mode is exited after a 20-second timeout or if the readout is scrolled past the last item.

Old documentation - Only for your information!
Product is not available anymore!

Printed in Germany / M-BOS • Edition 03.14 • Nr. 231 763

Display in information mode
Gas firing, electronic modulation
Gas firing, pneumatic modulation
Oil firing, three stage

DUNGS®
Combustion Controls

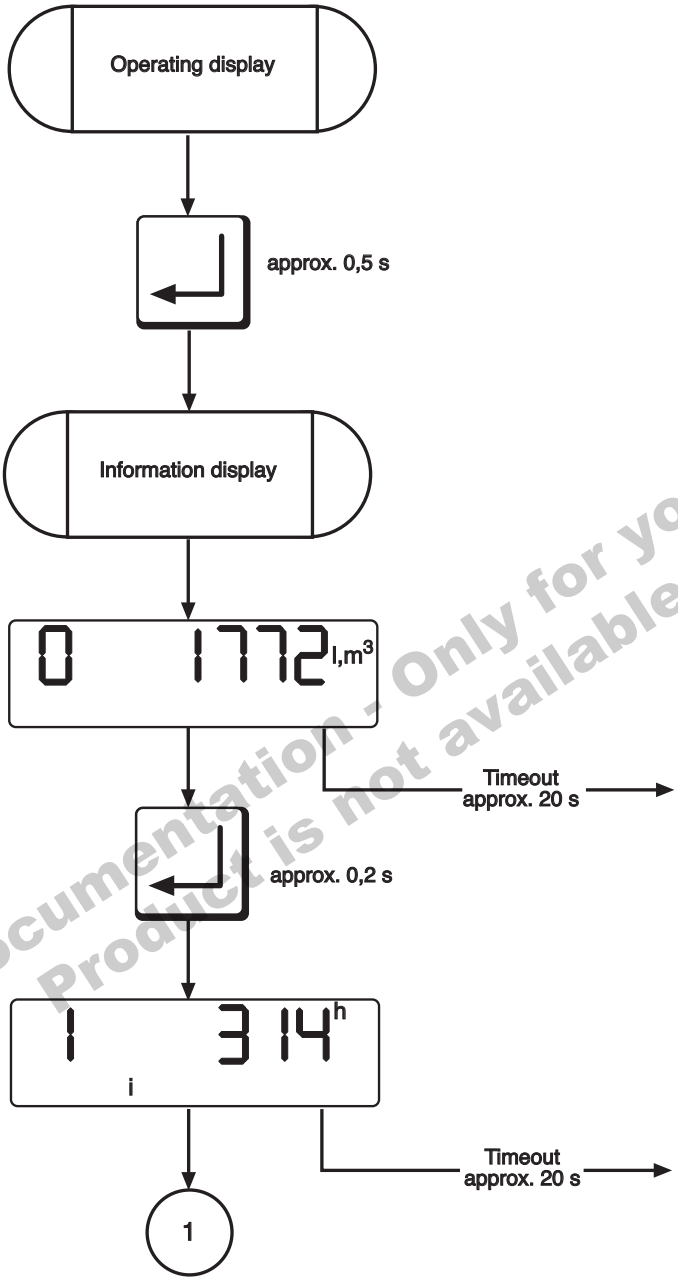

Press for approx. 0.5 s until the "i" symbol is displayed.
Release button.

Total fuel consumption in liters of oil or cubic meters of gas.

Total operating hours for gas-fired burners or operating hours in stage 1 for oil-fired burners.

Old documentation - Only for your information! Product is not available anymore!

Printed in Germany / M-BOS • Edition 03.14 • Nr. 231 763

Display in information mode
Gas firing, electronic modulation
Gas firing, pneumatic modulation
Oil firing, three stage

DUNGS®
Combustion Controls

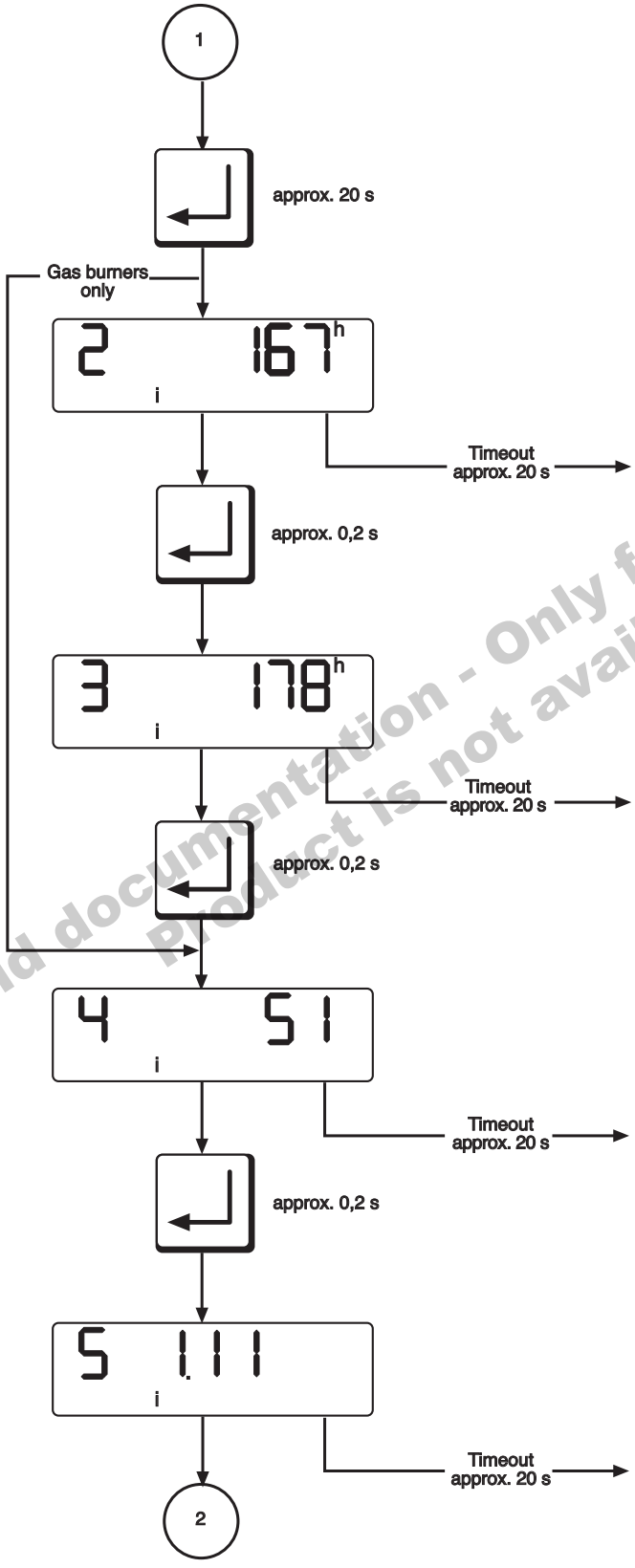

Total operating hours in stage 2 for oil-fired burners.

Total operating hours in stage 3 for oil-fired burners.

Number of successful starts, in other words flame detected after safety period expires.

The version number of the software running in the automatic controller.

Old documentation - Only for your information! Product is not available anymore!

Printed in Germany / M-BOS • Edition 03.14 • Nr. 231 763

Display in information mode
Gas firing, electronic modulation
Gas firing, pneumatic modulation
Oil firing, three stage

DUNGS®
Combustion Controls

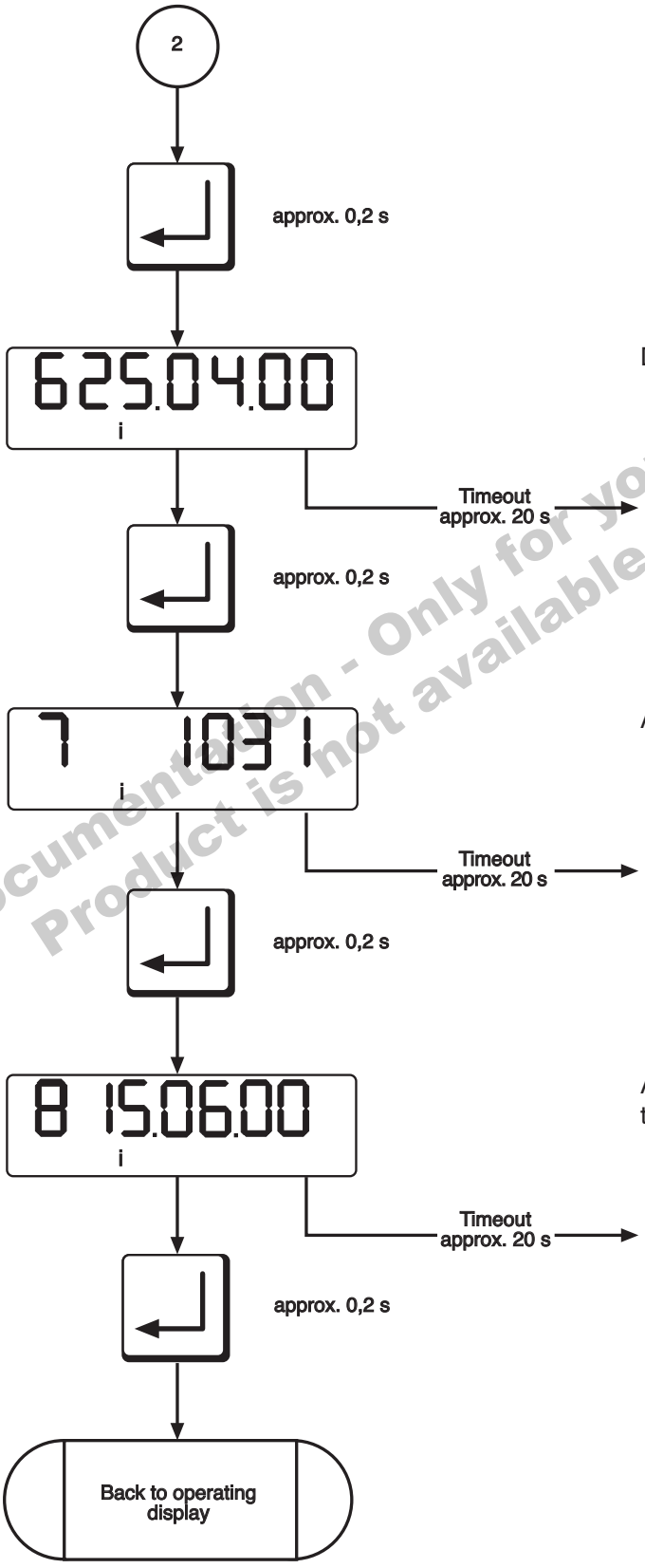

Date of compilation of the software.

Automatic controller's serial number.

Automatic controller's date of production (date of works testing).

Old documentation - Only for your information! Product is not available anymore!

Printed in Germany / M-BOS • Edition 03.14 • Nr. 231 763

Display in service mode Gas firing, electronic modulation

DUNGS®
Combustion Controls

The service-mode display can be accessed only from the operat-ing-mode display.

The service display can be called irrespective of the burner status and provides information on the characteristic stored in the EEPROM. The following data are displayed:

- The characteristic points P0 - P9
- The last 6 error messages
- The test times of the valve testing system
- Flame quality
- The e-BUS address
- The switch position of the valve testing system
- The limits of the modulation range
- Controller address
- The controller enable time

This display mode is exited after a 20-second timeout or if the readout is scrolled past the last item.

Old documentation - Only for your information!
Product is not available anymore!

Printed in Germany / M-BOS • Edition 03.14 • Nr. 231 763

Display in service mode Gas firing, electronic modulation

DUNGS®
Combustion Controls

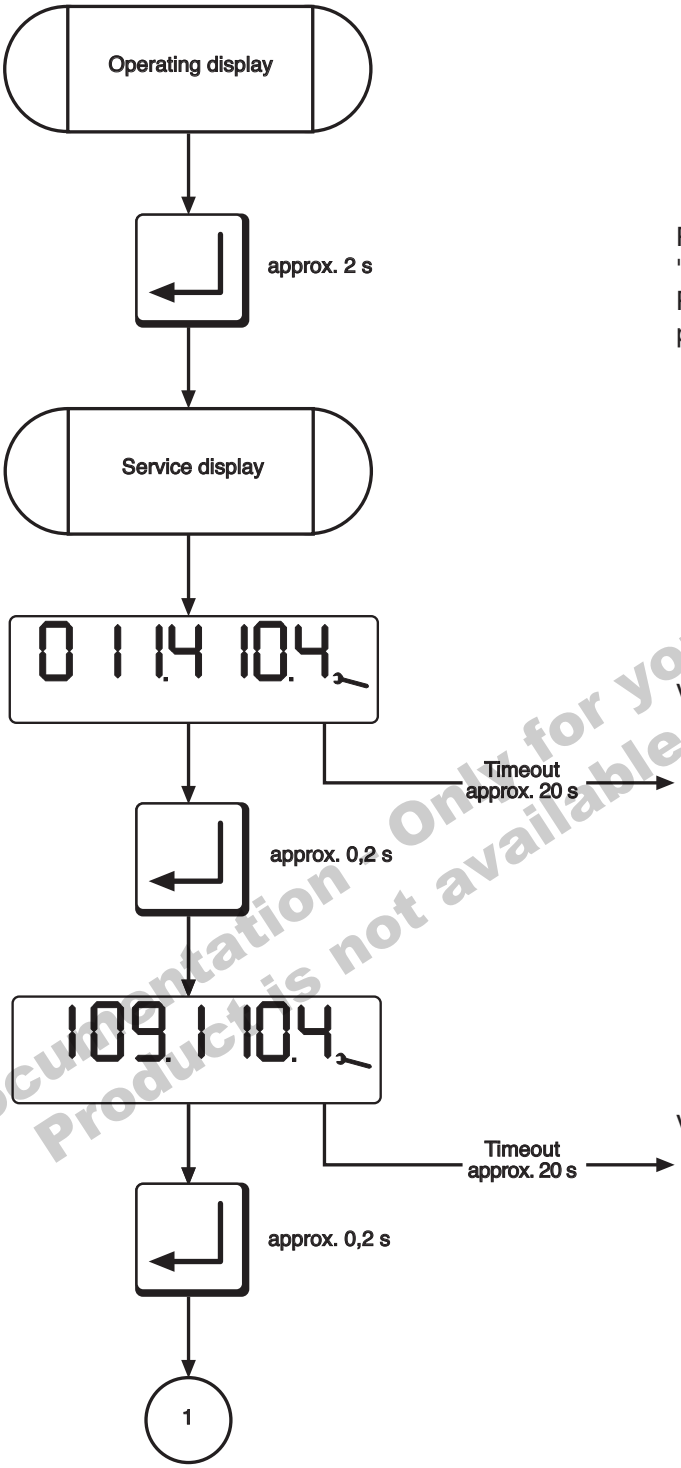

Press for approx. 0.5 s until the "Wrench" symbol is displayed. Release button. The "i" symbol is displayed for approx. 1.5 s beforehand.

Values of ignition point P0

Values of characteristic point P1

Old documentation. Only for your information! Product is not available anymore!

Printed in Germany / M-BOS • Edition 03.14 • Nr. 231 763

Display in service mode Gas firing, electronic modulation

DUNGS®
Combustion Controls

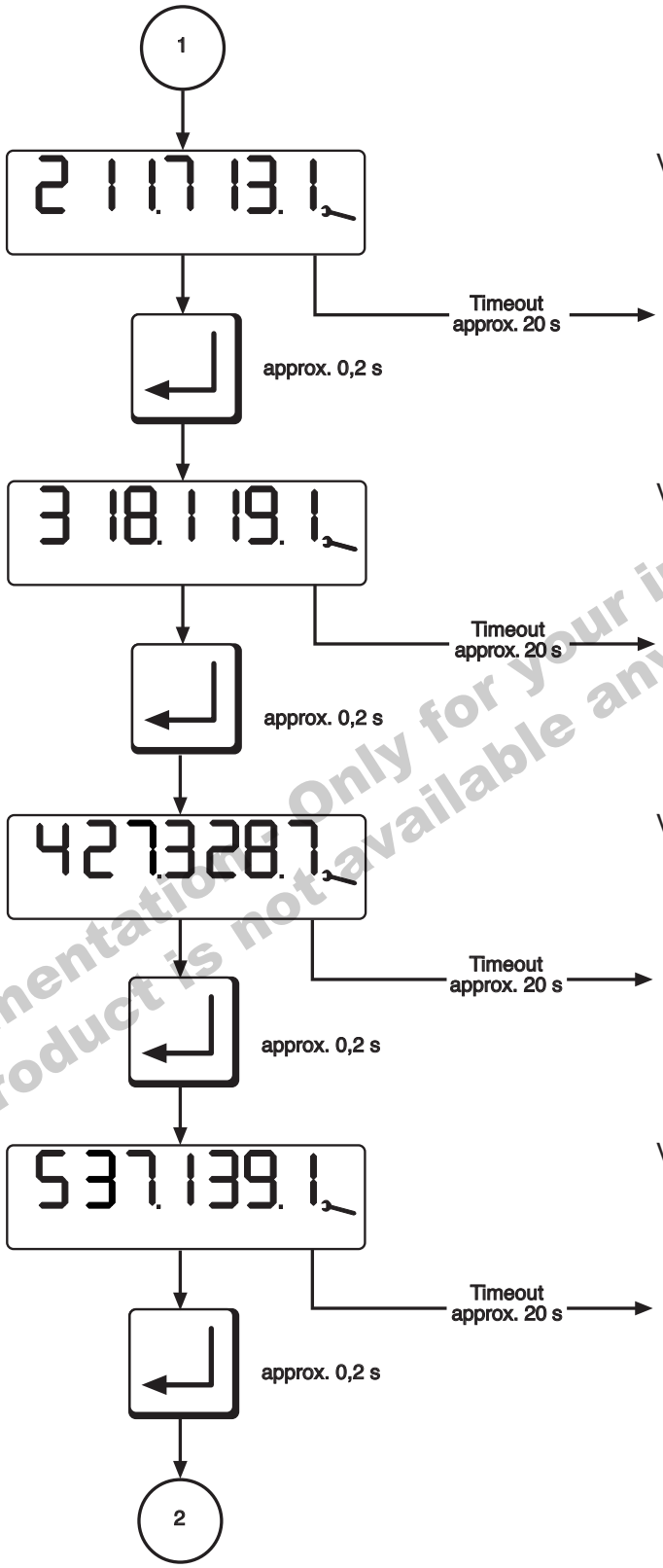

Old documentation! Only for your information! Product is not available anymore!

Printed in Germany / M-BOS • Edition 03.14 • Nr. 231 763

Display in service mode
Gas firing, electronic modulation

DUNGS®
Combustion Controls

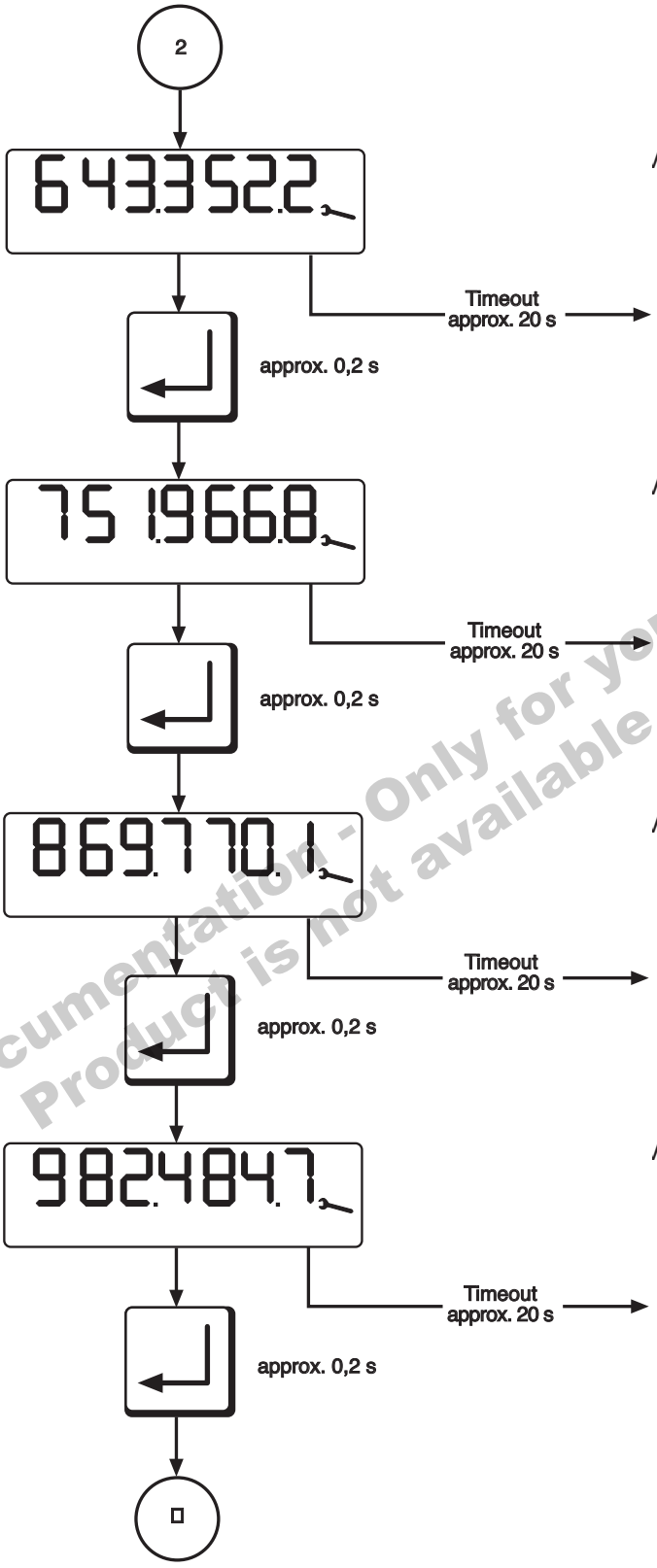

Old documentation - Only for your information! Product is not available anymore!

Printed in Germany / M-BOS • Edition 03.14 • Nr. 231 763

Display in service mode Gas firing, electronic modulation

DUNGS®
Combustion Controls

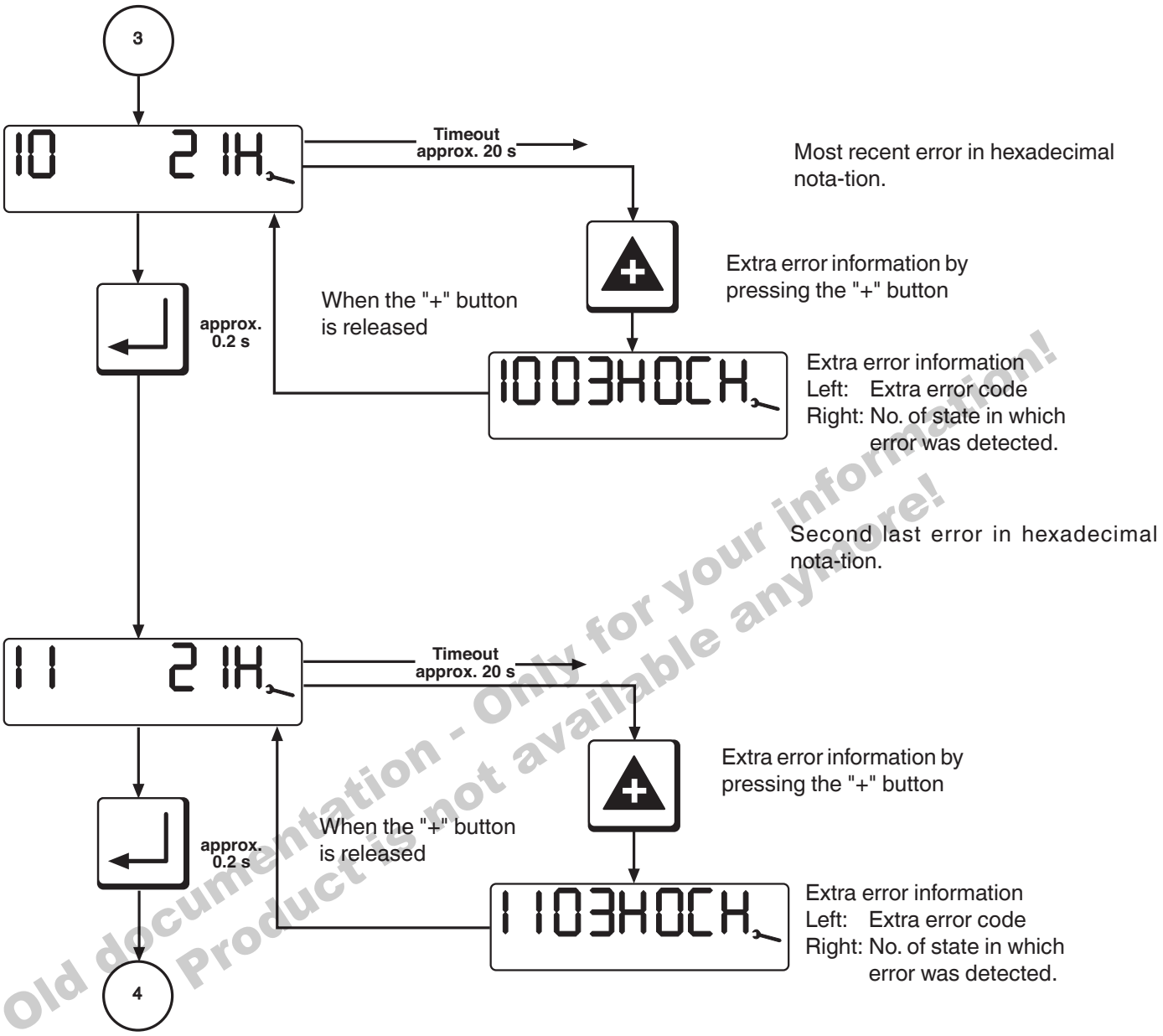

Old documentation - Only for your information! Product is not available anymore!

Printed in Germany / M-BOS • Edition 03.14 • Nr. 231 763

Display in service mode Gas firing, electronic modulation

DUNGS®
Combustion Controls

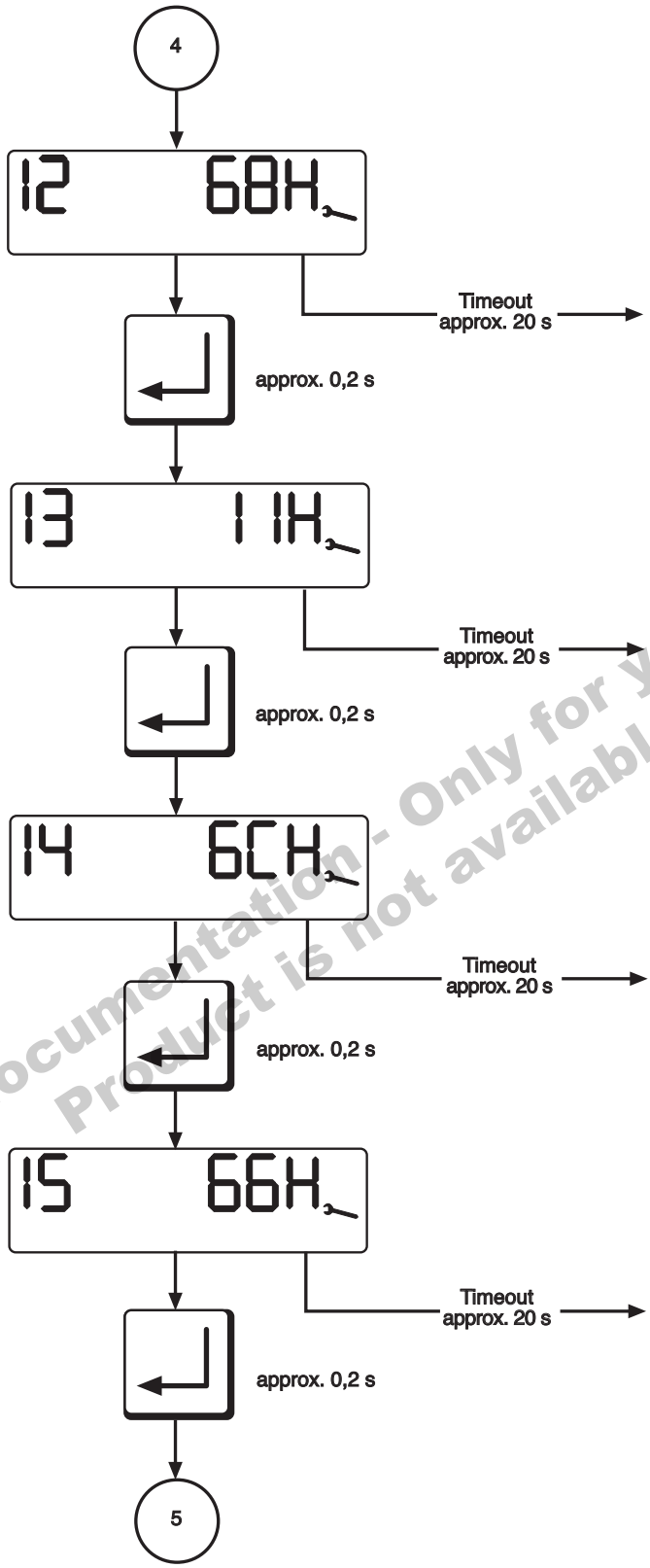

Third last error in hexadecimal notation.

Fourth last error in hexadecimal notation.

Fifth last error in hexadecimal notation.

Sixth last error in hexadecimal notation.

Old documentation - Only for your information! Product is not available anymore!

Printed in Germany / M-BOS • Edition 03.14 • Nr. 231 763

Display in service mode Gas firing, electronic modulation

DUNGS®
Combustion Controls

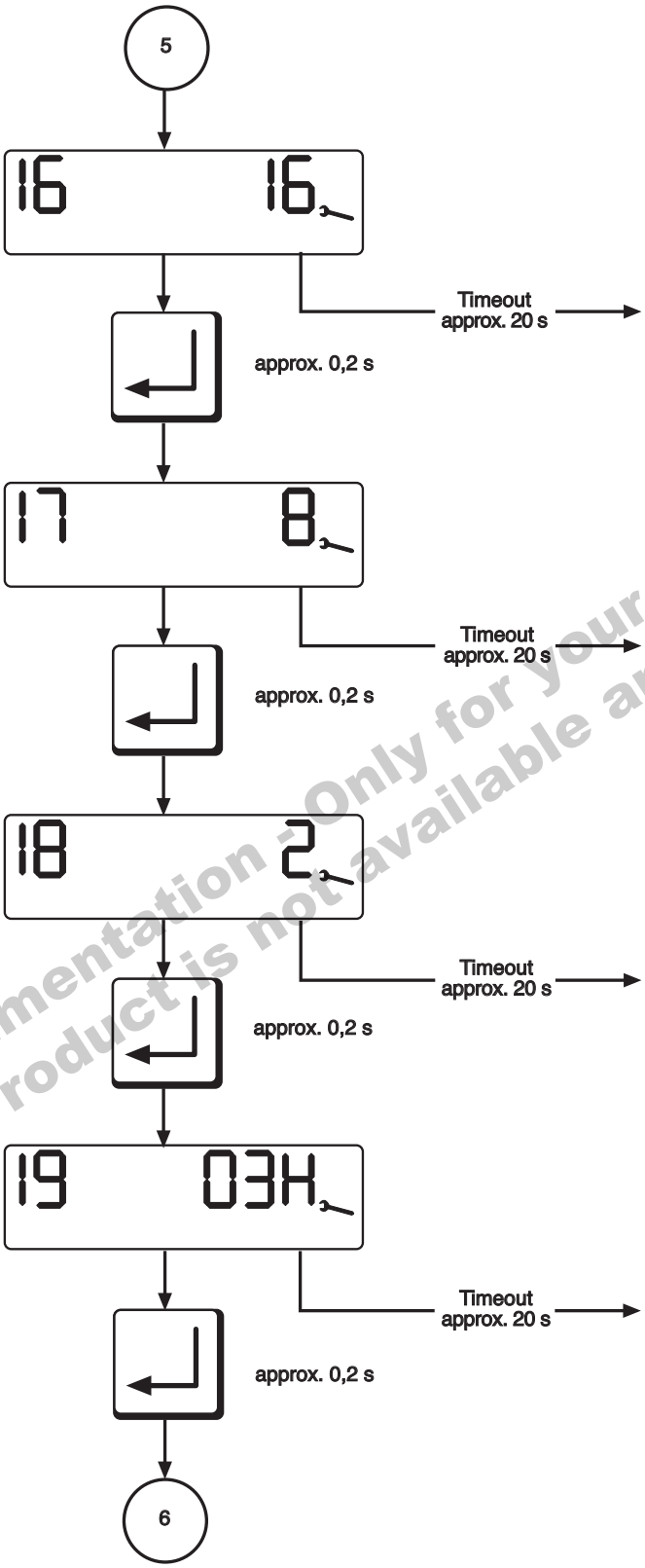

Testing time, valve Y2

Testing time, valve Y3

Flame quality indication 0 - 4
4 corresponds to approx. µA > 13
3 corresponds to approx. µA < 13 / > 6
2 corresponds to approx. µA < 6 / > 2,5
1 corresponds to approx. µA < 2,5
0 corresponds no flame

The eBUS address of this automatic controller

Old documentation - Only for your information! Product is not available anymore!

Printed in Germany / M-BOS • Edition 03.14 • Nr. 231 763

Display in service mode
Gas firing, electronic modulation

DUNGS®
Combustion Controls

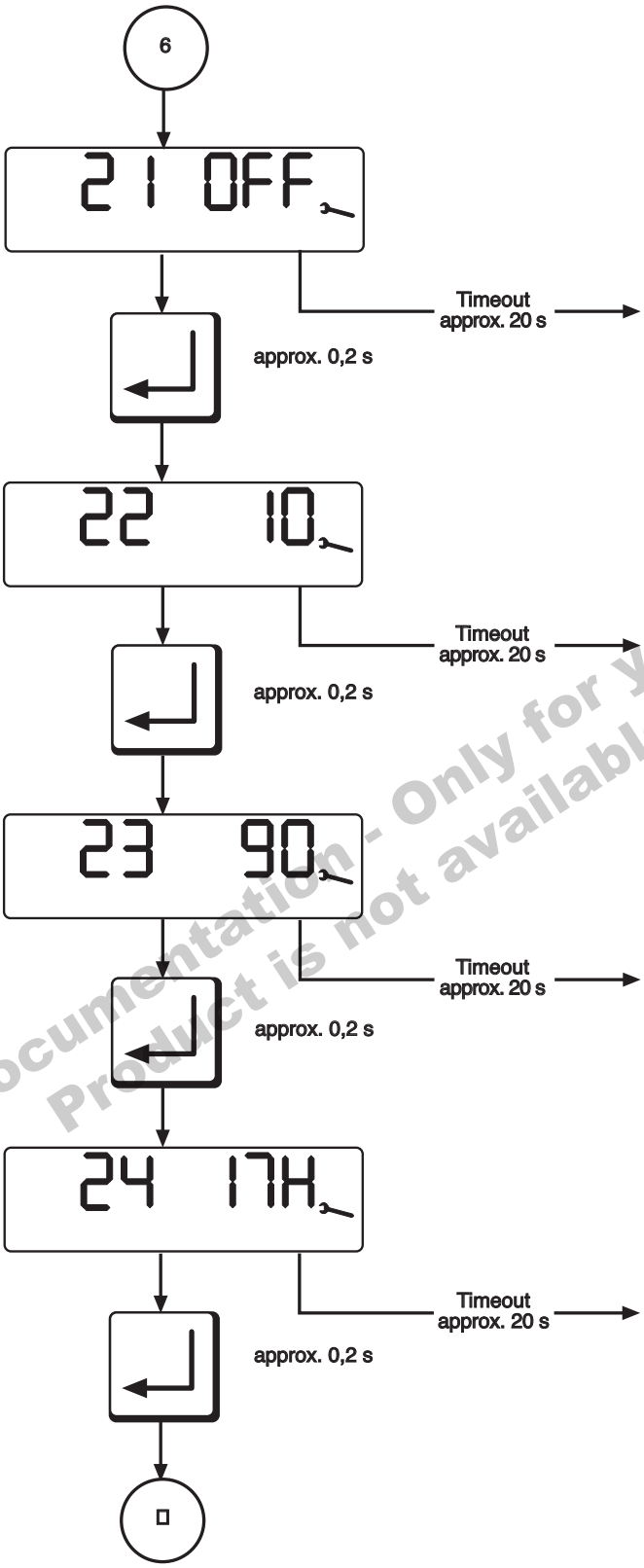

Mode indicator: integrated valve testing system is ON or OFF.

Display of the lower limit of the modulation range
Range 0…200
equivalent to 0…100 % burner output

Display of the upper limit of the modulation range
Range 0…100
equivalent to 0…100 % burner output

Controller address of this automatic controller
In the OFF position, no controller address is assigned

Old documentation - Only for your information! Product is not available anymore!

Printed in Germany / M-BOS • Edition 03.14 • Nr. 231 763

Display in service mode
Gas firing, electronic modulation

DUNGS®
Combustion Controls

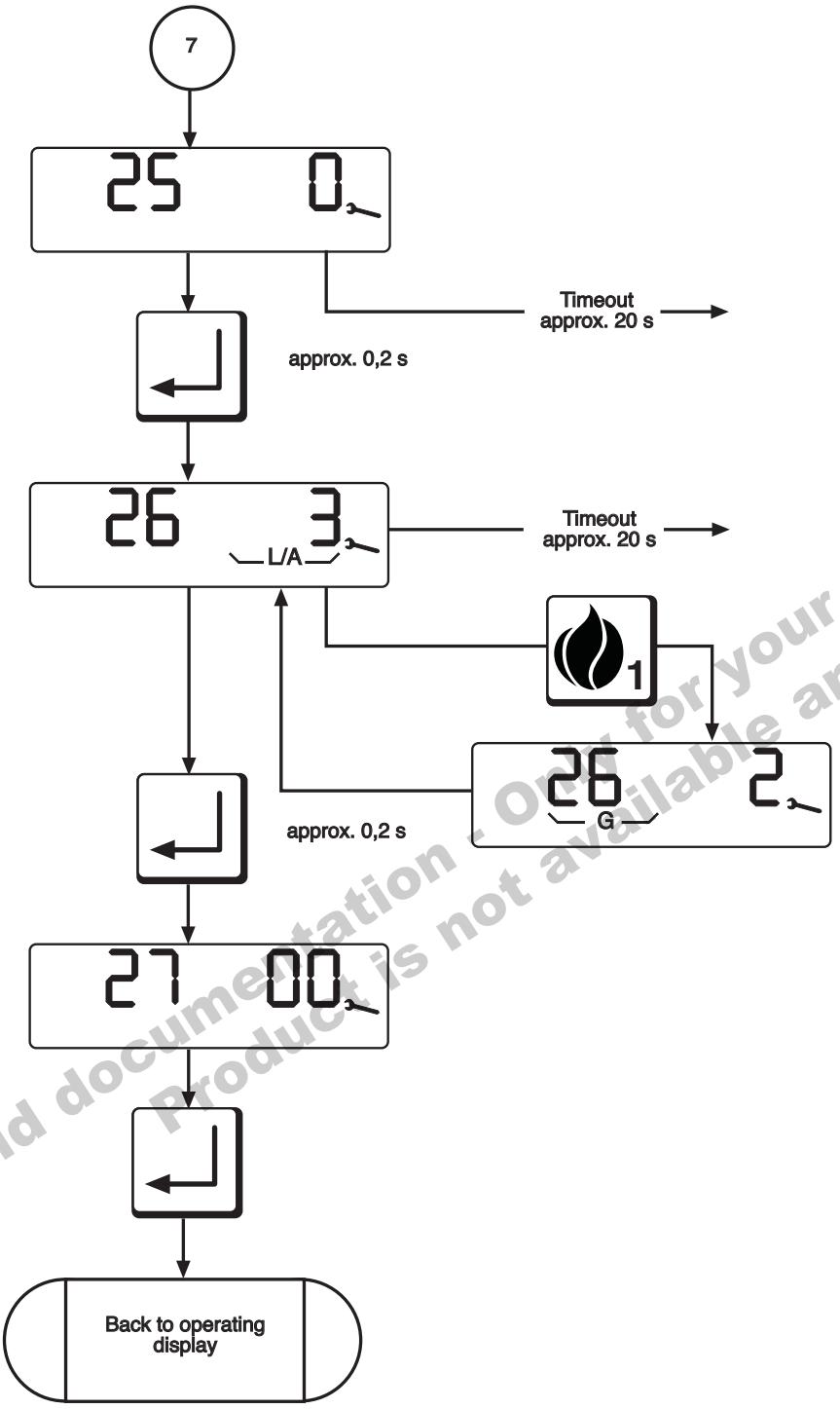

Display modulation delay 0-15
0 = no delay
15 = maximum delay

Display starting points - air and gas
0-3

Display controller enable time
0..59 s

Old documentation - Only for your information!
Product is not available anymore!

Printed in Germany / M-BOS • Edition 03.14 • Nr. 231 763

Display in service mode
Gas firing, pneumatic modulation

DUNGS®
Combustion Controls

The service-mode display can be accessed only from the operat-ing-mode display.

The service display can be called irrespective of the burner status and provides information on the characteristic stored in the EEPROM.
The following data are displayed:

- The characteristic points P0, P1 and P9
- The last 6 error messages
- The test times of the valve testing system
- Flame quality
- The e-BUS address
- The switch position of the valve testing system
- Controller address

This display mode is exited after a 20-second timeout or if the readout is scrolled past the last item.

Old documentation - Only for your information!
Product is not available anymore!

Printed in Germany / M-BOS • Edition 03.14 • Nr. 231 763

Display in service mode Gas firing, pneumatic modulation

DUNGS®
Combustion Controls

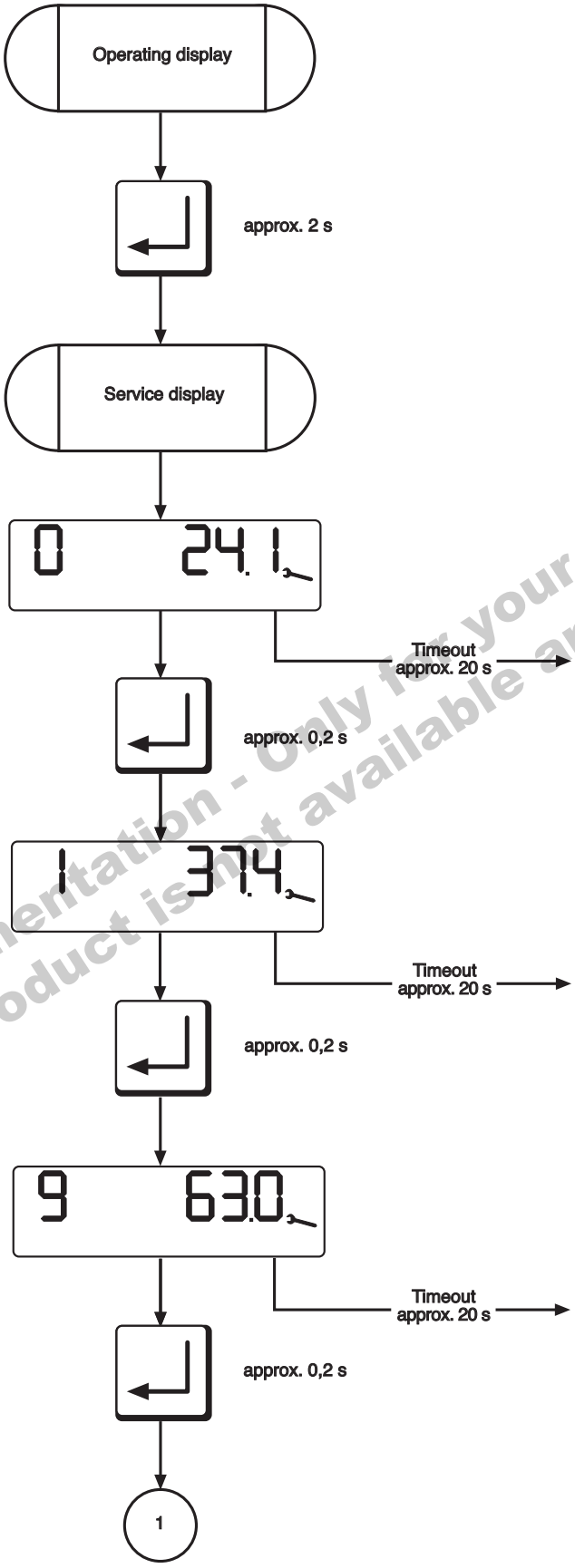

Press for approx. 2 s until the "Wrench" symbol is displayed.
Release button. The "i" symbol is displayed for approx. 1.5 s beforehand.

Value of ignition point P0 for gas burner with pneumatic modulation.

Minimum point (P1) of the characteristic for gas burner with pneumatic modulation.

Value of the maximum point (P9) of the characteristic for gas burner with pneumatic modulation.

Old documentation - Only for your information! Product is not available anymore!

Printed in Germany / M-BOS • Edition 03.14 • Nr. 231 763

Display in service mode
Gas firing, pneumatic modulation

DUNGS®
Combustion Controls

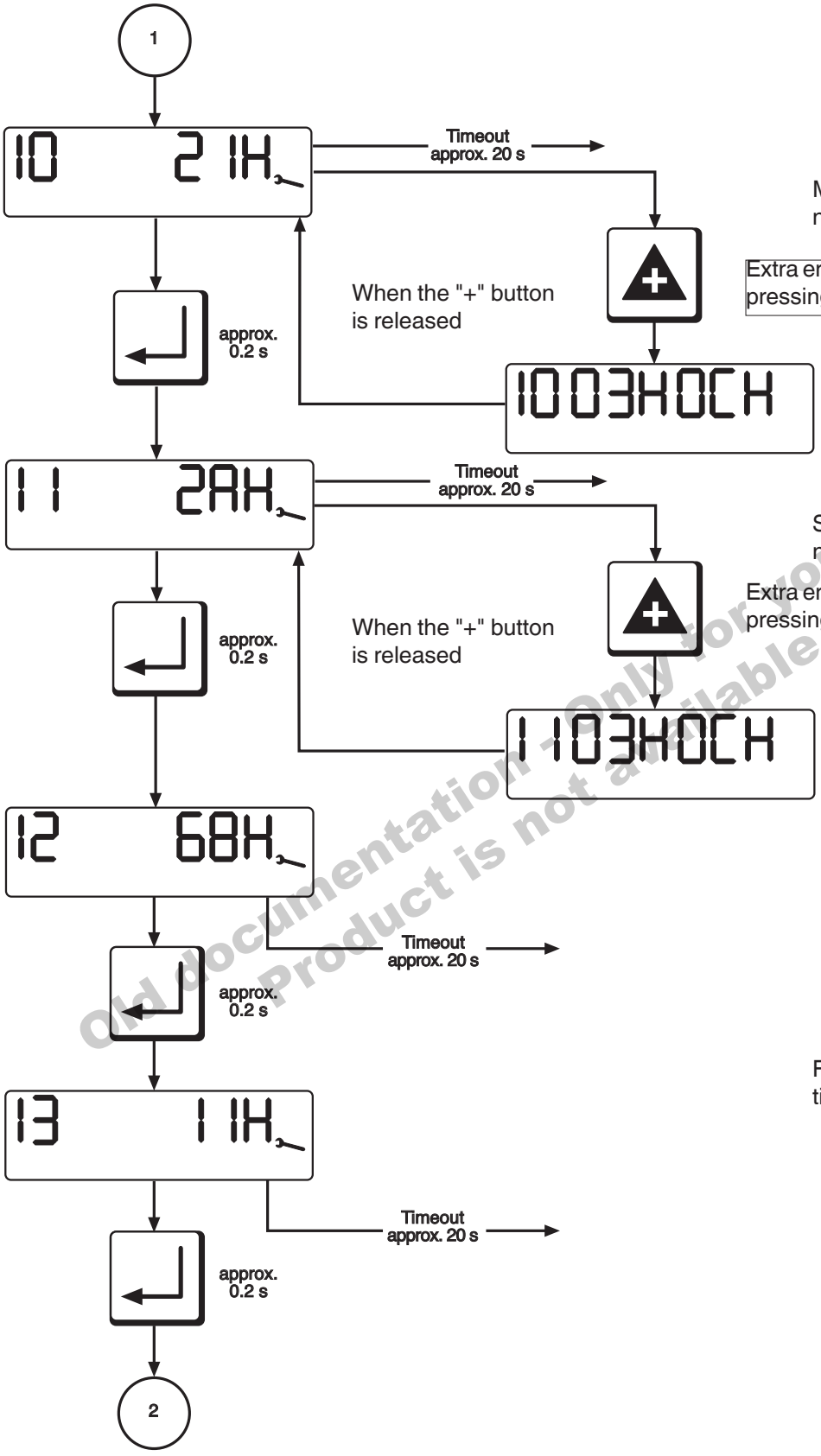

Most recent error in hexadecimal nota-tion.

Extra error information by pressing the "+" button

Extra error information
Left: Extra error code
Right: No. of state in which error was detected.

Second last error in hexadecimal nota-tion.

Extra error information by pressing the "+" button

Extra error information
Left: Extra error code
Right: No. of state in which error was detected.

Third last error in hexadecimal nota-tion.

Fourth last error in hexadecimal nota-tion.

Old documentation - Only for your information! Product is not available anymore!

Printed in Germany / M-BOS • Edition 03.14 • Nr. 231 763

Display in service mode Gas firing, pneumatic modulation

DUNGS®
Combustion Controls

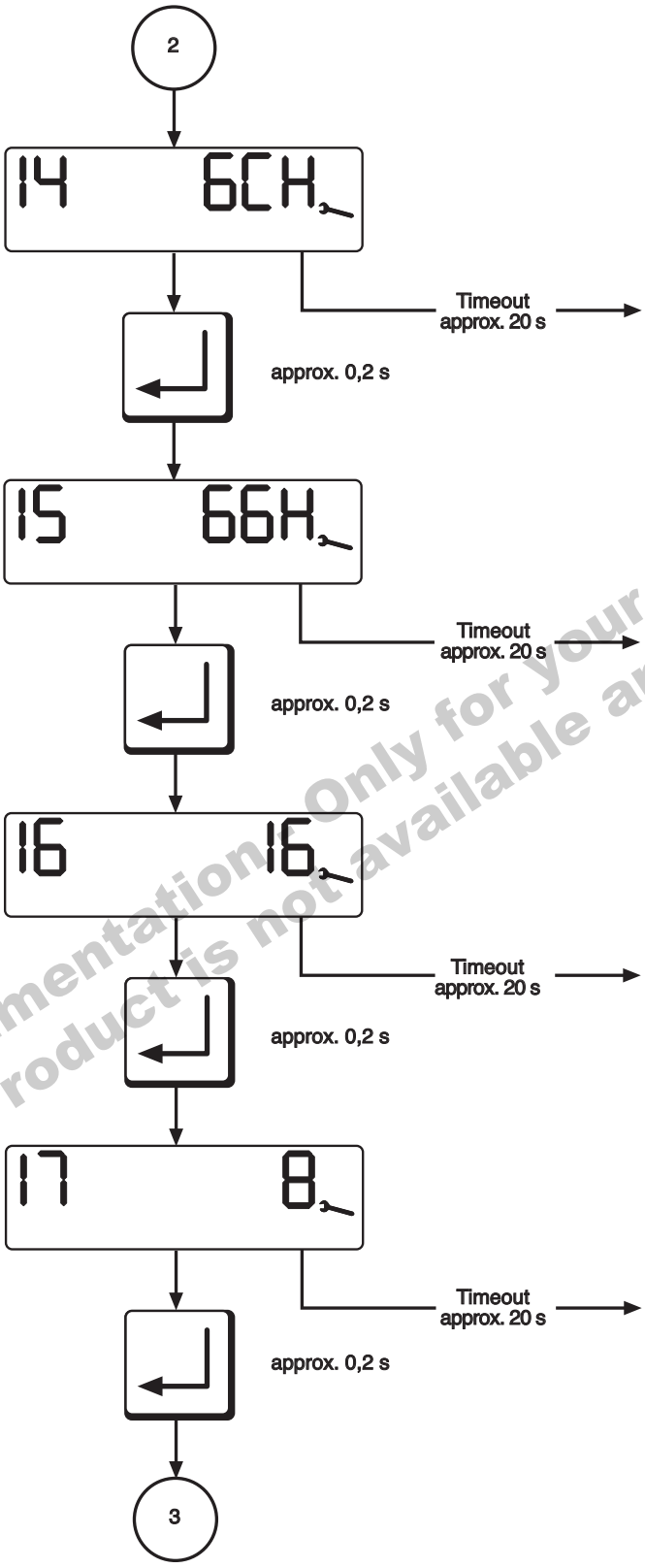

Fifth last error in hexadecimal notation.

Sixth last error in hexadecimal notation.

Testing time, valve Y2

Testing time, valve Y3

Old documentation! Only for your information! Product is not available anymore!

Printed in Germany / M-BOS • Edition 03.14 • Nr. 231 763

Display in service mode
Gas firing, pneumatic modulation

DUNGS®
Combustion Controls

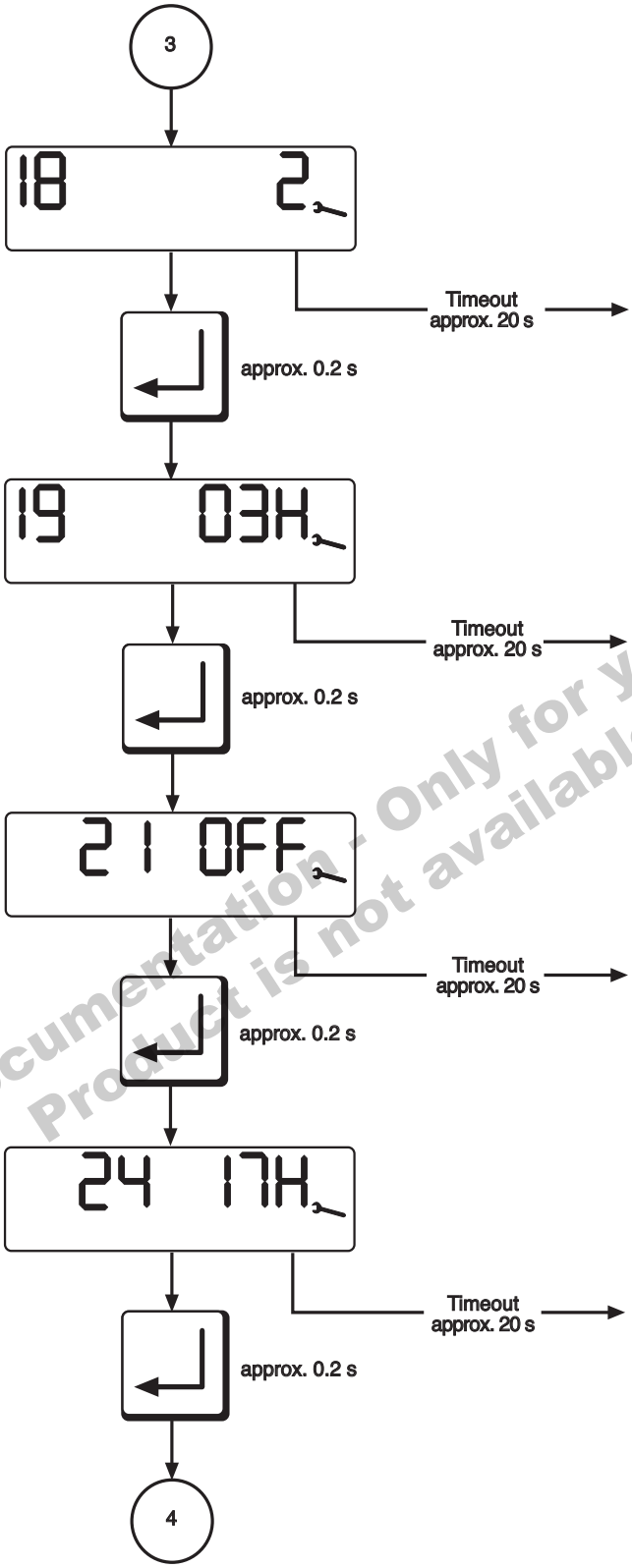

Flame quality indication 0 - 4
4 corresponds to approx. µA > 13
3 corresponds to approx. µA < 13 / > 6
2 corresponds to approx. µA < 6 / > 2,5
1 corresponds to approx. µA < 2,5
0 corresponds no flame

The eBUS address of this automatic controller

Mode indicator: integrated valve testing system is ON or OFF.

Controller address of this automatic controller
In the OFF position, no controller address is assigned

Old documentation - Only for your information! Product is not available anymore!

Printed in Germany / M-BOS • Edition 03.14 • Nr. 231 763

Display in service mode
Gas firing, pneumatic modulation

DUNGS®
Combustion Controls

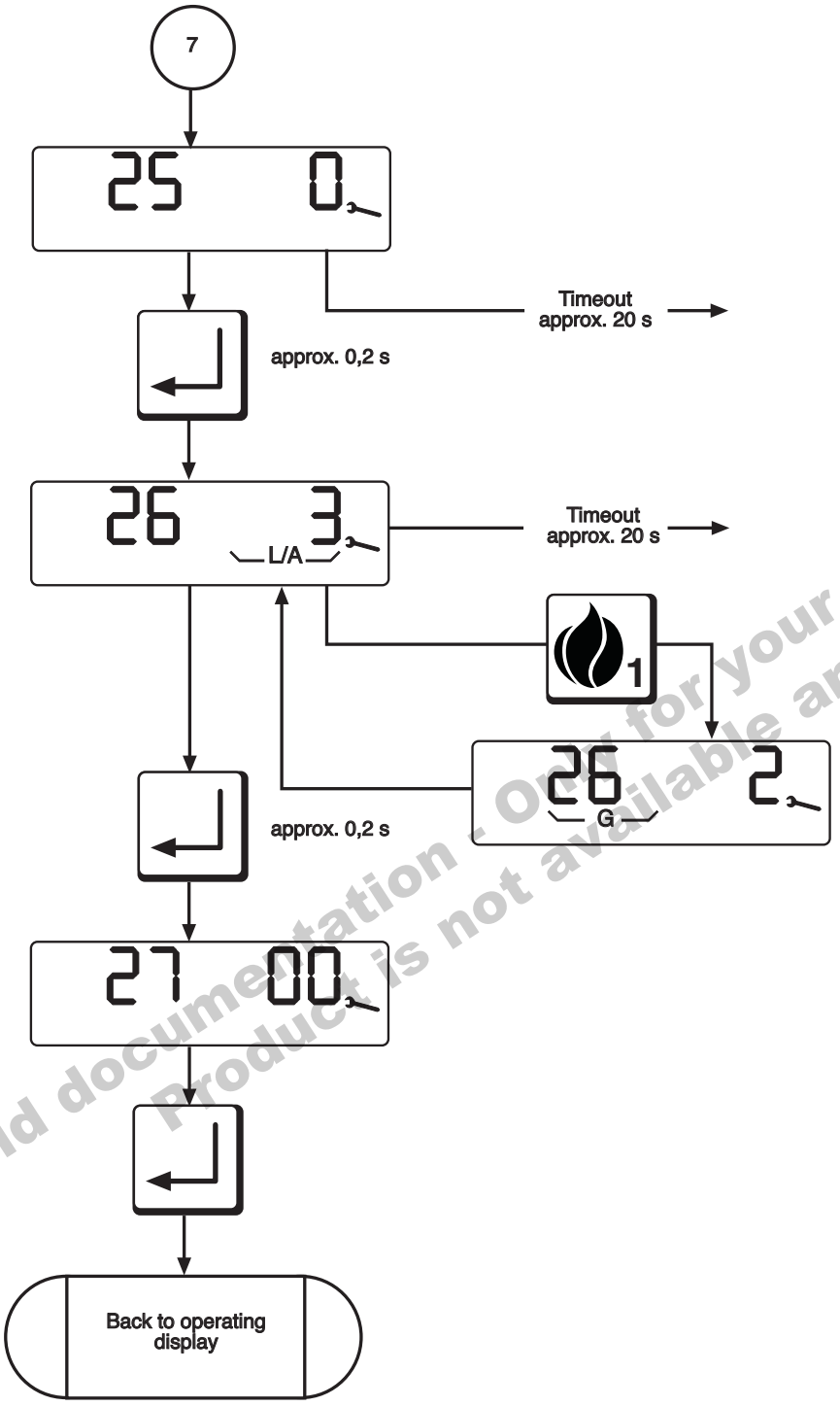

Display modulation delay 0-15
0 = no delay
15 = maximum delay

Display starting points - air and gas
0-3

Display controller enable time
0..59 s

Old documentation - Only for your information!
Product is not available anymore!

Printed in Germany / M-BOS • Edition 03.14 • Nr. 231 763

Display in service mode
Oil firing, three stage

DUNGS®
Combustion Controls

The service-mode display can be accessed only from the operat-ing-mode display.

The service display can be called irrespective of the burner status and provides information on the characteristic stored in the EEPROM.
The following data are displayed:

- The characteristic points P0, P1, P3 and P9
- The changeover points P2, P4
- The last 6 error messages
- Flame quality
- The e-BUS address
- The switch position of the monitor function
- Controller address

This display mode is exited after a 20-second timeout or if the readout is scrolled past the last item.

Old documentation - Only for your information!
Product is not available anymore!

Printed in Germany / M-BOS • Edition 03.14 • Nr. 231 763

Display in service mode
Oil firing, three stage

DUNGS®
Combustion Controls

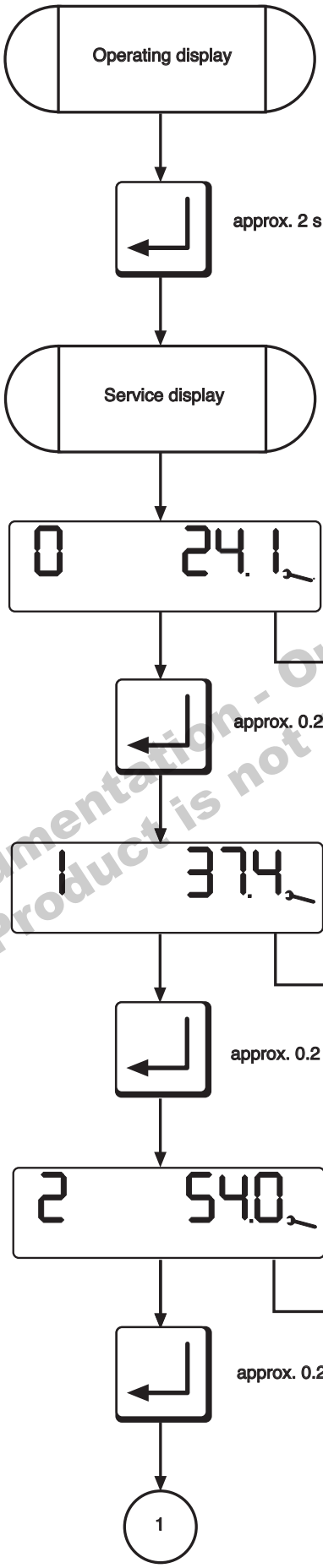

Press for approx. 0.5 s until the "Wrench" symbol is displayed. Release button. The "i" symbol is displayed for approx. 1.5 s beforehand.

Value of ignition point P0 for oil burner, three-stage.

Value of working point, stage 1 (P1) for oil burner, three-stage.

Value of changeover point P2 for changeover between stage 1 and stage 2 for oil burner, three-stage.

Old documentation - Only for your information! Product is not available anymore!

Printed in Germany / M-BOS • Edition 03.14 • Nr. 231 763

Display in service mode
Oil firing, three stage

DUNGS®
Combustion Controls

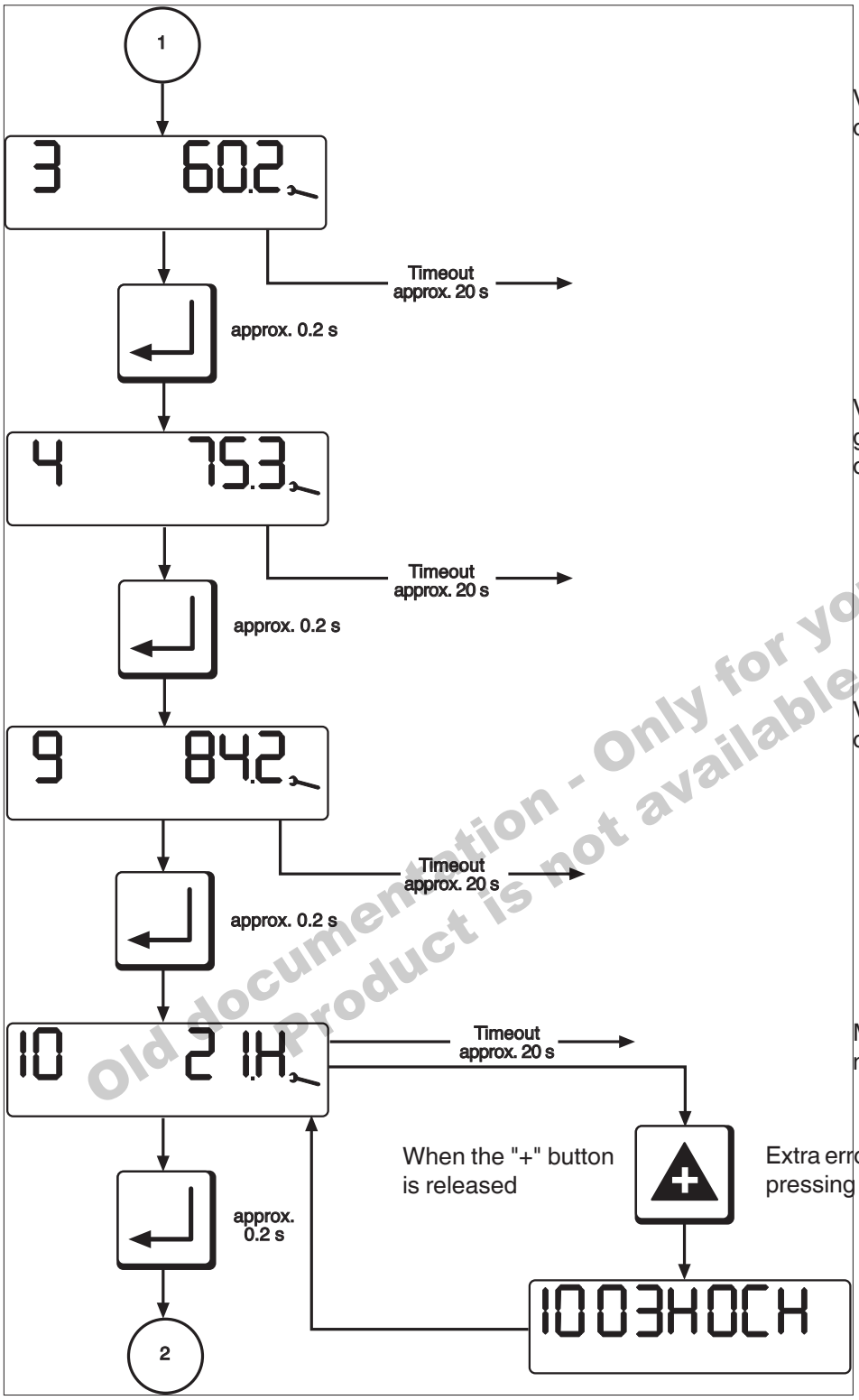

Value of working point, stage 2 (P3) for oil burner, three-stage.

Value of changeover point P4 for changeover between stage 2 and stage 3 for oil burner, three-stage.

Value of working point, stage 3 (P9) for oil burner, three-stage.

Most recent error in hexadecimal nota-tion.

Extra error information by pressing the "+" button

Extra error information
Left: Extra error code
Right: No. of state in which error was detected.

Old documentation - Only for your information! Product is not available anymore!

Printed in Germany / M-BOS • Edition 03.14 • Nr. 231 763

Display in service mode
Oil firing, three stage

DUNGS®
Combustion Controls

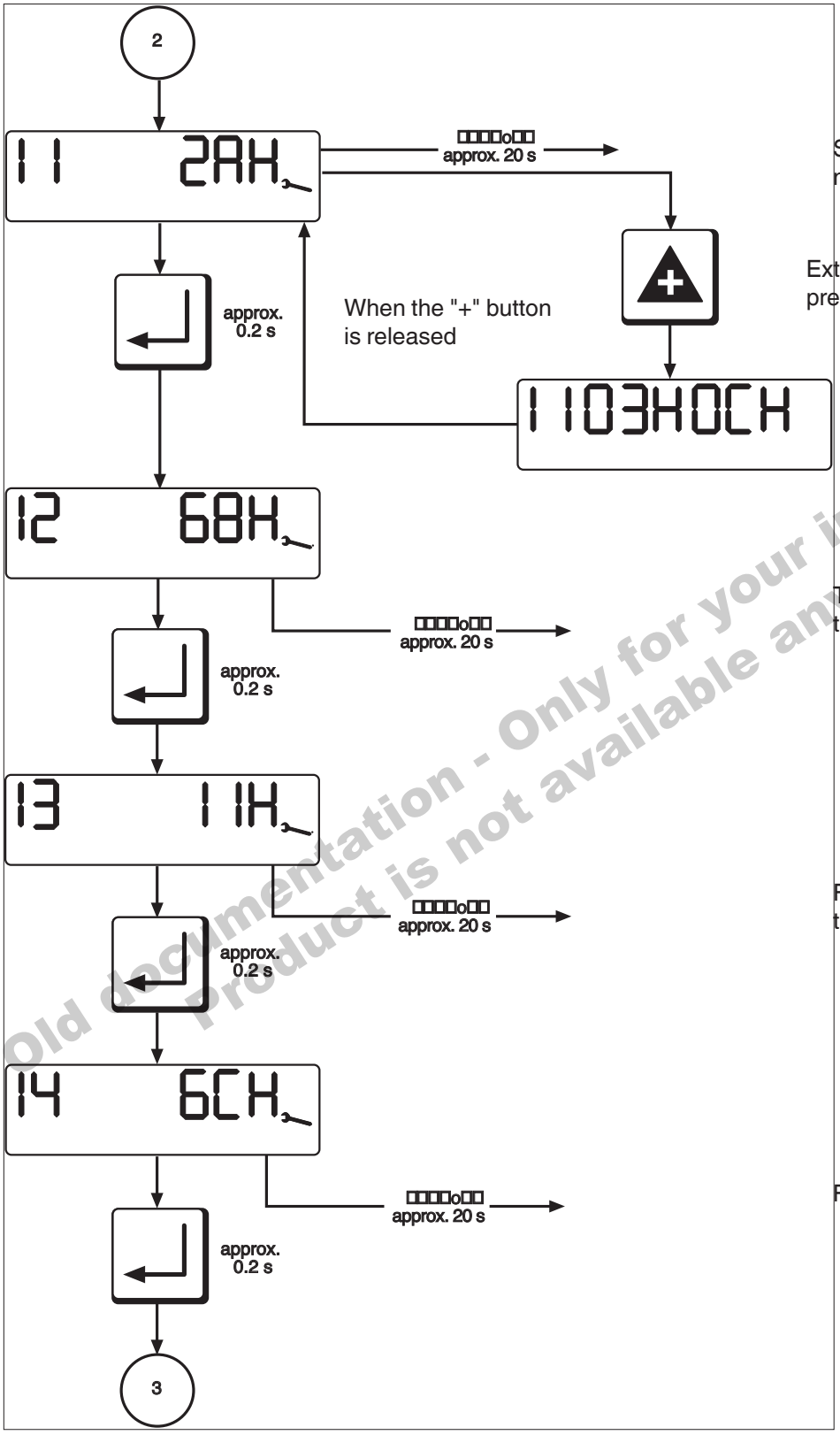

Second last error in hexadecimal nota-tion.

Extra error information by pressing the "+" button

Extra error information
Left: Extra error code
Right: No. of state in which error was detected.

Third last error in hexadecimal nota-tion.

Fourth last error in hexadecimal nota-tion.

Fifth last error in hexadecimal notation.

Old documentation - Only for your information! Product is not available anymore!

Printed in Germany / M-BOS • Edition 03.14 • Nr. 231 763

Display in service mode
Oil firing, three stage

DUNGS®
Combustion Controls

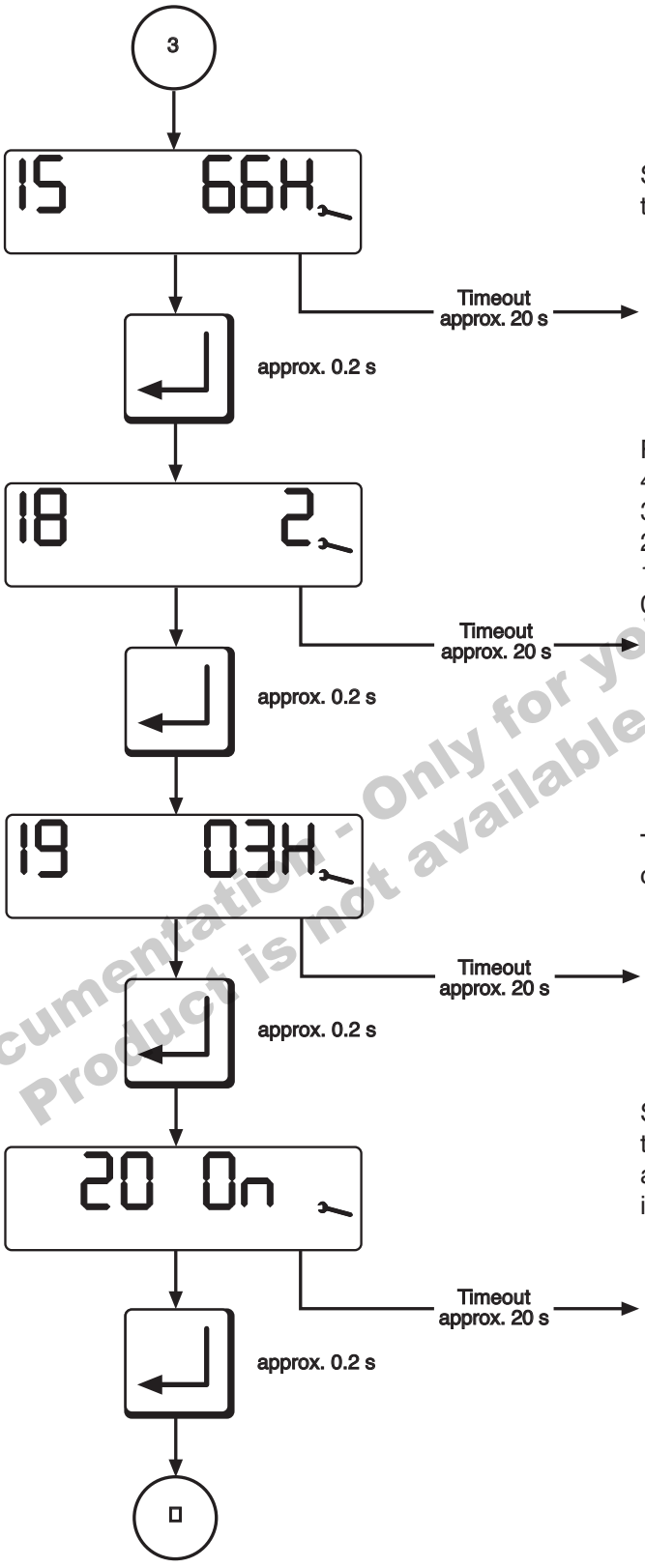

Sixth last error in hexadecimal notation.

Flame quality indication 0 - 4
4 corresponds to approx. µA > 13
3 corresponds to approx. µA < 13 / > 6
2 corresponds to approx. µA < 6 / > 2,5
1 corresponds to approx. µA < 2,5
0 corresponds no flame

The eBUS address of this automatic controller

Status indicator: monitor function active or inactive
active = ON
inactive = OFF

Old documentation - Only for your information!
Product is not available anymore!

Printed in Germany / M-BOS • Edition 03.14 • Nr. 231 763

Display in service mode
Oil firing, three stage

DUNGS®
Combustion Controls

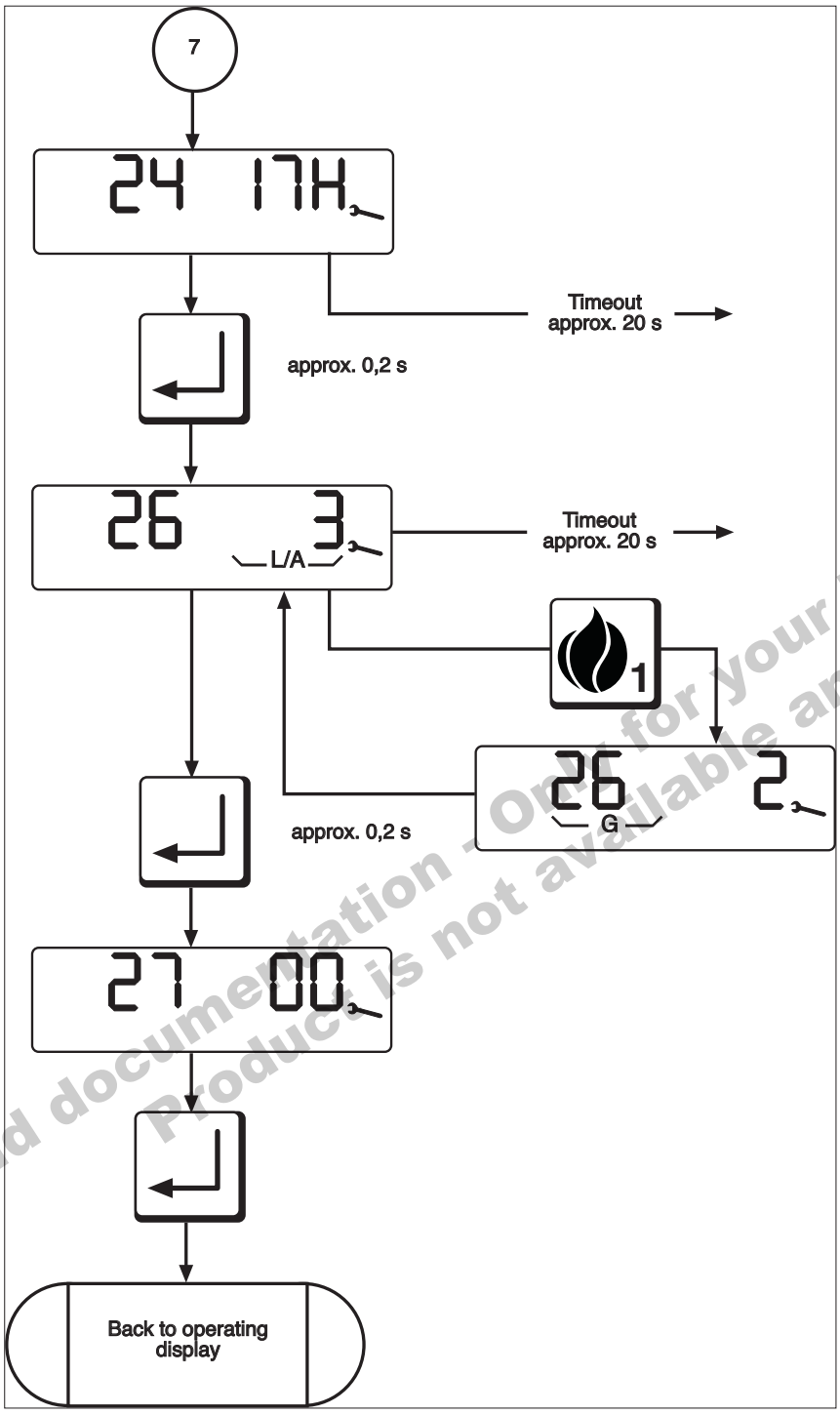

Display regulator address of automatic burner control
In the OFF position, no controller address is assigned

Display starting points - air and gas 0-3

Display of the regulator enable signal 0..59 s

Old documentation - Only for your information!
Product is not available anymore!

Printed in Germany / M-BOS • Edition 03.14 • Nr. 231 763

Display in parameterisation mode
Gas firing, electronic modulation
Gas firing, pneumatic modulation
Oil firing, three stage

DUNGS®
Combustion Controls

The parameterisation-mode display can be accessed only from the operating-mode display in standby status.

Parameterisation mode can be accessed only from the operating-mode display when the controller is on standby ("OFF"). Parameterisation mode is used to view important operating parameters and adjust the settings by means of the buttons on the touch-sensitive display.

Paramterisation mode defines access priority in such a way that all service-level parameters can be configured with MPA Vision.

This display mode is exited after a 20-second timeout or if the readout is scrolled past the last display image.

Old documentation - Only for your information!
Product is not available anymore!

Printed in Germany / M-BOS • Edition 03.14 • Nr. 231 763

Display in parameterisation mode
Gas firing, electronic modulation
Gas firing, pneumatic modulation
Oil firing, three stage

DUNGS®
Combustion Controls

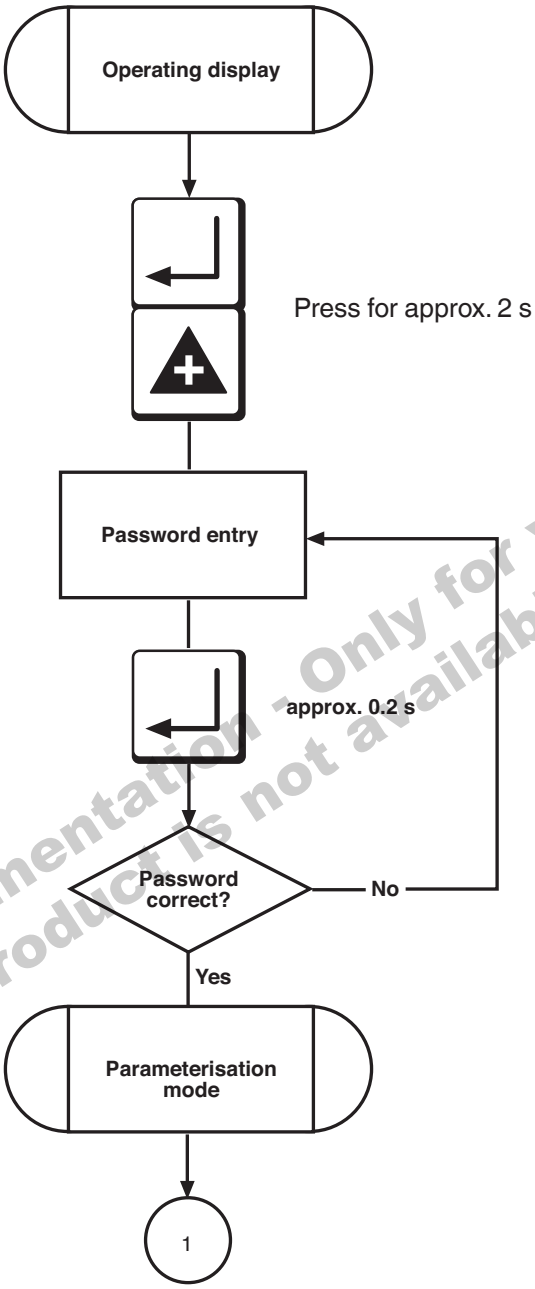

Old documentation - Only for your information! Product is not available anymore!

Printed in Germany / M-BOS • Edition 03.14 • Nr. 231 763

Display in parameterisation mode
Gas firing, electronic modulation
Gas firing, pneumatic modulation
Oil firing, three stage

DUNGS®
Combustion Controls

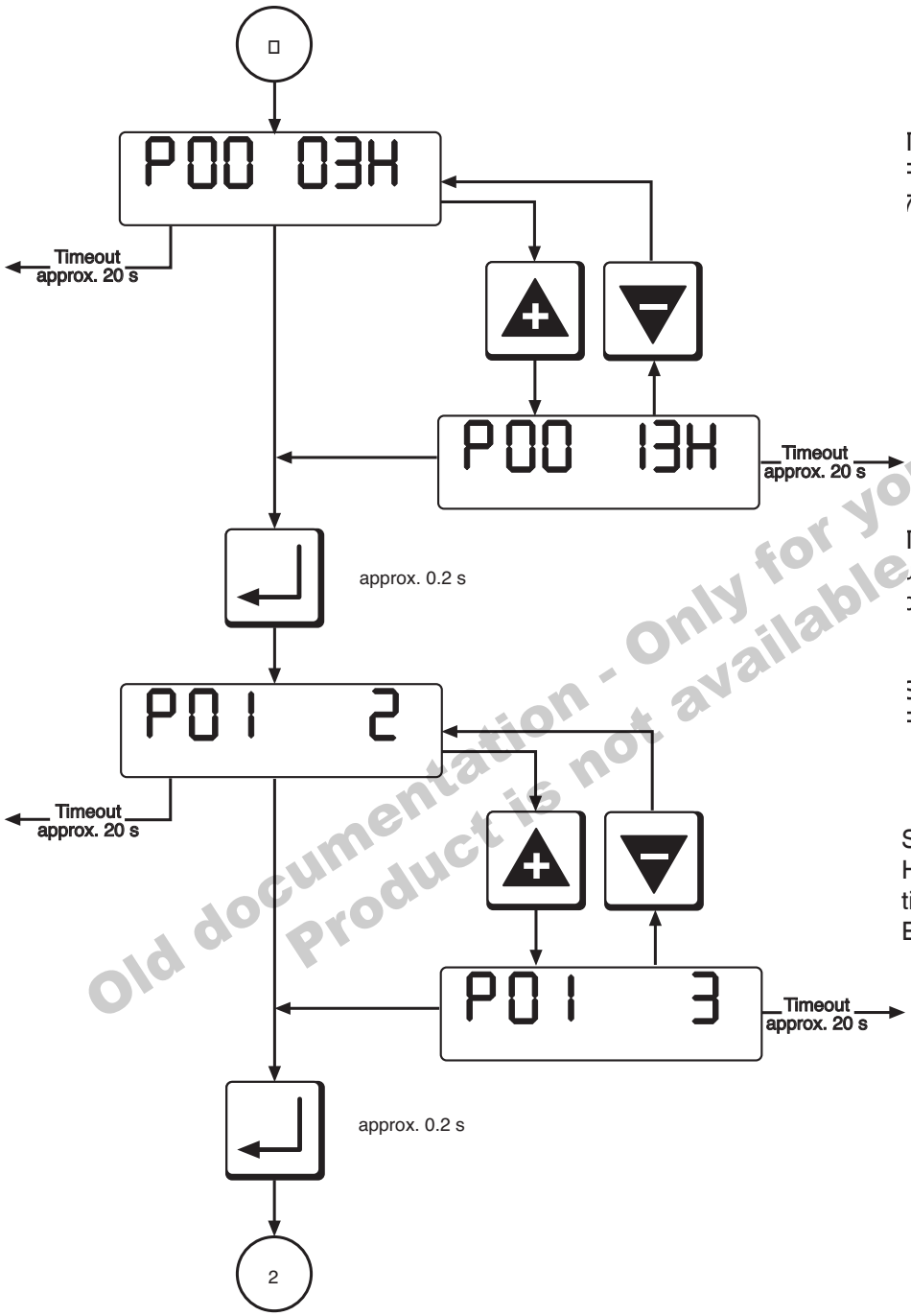

The eBUS communication address. Possible values are 03H, 13H, 33H, 73H, F3H, 1FH, 3FH, 7FH

The changed address is not stored until you advance the program or exit parameterisation mode via timeout.

Specify run-on time in seconds
Permissible range: 0 - 240 s

Strike key = 1 step
Hold down key = 25 steps slow counting followed by high-speed counting. Each individual step is counted.

Old documentation - Only for your information! Product is not available anymore!

Printed in Germany / M-BOS • Edition 03.14 • Nr. 231 763

Display in parameterisation mode
Gas firing, electronic modulation
Gas firing, pneumatic modulation
Oil firing, three stage

DUNGS®
Combustion Controls

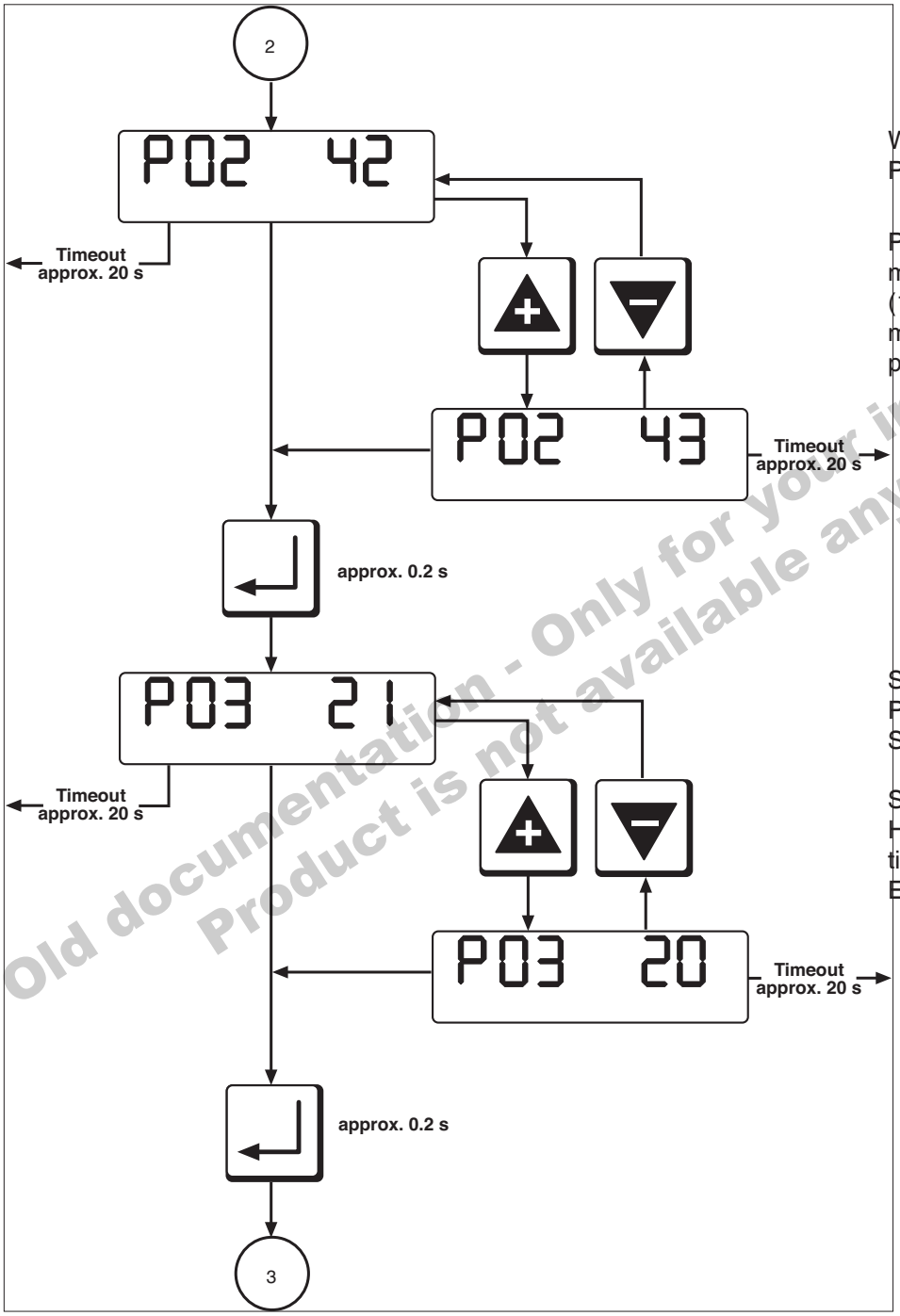

Wait in minutes
Permissible range 0 - 100 min.

Press button and release = one increment
(1 s). Press and hold down = increments slowly for 2.5 s, then more rapidly. Each increment is saved.

Specify pulse divider
Permissible range: 1 - 255
Specify in pulses/litres or pulse/m^3

Strike key = 1 step
Hold down key = 25 steps slow counting followed by high-speed counting. Each individual step is counted.

Old documentation - Only for your information! Product is not available anymore!

Printed in Germany / M-BOS • Edition 03.14 • Nr. 231 763

Display in parameterisation mode
Gas firing, electronic modulation
Gas firing, pneumatic modulation
Oil firing, three stage

DUNGS®
Combustion Controls

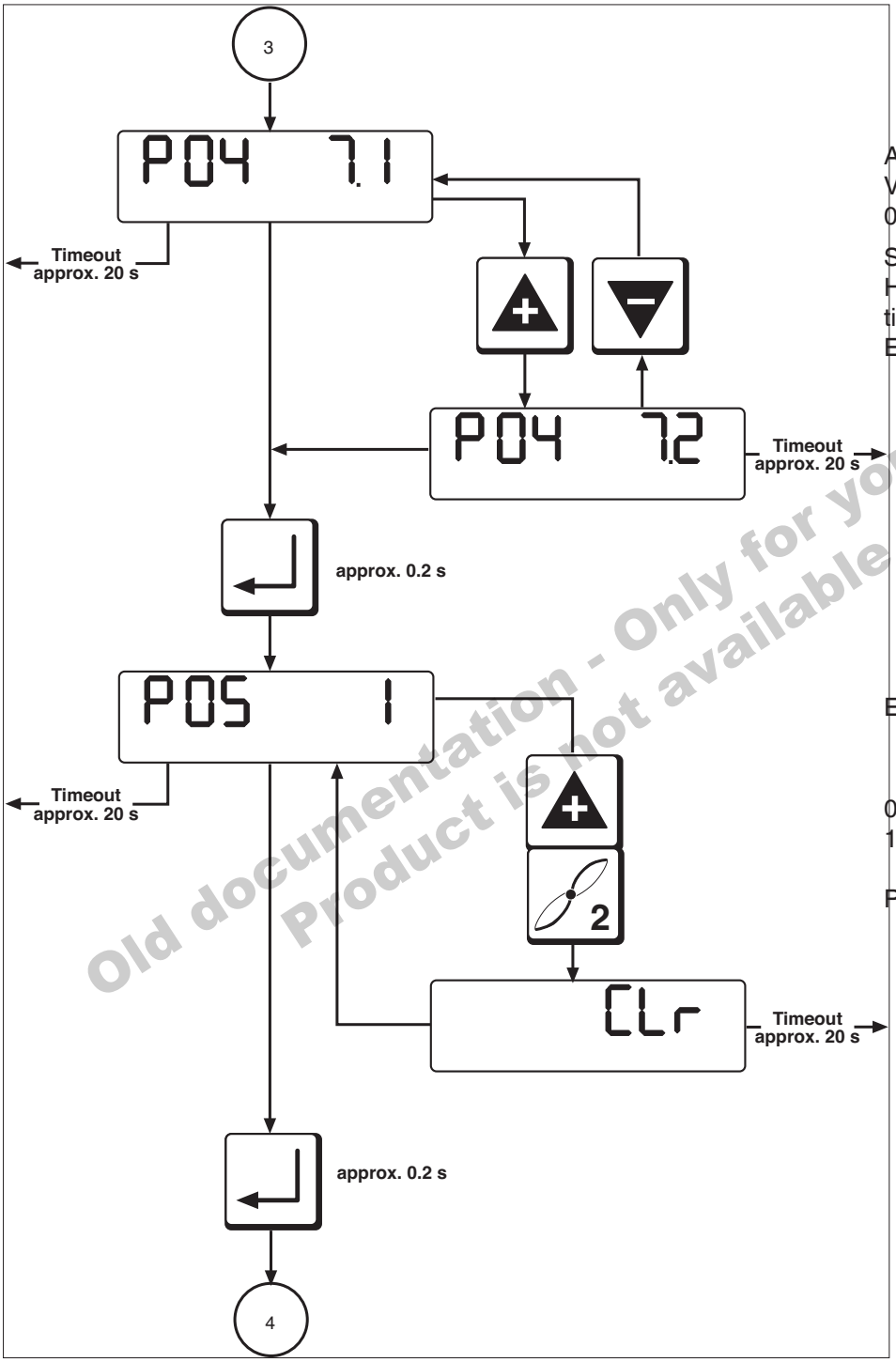

Air-flow control flap position in standby.
Variable in the range
0 - 25.5°.

Strike key = 1 step
Hold down key = 25 steps slow counting followed by high-speed counting.
Each individual step is counted.

Error memory can be cleared.

0 = Error memory is empty
1 = Error memory contains data

Press both buttons for approx. 2 s.

Old documentation - Only for your information! Product is not available anymore!

Printed in Germany / M-BOS • Edition 03.14 • Nr. 231 763

Display in parameterisation mode
Gas firing, electronic modulation
Gas firing, pneumatic modulation
Oil firing, three stage

DUNGS®
Combustion Controls

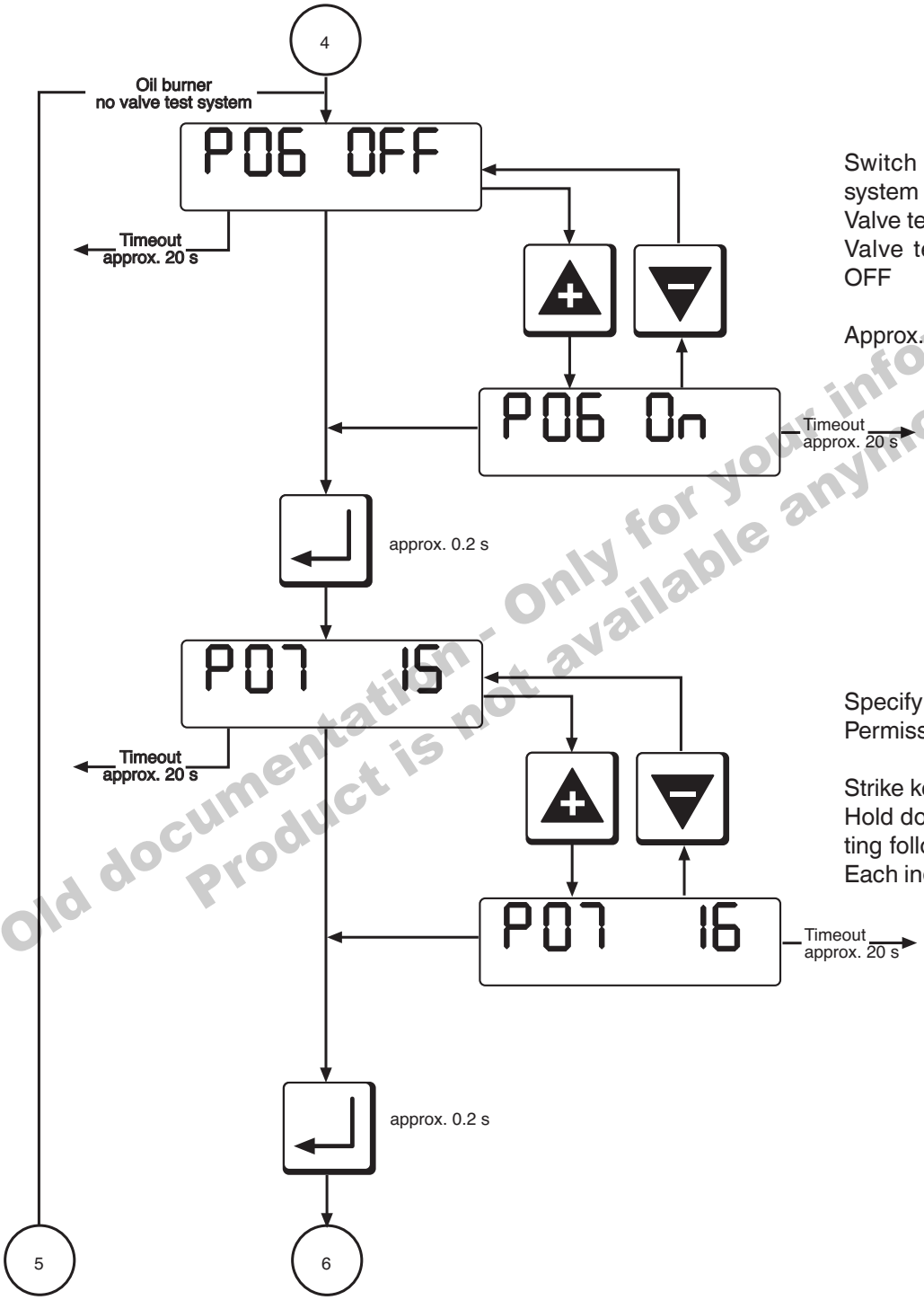

Switch position of the valve testing system
Valve testing system activated = ON
Valve testing system deactivated = OFF

Approx. 0.5 s: each change is saved.

Specify test time for valve Y2
Permissible range: 1 - 240

Strike key = 1 step
Hold down key = 25 steps slow counting followed by high-speed counting.
Each individual step is counted.

Old documentation - Only for your information!
Product is not available anymore!

Printed in Germany / M-BOS • Edition 03.14 • Nr. 231 763

Display in parameterization mode
Gas firing, electronic modulation
Gas firing, pneumatic modulation
Oil firing, three stage

DUNGS®
Combustion Controls

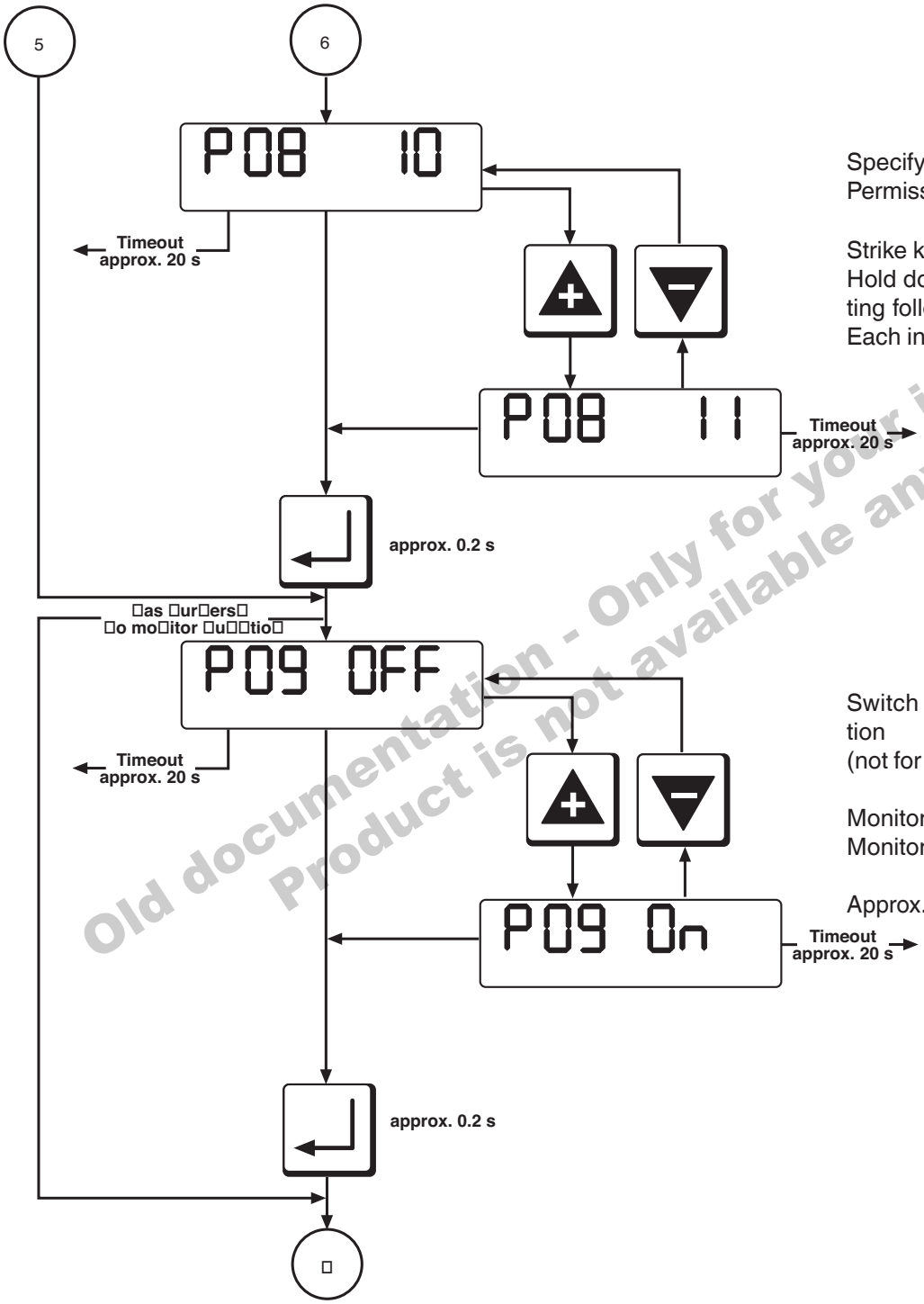

Specify test time for valve Y3
Permissible range: 1 - 240

Strike key = 1 step
Hold down key = 25 steps slow counting followed by high-speed counting.
Each individual step is counted.

Switch position of the monitor function
(not for gas burners)

Monitor function activated = ON
Monitor function deactivated = OFF

Approx. 0.5 s: each change is saved.

Old documentation - Only for your information! Product is not available anymore!

Printed in Germany / M-BOS • Edition 03.14 • Nr. 231 763

Display in parameterisation mode
Gas firing, electronic modulation
Gas firing, pneumatic modulation
Oil firing, three stage

DUNGS®
Combustion Controls

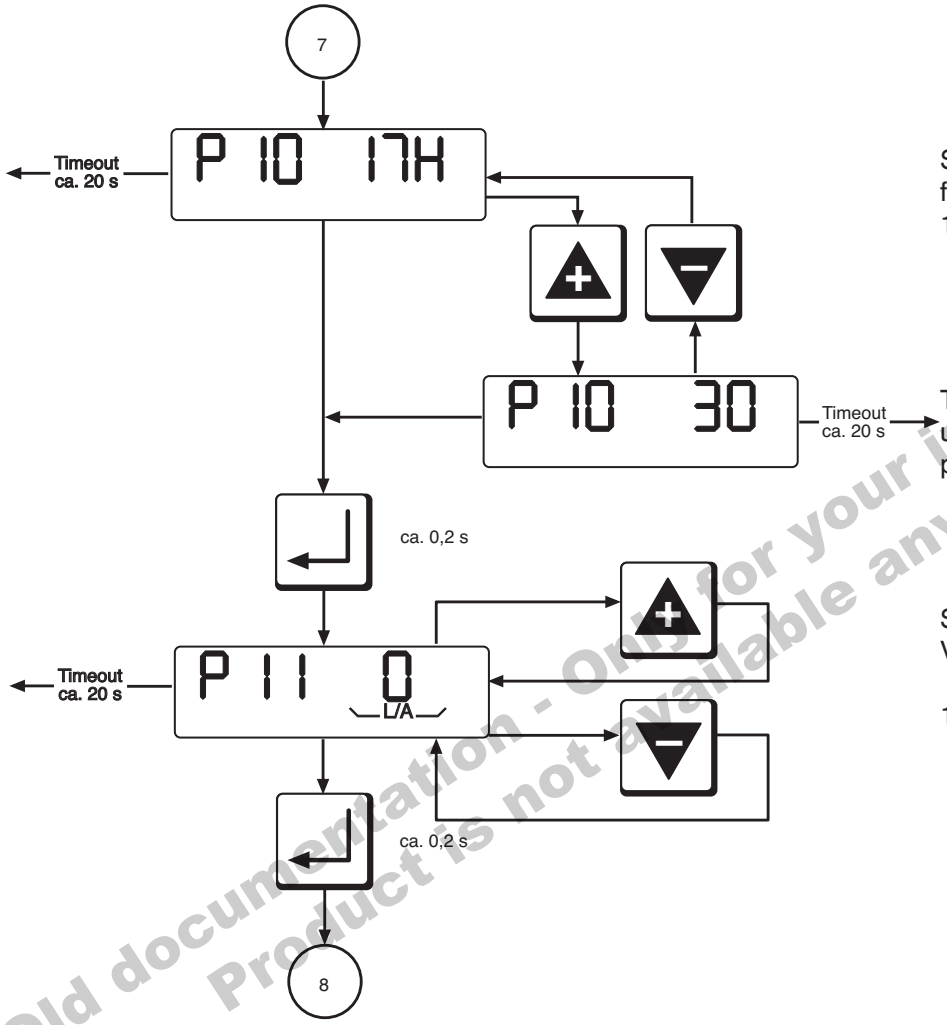

Specify control address of system. The following addresses are possible: 10H, 17H, 30H, 37H, 70H, 77H, F0H, F7H

The changed address is not stored until you advance the program or exit parameterisation mode via timeout.

Set modulation delay
Valid values 0-15
0 = no delay
15 = max. delay

Old documentation - Only for your information!
Product is not available anymore!

Printed in Germany / M-BOS • Edition 03.14 • Nr. 231 763

Display in parameterisation mode
Gas firing, electronic modulation
Gas firing, pneumatic modulation
Oil firing, three stage

DUNGS®
Combustion Controls

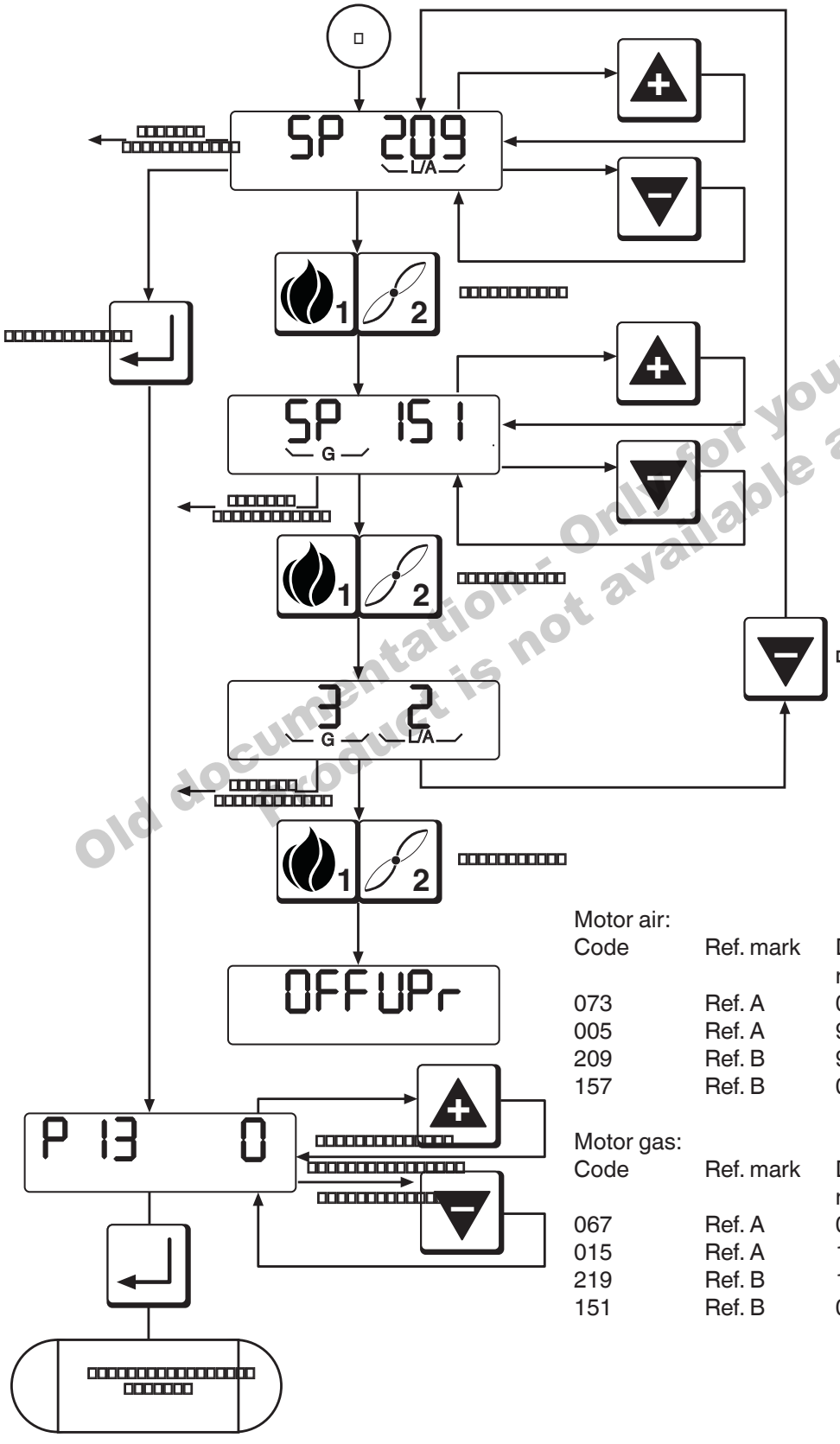

⚠ The current points are not displayed here. If this menu item is selected, the entire setting procedure must be repeated. To display the points, select "Service mode".

Set starting point of air motor. See table below for valid values.

Set starting point of gas motor. See table below for valid values.

If an invalid number is set for "starting point", the program goes back to the beginning of set starting points.

The selected start points are displayed (see numbers in parentheses in list of valid settings)

Old documentation - Only for your information! Product is not available anymore!

Motor air:

Code	Ref. mark	Damper angle at ref. mark	Start point
073	Ref. A	0°	(0)
005	Ref. A	90°	(1)
209	Ref. B	90°	(2)
157	Ref. B	0°	(3)

Motor gas:

Code	Ref. mark	Damper angle at ref. mark	Start point
067	Ref. A	0°	(0)
015	Ref. A	109°	(1)
219	Ref. B	109°	(2)
151	Ref. B	0°	(3)

Printed in Germany / M-BOS • Edition 03.14 • Nr. 231 763

Error indication
Gas firing, electronic modulation
Gas firing, pneumatic modulation
Oil firing, three stage

DUNGS®
Combustion Controls

Error mode

⚠ Error mode overwrites all other display modes.
Error mode is not active unless a error is detected.

Error indication

The following appears on the display:

- An "F" on the left
- The "Flame with strike-through" symbol
- The error code in hexadecimal notation; occupies the three places on the right.
- The error code flashes

Error code

The error codes are listed complete with their individual meanings in the Error Codes list below.

Extra error code

Press the "+" button to call up an extra error code which provides more detailed information on the error, along with details of the program state in which the error occurred. The extra error code does not flash on the display.

Reset

You must press the "Acknowledgment" or "Reset" button to reset.

Old documentation - Only for your information!
Product is not available anymore!

Printed in Germany / M-BOS • Edition 03.14 • Nr. 231 763

Error indication
Gas firing, electronic modulation
Gas firing, pneumatic modulation
Oil firing, three stage

DUNGS®
Combustion Controls

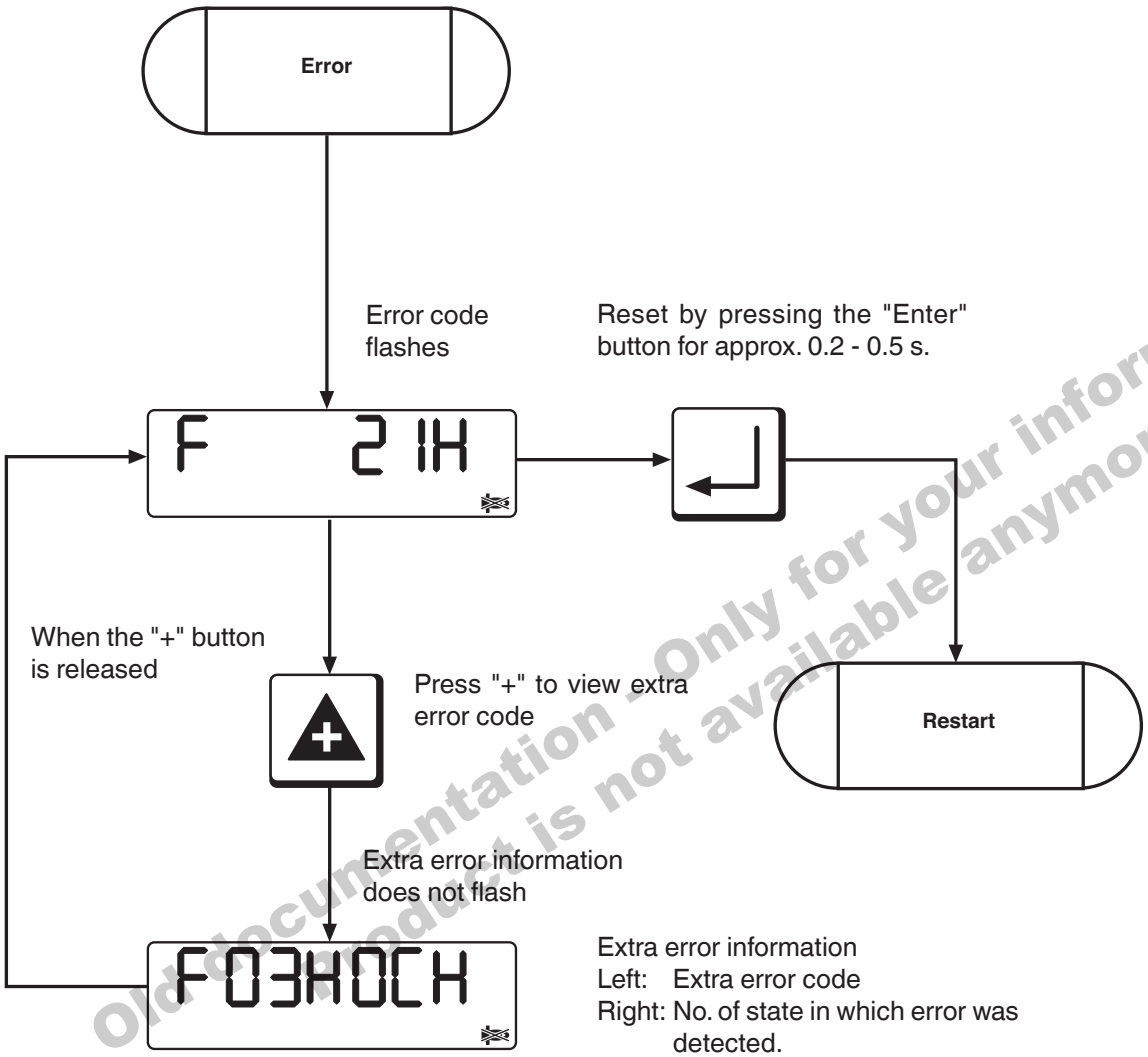

Old documentation - Only for your information! Product is not available anymore!

Printed in Germany / M-BOS • Edition 03.14 • Nr. 231 763

DUNGS®
Combustion Controls

Code	Meaning
04H	Internal device fault
05H	Internal device fault
06H	Internal device fault
07H	Internal device fault
09H	Internal device fault
10H	Internal device fault
11H	Internal device fault
12H	Internal device fault
13H	Internal device fault
14H	Internal device fault
15H	Internal device fault
20H	Air pressure switch is not in "off" position
21H	Air pressure switch failure
22H	Gas pressure switch failure
25H	No flame after safety period elapses
26H	Extraneous light
27H	Flame failure during operation
29H	Internal device fault
2AH	Internal device fault
2BH	Short circuit in photoresistor or internal fault
2CH	Internal device fault
30H	Internal device fault
31H	Internal device fault
32H	Internal device fault
33H	Internal device fault
34H	Internal device fault

Old documentation - Only for your information!
Product is not available anymore!

Printed in Germany / M-BOS • Edition 03.14 • Nr. 231 763

DUNGS®
Combustion Controls

Code	Meaning
42H	Safety circuit interrupted
43H	Y2 found to be leaky during leak test
44H	Y3 found to be leaky during leak test
45H	Internal device fault
46H	Internal device fault
47H	Internal device fault
48H	Internal device fault
4AH	Internal device fault
4BH	Internal device fault
4CH	Internal device fault
4DH	Internal device fault
4EH	Internal device fault
50H	Internal device fault
51H	Internal device fault
52H	Internal device fault
53H	Internal device fault
54H	Internal device fault
55H	Internal device fault
56H	Internal device fault
57H	Internal device fault
58H	Internal device fault
59H	Internal device fault
5AH	Internal device fault
5CH	Internal device fault
5DH	Internal device fault
5EH	Internal device fault

Old documentation - Only for your information!
Product is not available anymore!

Printed in Germany / M-BOS • Edition 03.14 • Nr. 231 763

Code	Meaning
63H	Internal device fault
64H	Internal device fault
65H	Internal device fault
67H	Internal device fault
68H	Air servomotor, incorrect acknowledgement (check cable and plug, servomotor and air damper mechanism)
69H	Gas servomotor, incorrect acknowledgement (check cable and plug, servomotor and gas damper mechanism)
6AH	Air servomotor position out of tolerance (check cable and plug, servomotor and air damper mechanism)
6BH	Gas servomotor position out of tolerance (check cable and plug, servomotor and gas damper mechanism)
6CH	Internal device fault
6DH	Internal device fault
6EH	Servomotors have been interchanged or connected incorrectly
6FH	Error in burner recognition / zero reference run (incorrect coding plug, check cable and plug)
70H	Internal device fault
71H	Internal device fault
73H	Internal device fault
74H	Internal device fault
75H	Internal device fault
76H	Internal device fault
77H	Internal device fault
78H	Internal device fault
79H	Internal device fault

Old documentation - Only for your information!
Product is not available anymore!

Printed in Germany / M-BOS • Edition 03.14 • Nr. 231 763



DUNGS®
Combustion Controls

Old documentation - Only for your information!
Product is not available anymore!

Printed in Germany / M-BOS • Edition 03.14 • Nr. 231 763