SIEMENS

7541



Burner Management System

LMV27.1...

Burner control with integrated air / fuel ratio control for forced draft burners. The LMV27.1… are designed for intermittent operation.

The LMV27.1... and this Data Sheet are intended for use by OEMs which integrate the burner management system in their products!

Use

The LMV27.1... burner management system is a microprocessor-based unit with matching system components for the control and supervision of forced draft burners of medium to high capacity.

CC1N7541en
22.06.2006

Building Technologies
HVAC Products

ПРОМЭЛЕКТРОНИКА / sales@prom-elec.com

Warning notes

For additional safety notes, refer to the Basic Documentation of the LMV27.1... system (P7541)!

To avoid injury to persons, damage to property or the environment, the following warning notes should be observed!

The LMV27.1... is a safety device! Do not open, interfere with or modify the unit. Siemens will not assume responsibility for any damage resulting from unauthorized interference!

- All activities (mounting, installation and service work, etc.) must be performed by qualified staff
- Before making any wiring changes in the connection area of the LMV27.1…, completely isolate the unit from the mains supply (all-polar disconnection)
- Ensure protection against electric shock hazard by providing adequate protection for the burner control's connection terminals
- Each time work has been carried out (mounting, installation, service work, etc.), check to ensure that wiring and parameters is in an orderly state
- Fall or shock can adversely affect the safety functions. Such units must not be put into operation, even if they do not exhibit any damage
- For display of the flame on the AZL2…, following general conditions apply:
  - Display is subject to various component tolerances so that deviations of ± 10 % can occur
  - Note that for physical reasons there is no linear relationship between flame display and detector signal values

Mounting notes

- Ensure that the relevant national safety regulations are complied with

Mounting

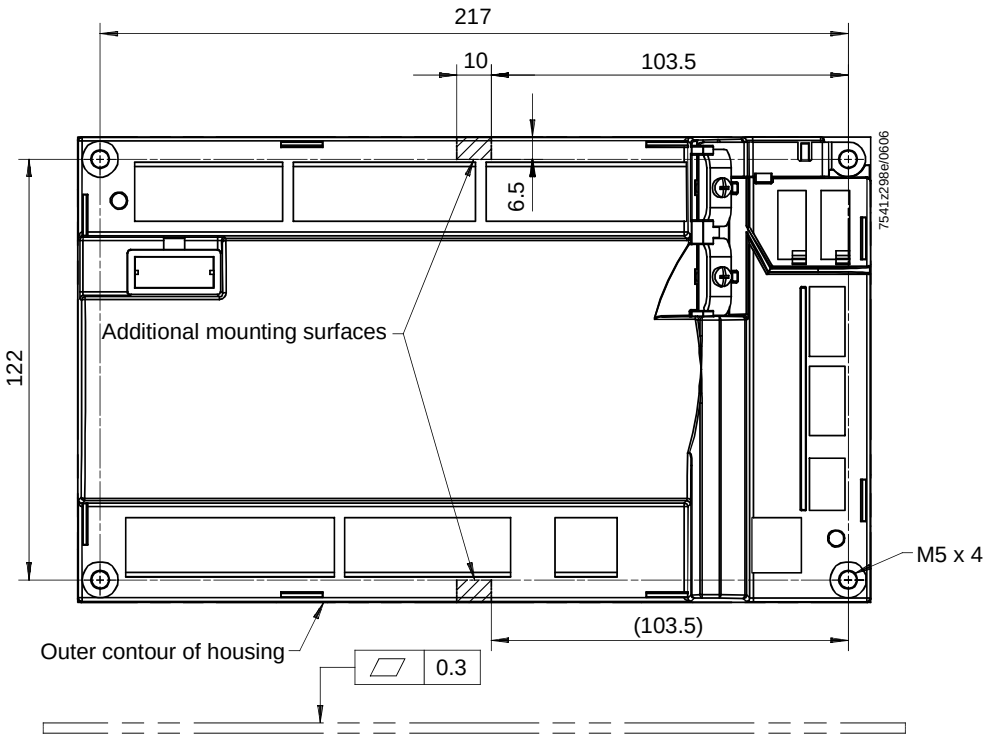

Installation notes

- Always run high-voltage ignition cables separately while observing the greatest possible distance to the unit and to other cables
- Do not mix up live and neutral conductors

Electrical connection of the flame detectors

It is important to achieve practically disturbance- and loss-free signal transmission:

- Never run the detector cable together with other cables
  – Line capacitance reduces the magnitude of the flame signal
  – Use a separate cable
- Observe the maximum permissible detector cable lengths
- The ionization probe is not protected against electric shock hazard. It is mains-powered and must be protected against accidental contact
- Locate the ignition electrode and the ionization probe such that the ignition spark cannot arc over to the ionization probe (risk of electrical overloads)

Standards and certificates

CE

Conformity to EEC directives

- Electromagnetic compatibility EMC (immunity)	89 / 336 / EEC
- Directive for gas appliances	90 / 396 / EEC
- Low-voltage directive	73 / 23 / EEC

ISO 9001: 2000
Cert. 00739

ISO 14001: 2004
Cert. 38233

- **Identification code to EN 298 chapter 4** **F T / M C L B B**

Service notes

- If fuses are blown, the unit must be returned to Siemens

Disposal notes



The unit contains electrical and electronic components and must not be disposed of together with domestic waste.
Local and currently valid legislation must be observed.

The LMV27.1... is a microprocessor-based system with matching system components for the control and supervision of forced draft burners of medium to high capacity.

The following system components are integrated in the LMV27.1… basic unit:

- Burner control with gas valve proving system
- Electronic air / fuel ratio control with a maximum of 2 actuators
- Modbus interface

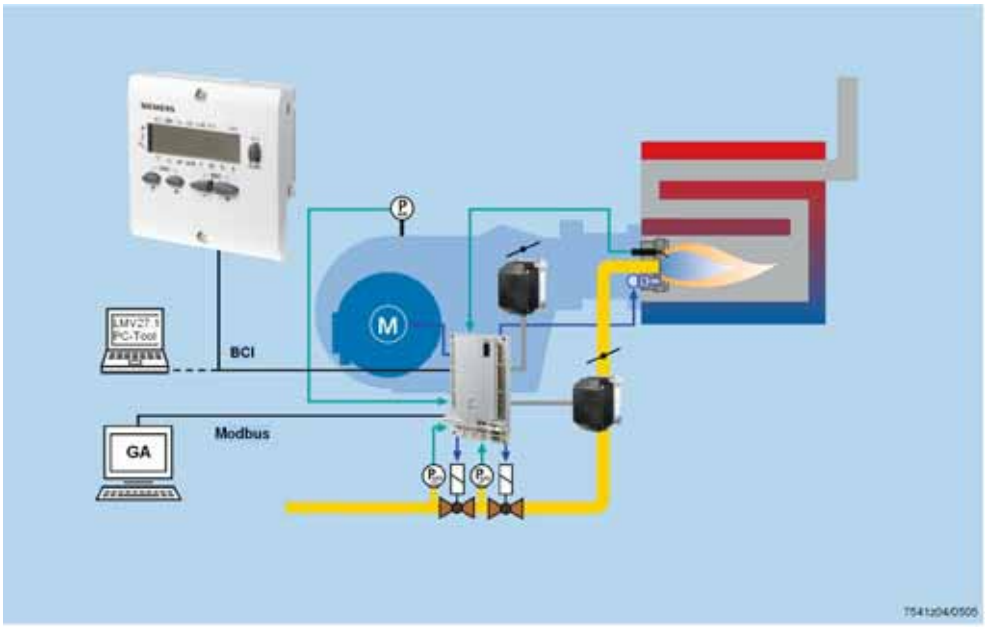

Example:
Modulating gas burner

The system components (display and operating unit, actuators) are connected directly to the LMV27.1…basic unit. All safety-related digital inputs and outputs of the system are monitored by a contact feedback network (CFN). For intermittent operation in connection with the LMV27.1..., an ionization probe or optical flame detector type QRB… or QRC… is used.
The burner management system is operated and parameterized with the help of the AZL2… display and operating unit or a PC tool. The AZL2... features an LCD and menu-driven operation, offering straightforward operation and targeted diagnostics. To simplify diagnostics, the display shows the operating states, the type of fault and the point in time the fault occurred. The different parameter setting levels for the burner / boiler manufacturer and the heating engineer are protected by passwords. Basic settings that the plant operator can make on site do not demand a password. There is also a communication interface COM from which higher level systems such as building automation (GA). Using the BCI and OCI410… interfaces, a PC with ACS410 software can be connected. Among other features, the software affords convenient readout of settings and operating states, parameterization of the LMV27.1..., and trend logging.
The burner / boiler manufacturer can choose from a number of different fuel trains and has a wide variety of parameter setting choices (program times, configuration of inputs and outputs, etc.) to ensure optimum adaptation to the relevant application.
The SQM3... and SQN1… actuators are driven by stepper motors and offer high-resolution positioning. The characteristics and settings of the actuators are defined by the LMV27.1... basic unit.

Type summary

Microprocessor-based burner control for single-fuel burners of any capacity, electronic air / fuel ratio control, up to 2 actuators, integrated gas valve proving system.

Type reference	Mains voltage	Parameter set	Type of flame detector	TSA	
				Gas	Oil
LMV27.100A2	AC 230 V	Europe	QRA2… / QRA4… (USA) / QRA10… / QRB… / QRC… / ION	3 s	5 s

Technical data

LMV27.1… basic unit	Mains voltage	AC 230 V -15 % / +10 %
	Mains frequency	50 / 60 Hz ±6 %
	Power consumption	< 30 W (typically)
	Safety class	I, with parts according to II and III to DIN EN 60 730-1
	Degree of protection	IP00 Note: The burner or boiler manufacturer must ensure degree of protection IP40 to DIN EN 529 for burner controls by adequate installation of the LMV2…
Terminal loading «Inputs»	• Perm. mains primary fuse (externally)	max. 16 AT
	• Unit fuse F1 (internally)	6.3 AT (DIN EN 60 127 2 / 5)
	• Mains supply: Input current depending on the operating state of the unit	
	Undervoltage	
	• Safety shutdown from operating position at mains voltage	approx. AC 186 V
	• Restart on rise in mains voltage	approx. AC 195 V
	Status inputs: Status inputs (with the exception of the safety loop) of the contact feedback network (CFN) are used for system supervision and require mains-related input voltage	
	• Input safety loop	refer to «Terminal loading outputs»
	• Input currents and input voltages	
	- UeMax	UN +10 %
	- UeMin	UN -15 %
	- IeMax	1.5 mA peak
	- IeMin	0.7 mA peak
	• Contact material recommendation for external signal sources (LP, DWmin, DWmax, etc.)	gold-plated silver contacts
	• Transition / settling behavior / bounce	
	- Perm. bounce time of contacts when switching on / off	max. 50 ms (after the bounce time, the contact must stay closed or open)
	• UN	AC 230 V
	• Voltage detection	
	- On	AC 180...253 V
	- Off	< AC 80 V

Terminal loading «Outputs»

Total contact loading:	
• Nominal voltage	AC 230 V, 50 / 60 Hz
• Unit input current (safety loop) from: - Fan motor contactor - Ignition transformer - Valves - Oil pump / magnetic clutch	max. 5 A

Individual contact loading:	
Fan motor contactor	
• Nominal voltage	AC 230 V, 50 / 60 Hz
• Nominal current	2 A
• Power factor	cosφ > 0.4
Alarm output	
• Nominal voltage	AC 230 V, 50 / 60 Hz
• Nominal current	1 A
• factor	cosφ > 0.4
Ignition transformer	
• Nominal voltage	AC 230 V, 50 / 60 Hz
• Nominal current	2 A
• Power factor	cosφ > 0.2
Fuel valves	
• Nominal voltage	AC 230 V, 50 / 60 Hz
• Nominal current	2 A
• Power factor	cosφ > 0.4
Operation display	
• Nominal voltage	AC 230 V, 50 / 60 Hz
• Nominal current	0.5 A
• Power factor	cosφ > 0.4

Cable lengths

• Mains line AC 230 V	max. 100 m (100 pF / m)
• Display, BCI	max. 3 m (100 pF / m) for used outside the burner cover or the control panel <u>in assessment:</u> max. 10 m (100 pF / m) for used outside the burner cover
• Load controller LR	max. 20 m (100 pF / m)
• External lockout reset button	max. 20 m (100 pF / m)
• Other lines	max. 3 m (100 pF / m)

Specification as per EN 60730-1	
Type of shutdown or interruption of each circuit	
Shutdown with microswitch	1-pole
Mode of operation	type 2 B

Cross-sectional areas

The cross-sectional areas of the mains power lines (L, N, and PE) and, if required, the safety loop (safety limit thermostat, water shortage, etc.) must be sized for nominal currents according to the selected external primary fuse.
The cross-sectional areas of the other cables must be sized in accordance with the internal unit fuse (max. 6.3 AT).

Min. cross-sectional area	0.75 mm² (single- or multi-core to VDE 0100)

Cable insulation must meet the relevant temperature requirements and environmental conditions.

Fuses used in the LMV27.1... basic unit	
- F1	6.3 AT DIN EN 60 127 2 / 5

Connecting cable display → BCI

Standard signal cable	standard length 0.3 m and 2 m
Location	under the burner cover or in the control panel
Delivery Specification	H 72385 0000 0
Supplier	Hütter http://www.huetter.co.at/telefonkabel.htm

Environmental conditions

Storage	DIN EN 60 721-3-1
Climatic conditions	class 1K3
Mechanical conditions	class 1M2
Temperature range	-20...+60 °C
Humidity	< 95 % r.h.
Transport	DIN EN 60 721-3-2
Climatic conditions	class 2K2
Mechanical conditions	class 2M2
Temperature range	-30...+60 °C
Humidity	< 95 % r.h.
Operation	DIN EN 60 721-3-3
Climatic conditions	class 3K3
Mechanical conditions	class 3M3
Temperature range	-20...+60 °C
Humidity	< 95 % r.h.

⚠ **Condensation, formation of ice and ingress of water are not permitted!**

Flame detectors

Ionization probe

No-load voltage at ION terminal (X10–05 terminal 2)	approx. U_{Netz}



Caution!
Protect the ionization probe against electric shock hazard!

Short-circuit current	max. AC 1 mA
Required detector current	min. DC 4 µA, flame display approx. 30 %
Possible detector current	max. DC 16…40 µA, flame display approx. 100 %
Max. perm. length of detector cable (laid separately)	3 m (wire – ground 100 pF / m)

Note:
With increasing detector cable capacitance (cable length), the voltage at the ionization probe, and thus the current, drops. Long cable lengths plus very highly resistive flames might necessitate low-capacitance detector cables (e.g. ignition cable).
In spite of technical measures taken in the circuitry aimed at compensating potential adverse effects of the ignition spark on the ionization current, it must be made certain that the minimum detector current required will already be reached during the ignition phase.
If this is not the case, the connections on the primary side of the ignition transformer must be changed and / or the electrodes relocated.

Photoresistive detectors QRB…

No-load voltage at QRB... terminal (X10–05 terminal 3)	approx. DC 5 V
Max. perm. length of QRB... detector cable (laid separately)	3 m (wire – wire 100 pF / m)

Note:
A detector resistance of RF < 500 Ω is identified as a short-circuit and leads to safety shutdown in operation as if the flame had been lost.

For this reason, before considering the use of a highly sensitive photoresistive detector (QRB1B... or QRB3S), it should be checked whether this type of flame detector is really required!
Increased line capacitance between QRB... connection and mains live wire *L* has an adverse effect on sensitivity and increases the risk of damaged flame detectors due to overvoltage.
Always run detector cables separately!

Threshold value flame supervision QRB… with LMV2…

Start prevention (extraneous light) with $\mathbf{R}_{QRB}$	< 400 kΩ intensity > 10 %
Operation with $\mathbf{R}_{QRB}$	< 230 kΩ intensity > 16 %
Short-circuit detection with $\mathbf{R}_{QRB}$	< 0.5 kΩ

Flame detectors
QRA2… / QRA4…
(U.S.) / QRA10…



Caution!
If flame detectors type QRA2… / QRA4… are used for flame supervision with the LMV2…, it must be ensured that the detector is permanently connected to power (conforming to EN 230), thus enabling the system to detect flame detector failures during startup.

Blue-flame detectors
QRC…

Aquivalent threshold value:	
Operation	approx. 20 µA (measured with DC 15 V / 4.5 kΩ series resistor)

For system-specific reasons, the display of flame intensity is limited to a maximum of approximately 55 %.

Block diagram inputs / outputs

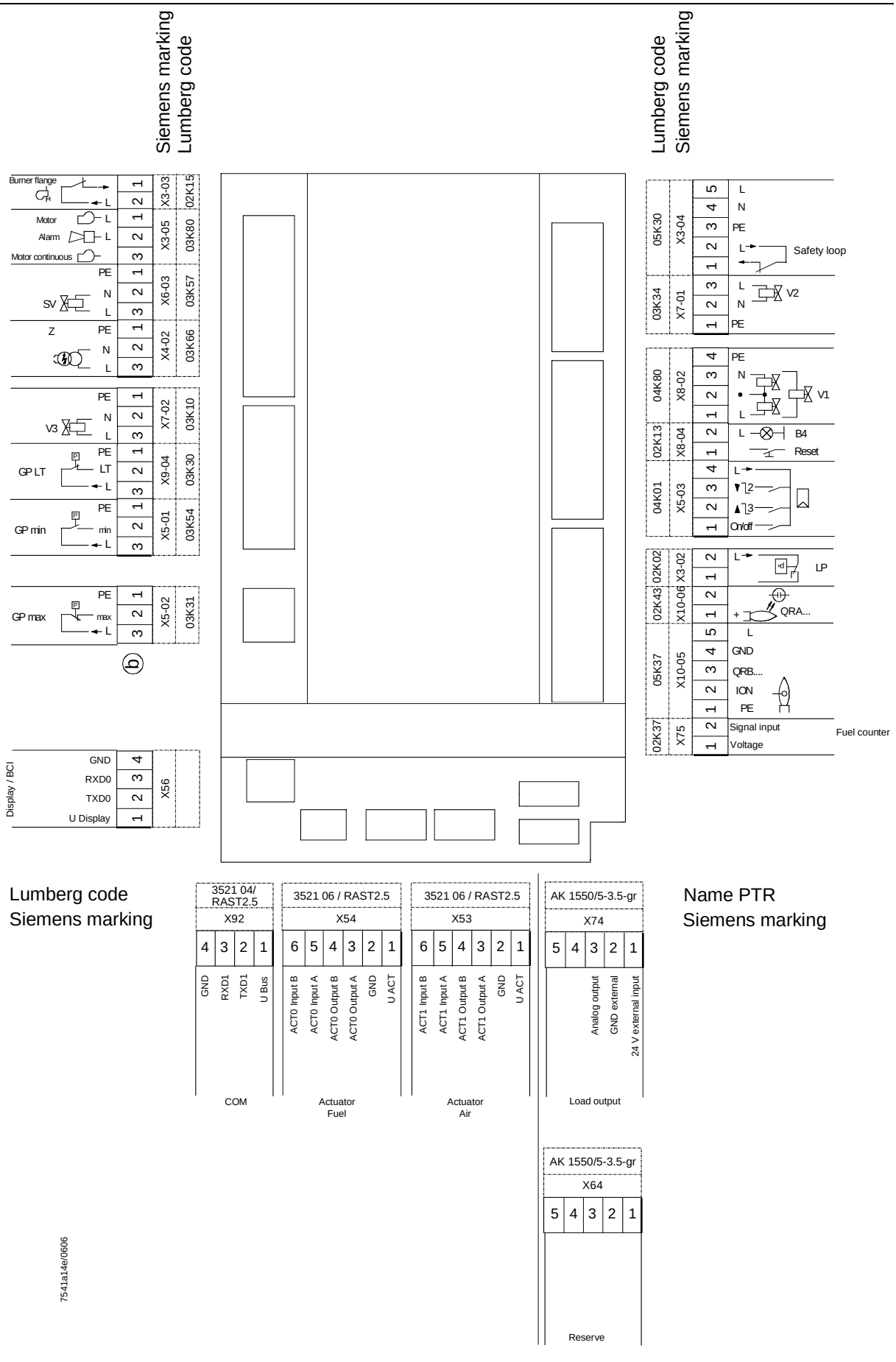

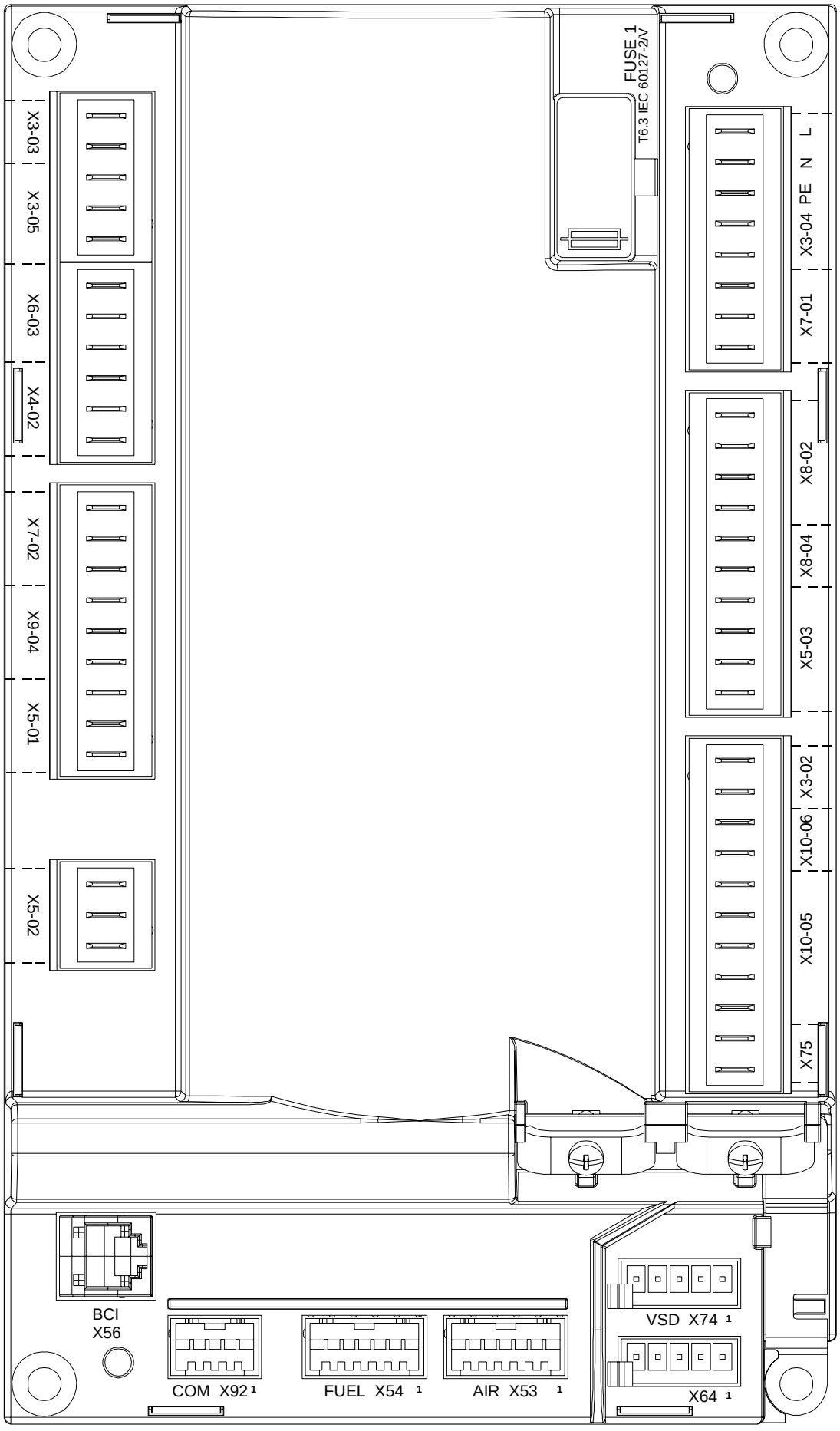
FUSE 1
T6.3 IEC 60127-2/V
X3-03
X3-05
X6-03
X4-02
X7-02
X9-04
X5-01
X5-02
L
N
PE
X3-04
X7-01
X8-02
X8-04
X5-03
X3-02
X10-06
X10-05
X75
BCI
X56
COM X92 1
FUEL X54 1
AIR X53 1
VSD X74 1
X64 1
7541z297/0506

Connection diagram

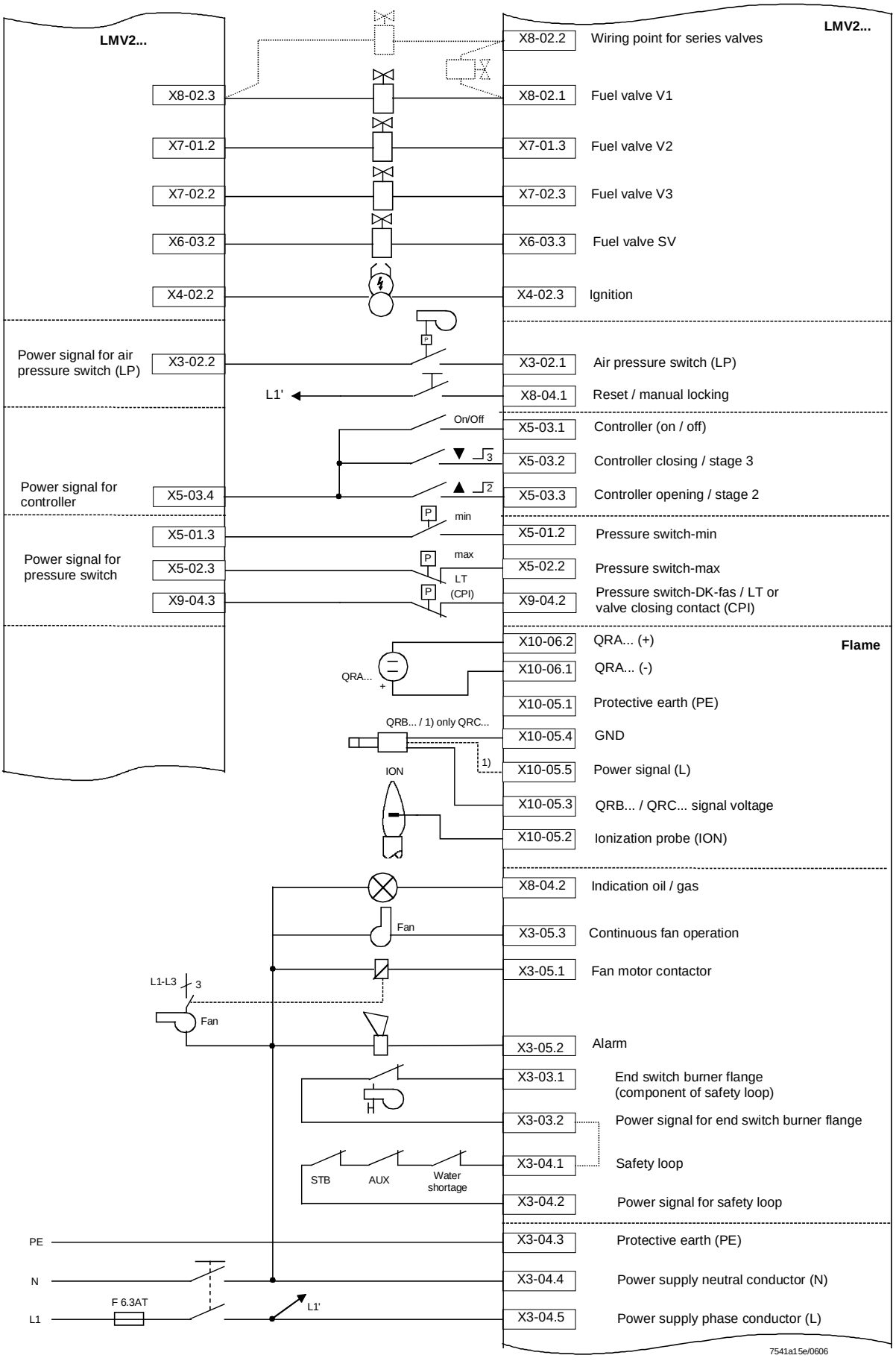

Connection diagram (cont´d)

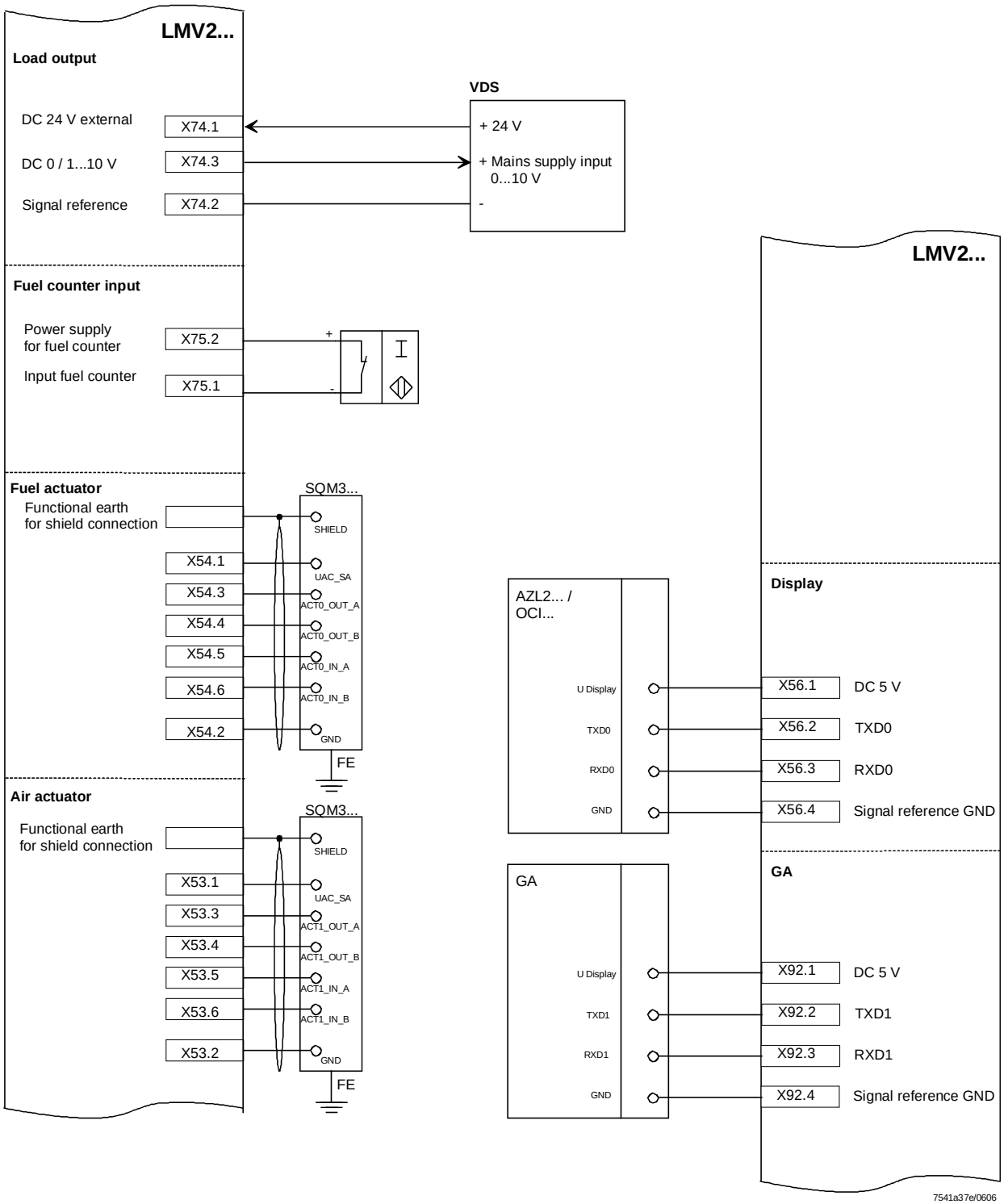

Fuel train applications (examples)

Direct gas ignition

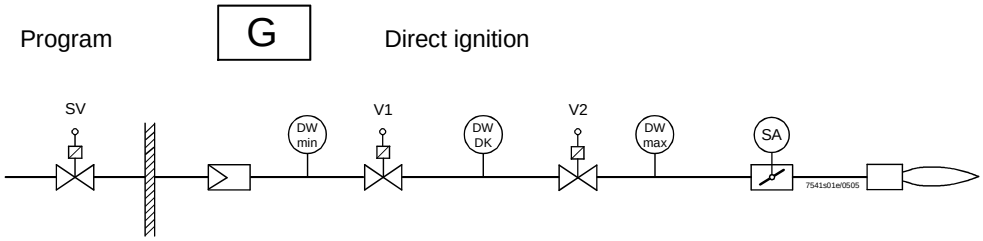

Gas pilot ignition 1

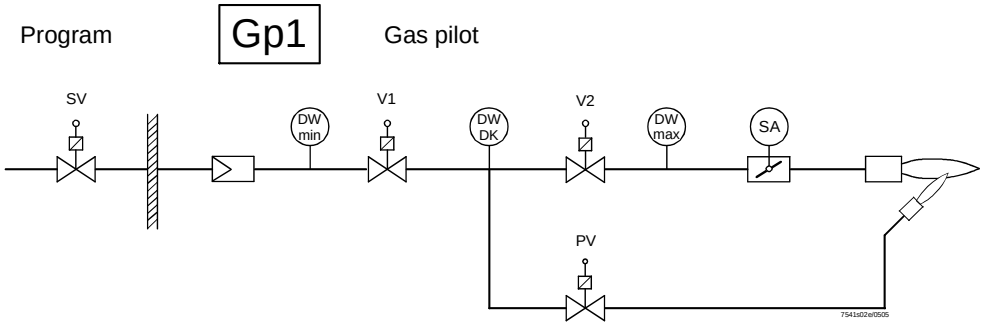

Gas pilot ignition 2

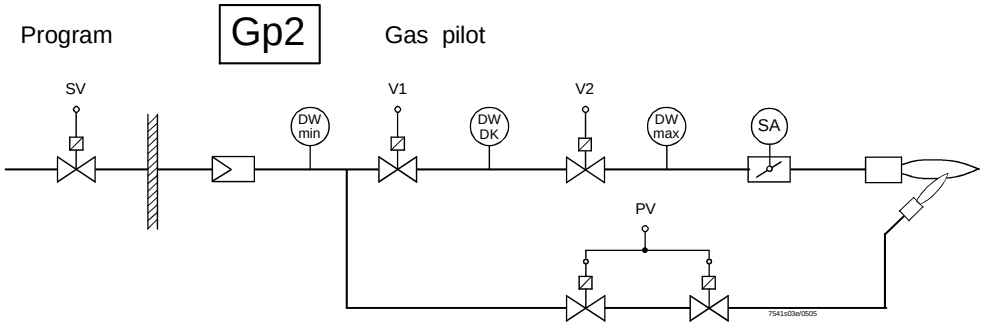

Fuel valve control program

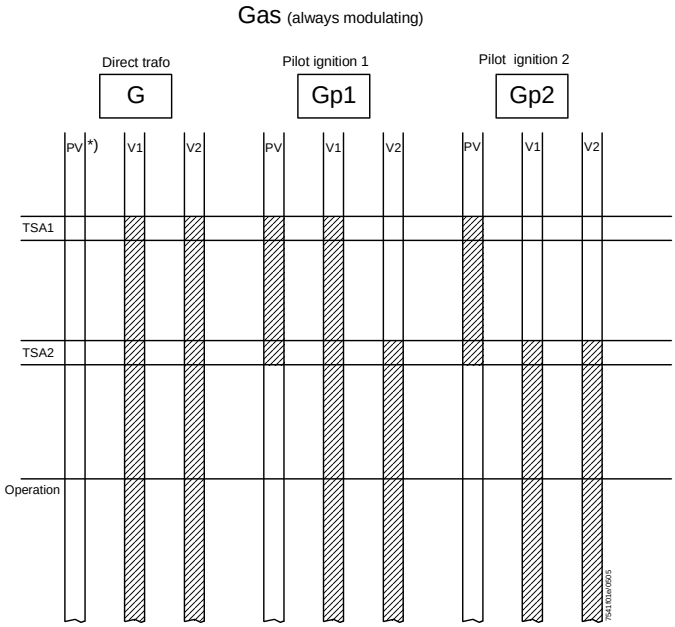

Legend for fuel trains:

*)	Not used
1)	Series connection of two 115 V-valves (each requiring approx. 25 VA control power)
2)	Preheating device
V	Fuel valve
DK	Gas valve proving
DW	Pressure switch
HE	Heating element
HO	Heavy fuel oil
LO	Light fuel oil
SA	Actuator
No	**N**ormally **O**pen
SV	Shutoff valve (outside the building)
PV	Pilot valve

Direct ignition with
light fuel oil, multistage

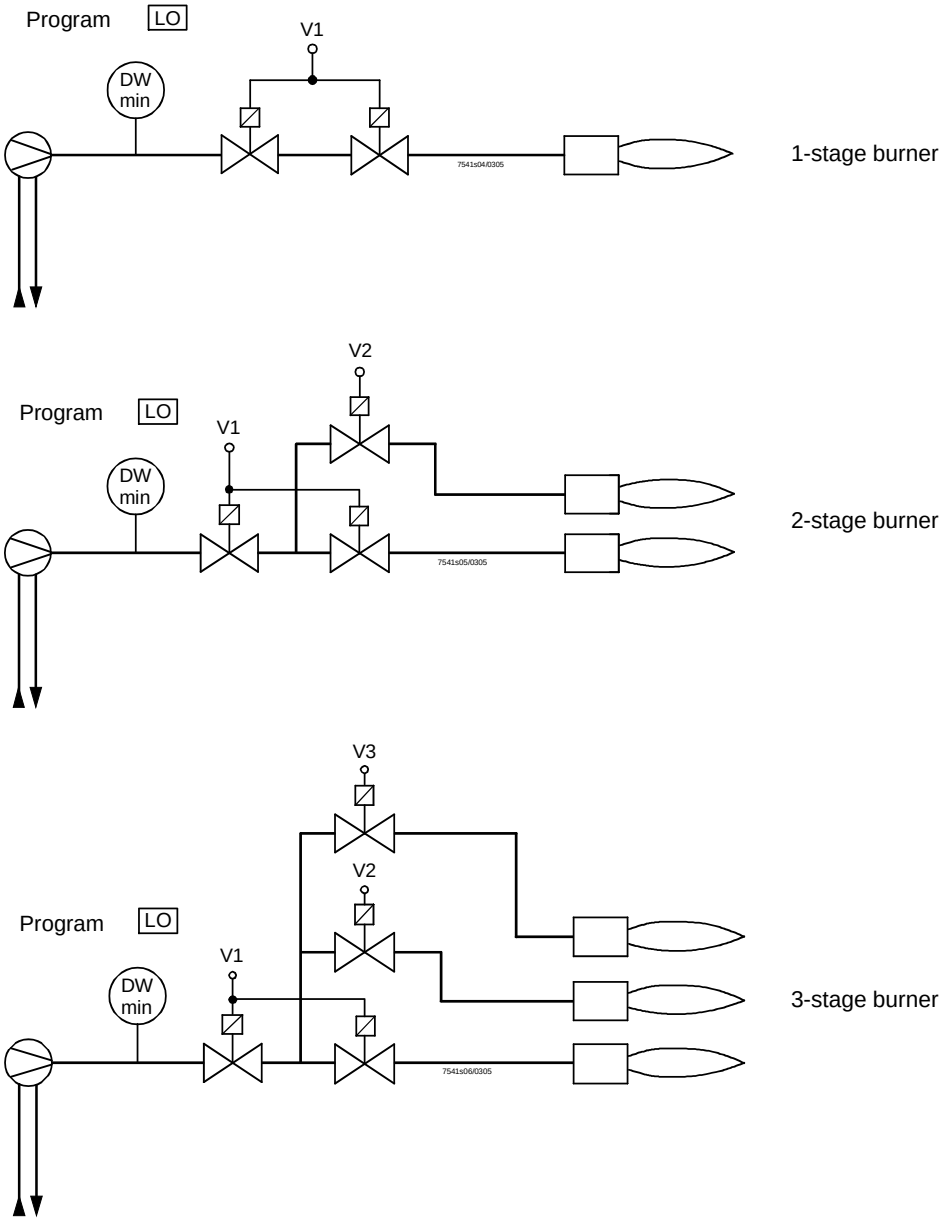

Direct ignition with light fuel oil, modulating

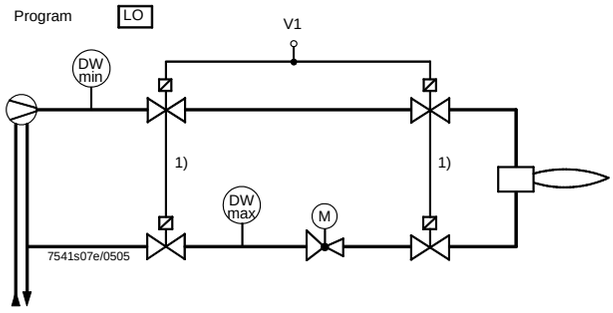

Modulating burner (without shutdown facility for adjustable head)

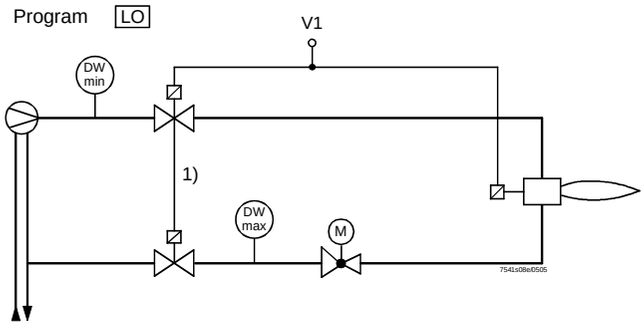

Modulating burner (with shutdown facility for adjustable head)

Fuel valve control program

Light fuel oil (Trafo direct ignition)

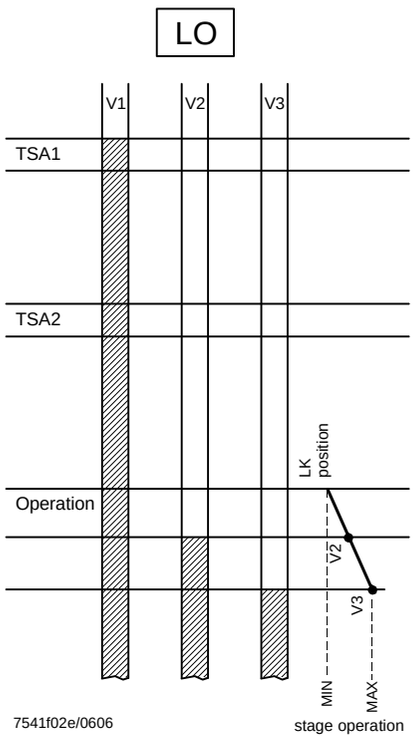

ПРОМЭЛЕКТРОНИКА / sales@prom-elec.com

Dimensions

Dimensions in mm

LMV27.1...

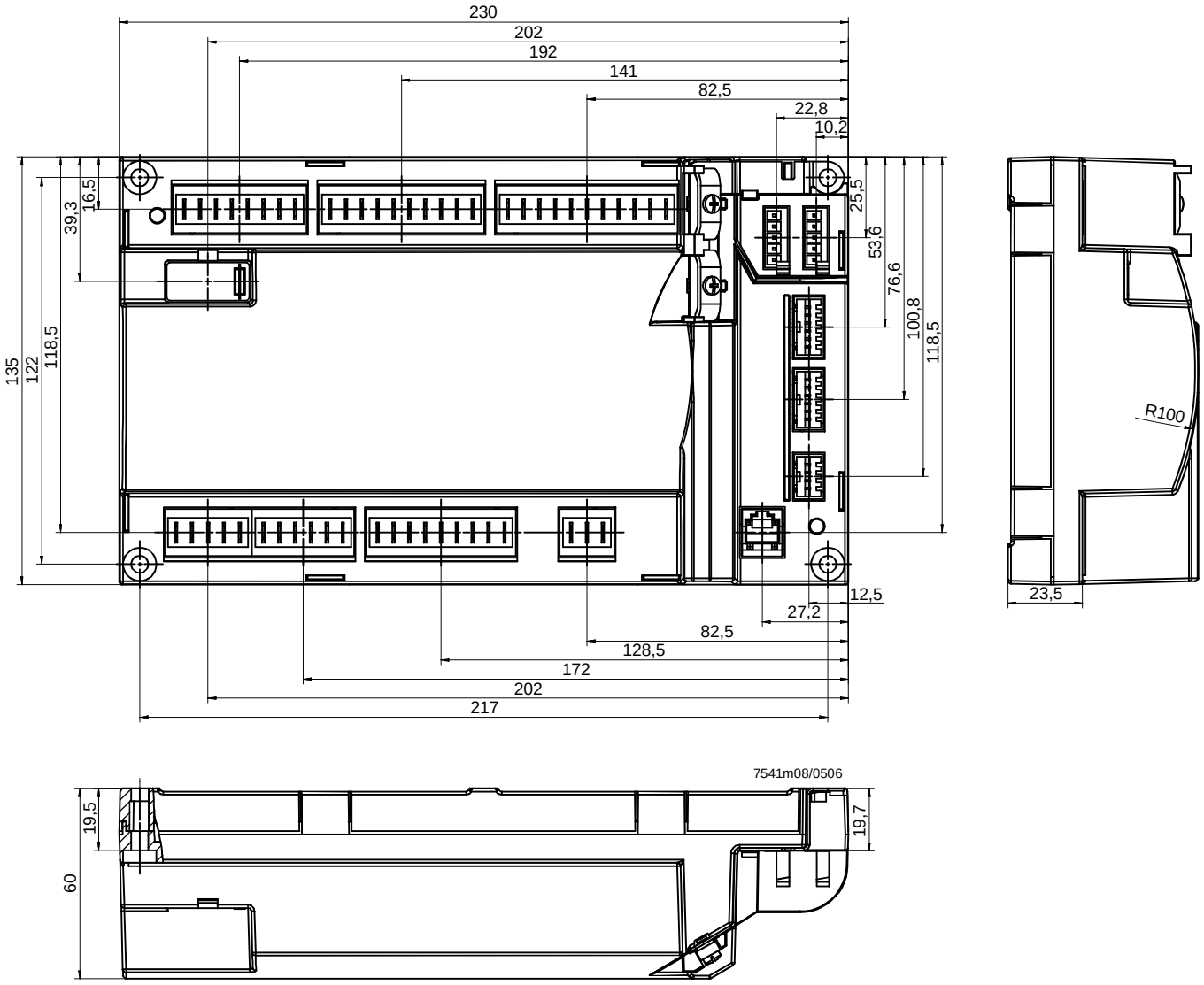

©2006 Siemens Building Technologies HVAC Products GmbH
Subject to change!