83055402 – 1/2002

Installation and operating instructions Weishaupt gas burner WG10.../1-C, version ZM-LN (Low NO_x)

For gas types Natural Gas E, LL and Liquid Petroleum Gas B/P

Info for engineers

– weishaupt –

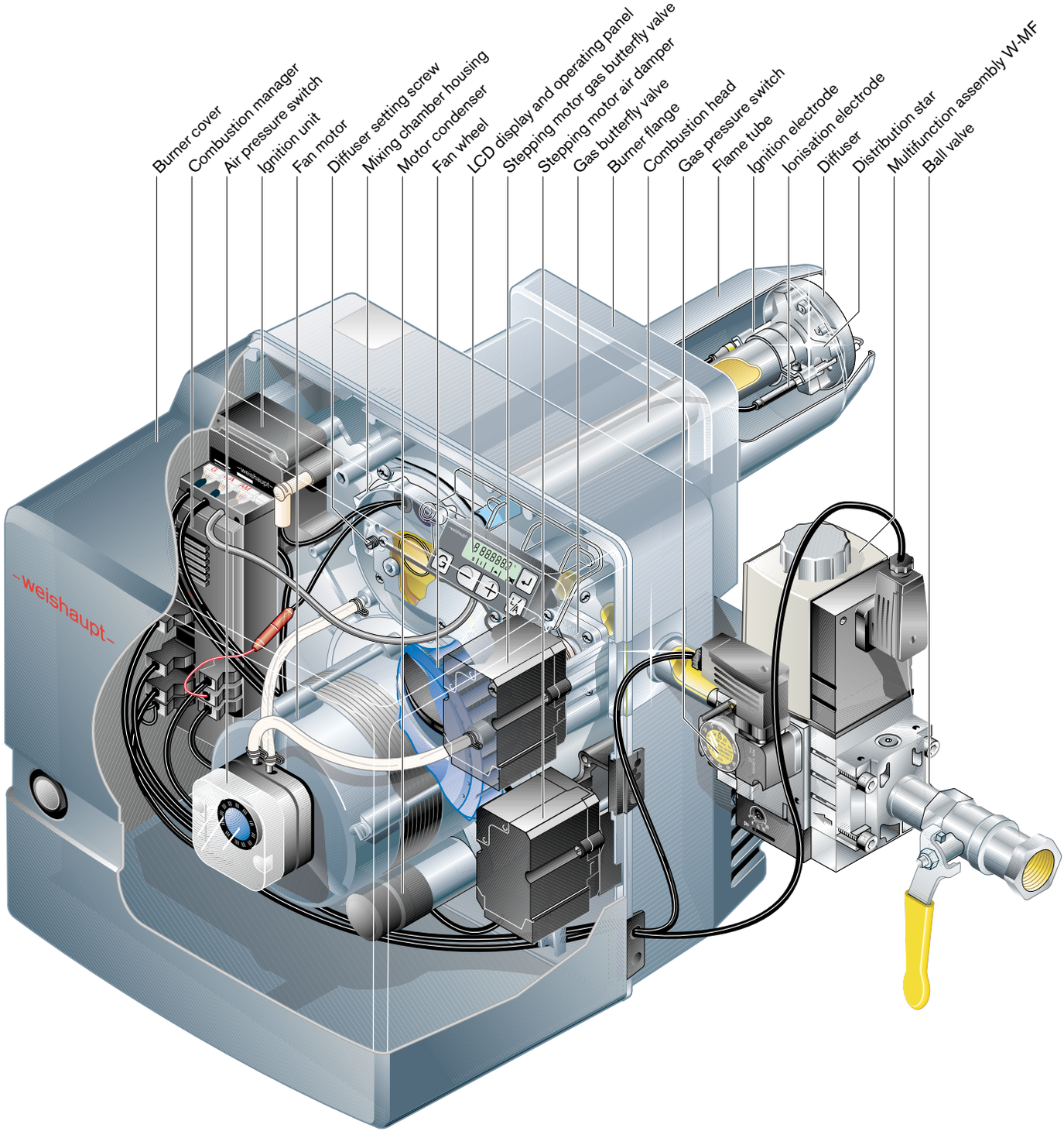

ПРОМЭЛЕКТРОНИКА / sales@prom-elec.com

Conformity Certification to ISO/IEC Guide 22

Confirmed by: Max Weishaupt GmbH

Address: Max Weishaupt Straße
D-88475 Schwendi

Product: Gas burner with fan
Type: WG10.../1-C, version ZM

The products described above conform to

Document No.: EN 676
EN 292
EN 50 081-1
EN 50 082-1
EN 60 335

In accordance with the guidelines

GAD	90/396/EU
MD	98/37/EU
PED	97/23/EU
LVD	73/23/EU
MC	89/336/EU
EED	92/42/EU

these products are labelled as follows

CE CE-0085BM0481

Schwendi 20.03.2002

ppa.
Dr. Lück

ppa.
Denkinger

Comprehensive Quality Assurance is ensured by a certified Quality Management System to DIN ISO 9001.

ПРОМЭЛЕКТРОНИКА / sales@prom-elec.com

Contents

1 General information 4

2 Safety information 5

3 Technical description 7
3.1 Permissible applications 7
3.2 Function 7
3.3 Operating unit 8

4 Installation 9
4.1 Safety information on installation 9
4.2 Delivery, transportation and storage 9
4.3 Preparation for installation 9
4.4 Burner installation 10
4.5 Valve train installation 11
4.6 Soundness test of valve train 12
4.7 Electrical connection 13

5 Commissioning and operation 14
5.1 Safety information on initial commissioning 14
5.2 Preparations for initial commissioning 14
5.3 Commissioning and setting 16
5.4 Sequence of operation and wiring diagram 23
5.5 Display and operating modes 25
5.6 Shut down periods 26

6 Fault conditions and procedures for rectification 27

7 Servicing 30
7.1 Safety information on servicing 30
7.2 Servicing plan 30
7.3 Mixing head - removal and refitting 31
7.4 Mixing head - setting 31
7.5 Ignition electrode and sensor electrode setting 32
7.6 Service position of housing cover 32
7.7 Removing and refitting fan motor and fan wheel 33
7.8 Removal and refitting of air stepping motor and air damper angle drive 33
7.9 Removing and refitting stepping motor of gas butterfly valve 34
7.10 Removing and refitting gas butterfly valve 34
7.11 Removing and refitting air regulator housing 35
7.12 Removing and refitting coil on multifunction assembly (W-MF...) 35
7.13 Removing and refitting gas filter on W-MF 36
7.14 Removing and refitting combustion manager 36

8 Technical Data 37
8.1 Burner equipment 37
8.2 Capacity graphs 37
8.3 Permissible fuels 37
8.4 Electrical data 37
8.5 Permissible ambient conditions 37
8.6 Dimensions 38
8.7 Valve train 39
8.8 Weights 39

Appendix
Gas throughput calculation 40
Combustion analysis 41

1 General information

These installation and operating instructions

- are an integral part of the equipment and must be kept permanently on site.
- are for the use of qualified personnel only.
- contain the relevant information for the safe assembly, commissioning and servicing of the equipment.
- are for the attention of all personnel working with the equipment.

Explanation of notes and symbols



This symbol is used to mark instructions, which, if not followed, could result in death or serious injury.



This symbol is used to mark instructions, which, if not followed, could result in damage to, or the destruction of the equipment and environmental damage.

☞ This symbol is used to mark procedures, which you should follow.

1. Procedures with more than one step are numbered.
2.
3.

❑ This symbol is used when you are required to carry out a test.

• This symbol is used to list points.

Abbreviations

Tab. Table
Ch. Chapter

Hand-over and operating instructions

The contractor is responsible for passing the operating instructions to the plant operator prior to hand-over. He should also inform the plant operator that these instructions should be kept with the heating appliance. The address and telephone number of the nearest service centre should be entered on the reverse of the operating instructions. The plant operator must note that an agent of the contractor or other suitably qualified person must inspect the plant at least once a year. To ensure regular inspections, -weishaupt- recommends a service contract.

The contractor should instruct the plant operator in the use of the equipment prior to hand-over and inform him as and when necessary of any further inspections that are required before the plant can be used.

Guarantee and liability

In principle, our “Conditions of Sale” are in force. Weishaupt will not accept liability or meet any guarantee claims for personal injury or damage to property arising as a result of one or more of the causes below:

- Failure to use the equipment as intended
- Improper assembly, commissioning, operating or servicing of the equipment.
- Operating the appliance with defective safety equipment, or with non-recommended or non-functioning safety and protection devices
- Failure to follow the information in the Installation and Operating Instructions
- Alterations made to the construction of the equipment by the plant operator
- Fitting additional components not tested or approved for use with the equipment.
- Alterations made to the equipment by the plant operator (e.g. motor ratio - rating and speed)
- Alterations made to the combustion chamber, which hinders constructive, predetermined flame formation
- Inadequate monitoring of parts liable to wear and tear
- Improperly executed repairs
- Acts of God
- Damage caused by continued use despite the occurrence of a fault
- Use of incorrect fuel
- Obstruction or damage of the supply lines
- Use of non-original -weishaupt- spare parts

2 Safety information

Dangers when using the equipment
Weishaupt products are manufactured in accordance with the relevant existing standards and guidelines and the recognised safety laws. However, improper use of the equipment could endanger life of the user or a third party, or result in damage to the plant.

To avoid unnecessary danger, the equipment is only to be used:
- for its intended purpose
- under ideal safety conditions
- with reference to all the information in the installation and operating instructions
- in accordance with inspection and service work

Faults, which could affect the safe operation of the burner, should be rectified immediately.

Personnel training
Only competent personnel may work on the appliance. Competent personnel according to this operating manual are persons who are familiar with the installation, mounting, setting and commissioning of the product and have the necessary qualifications such as:-
- Training, instruction or authorisation to switch electrical circuits and electrical devices on and off, to earth them and to mark them in accordance with the safety standards.
- Training, instruction or authorisation to carry out installation, alteration and maintenance work on gas installations in buildings and on site.

Organisational measures
- The necessary protective clothing should be worn by everyone working on the plant.
- All safety devices should be checked regularly.

Informal safety measures
- In addition to the installation and operating instructions, local codes of practice should also be adhered to. Special attention should be paid to the relevant installation and safety guidelines (i.e. Local Codes of Practice).
- All safety and danger notices should be kept in a legible condition.

Safety measures in normal operation
- Only use the equipment when all the safety devices are fully functional.
- At least once a year the equipment, including the safety devices, should be checked for signs of visible damage and to ensure that the safety devices are operating correctly.
- More frequent safety check may be required depending on plant conditions.

Safety measures when gas can be smelt
- Avoid open flames and spark generation (e.g. switching lights and electric units on and off)
- Open doors and windows
- Close gas shut off valve
- Warn all occupants and evacuate the building
- Inform heating company/installer and gas supplier - from outside of the building

Electrical safety
- Work on the electrical supply should be carried out by a qualified electrician.
- Electrical components should be checked during servicing. Loose connections and heat damaged cables should be dealt with immediately.
- The control panel should be locked at all times. Access should be restricted to authorised key holder personnel.
- Should it be necessary to carry out work on live parts, a second person should be present to switch off the mains supply in an emergency.

Maintenance and fault rectification
- Necessary installation, service and inspection work should be carried out at the specified time.
- Inform the operator before beginning any service work.
- For all service, inspection and repair work, electrically isolate the equipment and ensure the mains switch cannot be accidentally switched back on. Cut off the fuel supply.
- If, during servicing or testing, control seal joints have to be opened, these have to be thoroughly cleaned to ensure tight sealing when re-assembling. Damaged seals must be replaced. Carry out a soundness test!
- Flame monitoring devices, limit controls, correcting elements and all other safety devices must be commissioned by, and may only be replaced by, the manufacturer or an authorised agent.
- Screwed connections, which have been loosened, must be re-tightened without cross-threading.
- Following service work, all safety devices should be tested to ensure they are functioning correctly.

Alterations to the construction of the equipment
- No alterations to the equipment are to be made without the approval of the manufacturer. All conversions require written confirmation from Max Weishaupt GmbH.
- Any parts not in perfect working order should be replaced immediately.
- No additional components may be fitted, which have not been tested for use with the equipment.
- Use only -weishaupt- replacement and connection parts. Parts from other manufacturers are not guaranteed to be suitable to meet the necessary operational and safety requirements.

Alterations to the combustion chamber
- No alterations are to be made to the combustion chamber, which hinder constructive predetermined flame formation.

Cleaning of the equipment and waste disposal
- All materials used should be handled and disposed of correctly, with due regard to the environment.

General information for gas operation

- When installing a gas combustion system, regulations and guidelines must be observed (i.e. Local Codes of Practice and Regulations).
- The subcontractor responsible for the installation or changes to the gas system must inform the gas supplier of the type and extent of installation planned and the work intended.
  The subcontractor must ascertain that an adequate gas supply to the installation is ensured.
- Installations, alterations and maintenance work on gas systems in buildings and below ground, must only be carried out by installers who have a contract with the gas supplier.
- The gas pipework must be subject to a preliminary and main test or the combined loading test and soundness test, according to the pressure range intended. Burner must be isolated.
- The air or purge gas required for the test must be expelled from the pipework. The pipework must be completely purged.

Gas characteristics

The following information must be obtained from the gas supplier:

- Type of gas
- Calorific value in MJ/m^3 or kWh/m^3
- Max. CO_2 content of flue gas
- Gas supply pressure.

Pipe thread connection

- Only tested and approved sealing material should be used. Please observe the prevailing user instructions!

Soundness test

- see Ch. 4.6

Conversion to other gases

- When converting to another gas type, a conversion kit and re-commissioning is required.

3 Technical description

3.1 Permissible applications

The Weishaupt WG10 gas burner is suitable for:
- mounting on heat exchangers according to EN303-3 or DIN4702-1
- on warm water plant with intermittent or continuous operation (combustion manager will switch off once during 24h)

Any other use is only permissible with the written agreement of Max Weishaupt GmbH.

- The burner must **only** be operated with the type of gas given on the burner plate.
- The burner must **only** be operated under the permissible ambient conditions (see Ch. 8.5)
- The burner must **not** be used outside. It is only suited for operation inside.
- The burner must **not** be used outside of its capacity range (see capacity graphs, Ch. 8.2).
- The gas supply pressure must **not** exceed the gas pressure given on the burner plate.

3.2 Function

Burner type
Forced draught gas burner for two-stage or modulating operation.
For modulating operation a step controller or three-point step controller (available as accessory) is required.

Combustion manager
Main points:
- Microprocessor control and monitoring of all burner functions
- LCD display
- Keypad operation
- Data bus connection (eBUS)
- Integrated valve proving of the solenoid valves

LCD display and operating panel
The LCD display shows the individual programme steps and the current operating status. The burner is programmed via the keypad, which also allows you to call up information on the burner.

Stepping motors
Separate stepping motors control the gas butterfly valve and the air damper.
This allows optimal gas/air electronic compound regulation throughout the operating range of the burner.

Flame sensor
Monitors the flame during all phases of operation. If the flame signal does not correspond to the sequence of operations, a safety lockout will occur.

Multifunction assembly W-MF507
with the following functions:
- Pressure regulator
  Ensures a constant gas pressure to the burner, negating the affects of gas pressure variations of the gas supply main. The control pressure is commissioned with the setting screw.
- 2 Solenoid valves (class A)
- Gas filter
- Gas pressure switch
  If the gas pressure is insufficient the low gas programme is initiated. The gas pressure switch is also employed for automatic valve proving.

Air pressure switch
If the air supply fails the air pressure switch activates a safety shutdown.

Sequence of operations
Demand for heat from the appliance controller:
- Stepping motors function are tested
- Fan start - prepurge of the combustion chamber
- Ignition on
- Solenoid valves open - fuel release
- Flame formation
- Depending on heat demand the air damper and gas butterfly open in compound
- After 24 hrs. continuous operation a controlled shutdown and restart is activated.

Sufficient heat attained:
- Solenoid valves close
- Post-purge of the combustion chamber
- Valve proving of solenoid valves
- Burner switches off to Standby

Schematic of gas valve trains

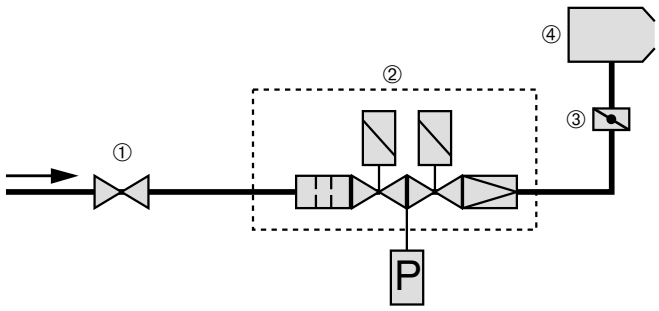

① Ball valve with thermal shut off device
② Multifunction assembly
③ Gas butterfly valve
④ Burner

Start up test at burner start
At each burner start, a function test of the stepping motors and the air pressure switch is carried out. If a deviation from the intended program is detected, start up is interrupted and the burner goes to lockout.

Low gas programme
The gas pressure switch monitors the min. gas pressure between the two valve seats of the W-MF. If the gas pressure switch has not been activated due to low gas pressure the burner start is interrupted. After a waiting time of 10 minutes a re-start of the burner is attempted. If the gas pressure is still too low, a third attempt at restarting the burner will commence after a further waiting time of 10 minutes. After the fifth unsuccessful attempt to start the burner, the start will only be attempted after a waiting time of one hour.

Valve proving
Following a controlled shutdown of the burner valve proving is automatically activated. The combustion manager checks for incorrect pressure increase and decrease within the gas section between the valves seats. If the gas pressure increase is correct and no pressure loss is present, the burner goes to "Standby" and the display shows *OFF*.

If the burner goes to lockout or shuts down due to power failure, valve proving is carried out at the next burner start:
- Burner shuts down during start up phase
- Valve proving
- Automatic restart

3.3 Operating panel

Operating panel with LCD display

Operating panel

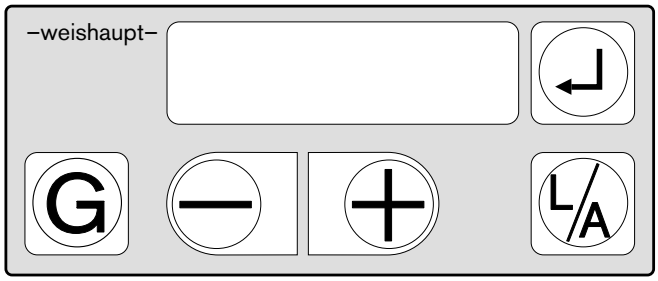

LCD Display

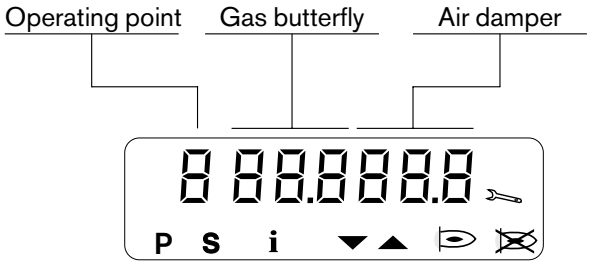

Key		Function
↵	Reset key, Info key	resets burner lockout, is used to obtain information in the info mode and service mode
L/A	Air damper	changes the air damper setting in the setting mode by pressing ⊖ or ⊕
G	Gas butterfly valve	changes the gas butterfly valve setting by pressing ⊖ or ⊕
– / +	Parameter changes	changes the air damper and gas butterfly valve, decrease ⊖ or ⊕ increase, changes individual set point

Symbol	Description
P	Setting mode active
S	Burner start
i	Info mode active
	Service mode active
	Stepping motor movement
	Burner operation (flame signal present)
	Lockout

Note In chapter 5.3 instructions for regulation and operation are given in detail.

4 Installation

4.1 Safety information on installation

Electrically isolate the plant



Prior to installation switch off the mains switch and the safety switch.

Failure to comply could cause death or serious injury by electric shock.

4.2 Delivery, transportation and storage

Check delivery
Check the delivery to see that it is complete and that there has been no damage in transit. If the delivery is incomplete or damaged, contact the supplier.

Transport
For transport weights of burners and valve trains see Ch. 8.8.

Storage
Please note the permissible ambient conditions for storage (see Ch. 8.5).

4.3 Preparation for assembly

Check burner nameplate
❑ The burner rating must be within the operating range of the heating appliance.
The ratings given on the burner nameplate are the minimum and maximum possible firing rates of the burner; see capacity graphs Ch 8.2.

Space requirement
Burner and valve train dimensions see Ch. 8.6. and Ch.8.7

4.4 Burner installation

Preparing the heat exchanger
The diagram shows the refractory for a heating appliance without cooled front. The front edge of the combustion head should protrude approx. 30 mm beyond the refractory. The refractory can, however, take a conical shape (≥ 60°). Refractory may not be required on boilers with water-cooled fronts, unless the manufacturer gives other instructions.

Combustion head	Dims in mm d_1	d_2	d_3	d_4	d_5	l_1
WG10-C	120	M8	150- 170	130	135	140

** Depending on type of heat exchanger.
See manufacturers information!

Refractory and drilling dimensions

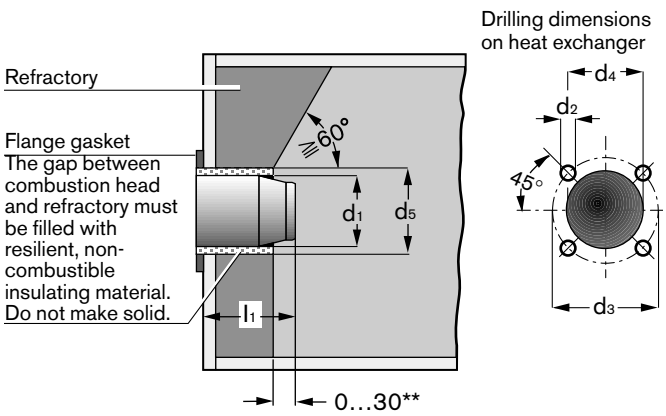

Burner mounting
1. Remove mixing head ⑤ (see Ch. 7.3)
2. Remove screws ④.
3. Separate the burner flange ② with flame tube from housing.
4. Fix burner flange with screw ③ to the boiler plate.
5. Place burner housing onto stay bolts ⑥.
6. Refit screws ④ and tighten.
7. Check setting of ignition and ionisation electrodes (see Ch. 7.4, CH. 7.5).
8. Refit mixing head (see Ch. 7.3, Ch. 7.4)
Ensuring that the gas-canal gasket is located properly.

Burner installation

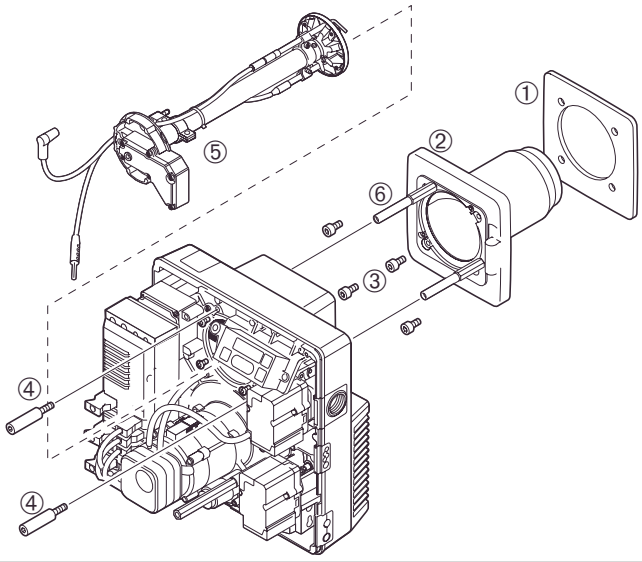

① Flange gasket
② Burner flange
③ Hexagonal screw
④ Hexagonal screw
⑤ Mixing head
⑥ Stay bolt

Fitting burner rotated by 180°
Procedure as above, however, the following measures are necessary:

- ☞ Burner flange ① mounted rotated by 180°
- ☞ Fit burner housing to stay bolt rotated by 180°
- ☞ Remove fixing angle ③ of the burner cover
- ☞ Mount operating panel ② with base plate to opposite side of housing.
- ☞ Mount fixing angle to bottom of housing.

Burner mounted rotated by 180°

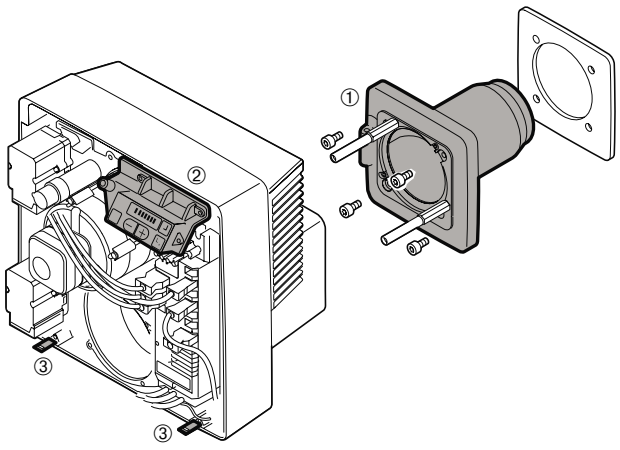

① Burner flange
② Operating panel
③ Fixing angle

DANGER

To avoid critical temperatures, which can lead to burns if the burner flange comes into contact with skin, it is important that the burner has been mounted correctly.

4.5 Valve train installation

Risk of explosion!
Gas leaks can lead to the build-up of explosive gas/air mixtures. With the presence of an ignition source, these then result in explosions.

To avoid accidents, please follow the following safety instructions on valve train installation.

- ☞ Before beginning work, close all the relevant shut off devices and ensure they cannot be accidentally reopened.
- ☞ Ensure the valve train components are correctly aligned and that all the joints are clean.
- ☞ Flange seals must be fitted correctly on the machined faces.
- ☞ Tighten screws evenly diagonally opposite.
- ☞ Valve trains must be mounted tension-free.
  Do **not** compensate for misalignment by over-tightening.
  Do not tighten or seal pipe thread connections while mounted on the burner.
- ☞ The valve trains must be fixed and supported securely.
  They must **not** be allowed to vibrate during operation.
  Supports suitable for the site should be fitted during installation.
- Only sealing agents tested and approved by the gas supplier must be used.
  The double nipples supplied have already been coated with an approved substance.

Mounting the valve train from the right

1. Remove the protective film from the gas connection flange.
2. Mount the components, pre-assembled, in the order shown in the diagram.

Note W-MF: Can be mounted in horizontal or vertical pipework.

Installation example

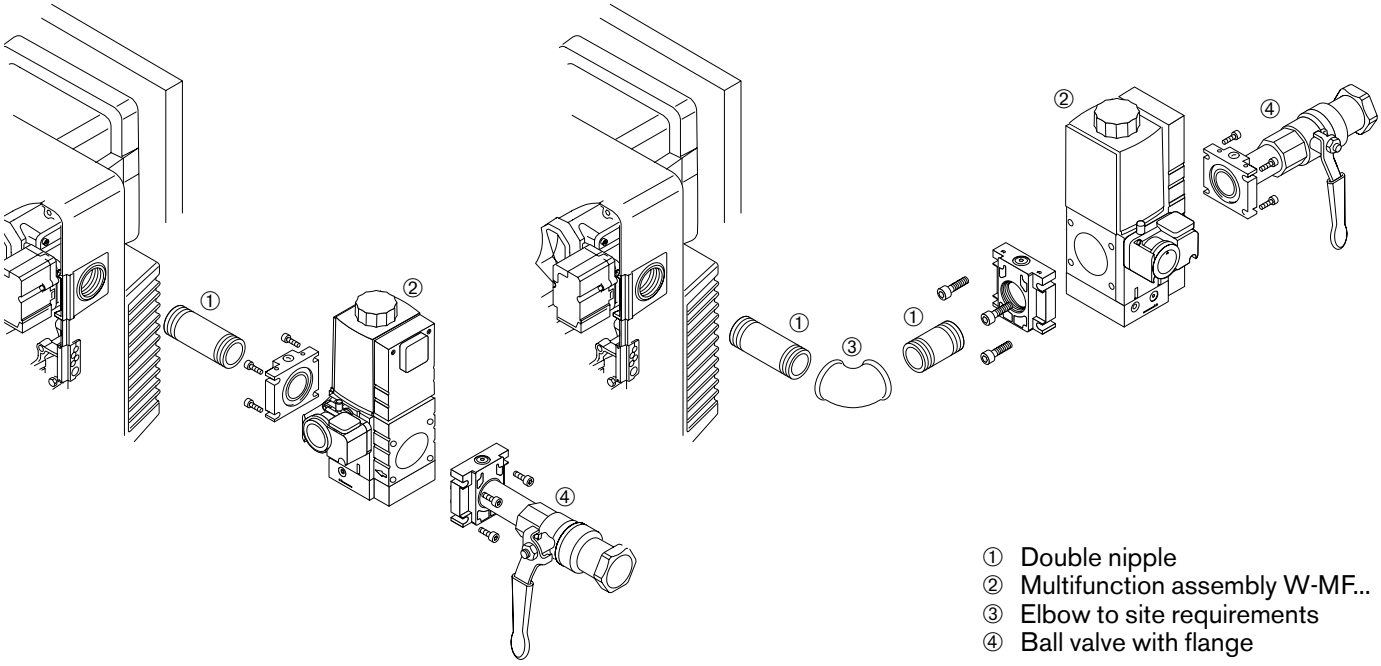

① Double nipple
② Multifunction assembly W-MF...
③ Elbow to site requirements
④ Ball valve with flange

Mounting the valve train from the left

With the burner rotated through 180°, the valve train as described above can be fitted from the left.
However, the following measures are required.

1. Prior to mounting the multifunction assembly:
   Remove gas pressure switch ③.
2. Remove closing plug ①.
3. Fit gas pressure switch on opposite side. Pay attention when fitting the O ring ②!
4. Refit closing plug on opposite side.

Converting gas pressure switch for valve train from the left

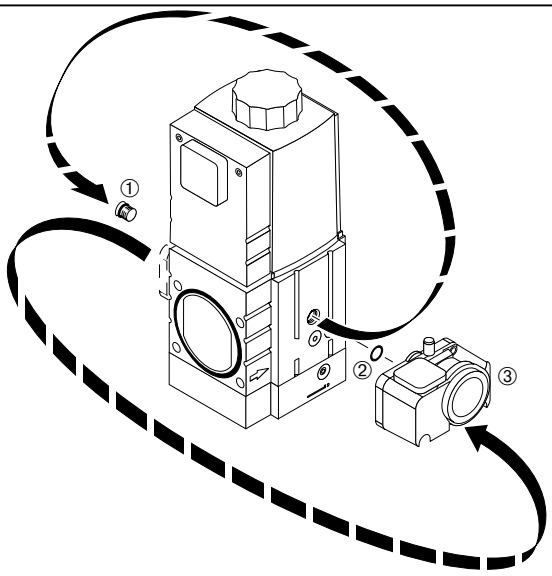

4.6 Soundness test of valve train

❑ The valve train soundness test must be carried out with the ball valve and solenoid valves closed.

Test pressure in valve train _____approx. 100 mbar
Waiting time for pressure equalisation _____5 minutes
Test time _____5 minutes
Max. permissible pressure drop _____ 1 mbar
(gas train design pressure max. _____ 500 mbar)

First test phase:
Ball valve up to first valve seat
1. Connect test assembly to test point ❶.
2. Open test point ❷.

Second test phase:
Between the valves and second valve seat
1. Connect test assembly to test point ❷.
2. Open test point ❸.

Third test phase:
Valve train connection parts and gas butterfly valve
1. Fit blanking plate ①
   (see notes Ch. 7.3)
2. Connect test assembly to test point ❸
3. Remove blanking plate ① once soundness test is complete. Spray with leak detecting solution during operation.
4. Tighten Torx screws on mixing head.

Note: To carry out an external soundness test, brush connection points with foam forming agents or similar, non-corrosive material, or electronic gas detector.

Test points on multifunction assembly
For the soundness test, the test points must be opened by loosening the screw in the test nipple.

☞ Close all test points once the soundness test is completed!

Documentation
☞ The results of the soundness test must be documented in the service report.

Soundness test

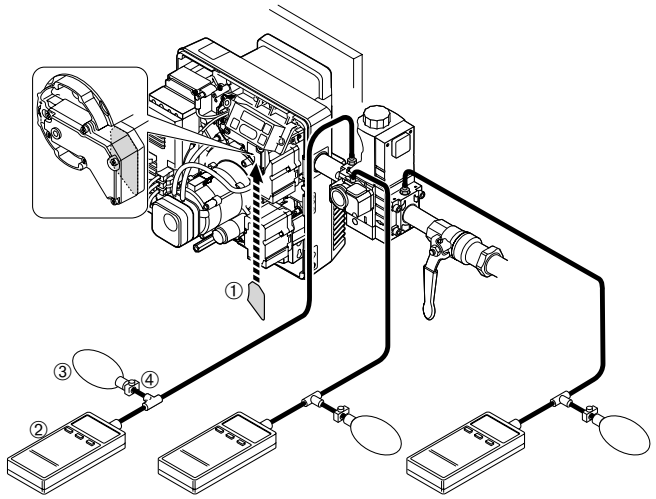

3rd Test phase | 2nd Test phase | 1st Test phase

① Blanking plate
② Measuring device (U tube or manometer)
③ Manual pump
④ Hose clamp

Test points on W-MF 507

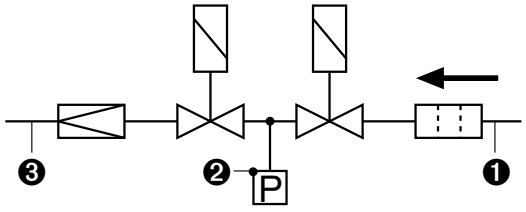

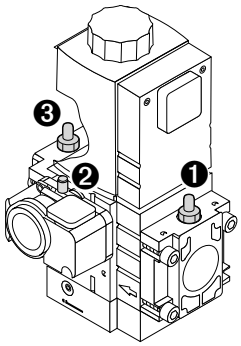

Test point ❶: Pressure into filter (inlet)
Test point ❷: Pressure between V1 and V2
Test point ❸: Gas pressure setting

4.7 Electrical connection

1. Check polarity of the connection plugs ② and ①. Wiring diagram see Ch. 5.4.
2. Plug 4 pole connection plug ① for ratings controller into combustion manager.
3. Plug in 7 pole connection plug ② of the appliance control.
4. Plug cables ③ and ④ leading from the burner housing into the gas pressure switch and solenoid valve (plugs are coded) and tighten screws.

Connection to the mains supply should be carried out to the wiring diagram relevant for the type of unit.

Notes for Austria
Electrical isolation having a minimum of 3 mm contact gap, acting on all poles, must be fitted adjacent to the burner. Possibilities are:
- Switch (without micro-contacts) with required separation characteristics
- Circuit breaker
- Contactor
- Screw in type fuse with clearly recognisable designation

Electrical connection

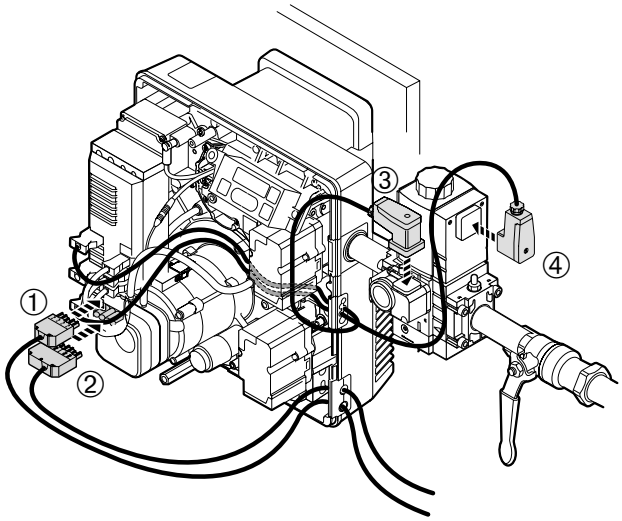

① 4 pole connection plug for ratings controller
② 7 pole connection plug of appliance control
③ Connection plug gas pressure switch
④ Connection plug multifunction assembly

5 Commissioning and operation

5.1 Safety information on initial commissioning

The initial commissioning must only be carried out by the supplier, manufacturer or their appointed agent. At this time, all control and safety equipment must be checked to ensure correct operation and, if they can be adjusted, it should be checked they have been set correctly.

Furthermore, the correct fusing of the circuits and measures for protection of electrical equipment and of associated wiring must be checked.

5.2 Preparations for initial commissioning

Purging the gas supply line
The gas supply line may only be purged by the local gas authority. Lines have to be purged with gas until the remaining air or inert gas has been expelled from the line. The ball valve on the gas train must be kept closed during supply line pressure tests and purging.

Note If work has been carried out on the gas line, i.e. exchanging of parts, valve trains or gas meters, re-commissioning may only be carried out after the relevant lines have been purged by the local gas authority.

Check gas supply pressure



Risk of explosion!
If the supply pressure is too high it can damage the valve train. The gas supply pressure must not exceed the maximum permissible valve train pressure given on the burner plate. Check the supply pressure before purging the valve train:

1. Connect manometer to the inlet of the multifunction assembly (test point ❶).
2. Slowly open the ball valve while watching the manometer.
3. Close the ball valve immediately if the supply pressure is seen to be going as high as the maximum permissible valve train pressure (**500 mbar**).
   Do **not** start burner!
   Inform the plant operator.

Check gas supply pressure

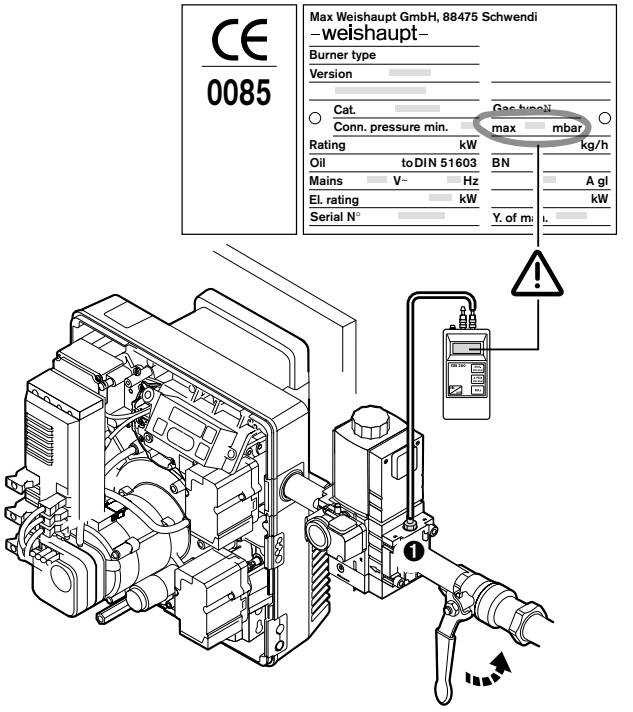

Purging the valve train

❑ The gas supply pressure must be correct.

1. Connect a hose, leading out to safe atmosphere, to test point ❶.
2. Open the ball valve.
   The gas in the valve train is vented to safe atmosphere via the hose.

For smaller gas quantities, a suitable test burner can be fitted to the outlet of the hose to burn off the gas.

Purging the valve train

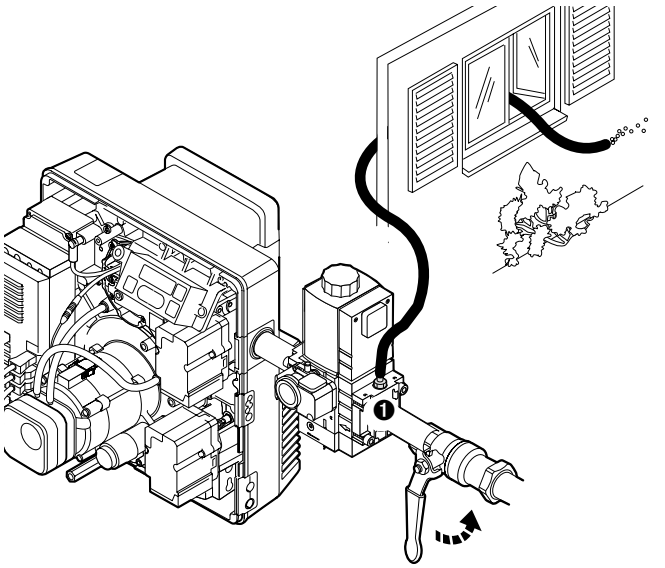

Connect a manometer
To measure the gas pressure during commissioning.
(Test point ❸)

Connecting a manometer for gas

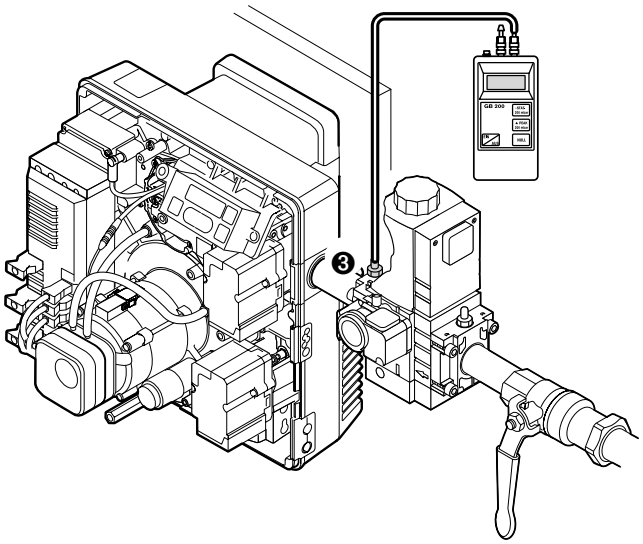

Checklist for initial commissioning

- ❑ The heating appliance must be assembled ready for operation.
- ❑ The operating instructions of the heat exchanger must be followed.
- ❑ The whole plant must be wired correctly.
- ❑ The heating appliance and the heating system must be sufficiently filled with heating medium.
- ❑ Flues must be free from obstructions.
- ❑ The ventilators on air heaters must work correctly.
- ❑ Sufficient fresh air must be available.
- ❑ The required test points for combustion analysis must be available.
- ❑ Ensure that the heat exchanger and the flue gas section up to the test opening are sound, so that the test results are not corrupted by extraneous air.
- ❑ Liquid level controls must be set correctly.
- ❑ Thermostat, pressure switch and other safety devices must be in operating position.
- ❑ There must be a demand for heat.
- ❑ Fuel lines must be purged of air.
- ❑ The soundness of the valve train must be tested and documented.
- ❑ The gas supply pressure must be correct.
- ❑ Fuel cut off devices must be closed.

Note Dependent on site requirements, further checks may be necessary. Note the instructions for the individual items of plant equipment.

5.3 Commissioning and setting

Determine values for pre-setting

1. Select and set the required pre-setting for the air damper and diffuser.
2. Determine gas setting pressure.
   (actual setting is carried out during burner commissioning)
3. Carry out gas throughput calculation for full and partial load (see appendix).
   Note instructions given by the appliance manufacturer.

The values have been calculated on test flame tubes (EN 676) under idealised atmospheric and combustion chamber conditions (maximum combustion chamber resistance to EN 303). Therefore small variations may occur when commissioning depending on individual installations.

These values result in an air factor Nr. of $\lambda \approx 1.15$.

Example 1
Required combustion heat rating: 60 kW
Combustion chamber pressure: 1.0 mbar

Results in:
Diffuser setting: 0 mm
Air damper setting: 50°

Example 2
Required combustion heat rating: 90 kW
Combustion chamber pressure: 1.5 mbar

Results in:
Diffuser setting: 6.7 mm
Air damper setting: 80°

Setting diagram for pre-setting air damper - diffuser

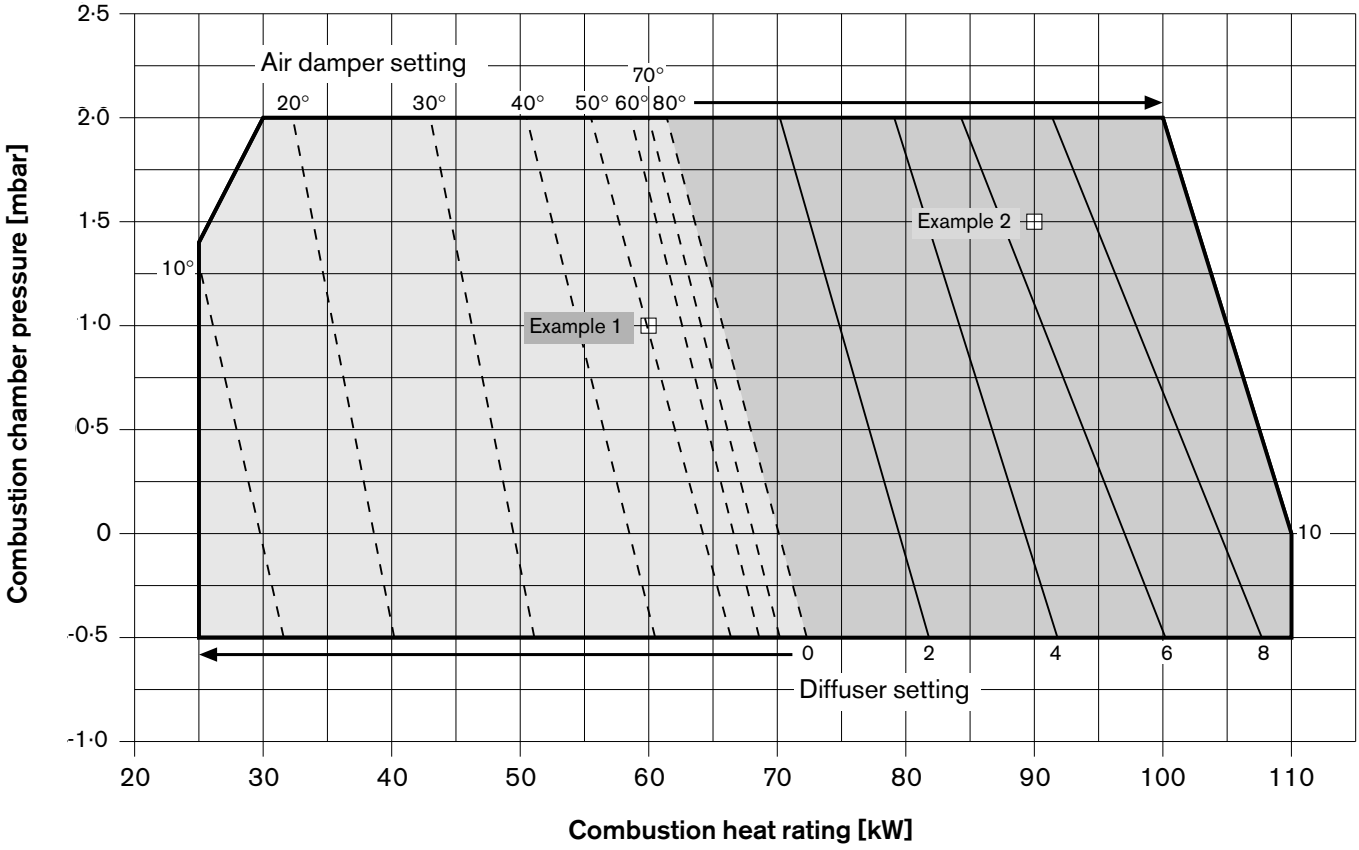

Setting screw for diffuser setting (dimension X)

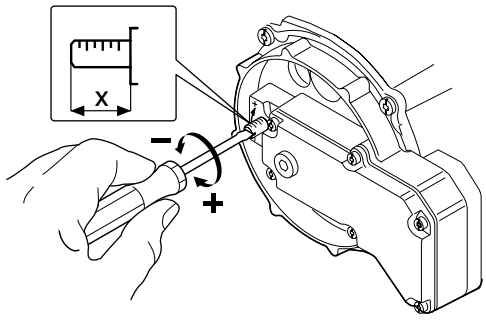

The setting screw is flush with the housing when dimension X = 0

Burner rating [kW]	Gas pressure into burner [mbar]	Connection pressure min. (flow pressure in mbar into shut off valve) Nominal diameter of valve train W-MF 507 **3/4”**
Natural Gas E, H_i = 37.26 MJ/m³ (10.35 kWh/m³), d = 0.606, W_i = 47.84 MJ/m³		
40	6·2	10·0
50	6·4	10·0
60	6·4	10·0
70	6·6	10·0
80	7·0	10·0
90	7·2	11·0
100	7·4	12·0
110	7·6	13·0
Natural Gas LL, H_i = 31.79 MJ/m³ (8.83 kWh/m³), d = 0.641· W_i = 39.67 MJ/m³		
40	7·9	12·0
50	8·6	12·0
60	7·4	12·0
70	7·9	12·0
80	8·5	13·0
90	8·6	14·0
100	9·4	15·0
110	9·6	16·0
LPG B/P, H_i = 93.20 MJ/m³ (25.89/m³), d = 1.555, W_i = 74.73 MJ/m³		
40	4·3	8·0
50	4·0	8·0
60	4·7	9·0
70	5·4	9·0
80	5·8	10·0
90	6·6	11·0
100	7·2	12·0
110	7·8	12·0

The information given for calorific value Hi and the Wobbe index Wi relate to 0°C and 1013.25 mbar.

The results of the table have been calculated on flame tubes under idealised conditions (p_F = 0 mbar). The values are therefore guidelines for basic settings. Small variations may occur when commissioning depending on individual installations.

Note The combustion chamber pressure has to be added to the setting pressure listed above.

Ideally the minimum connection pressure should not be below 15 mbar.

Set gas pressure

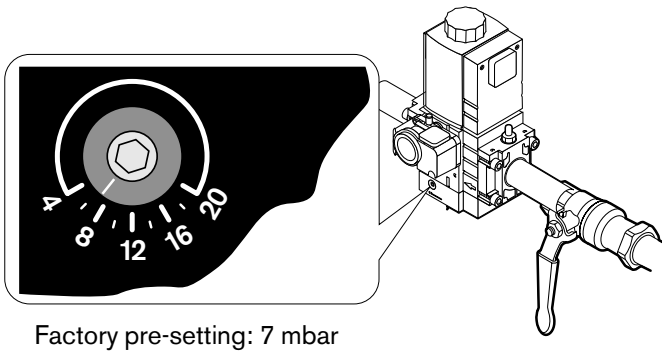

Factory pre-setting: 7 mbar

Note The total ratings range is always described with 10 operating points (P0 to P9). Each operating point is defined by a specific gas butterfly valve and air damper setting.

*) bu ≙ is the partial load setting required ≙ partial load

Partial load
Partial load is the appliance manufacturer's low-fire limit. Setting a lower firing rate than recommended can lead to appliance damage.

Description of operating points			Factory presetting gas butterfly	Factory presetting air damper
P0	Ignition load		11.0°	11.0°
P1	bu*)	Minimum load	10.0°	10.0°
P2 P3 P4 P5 P6 P7 P8		Intermediate load points	are set by the combustion manager as equalised settings	
P9	Full load		80.0°	80.0°

Action	Appliance's response	Display
Pre-setting on the combustion manager		
1. Unplug bridging plug 7 on the combustion manager.		
2. Connect voltage supply on the burner. Mains switch "ON"	Combustion manager goes to "Stand by" position.	OFFUPr
3. Press Ⓖ and Ⓛ/A simultaneously.	Combustion manager changes to setting mode.	E GAS -r P
4. Press ⊕	Display shows factory pre-setting at full load P9.	9 80.0 80.0 G L/A P
5. Hold down Ⓛ/A and by pressing ⊖ or ⊕ adjust the air damper setting (noted value from the diagram)		
6. Hold down Ⓖ and by pressing ⊖ or ⊕ set the gas butterfly valve to the same value.		
7. Press ⊕.	Display shows factory pre-setting at minimum load P1.	1 10.0 10.0 G L/A P
8. Press ⊕ to confirm pre-set value.	Display shows factory pre-setting at ignition load P0.	0 1.0 1.0 G L/A P
9. Press ⊕ to confirm pre-set value.	Burner is now ready for operation.	GAS -r P
Function test with ball valve closed ❑ Thermostat circuit T1/T2 must be closed		
1. Briefly open ball valve and then close it again.		
2. Plug in bridging plug 7 on the combustion manager. **Attention!** Only proceed when the low gas program functions correctly.	Burner starts in accordance with the sequence of operations. The gas pressure switch establishes that there is insufficient gas. The burner tries to restart. After two or three attempted starts, the combustion manager causes the burner to lockout due to the lack of gas (low gas pressure program).	16 01 59
3. Remove and replace the 7-pole connection plug to interrupt the low gas program.		OFFUPr

Note Should a controlled shutdown of the burner occur whilst setting the burner, continue as follows:
1. Press ⊖ and ⊕ simultaneously.
2. Go to the last load point set by pressing ⊕

Record the values given on the display for every set point and their relevant ratings (gas throughput). This will assist you when setting partial load.



Danger of explosion!
CO formation due to incorrect burner setting.
Check CO content at each operating point.
If CO is detected, adjust combustion values.
CO content should not exceed 50 ppm at this time.

Action	Appliance's response	Display
Commissioning 1. Open the ball valve.		
2. Press ⊖ and ⊕ simultaneously.	Burner starts in accordance with the sequence of operations and runs to ignition load P0.	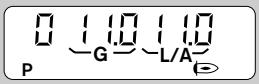
3. Set setting pressure on the governor (value from the table + combustion chamber resistance)		
Adjust full load 1. Press and hold ⊕ for 1 second.	Burner runs to P1	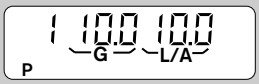
2. By pressing ⊕ , slowly drive the burner to full load point P9. Monitor the CO values of flue gas at all the intermediate load points. If necessary adjust combustion values by pressing G ⊕ or G ⊖ .		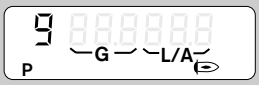
3. Carry out gas throughput measurements at full load (see appendix).		
4. Optimise the gas throughput by adjusting the gas pressure or gas butterfly valve. (Keep G pressed down and by pressing ⊖ or ⊕ adjust the gas butterfly valve setting)		
5. Keep L/A pressed down and optimise combustion by pressing ⊖ or ⊕ (see appendix). If the required rating cannot be reached, see notes below.		
Adjust intermediate load points 1. Press ⊖ .	Values for P9 are saved. Burner runs to P8.	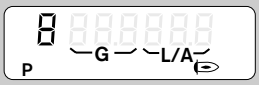
2. Keep G pressed down and optimise combustion values by pressing ⊖ or ⊕ .		
3. Press ⊖ .	Values for P8 are saved. Burner runs to P7.	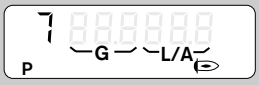
4. Set points P6 to P1 as for P8 above.		
5. Once P1 has been set, press ⊕ to save all values.	Burner runs to P2	

Problems when matching ratings?

The air damper and the gas butterfly valve cannot be altered randomly in the individual operating points. If an exact rating cannot be matched the diffuser setting will have to be corrected. If the rating is too high at diffuser setting 0, the pre-setting of P9 must be corrected:

1. Unplug bridging plug 7 on the programme manager. Burner goes to the standby position.
2. Continue as described in "Pre-setting on the combustion manager". Re-set air damper setting P9.

Action	Appliance's response	Display
Adjust ignition load		
1. Unplug bridging plug 7 from the combustion manager.	Burner switches off. Combustion manager runs to standby position.	
2. Press ⊖ and ⊕ simultaneously.	Combustion manager changes to setting mode.	
3. Replace bridging plug 7.	Burner starts and remains in ignition position P0.	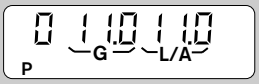
4. Keep G pressed down and by pressing ⊖ or ⊕ set the gas butterfly valve so that flue gas has an O_2 value of 4 - 5%. **Note** The gas governor setting pressure must not be changed!		
5. Press and hold ⊕ for 1 second to save values.	Burner runs to P1.	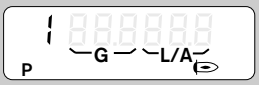
Set partial load		
1. By pressing ⊕, slowly drive the burner to P9.		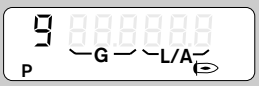
2. Press G and L/A simultaneously.	Burner runs to partial load (bu).	
3. Keep L/A pressed down and by pressing ⊖ or ⊕ set the value for partial load. **Note:** Pay attention to appliance manufacturer's instructions.		
4. Press G and L/A simultaneously. **Attention** Burner operation is only possible once step 4 has been completed.	Values for partial load are saved. Combustion manager changes from setting mode to operating mode. The burner is set.	

Test start

1. Interrupt the power supply to the burner (e.g. unplug the 7 pole connection plug, wait for 2 or 3 seconds and then reconnect it).

Burner
- starts in operating mode
- interrupts the start up
- carries out a valve proving test
- restarts
- drives to partial or full load

2. Record all settings on the sticker included and affix it to the mixing chamber housing.

Additional correction of settings

1. Burner runs into operating mode
   Unplug bridge plug 7 from combustion manager.
   Burner in "Standby" position.
2. Simultaneously press ⊖ and ⊕.
   Combustion manager changes to setting mode.
3. Plug in bridging plug 7.
   Burner starts and remains in ignition position P0.
4. Drive to the individual load points P1 to P9 by pressing ⊖ or ⊕.
5. Enter new setting values on sticker and cover old sticker.

Note If further changes of the gas setting pressure or the diffuser setting are required, the whole burner setting (including pre-setting) has to be repeated.

Setting the gas pressure switch
Factory pre-setting: 12 mbar
The switch point must be checked and adjusted during commissioning.

1. Connect a manometer at the test point between V1 and V2 of the W-MF.
2. Start the burner (full load).
3. Slowly close the ball valve until the gas pressure drops to half the value, monitoring CO value and flame signal.
4. Turn setting cam to the right, until the combustion manager starts the low gas pressure program. Minimum value: 12 mbar.
5. Open ball valve.
6. Press reset-button to interrupt the low gas pressure program.
   Burner must start without low gas pressure program.

Gas pressure switch

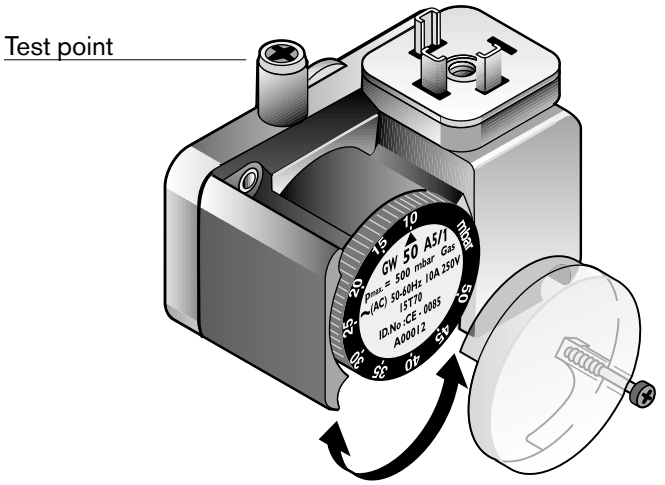

Set air pressure switch
Factory pre-set: 3.5 mbar
The switch point must be checked and adjusted during commissioning.
For this a differential pressure measurement between points ① and ② is required.

1. Install manometer as shown in the picture.
2. Start the burner.
3. Drive through the setting range of the burner, observing pressure behaviour at manometer.
4. Determine the lowest differential pressure value.
5. Set 80% of the lowest differential pressure at the setting adjuster.

Example:
Lowest differential pressure: _____ 3·2 mbar
Switch point air pressure switch: ___ 3·2 x 0·8 = 2·6 mbar

Note Installation dependant influences on the air pressure switch, such as flue gas system, heat exchanger, installation or air supply, may result in readjustments having to be made to the settings.

Air pressure switch

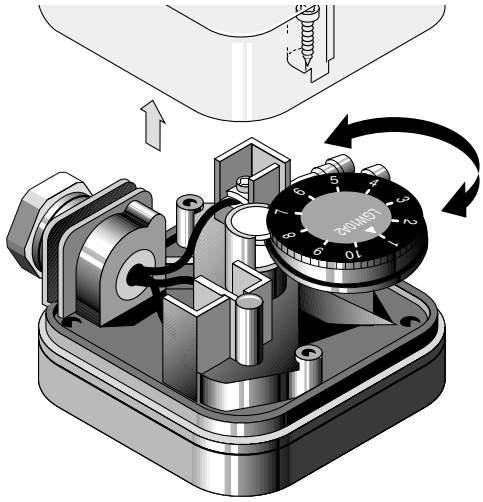

Differential pressure test

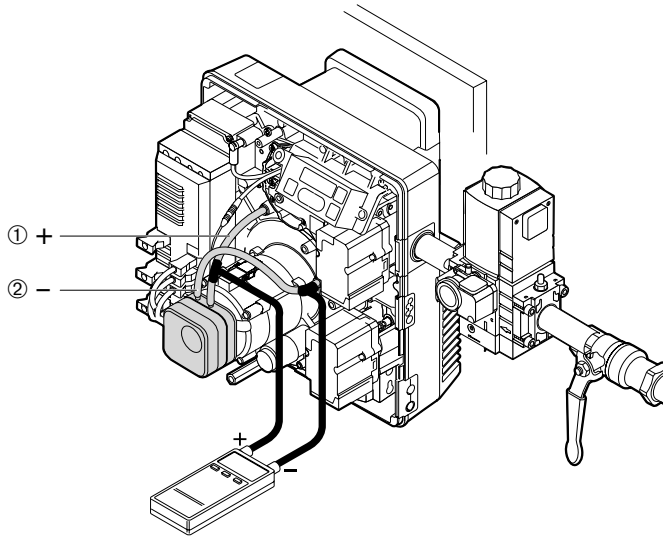

Test ionisation current
If a flame has formed, an ionisation current flows.

Response sensitivity of the flame sensor: _____ 1 µA
Minimum recommended ionisation current: _____ 5 µA

Test equipment:
Multiple test instrument or ammeter.

Connection:
A plug coupling fitted to the ionisation line is used for connection to the test equipment.

Test ionisation current

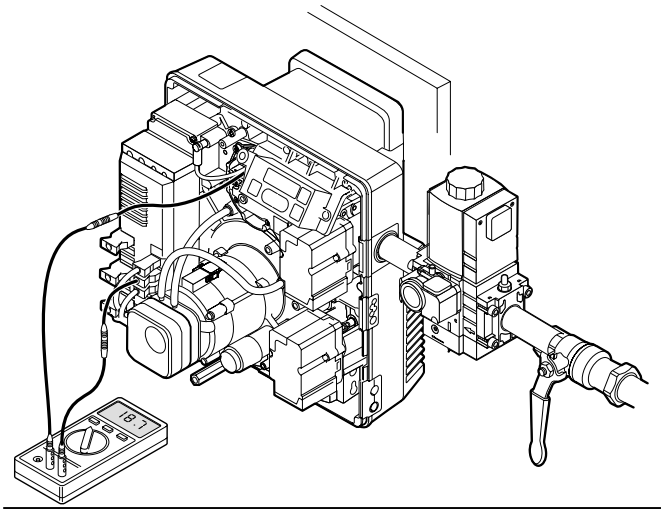

Concluding work
1. Record test results of the flue gas test on the inspection card.
2. Note values on sticker.
3. Remove test unit and fit burner cover.
4. Advise operator on use of equipment.

Sticker for burner settings

weishaupt
Burner Setting

Date:

Diffuser setting: mm

Gas setting pressure at full load: mbar

Setting at Combustion Manager

Air damper pre-setting at full load (P9)

Point	G	L/A
P0		
P1		
P2		
P3		

5.4 Sequence of operation and wiring diagram

Sequence of operation diagram

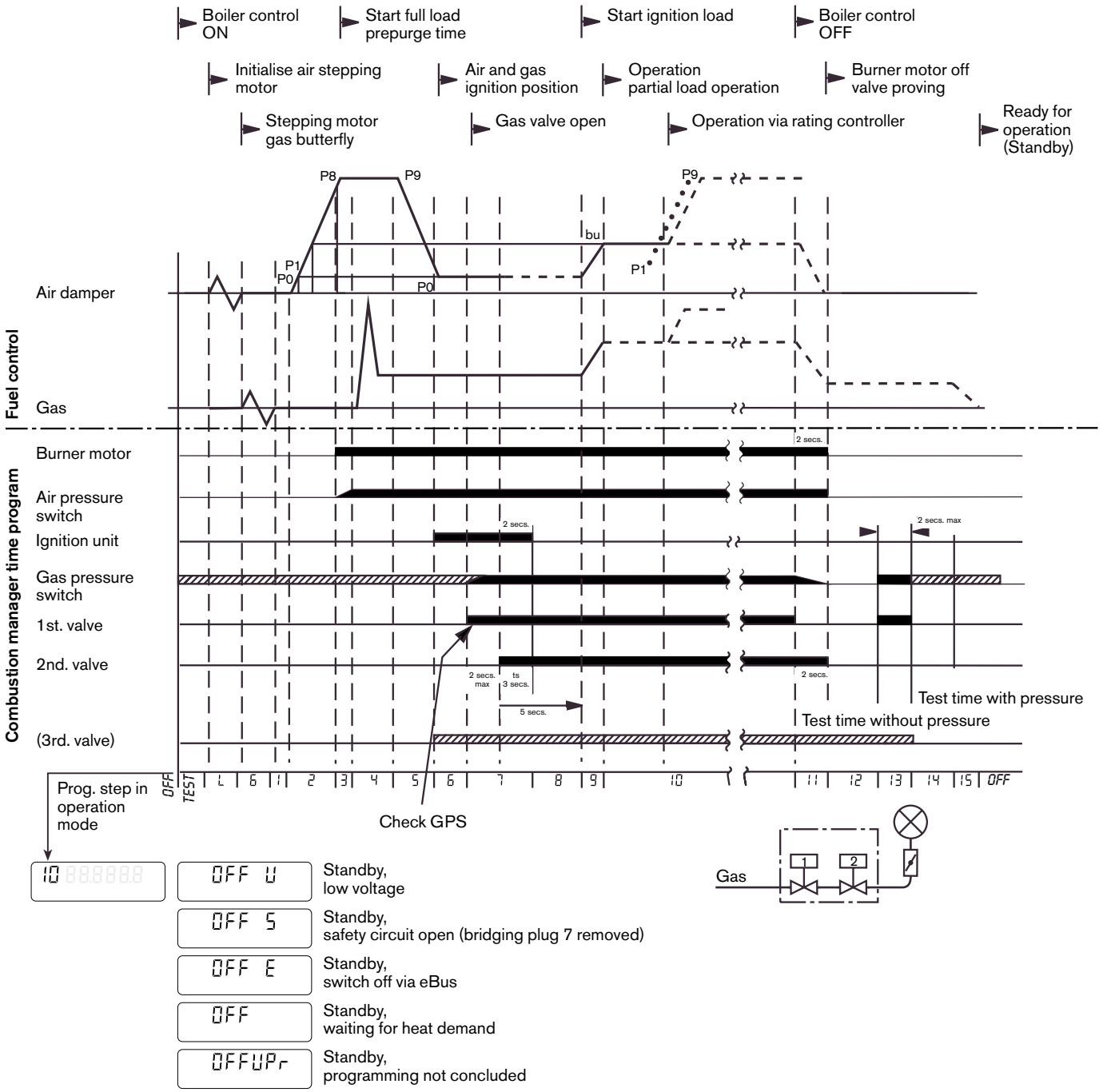

Switch times

Start-up waiting time (test)	3 secs.
Pre-purge time (Weishaupt works-setting)	20 secs.
Safety time	3 secs.
Pre-ignition time	2 secs.
Stabilisation time	2 secs.
Post ignition time	2 secs.
Test phase valve proving (1. valve)	16 secs. phase 1
(2. valve)	8 secs. phase 2
Stepping motor run time in operation	
full setting movement	max. 40 secs.
reduced setting movement	min. 25 secs.

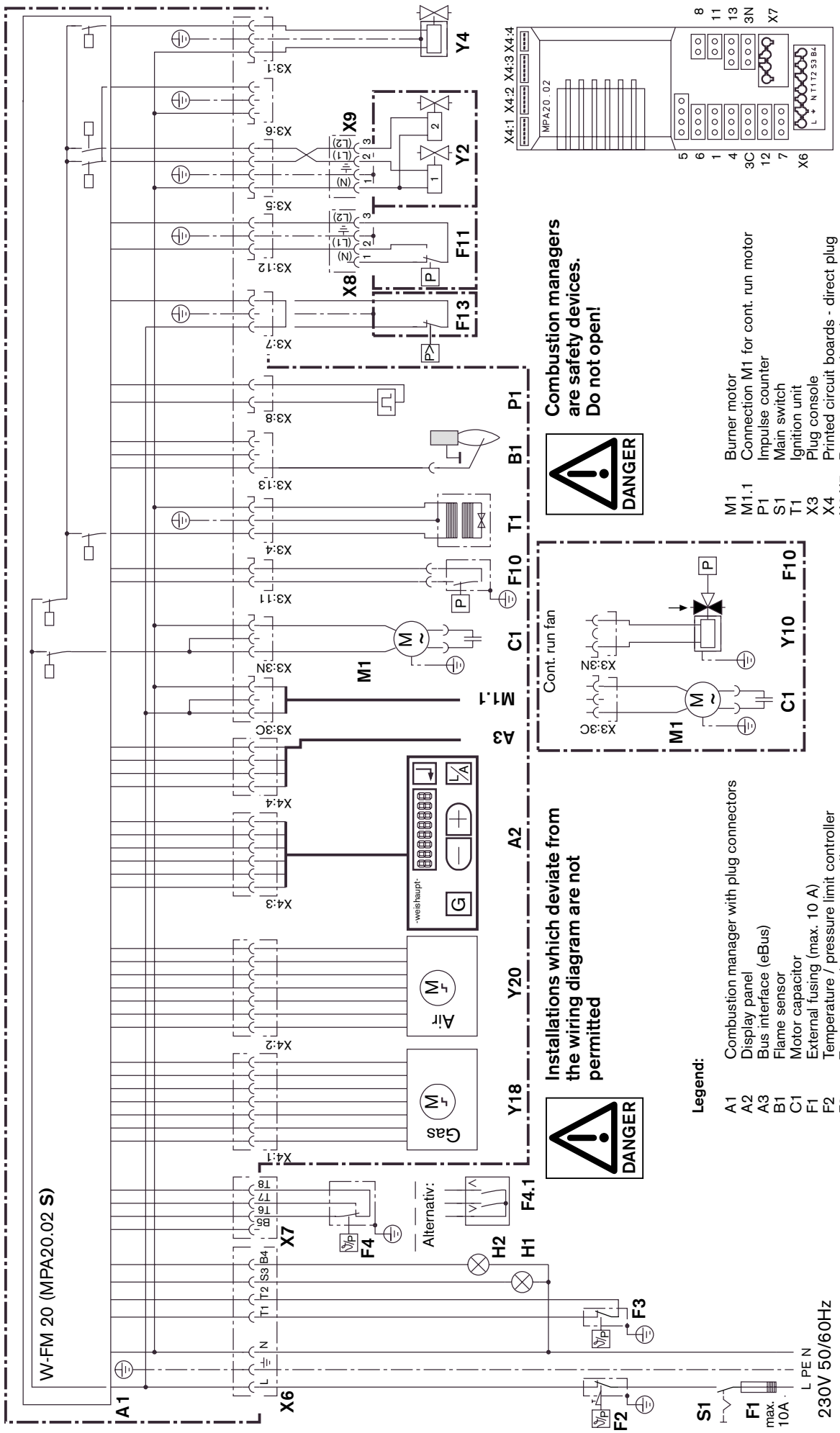
W-FM 20 (MPA20.02 S)
A1
X6
L PE N
230V 50/60Hz
S1
F1
max. 10A
F2
F3
F4
F4.1
H1
H2
X7
Alternativ:
Gas
Air
Y18
Y20
A2
A3
M1
M1.1
C1
F10
T1
B1
P1
F11
F13
X8
X9
Y2
Y4
Cont. run fan
Y10
Installations which deviate from the wiring diagram are not permitted
DANGER
Combustion managers are safety devices. Do not open!
DANGER
X4:1 X4:2 X4:3 X4:4
MPA20.02
X6
X7
Legend:
A1 Combustion manager with plug connectors
A2 Display panel
A3 Bus interface (eBus)
B1 Flame sensor
C1 Motor capacitor
F1 External fusing (max. 10 A)
F2 Temperature / pressure limit controller
F3 Temperature / pressure controller
F4 Temperature / pressure controller full load
F4.1 Stepping regulator for modulating control
F10 Air pressure switch
F11 Low gas pressure switch
F13 High gas pressure switch
H1 Fault lamp
H2 Operation lamp
M1 Burner motor
M1.1 Connection M1 for cont. run motor
P1 Impulse counter
S1 Main switch
T1 Ignition unit
X3 Plug console
X4 Printed circuit boards - direct plug
X6,X7 Burner connection plugs
X8,X9 Gas valve train connection plugs
Y2 Double solenoid valve
Y4 External valve (liquid petroleum gas)
Y10 Air pressure switch valve (continuous running fan)
Y18 Gas stepping motor
Y20 Air stepping motor

5.5 Display and operating modes

In addition to the setting mode, the combustion manager also has:
- Operating mode (see Ch. 5.4)
- Info mode
- Service mode
- Parameter mode
- Error messages

Display and operating panel

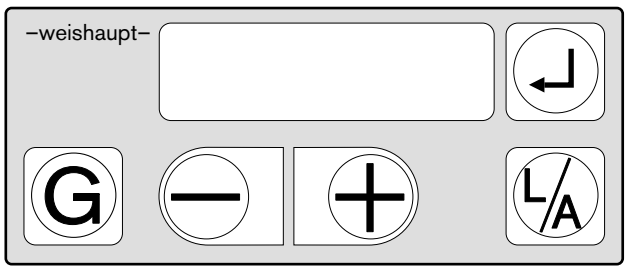

Info mode
The information mode can be selected at every stage of the burner sequence whilst it is in operating mode.
☞ Press ↵ for about 0.5 seconds.
The display will show the relevant value next to an INFO No.

To call up the next information:
☞ Press ↵ for about 0.2 seconds.



Example:
Fuel consumption:
72 m³

No.	Display value
0	Fuel consumption in m³ (calculated at impulse counter input)
1	Total number of hours run for the gas burner
2	–no function–
3	Number of burner settings carried out (burner starts)
4	Software No of combustion manager
5	Date of software
6	Unit No.
7	Test date of the unit
8	Current eBus address
9	Valve proving *ON / OFF* is not an option)
10	Current eBus address regulator

After Info No. 10 or after a 20 second timeout, the unit returns to the operating mode display.

Service mode
The service mode can be selected at every stage of the burner sequence whilst it is in operating mode.
☞ Press ↵ for about 2 seconds.
At first, the display will show **i** for about 1.5 secs., shortly afterwards the symbol 🔧 will appear.

To call up the next service information:
☞ Press ↵ for about 0.2 seconds.

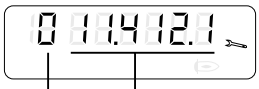

Example: Gas butterfly valve setting at operating point P0 11.4°, air damper setting 12.1°

No.	Display value	
0	Gas butterfly valve and air damper setting at	P0
1		P1
2		P2
3		P3
4		P4
5		P5
6		P6
7		P7
8		P8
9		P9
10	last error	
11	second to last error	
12	third to last error	
13	fourth to last error	
14	fifth to last error	
15	sixth to last error	
16	flame intensity: *00* no flame *01* flame signal weak ➝check! *02* flame signal ➝check! *03* flame signal optimum	

After Service info No. 16 or after a 20 second timeout, the unit returns to the operating mode display.

Parameter mode
(For qualified personnel only)
This mode can be accessed only when the display shows *OFF*.

1. Remove the burner cover.
2. Remove bridging plug 7.
   Burner goes into standby, the display shows *OFF*
3. Press ↵ and ⊕ simultaneously for about 2 secs.
   the display shows *Pnr.0 3*

To change the values:
☞ Press ⊖ or ⊕.

To go to the next parameter:
☞ Press ↵.

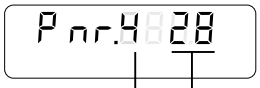

Example:
Post-purge time 28 secs.

No.	Value	
0	*3*	Note on parameter level (can not be altered)
1	*03H, 13H, 33H, 73H, F3H*	Detail of the eBUS address
2	*0* to *25,5*	Air damper setting in Standby Position in degree of angles 0...25·5°
4	*0* to *240*	Post-purge time in seconds
5	*0* or *1*	*0* = no errors stored *1* = errors stored. To delete error memory: ☞ Press and hold ⊕ and ⟲ for 2 secs.
6	*1* to *255*	Factor for the determination of fuel consumption. Set according to the impulse rate of the counter. Factory setting: 200 Impulse rate: Impulse of the counter per 1 m³ (or low frequency output NF)
8	*10H, 17H, 30H, 37H, 70H, 77H, F0H, F7H*	eBus regulator address
*9**	*0* to *100*	Fan speed in % for continuous running fan in Standby mode
*10**		Selection gas valve train
	ON	DMV - VEF (2 gas pressure switches)
	OFF	W-MF - VEF (1 gas pressure switch)

After parameter No. 10 or after a 20 second timeout, the unit returns to the operating mode display.

* Only in conjunction with speed control

Error messages
The combustion manager is equipped with an error messaging system. The function fault that triggered the lockout is displayed as an error code.

To reset the burner:
☞ Press ↵.

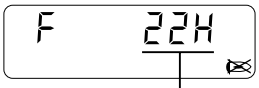

Example:
Gas pressure switch did not change over (Display flashes!)

No.	Error message
01...15	Internal unit fault (RAM / ROM test and time monitoring)
28...32	Internal unit fault (program modules)
70...79	Internal unit fault (low voltage and Pin short circuit tests etc.)
45...5C	Internal unit fault (calculation of characteristics values)
20	Air pressure switch contact not in off position at burner start
21	Air pressure switch contact has not changed over
22	Gas pressure switch contact has not changed over
25	No flame signal after safety time
26	Extraneous flame signal
27	Flame-signal loss during operation
28	Flame sensor short circuit
42	Switched off by plug 7
43	Valve V1 leaking during valve proving or gas pressure switch does not trip
44	Valve V2 leaking during valve proving
60	Air stepping motor does not start reference point 0 correctly.
61	Gas stepping motor does not start reference point 0 correctly.
63	Run time of air damper motor has been exceeded.
64	Run time of gas butterfly valve motor has been exceeded.
65	Burner type not recognised at start.
66	Gas butterfly valve connection plug incorrect; air stepping motor or angle drive
67	General fault on stepping-motor control
68	Return signal of air damper stepping motor faulty.
69	Return signal of gas butterfly valve stepping motor faulty.
6A	Tolerance fault on air damper stepping motor.
6B	Tolerance fault on gas butterfly valve stepping motor.
6C	Step control of air damper stepping motor faulty.
6D	Step control of gas butterfly valve stepping motor faulty.
6E	Stepping motor connections mixed up
6F	Error during burner recognition or stepping motor plug not connected

5.6 Shutdown periods

For short breaks in operation
(e.g. flue cleaning etc.):
☞ Isolate the burner from the power supply

For longer breaks in operation:
1. Isolate the burner from the power supply
2. Close all fuel cut-off devices

6 Fault conditions and procedures for rectification

If the burner is found out of operation, in lockout the display will show a fault code.
If other fault codes are shown, check first that the basic requirements for operation are met.

- ❏ Is there a supply of electricity?
- ❏ Is the gas pressure supplied by the mains correct and is the ball valve open?
- ❏ Are all controls for room and boiler, liquid level interlocks, limit switches etc. set correctly?

If it has been established that the lockout is not due to any of the above, all the burner functions must be checked.

Reset: Press ⏎



To avoid damage to the plant, do not reset the burner more than twice.
If the burner locks out for a third time call for a service engineer.



Fault conditions should be rectified only by qualified and experienced personnel.

Note

The following table provides only a summary of possible faults. For further error codes see Ch. 5.5.

Condition	Cause	Remedy
Blank display Burner not operating	No electric supply	Check electrical supply and fusing
	Faulty fuse	Replace fuse (10 A slow)
	Limiter from L1 on 7-pole plug has switched off	Reset limiter
Voltage present at inlet L1 on 7 pole plug, but display blank	MP short circuited	Repair short circuit
	7-pole plug connection to combustion manager plugged in incorrectly	Check plug connection
	Combustion manager defective	Replace combustion manager (see Ch. 7.14)
Burner is operating but display is blank	Faulty connection plug on combustion manager	Rectify fault
	Faulty display	Replace display panel
Display permanently shows OFF	Control circuit not closed	Check why the controller is open between T1/T2 on the 7-pole connection plug.
	7- pole connection plug	Check plug connectionnot fitted correctly
Display shows OFFUPr	Programming not complete	Complete the programming
Ionisation monitoring Burner starts, ignition is too low audible, flame formation normal, then lockout	Ionisation current fluctuates	Change position of sensor electrode; remove possibly high resistance in ionisation cable and terminals (tighten terminals)
	Ionisation current not present or too low	With unearthed mains (control transformer) the pole used as MP conductor must be earthed.
	Gas/air ratio setting incorrect.	Adjust (see commissioning)
Error message F 26H	Extraneous flame signal	Investigate extraneous signal during pre-purge
	Flame sensor defective	Replace flame sensor
Error message F 26H	Flame sensor short circuit	Rectify short circuit

Condition	Cause	Rectification
Burner motor		
Burner motor no longer runs. Error message: *F 21H*	Capacitor defective	Check capacitor and replace if necessary
	Burner motor defective	Check burner motor and replace if necessary (see Ch. 7.7)
Burner motor will not start. Display shows *2* for 30 secs, then restarts. After 5 restarts display shows error message: *F 20H*	Air pressure switch remains closed	Replace air pressure switch
Burner motor runs continuously, Lockout Error message: *F 20H*	Motor relays defective	Replace motor relays
	Combustion manager defective	Replace combustion manager (see Ch. 7.14)
Stepping motors		
Stepping motors are set to zero position several times, this is followed by lockout and error message: *F 60H, F 61H, F 68H, F 69H, F 6FH*	Stepping motor fixing screws are too tight	Loosen fixing screws
	Air damper or gas butterfly valve stepping motor is faulty	Replace stepping motor (see Ch. 7.8, 7.9, and 7.10)
F 66H…	Angle drive sluggish	Replace angle drive.
Insufficient air		
5 unsuccessful burner starts error message: *F 21H*	Pressure switch contact opens due to insufficient air pressure	Set air pressure switch correctly or replace it
	Pressure or negative pressure hoses defective	Replace hoses
	Burner fan soiled	Clean fan wheel and air-volute (see Ch. 7.6 and Ch. 7.7)
	Air pressure switch defective	Replace air pressure switch
Insufficient gas		
Burner start is interrupted after 1st solenoid valve is opened, low gas program starts Display: *16 01 59* → 2 mins. → *16 00 00* Burner restarts	No gas pressure available, e.g. ball valve closed	Open fuel shut off device. If there is insufficient gas for a prolonged time period, contact the gas supplier. **To interrupt the low gas program:** Remove and replace the 7-pole connection plug. Burner attempts to restart.
	Gas pressure switch does not switch	Replace gas pressure switch
Burner start is interrupted after 2nd solenoid valve is opened, low gas program starts	Gas pressure loss when 2nd solenoid valve opens due to fouled gas filter	Clean or replace filter insert (see Ch. 7.13)
Solenoid valve		
Signal lamp on valve signals: Valve does not open.	Valve coil defect	Replace valve coil (see Ch. 7.12)
Ignition		
No ignition audible Lockout Error message: *F 25H*	Ignition electrode gap incorrect	Adjust ignition electrode (see Ch. 7.5)
	Ignition electrode or ignition line have grounded/earthed	Rectify short to earth by replacing the defective parts.
	Ignition unit defective	Replace ignition unit
No voltage on combustion manager plug	Combustion manager defective	Replace combustion manager (See Ch. 7.14)

7 Servicing

7.1 Safety notes on servicing



Failure to carry out maintenance and service work properly can have severe consequences, including the loss of life. Pay close attention to the following safety notes.

Qualified personnel
Only qualified and experienced personnel must carry out maintenance and service work.

Before all maintenance and service work:
1. Electrically isolate the equipment
2. Close the ball valve
3. Remove the 7-pole connection plug from the appliance controller

After all maintenance and service work:
1. Function test with ball valve closed.
2. Check flue gas losses and CO_2 / O_2 / CO values.
3. Complete a test sheet.

Endangering operational safety
Maintenance work on the following individual components may only be carried out by the manufacturer or their appointed agent:
- Air damper stepping motor
- Gas butterfly valve stepping motor
- Flame sensor
- Combustion manager with operating and display panel
- Gas pressure switch
- Air pressure switch

Risk of explosion due to a gas leak
Take care when dismantling and assembling parts in the gas line to ensure they are correctly aligned, clean and in good condition, and that the fixing screws are correctly tightened.



Danger of getting burnt!
Some burner parts (e.g. flame tube, burner flange, electrodes, etc.) become hot during burner operation and should be allowed to cool prior to service work being carried out.

7.2 Servicing plan

Service interval
The operator should ensure that combustion plant is serviced at least
- once a year -
by an agent of the supplier or other suitably qualified person.

Test and clean
- Fan wheel and air inlet (see Ch. 7.6)
- Ignition equipment (see Ch. 7.5)
- Combustion head and diffuser (see Ch. 7.4)
- Filter insert (see Ch. 7.13)
- Air damper (see Ch. 7.11)
- Stepping motors / mechanisms (see Ch. 7.8 and 7.9)
- Flame sensor

Function test
- Operation of the burner with the sequence of operations (see Ch. 5.4)
- Ignition equipment
- Air pressure switch
- Gas pressure switch
- Flame monitoring
- Soundness test of gas valve trains (see CH. 4.6)
- Purging valve trains (when replacing; see CH. 5.2)

7.3 Mixing head - removal and refitting

Removing

1. Remove operating panel
2. Remove the flame sensor or ionisation plug ③
3. Remove the ignition cable ① from the ignition unit
4. Loosen screws ④
5. Remove mixing head ② from the housing (lightly rotate).

Refitting



Danger of explosion!
Misalignment of the seal ⑤ can result in a gas leak during burner operation.
When refitting the mixing head ensure the gas seal is clean and aligned correctly. Replace it if necessary. When commissioning the burner check the seal is sound with a leak detector.

To refit, reassemble in the reverse order.

Removal and refitting the mixing head

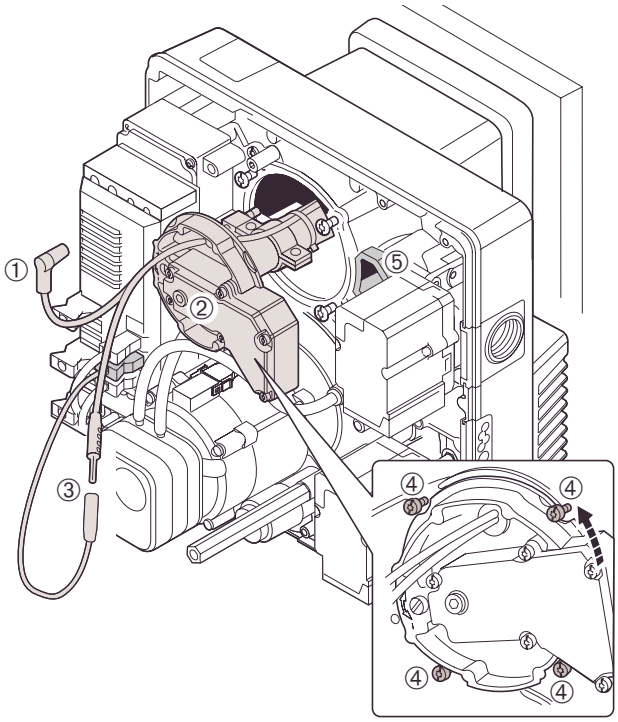

① Ignition cable
② Mixing head
③ Flame sensor plug
④ Kombi-Torx screw
⑤ Gas seal

7.4 Mixing head setting

The distance between the diffuser disc and the edge of the flame tube (dimension S_1) cannot be measured whilst it is mounted. To check, remove the mixing head and measure dimension L.

1. Remove the mixing head (see Ch. 7.3.)
2. Turn the setting screw ① until it is level with the mixing chamber housing (scale setting “0” or dimension X = 0).
3. Loosen screws ②.
4. After setting dimension L, fix the collar ③ with the lock nuts ②.

Setting dimensions

Dimension X	0 mm
Dimension L	278 mm
Dimension S_1	10 mm

Note: After loosening the lock nut check position of electrodes and gas drillings (control dimension K)

Control dimension K ____ 62·5 mm

Setting the mixing head

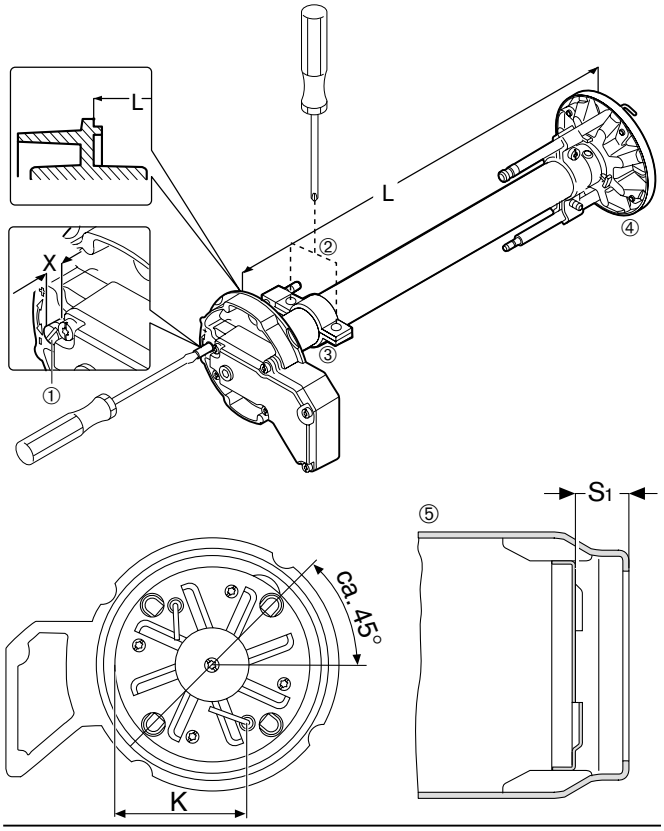

① Setting screw
② Lock nuts
③ Collar
④ Diffuser
⑤ Flame tube

7.5 Ignition electrode and sensor electrode setting

☞ For setting dimensions see illustration.
Remove the mixing head (see Ch. 7.3.)

If necessary, the setting of the sensor electrode can be adjusted to match site-specific conditions.

Setting dimension ignition electrode

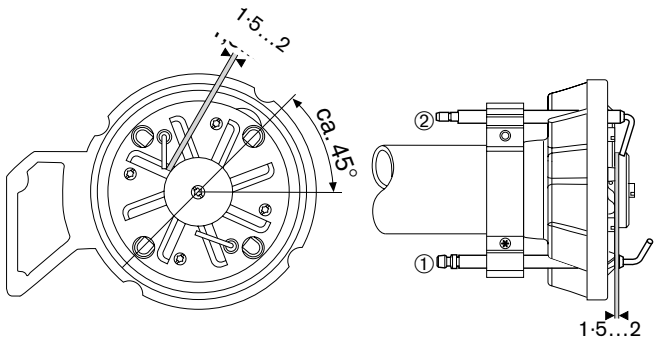

① Sensor electrode with 6.3 mm diameter plug
② Ignition electrode with 4.0 mm diameter plug

7.6 Service position of fan housing cover

The servicing position of the fan housing cover permits:
- Cleaning of the air channel and fan wheel
- Access to the air damper
- The removal and refitting of the fan and motor

Note If the burner has been mounted rotated through 180° it is not possible to put the fan housing cover in the servicing position.

1. Remove the display panel ①.
2. Remove mixing head (note Ch. 7.3).
3. Remove cover ② and disconnect small plugs
4. Remove cable plugs ③.
5. Disconnect plugs ④ from multifunction assembly.
6. Remove cover screws ⑤ whilst supporting fan housing.
7. Place fan housing cover onto support ⑥.

Reassemble the fan housing cover in reverse order.

Service position of fan housing cover

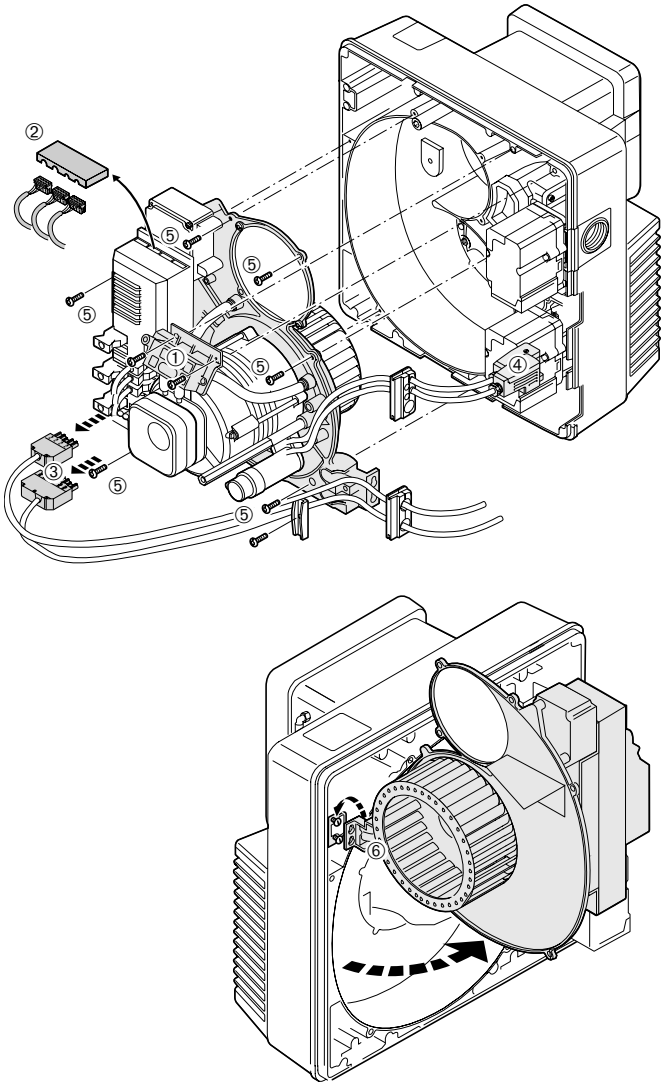

7.7 Removal and refitting fan wheel and fan motor

Removal

1. Put the fan housing cover in the servicing position (see Ch. 7.6.)
2. Loosen the threaded pin ①.
3. Remove the fan wheel.
4. Remove plugs No. 3 and No. 11.
5. Remove air pressure switch ②.
6. Supporting the motor in place, remove screws ③.
6. Remove the motor from the housing.

Refitting

Reassemble in the reverse order.

☞ Turn the fan wheel by hand to check freedom of movement.

Removal and refitting fan wheel and fan motor

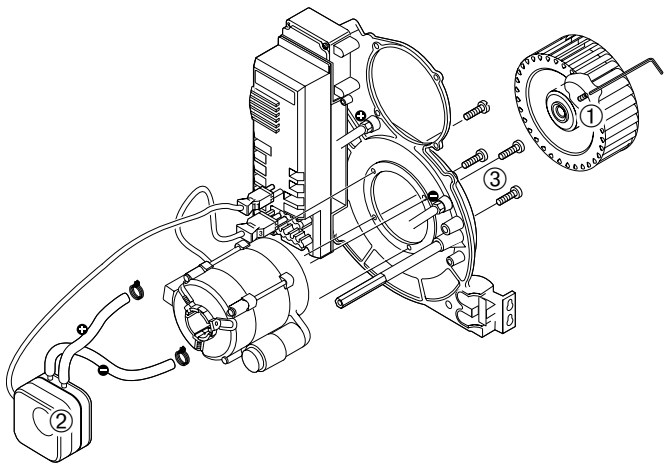

7.8 Removal and refitting stepping motor and angle drive of air damper

Removal

1. Remove the plug ① from combustion manager.
2. Remove the screws ②.
3. Remove stepping motor ③ and drive shaft ④.
   The air damper will open due to the spring relaxing.
4. Remove screws to remove frame ⑤.
5. Remove screws to remove angle drive ⑥.

Refitting



Damage to the stepping motor!
Do not turn the hub of the stepping motor, either by hand or with a tool.

1. Removing bridging plug No. 7
2. Connect plug ① to the combustion manager.
3. Switch the burner on.
   The combustion manager tests the stepping motor and drives to the reference point.
4. Switch the burner off and electrically isolate it.
5. Fit angle drive ⑥. The air damper must be fully open (90°) (see Ch. 7.11)
6. Fit frame ⑤ and tighten screws.
7. Insert the shaft ④ into the stepping motor.
8. Manually position indicator ⑦ of the angle drive to “0” and hold in this position.
9. Insert the shaft into the star-shaped groove in the indicator and fix stepping motor.
10. Replace bridging plug No. 7.

Removal and refitting stepping motor and angle drive

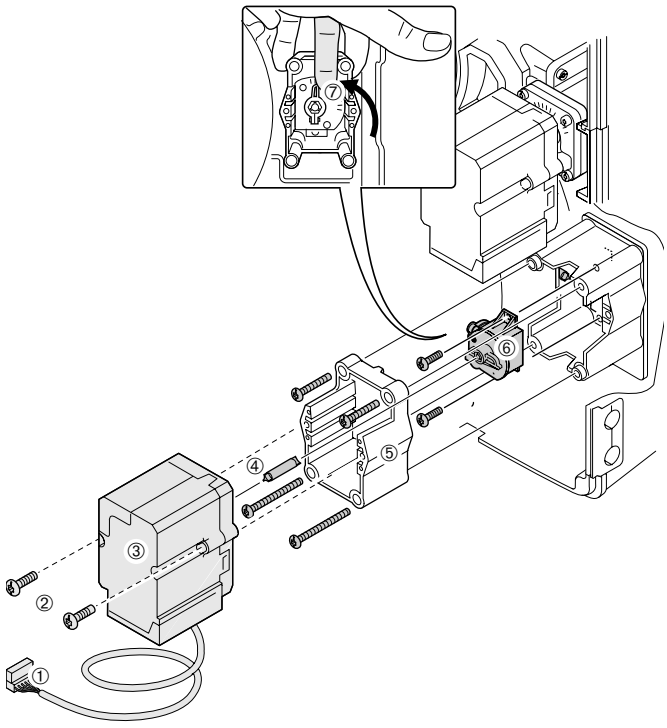

① Plug
② Kombi-Torx screw
③ Stepping motor
④ Drive shaft
⑤ Frame
⑥ Angle drive
⑦ Indicator with groove

7.9 Removal and refitting gas butterfly valve stepping motor

Removal

1. Remove plug ① from combustion manager.
2. Loosen screw ②.
3. Remove stepping motor

Refitting

ATTENTION

Damage to the stepping motor!
Do not turn the hub of the stepping motor, either by hand or with a tool.

1. Removing bridging plug No. 7.
2. Connect plug ① to the combustion manager.
3. Switch the burner on.
   The combustion manager tests the stepping motor and drives to the reference point.
4. Switch the burner off and electrically isolate it.
5. Offer up the stepping motor angled about 15° to the left, thus inserting the shaft ③ into the star-shaped groove, and reposition motor.
6. Replace and tighten screws ②.
7. Replace bridging plug No. 7.

Removing and refitting the gas butterfly valve stepping motor

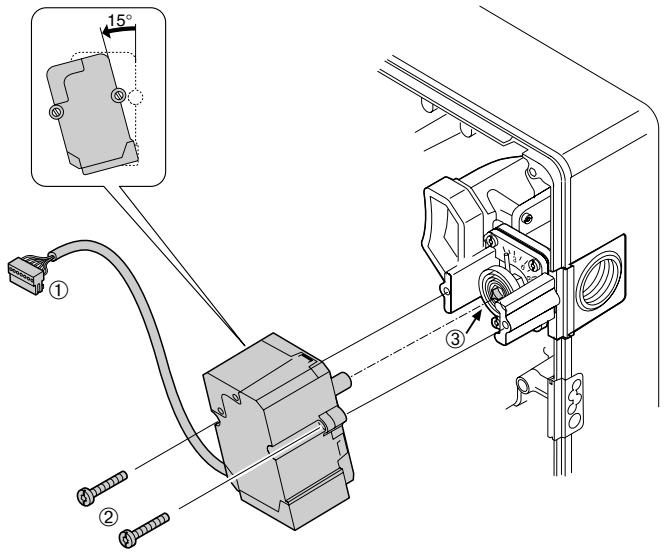

① Plug
② Kombi-Torx screw
③ Shaft

7.10 Removing and refitting gas butterfly valve

DANGER

Risk of explosion!
Uncontrolled gas leakage can lead to an explosive mixture of gas and air. If ignition source is present this can lead to an explosion. Maintain earth bonding!

Removing

1. Close gas ball valve.
2. Isolate burner from electrical supply.
3. Remove outlet flange ① from the multifunction assembly W-MF (see Ch. 4.5).
4. Unscrew nipple with W-MF flange from burner.
5. Remove mixing head (see Ch. 7.3).
6. Remove stepping motor (see Ch. 7.9)
7. Remove screws ②
8. Remove gas butterfly valve ③.

Refitting

DANGER

When refitting the mixing head ensure correct fitting and cleanliness of gasket ④.
If necessary replace gasket. During commissioning check soundness with leak detector.

1. Fit gas butterfly
2. Fit stepping motor (see Ch. 7.9)
3. Refit mixing head (note Ch. 7.3)
4. Refit double nipple
5. Fit outlet flange to multifunction assembly W-MF (note Ch. 4.5).
6. Carry out **soundness test** (note Ch. 4.6)
7. Switch on electrical supply.
8. Open gas ball valve.
9. Check combustion values, if necessary re-commission burner.

Removal and refitting gas butterfly valve

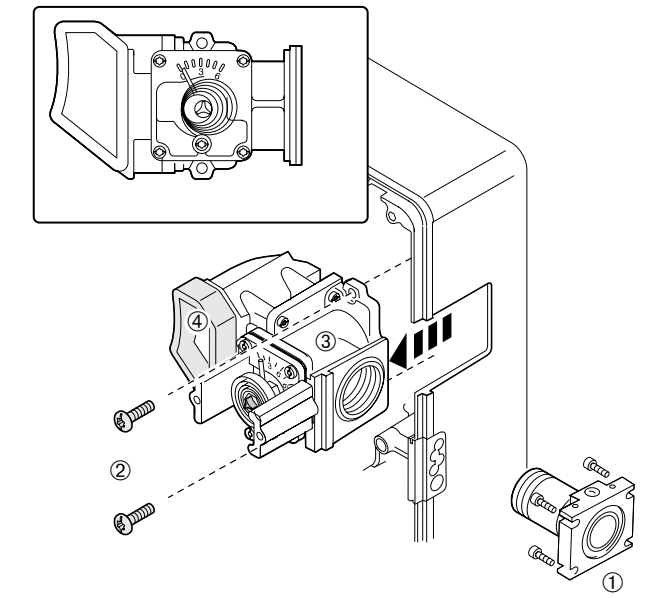

① Double nipple with W-FM flange
② Kombi-Torx screws
③ Gas butterfly
④ Seal

7.11 Removal and refitting air regulator housing

Removal
1. Close gas ball valve.
2. Isolate burner from electrical supply (see Ch. 4.7)
3. Remove outlet flange from the multifunction assembly W-MF (see Ch. 4.5)
4. Remove burner body from head flange on the appliance (see Ch. 4.4)
5. Unplug air damper stepping motor from combustion manager.
6. Remove screws ① and remove air intake housing.
7. Remove screws ② and remove air regulator housing.

Refitting
Refit following instructions in reverse.

Air regulator housing

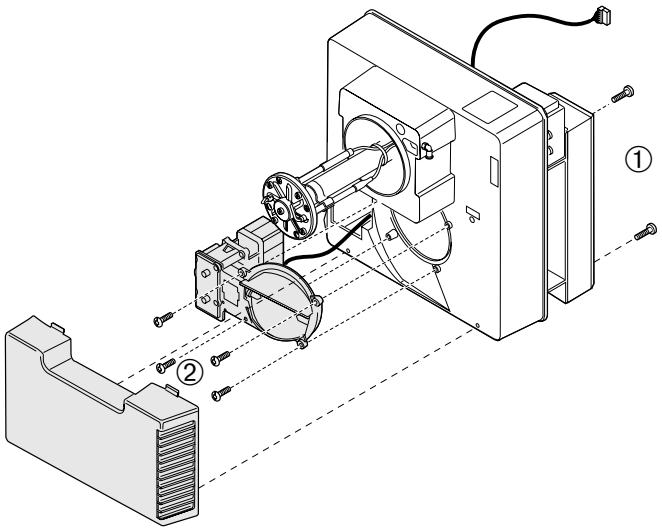

7.12 Removal and refitting coil on multifunction assembly (W-MF...)

Removal
1. Disconnect cable plug and unscrew top cap.
2. Remove coil by lifting.
   Pay close attention to solenoid type No. and voltage!

Refitting
Refit in reverse action.
Please note:
☞ When re-commissioning carry out function test.

Solenoid replacement on W-MF...

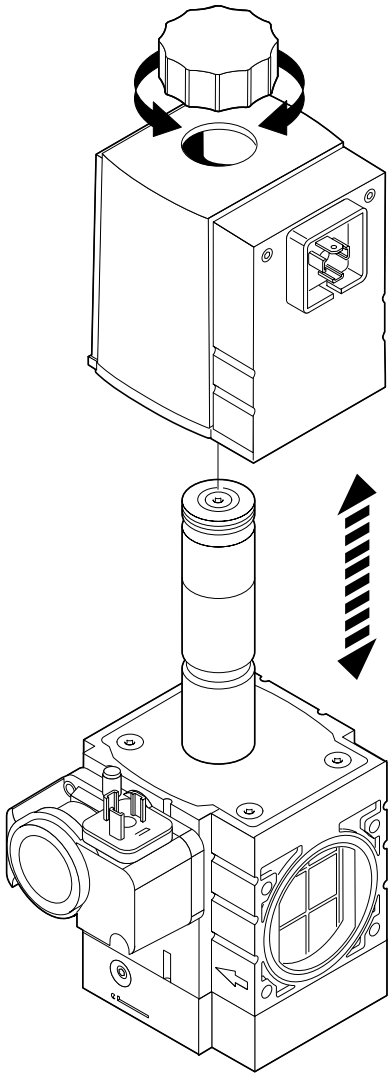

7.13 Removal and refitting gas filter on W-MF...

Removal
1. Close gas ball valve.
2. Remove screws.
3. Remove cover.
4. Remove filter insert.
5. Check gasket in cover, replace if necessary.

Refitting
1. Carefully fit new filter insert.
2. Fit gasket, ensuring correct location.
3. Replace cover.
4. Fit screws and tighten.
5. Carry out soundness test (see Ch. 4.6).
6. Vent valve train (see Ch. 5.2)

Removal and refitting filter insert

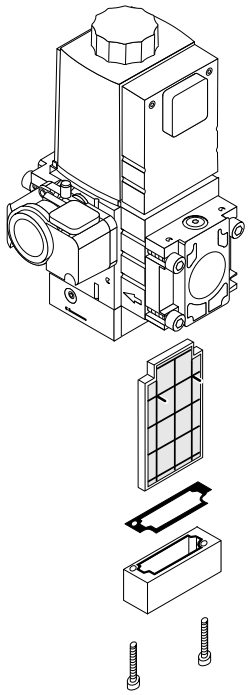

7.14 Combustion manager - removing and refitting

Removing
1. Disconnect all the plugs.
2. Loosen the screws.
3. Slide the combustion manager upwards and remove it from the housing.

Refitting
Reassemble in the reverse order.

Note If the combustion manager is changed, the burner has to be re-commissioned. The initial commissioning can be aided by taking the setting values of the original sticker, and re-trimming as required using an analyser.

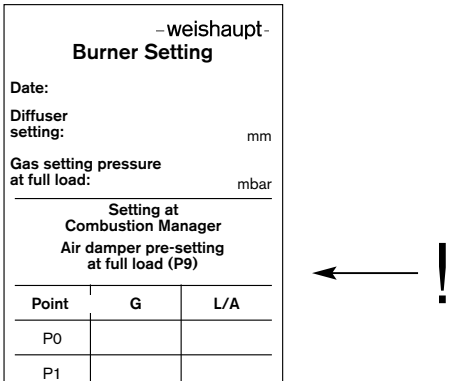

weishaupt
Burner Setting

Date:

Diffuser setting: mm

Gas setting pressure at full load: mbar

Setting at Combustion Manager

Air damper pre-setting at full load (P9)

Point	G	L/A
P0		
P1		

Removing and refitting the combustion manager

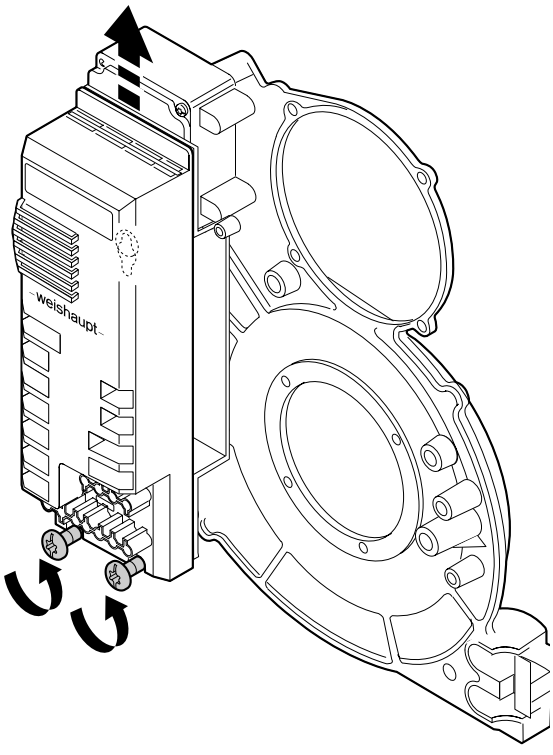

8 Technical data

8.1 Burner equipment

Burner type	Combustion manager	Motor	Stepping mot. Gas/air	Ignition unit	Gas press. switch	Air pressure switch	Display	Flame sensor
WG10…/1-C vers. ZM-LN	W-FM20	ECK 03/F-2/1 230V· 50Hz 2870 r.p.m. 0·13 kW, 1·0 A Cond. 4 µF	W-STE 4·5	W-ZG 01	GW50 A5/1	LGW 10 A2	AM20.02	Ionisation

8.2 Capacity graphs

Burner type WG10…/1-C
Combustion head WG10-C
Heat rating 25...110 kW

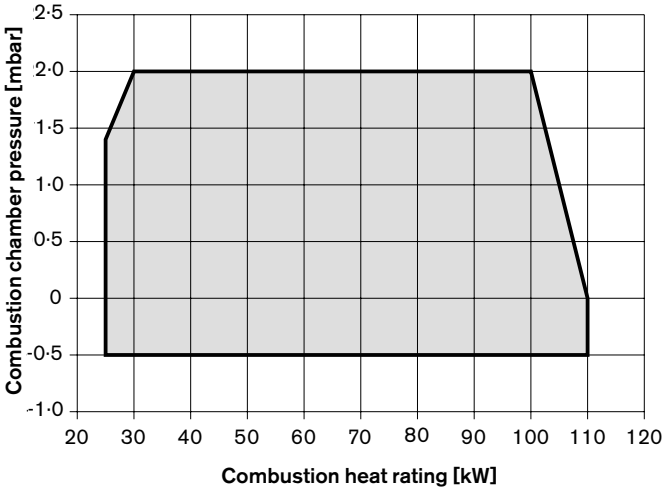

The capacity graph is in accordance with EN 676.
There is a rating reduction dependent on the altitude of the installation: approx. 1% per 100 m above sea level.

8.3 Permissible fuels

Natural gas E
Natural gas LL
Liquid petroleum gas B / P

8.4 Electrical data

WG10…/1-C, vers. ZM-LN

Mains voltage 230 V
Mains frequency 50/60 Hz
Consumption- Start 0·290 kW
- Operation 0·150 kW
Current intake 1·1 A
External fusing 10A slow

8.5 Permitted ambient conditions

Temperature	Humidity	Requirements for EMC	Low voltage guideline
In operation: -15°C to +40°C Transport / storage: -20 to +70°C	max. 80% rel. humidity no dew point	Guideline 89/336/EEC EN 50081-1 EN 50082-1	Guideline 73/23/EEC EN 60335

8.6 Dimensions

Dims in mm

l_1	l_2	l_3	l_4	b_1	b_2	b_3	h_1	h_2	h_3	h_4	h_5	d_1	d_2	d_3	d_4	Rp	$\alpha°$
349	140	31·5	115	330	164	165	353	93·5	25	270	165	108	M8	110	150-170	3/4”	45°

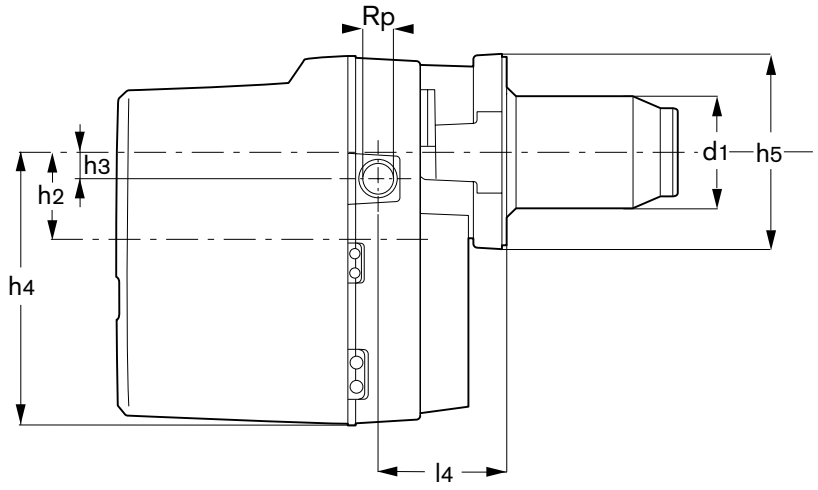

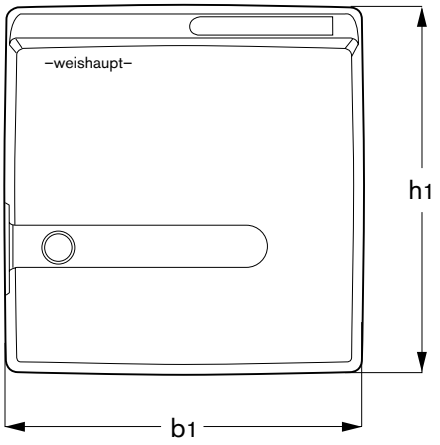

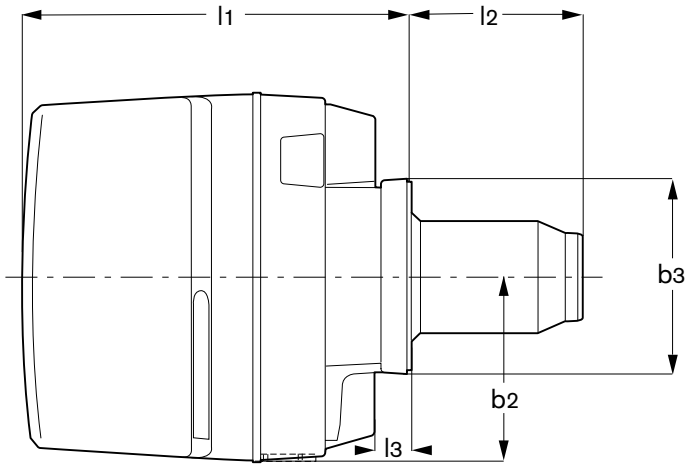

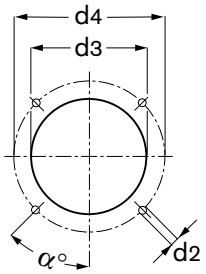

8.7 Valve train

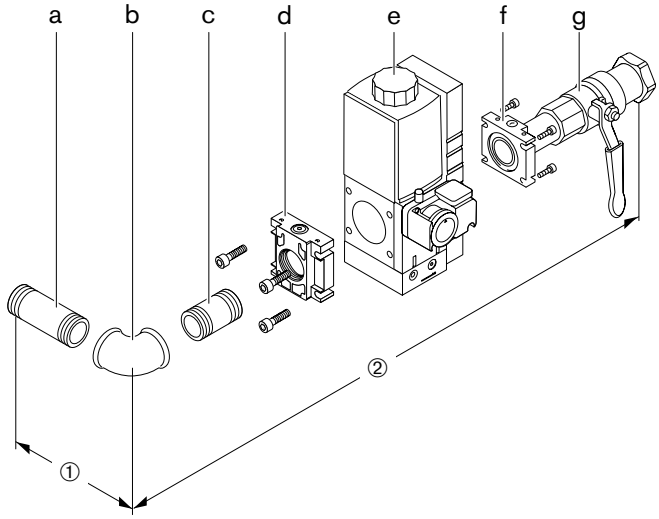

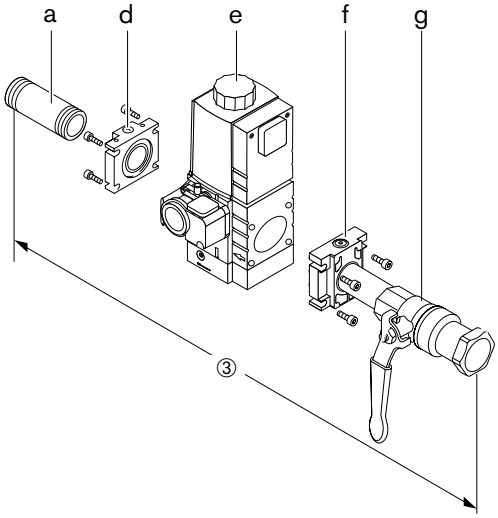

a Double nipple
b Elbow
c Double nipple
d W-MF flange
e Multifunction assembly W-MF
f W-MF flange
g Ball valve

Gas valve train (approx. dimensions in mm)

Type	①	②	③
W-MF507 (3/4")	70	350/338*	325/313*

* without thermal shut off device

Connection R	**Components a**	**b**	**c**	**d**	**e**	**f**	**g**
3/4" (W-MF507)	3/4" x 80	3/4"	3/4" x 50	3/4"	W-MF507	3/4"	3/4"

8.8 Weight

Burner _____approx. 13·5 kg

Valve train _____approx. 6 kg

Appendix

Calculation of gas throughput

To provide the correct thermal input to the heat exchanger, the required gas throughput must be determined beforehand.

Conversion from standard to operating conditions
The calorific value (H_i) of combustible gases is generally given in relation to the standard barometric conditions (0° C, 1013 mbar).

Example:

Height above sea level	=	500	m
Barometric air pressure $P_{Baro.}$ fromTab.	=	953	mbar
Gas pressure P_G at meter	=	20	mbar
Total pressure $P_{meas.}$ (B_o+P_G)	=	973	mbar
Gas temperature t_G	=	10	°C
Conversion factor f from Tab.	=	0·9266	
Appliance rating Q_N	=	95	kW
Efficiency η (assumed)	=	91	%
Calorific value H_i	=	10·35	kWh/m³

Normal volume(V_N):

$$V_N = \frac{Q_N}{\eta \cdot H_i} \qquad V_N = \frac{95}{0{\cdot}91 \cdot 10{\cdot}35} \qquad \rightarrow V_N \approx 10{\cdot}1\ m^3/h$$

Operating volume(V_B):

$$V_B = \frac{V_N}{f} \quad \text{or} \quad V_B = \frac{Q_N}{\eta \cdot H_{i,B}} \qquad V_B = \frac{10{\cdot}1}{0{\cdot}9266} \qquad \rightarrow V_B \approx 10{\cdot}9\ m^3/h$$

Measuring time in seconds for 1m³ of gas throughput

$$\text{Measuring time [s]} = \frac{3600 \cdot 1\ [m^3]}{V_B\ [m^3/h]}$$

Measuring time when gas meter reads 1m³:

$$\text{Measuring time} = \frac{3600}{10{\cdot}9} \qquad \rightarrow \text{Measuring time} \approx 330\ s$$

For two stage version calculate and check partial load in the same way.

Determination of factor f

Total pressure $P_{Baro.} + P_{Gas}$ [mbar] →

Gas temperature t_G [°C] ↓	950	956	962	967	973	979	985	991	997	1003	1009	1015	1021	1027	1033	1036
0	0·9378	0·9437	0·9497	0·9546	0·9605	0·9664	0·9724	0·9783	0·9842	0·9901	0·9961	1·0020	1·0079	1·0138	1·0197	1·0227
2	0·9310	0·9369	0·9427	0·9476	0·9535	0·9594	0·9653	0·9712	0·9770	0·9829	0·9888	0·9947	1·0006	1·0064	1·0123	1·0153
4	0·9243	0·9301	0·9359	0·9408	0·9466	0·9525	0·9583	0·9642	0·9700	0·9758	0·9817	0·9875	0·9933	0·9992	1·0050	1·0079
6	0·9176	0·9234	0·9292	0·9341	0·9399	0·9457	0·9514	0·9572	0·9630	0·9688	0·9746	0·9804	0·9862	0·9920	0·9978	1·0007
8	0·9111	0·9169	0·9226	0·9274	0·9332	0·9389	0·9447	0·9504	0·9562	0·9619	0·9677	0·9734	0·9792	0·9850	0·9907	0·9936
10	0·9047	0·9104	0·9161	0·9209	0·9266	0·9323	0·9380	0·9437	0·9494	0·9551	0·9609	0·9666	0·9723	0·9780	0·9837	0·9866
12	0·8983	0·9040	0·9097	0·9144	0·9201	0·9257	0·9314	0·9371	0·9428	0·9484	0·9541	0·9598	0·9655	0·9711	0·9768	0·9796
14	0·8921	0·8977	0·9033	0·9080	0·9137	0·9193	0·9249	0·9306	0·9362	0·9418	0·9475	0·9531	0·9587	0·9644	0·9700	0·9728
16	0·8859	0·8915	0·8971	0·9017	0·9073	0·9129	0·9185	0·9241	0·9297	0·9353	0·9409	0·9465	0·9521	0·9577	0·9633	0·9661
18	0·8798	0·8854	0·8909	0·8955	0·9011	0·9067	0·9122	0·9178	0·9233	0·9289	0·9344	0·9400	0·9456	0·9511	0·9567	0·9594
20	0·8738	0·8793	0·8848	0·8894	0·8949	0·9005	0·9060	0·9115	0·9170	0·9225	0·9281	0·9336	0·9391	0·9446	0·9501	0·9529
22	0·8679	0·8734	0·8788	0·8834	0·8889	0·8944	0·8998	0·9053	0·9108	0·9163	0·9218	0·9273	0·9327	0·9382	0·9437	0·9464
24	0·8620	0·8675	0·8729	0·8775	0·8829	0·8883	0·8938	0·8992	0·9047	0·9101	0·9156	0·9210	0·9265	0·9319	0·9373	0·9401

1 mbar = 1 hPa = 10·20 mm w.g. 1 mm w.g. = 0·0981 mbar = 0·0981 hPa

The figures in the table are based on the following simple formula:

$$f = \frac{P_{Baro} + P_G}{1013} \cdot \frac{273}{273 + t_G}$$

The moisture content of the gas is negligible and therefore is not considered in the table. The table allows for conversion factors in the low pressure range (up to > 100 mbar).
The factor can also be determined in the high pressure range according to the formula to the left.

Average yearly air pressure

Aver. geodetic height of install.	*from*		1	51	101	151	201	251	301	351	401	451	501	551	601	651	701
	to	0	50	100	150	200	250	300	350	400	450	500	550	600	650	700	750
Average yearly air pressure above sea level	*mbar*	1016	1013	1007	1001	995	989	983	977	971	965	959	953	947	942	936	930

Legend:
Q_N = Appliance rating [kW]
η = Efficiency [%]
H_i = Calorific value [kWh/m³]
$H_{i\text{-}B}$ = Operating calorific value [kWh/m³]
f = Conversion factor
$P_{Baro.}$ = Barometric pressure [mbar]
P_G = Gas pressure at meter [mbar]
t_G = Gas temperature at meter [°C]

For safe and economic operation of the plant, flue gas measurements are essential when commissioning.

Example of a simplified calculation for the required CO_2 value

Given that: $CO_{2\ max.} = 12\%$

At CO limit of approx 100ppm: $CO_{2\ measured} = 11{\cdot}5\%$

$$\text{Gives excess air } \lambda = \frac{CO_{2\ max.}}{CO_{2\ meas.}} = \frac{12}{11{\cdot}5} = 1{\cdot}04$$

To provide for a safe amount of excess air, increase excess air by 15%: 1.04 + 0.15 = 1.19

CO_2 value to be set with excess air $\lambda = 1.19$ and with $CO_{2\ max}$ potential of 12%.:

$$CO_2 = \frac{CO_{2\ max.}}{\lambda} = \frac{12}{1{\cdot}19} \approx 10{\cdot}1\ \%$$

The final CO content must not exceed 50 ppm.

Observe flue gas temperature
Flue gas temperature for nominal load (high-fire) is the result of burner setting at nominal loading.

The flue gas temperature at partial load (low-fire) is the result of the commissioned control range. The appliance manufacturer's instructions must be adhered to in respect the partial load (low-fire) setting. This might be 50 - 60% of nominal load setting, or even higher with an air-heater, whereas a condensing boiler may require the maximum available turndown within the burner's capacity range. Often the partial load (low-firing-rate) is shown on the appliance's data plate.

The flue gas installation should also be set out to protect against damage due to condensation (excluding acid-proof chimneys).

Determination of flue gas losses
The oxygen content of the undiluted flue gas and the difference between the flue gas temperature and the combustion air inlet temperature must be determined. The oxygen content and the flue gas temperature must be measured at the same time at one point. Instead of oxygen content, the carbon dioxide content of the flue gas can also be measured. The combustion air temperature is measured in the proximity of the burner air intake.

The flue gas losses are calculated when measuring the oxygen content according to the equation:

$$q_A = (t_A - t_L) \bullet \left(\frac{A_2}{21 - O_2} + B\right)$$

If the carbon dioxide content is measured instead of the oxygen content, the calculation is carried out according to the equation:

$$q_A = (t_A - t_L) \bullet \left(\frac{A_1}{CO_2} + B\right)$$

whereby:
q_A = flue gas losses in %
t_A = flue gas temperature in °C
t_L = combustion air temperature in °C
CO_2 = % of carbon dioxide in dry flue gas
O_2 = % of oxygen in dry flue gas

	Natural Gas	Liquid Petroleum Gas and LPG / Air mix
A_1 =	0·37	0·42
A_2 =	0·66	0·63
B =	0·009	0·08

Calorific values and max. CO_2 (guide values) of various types of gases

Gas type	Calorific value H_i MJ/m³	kWh/m³	CO_2 max. %
1st gas family			
Group A (Town Gas)	15·12…17·64	4·20…4·90	12…13
Group B (Grid Gas)	15·91…18·83	4·42…5·23	10
2nd gas family			
Group LL (Natural Gas)	28·48…36·40	7·91…10·11	11·5…11·7
Group E (Natural Gas)	33·91…42·70	9·42…11·86	11·8…12·5
3rd gas family			
Propane P	93·21	25·99	13·8
Butane B	123·81	34·30	14·1

For the various maximum CO_2 contents contact the gas supplier.

Notes

Notes

Weishaupt products and service

Max Weishaupt GmbH
D-88475 Schwendi
Tel. (0 73 53) 8 30
Fax (0 73 53) 8 33 58
Print No. 830**55**402, April 2002
Printed in Germany. We reserve the right to make changes.
All rights reserved.

– weishaupt –

Oil, gas and dual fuel burners types W and WG/WGL up to 570 kW
They are used mainly in houses and small buildings.
Advantages: fully automatic, reliable operation, individual components easily accessible, easy to service, quiet operation.

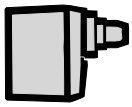

Oil, gas and dual fuel burners types Monarch R, G, GL, RGL – up to 10.900 kW
These are used on all types and sizes of central heating plant. The basic model which has proved successful over many years is the basis for a variety of versions. These burners have founded the outstanding reputation of Weishaupt products.

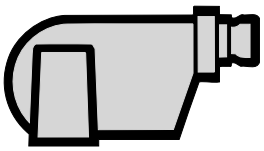

Oil, gas and dual fuel burners types WK – up to 17.500 kW
WK types are decidedly industrial burners.
Advantages: Built to the modular system, load dependent variable combustion head, sliding two stage or modulating operation, easy to service.

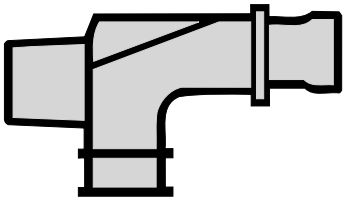

Weishaupt control panels, the proven complement to Weishaupt burners
Weishaupt burners and Weishaupt control panels form the ideal unit, a combination which has already proved successful in hundreds of thousands of combustion installations. The advantages: Cost saving during planning, installation, servicing and guarantee work. The responsibility belongs to one manufacturer.

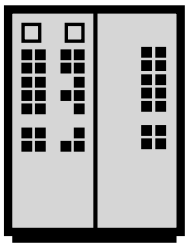

Weishaupt Thermo Unit / Weishaupt Thermo Gas.
These Units combine the technical innovations and operating efficiencies developed from over 1 million installations. Weishaupt Thermo Gas and Weishaupt Thermo Unit provide the ideals of complete heating centres for houses and appartments.

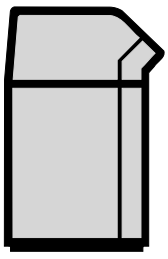

Product and service are the complete Weishaupt achievement
An extensive service organisation guarantees Weishaupt customers the greatest possible reliability. In addition our customers are looked after by heating firms who have been working with Weishaupt for many years.

