Промэлектроника
sales@prom-elec.com

Honeywell

S4565, S4575 AND S4585

IGNITION CONTROLS FOR COMBINED VALVE AND IGNITION SYSTEM

PRODUCTION HANDBOOK

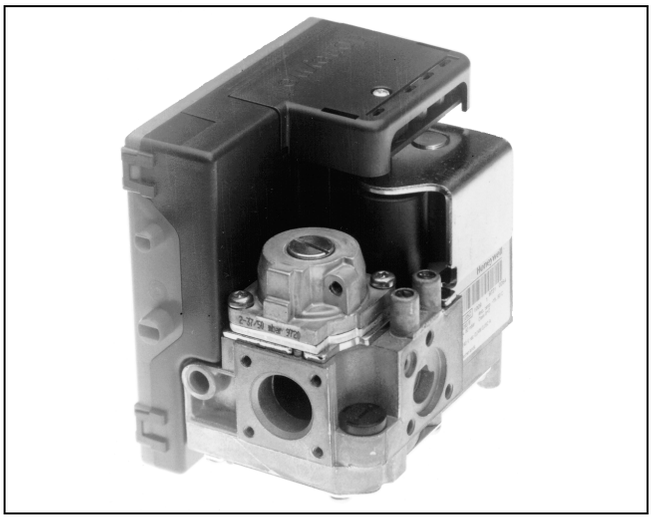

APPLICATION

The **C**ombined **V**alve and **I**gnition (**CVI**) system has been developed for application in gas fired domestic central heating boilers, combi boilers and warm air furnaces or water heater appliances with an automatic ignition system.

For this system, the S4565, S4575 and S4585 ignition controls are used in conjunction with the VK41.. series gas controls to provide and optimised safety sub-system for programmed safe light up and flame supervision of the main burner of the appliance

The combined system then provides programmed safe light up, flame supervision and regulation of gas flow to the main burner and/or pilot burner of the appliance.

NOTE: The **C**ombined **V**alve and **I**gnition (**CVI**) product concept consists of a specially designed gas valve family in combination with a dedicated ignition controls family. This product handbook describes the CVI ignition controls family S4565, S4575 and S4585 for use in combination with the CVI gas control family VK41.. For details of the CVI gas controls please refer to Product Handbook EN2R-9004. For an up-to-date copy please contact your nearest Honeywell office. For glossary of terms, abbrevations and symbols see document EN2R-9039

Subject to change without notice. All rights reserved

ПРОМЭЛЕКТРОНИКА / sales@prom-elec.com

CONTENTS

General — Page

Description 3
Features 4
Dimensional drawing housing 5
Dimensional drawing “old style” housing 6
Accessories for degree of protection IP 20, IP 40, IP X4, IP 44 7
Assembling of IP X4/44 housing 8
Application S4565/S4575/S4585 ignition controls 9

S4565 ignition controls

Specifications S4565A, B ,P, Q 10
System operation S4565A, B, P, Q 12
Specifications S4565C, D, R, T 14
System operation S4565C, D, R, T 16
Specifications S4565AD, BD, CD, DD, PD, QD, RD, TD “1000” series 18
System operation S4565AD, BD, CD, DD, PD, QD, RD, TD “1000” series 22
Specifications S4565AD, BD, CD, DD, PD, QD, RD, SD, TD “2000” series 25
System operation S4565AD, BD, CD, DD, PD, QD, RD, SD, TD “2000” series 30
Specifications S4565AF, BF, CF, DF, PF, QF, RF, TF 33
System operation S4565AF, BF, CF, DF, EF, PF, QF, RF, TF 35
Application note S4565BF with second main valve control 38
Application note S4565DF, TF with external main burner interrupt 39
Specifications S4565PV, QV, RV, TV 42
System operation S4565PV, QV, RV, TV 45

S4575 ignition controls

Specifications S4575A, B, P, Q 50
System operation S4575A, B, P, Q 52

S4585 ignition controls

Specifications S4585D 54
System operation S4585D 57

Various

General considerations 59

Installation

EMC guidelines 60
Electrical connections and wiring 61
Quality assurance statement 62
Standards and approvals 63
Ordering information 64
Overview ignition controls 65
Replacement parts and accessories 66
Cable assemblies 66

DESCRIPTION

Valves
The **C**ombined **V**alve and **I**gnition (**CVI**) system controls and performs all the functions required for safe ignition, flame supervision and for safely regulating the gas flow to the pilot and/or main burner.

The **CVI** consists of a gas valve of the VK41.. series and a dedicated ignition control of the series S4565, S4575 and S4585 which is connected directly on to it.

Ignition control
The S4565, S4575 or S4585 220/240 Vac series ignition controls can be directly electrically connected to a VK41.. series gas control. (S4575 can also be rated 110 ... 120Vac)

The S4565/S4575 ignition controls are not intended for direct exposure to flame envelope.

S4565, S4575 and S4585 ignition controls give excellent performance and a high reliability standard. There are versions available for different ignition systems:

The S4565/S4575 ignition controls are approved on the North American standard ANSI Z21.20 Automatic Ignition Systems.

S4565, S4575 and S4585 systems function in accordance with EN 298.

- **S4565**
  Direct **B**urner **I**gnition (**DBI**) or **I**ntermittent **P**ilot ignition (**IP**) with a defined safety time for applications with or without fan, with flame detection, volatile or non volatile lock out, optional remote reset, fixed waiting times and in case of flame failure recycling of the full start up sequence.
- **S4575**
  Hot **S**urface **I**gnition (**HSI**) with a defined safety time for applications with or without fan, with flame detection, volatile or non volatile lock out, optional remote reset, fixed waiting times and in case of flame failure recycling of the full start up sequence.
- **S4585**
  Intermittent **P**ilot ignition (**IP**) for atmospheric or fan assisted applications with the so called ”wild pilot system” without safety time for ignition, with flame detection on the pilot flame. Wild pilot system means a safety $T_s + \infty$ and is applicable for pilot burners up to 250 Watt

Intermittent **P**ilot ignition (**IP**) for atmospheric or fan assisted applications with the so called ”wild pilot system” ***** without safety time for ignition and flame detection on the pilot flame**.** The performance and the construction of the ignition control is optimized and dedicated to the VK41.. series gas controls.

NOTE: S4565SD is not an ignition control but an ignition circuit and rectifier only

FEATURES

General

- All burner control safety functions concentrated in one reliable and optimized system.
- Specially designed to provide the optimum system solution in gas appliances with a DBI or IP system to light the main burner.
- Both gas control and ignition control incorporate time proven design concepts assuring reliability.
- Easy assembly of ignition control on gas control by plugging it on from the top.
- Mounting orientation may be within 90° in any direction from the electric on/off operator upright position.

Ignition control

- Hybrid technology for high reliability.
- Flame supervision.
- Built-in 2.5 ... 60 Hz ignition.
- Internal or external reset and alarm.
- Accurate safety timer.

• Supply voltages of 220/230 ... 240 V 50/60 Hz in a single product. (S4575 can also be rated 110 ... 120Vac)

- Full operating sequence after flame loss.
- Extended spark ignition.
- Optional phase neutral independent operation, flame sensing independent of safety ground potential for S4565AD ... TD “2000” series and S4575.
- Safety time triggered by Air Pressure Switch (APS) for S4565AD ... TD “2000” series.
- Optional safe separation flame relay output or opto coupler.
- Optional main burner interrupt for S4565BF, DF, QF, TF.
- Volatile or non volatile lock-out according to EN 298.
- EMC filter optional.
- Protective impedance flame rod.
- Under voltage protection.
- Flame relay option.
- Option of separate power supply and heat demand input.
- Optional flame retarding housing (UL 94-V0)

Electrical connection options

- Connection to the gas control is made entirely by plugging the ignition control on.
- Electric connections are positioned on top and are made by a multiple plug-in connector (IP 20 enclosure if side connections are accessible).
- The housing can receive a cover for strain relief in order to have an IP 30 or an IP 40 enclosure,(if side connections are accessible). When the cover is applied in combination with the cable seal grommet, sleeves and gasket the enclosure is IP X4 (IP 44 if side connections are accessible)
- Ignition and flame detection connections are at the outlet end of the housing.
- Flame detection is accessible.
- Volt free relay of S4575 is accessible.
- Ignition connection is accessible if f_s t 25 Hz and ignition and flame sensing is separate.
- Ignition connection AMP 2.8 x 0.5 mm.
- Flame detection connection AMP 4.8 x 0.8 mm in case of separate ignition and flame sensing.

DIMENSIONAL DRAWING HOUSING

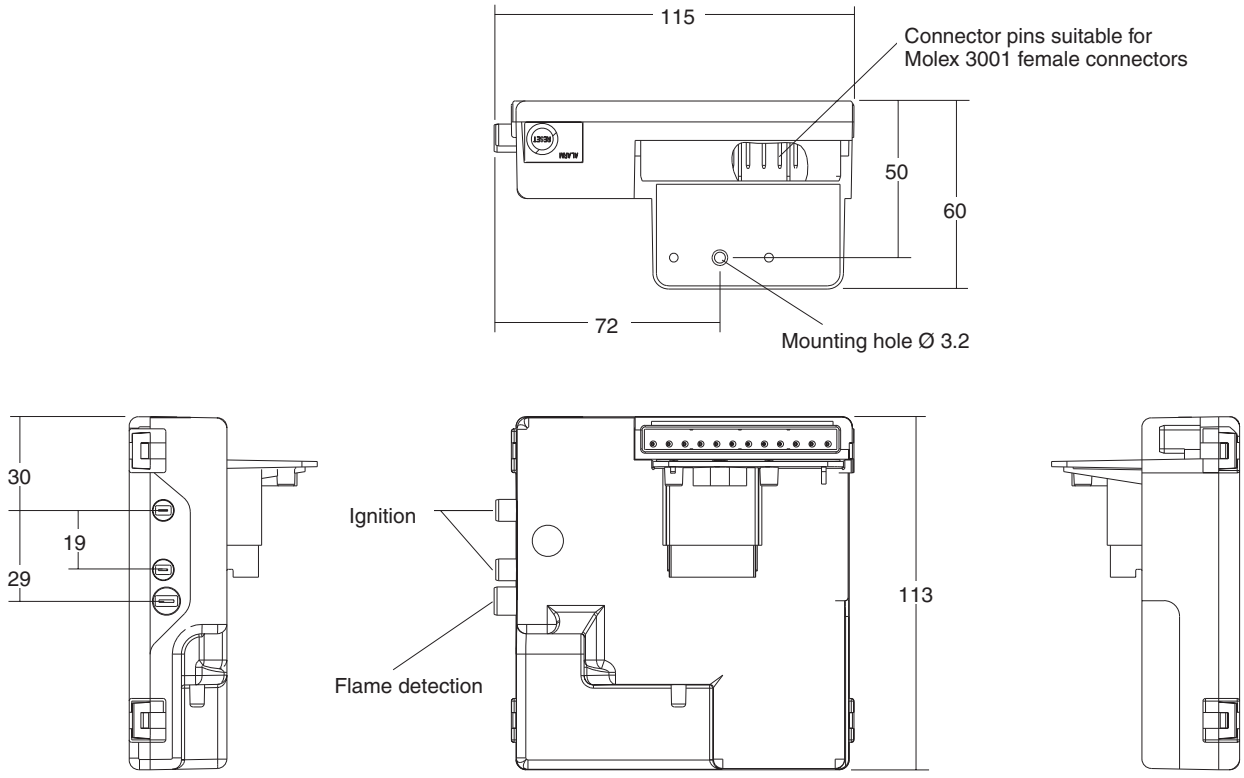

Fig. 1. Dimensional drawing housing in mm

DIMENSIONAL DRAWING “OLD STYLE” HOUSING

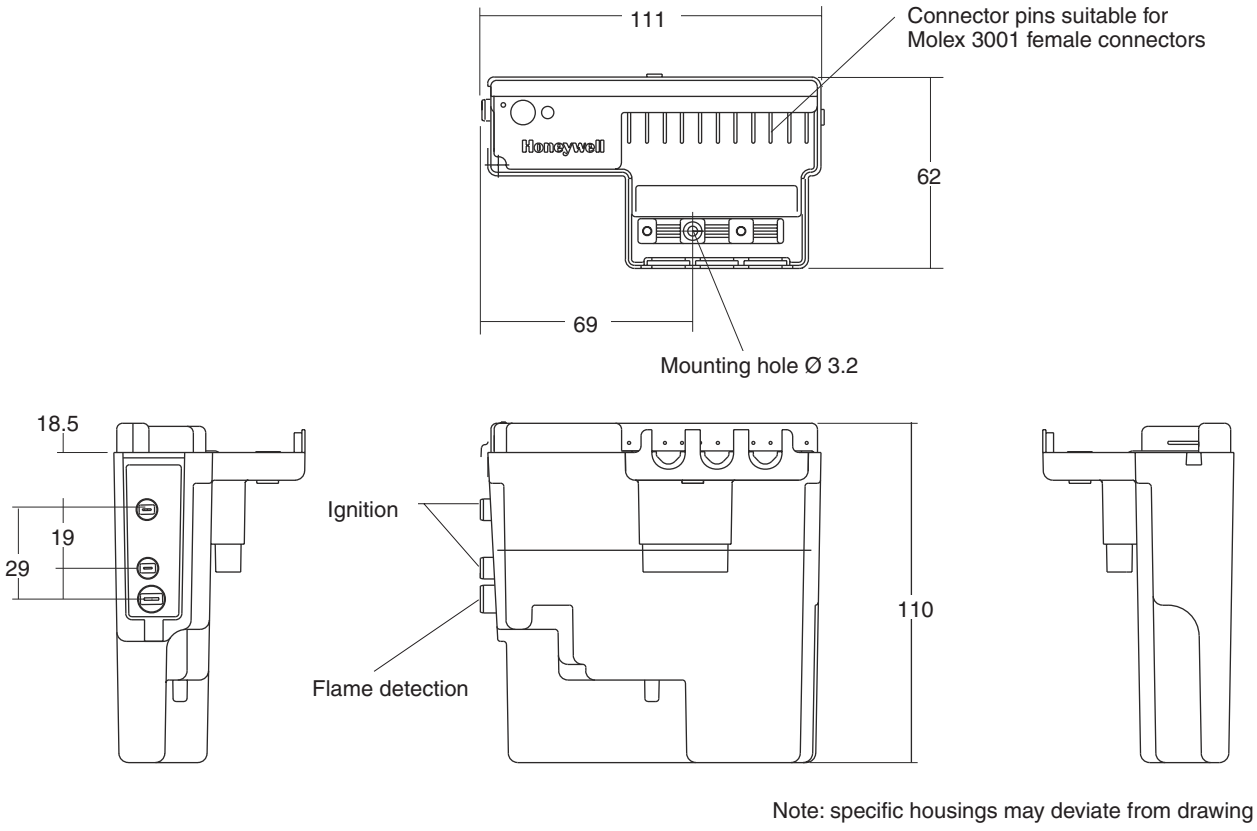

Note: specific housings may deviate from drawing

Fig. 2. Dimensional drawing “old style” housing in mm (do not use for new designs)

ACCESSORIES FOR DEGREE OF PROTECTION IP 20, IP 40, IP X4, IP 44

See also Replacement parts and Accessories on page 66.

		IP 00	IP 20	IP 40	IP X4	IP 44
Optional strain relief Order number: 45900442-007 or- 011: 45900440-001 (screws included)	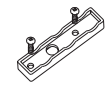					
Cover set with separate strain relief Order number: 45900440-001 (screws included) Order number: 45900431-005 Order number: 45900431-007 (screw included)	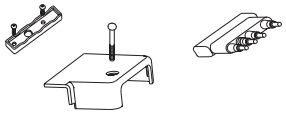		Choose one cover set 1)	Choose one cover set 1)	Choose one cover set 1)	Choose one cover set 1)
Cover set with integrated strain relief Order number: 45900431-004 (screw included)	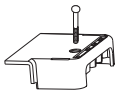					
Cover set with integrated strain relief, flame retarding in accordance with UL 94 V0. Order number: 45900431-005 (screw included)	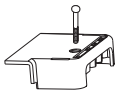					
Special housing for IP X4/44 **See O.S. card** **Color: grey and red** **Cable grommet** Order number: 45900442-008 **Sleeve** Order number: 45900442-003 or- 006 **Gasket** Order number: 45900442-007 or- 011	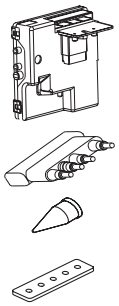				Choose one set (housing with accessoiries) 2)	Choose one set (housing with accessoiries) 2)
Special housing for IP X4/44, flame retarding in accordance with UL 94 V0 **See O.S. card** **Color: black** **Cable grommet** Order number: 45900442-008 **Sleeve** Order number: 45900442-003 or- 006 **Gasket** Order number: 45900442-007 or- 011	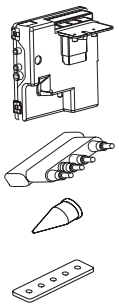					
Additional means for electrical protection of side outlets	To be provided by the appliance manufacturer		Use 3)	Use 3)		Use 3)

1) For IP 20 the cable grommet may be left out.
2) Classification valid after correct installation of wires.
3) Only if the spark frequency is larger than 25 Hz or in case of combined ignition and flame sensing or if the side connections have DC or AC output then additional protection against electrical shock shall be provided for these connections by the application manufacturer since in such case the side connections must be considered as hazardous live parts.

ASSEMBLING OF IP X4/44 HOUSING

Assembling of the cable connector(s) and cover (see Fig. 3. and Fig. 5.)

- Use cable with Ø 5 ... Ø 7 mm.
- Strip length cable: 15 mm
- Grommet inlet nunmbers1, 2, 4 applicable for cable with Ø 5 ... Ø 7 mm.
- Grommet inlet number 3 applicable for cable with Ø 4 ... Ø 7 mm.
- Mount the connector(s) and bring the cable grommet in position over the cables and connector.

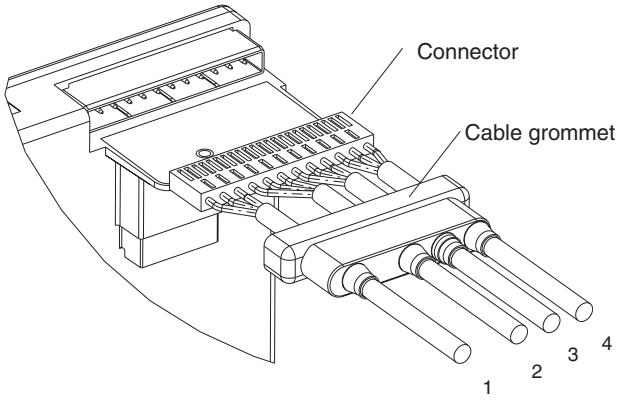

Fig. 3.

Assembly of strain relief for IP X4/44 protection (see Fig. 4. and Fig. 5.)

Position the cover on the ignition control Then, when holding the cover down (in direction A) rotate it to mount the cable(s) in the strain relief (in direction B).

Place the gasket on the pins of the gas control and finally fix the whole assembly (ignition control and cover) with a screw on the gas control wit a torque of 40 Ncm max.

Use sleeves to connect the flame sensing wire and sparking connection(s).

In case the spark plug connections are not accessible, additional means for electrical protection need to be provided by the boiler manufacturer if IP 44 is needed. The spark plug connections must not be removable without the use of a tool.

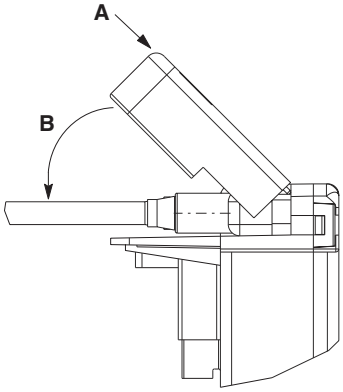

Fig. 4.

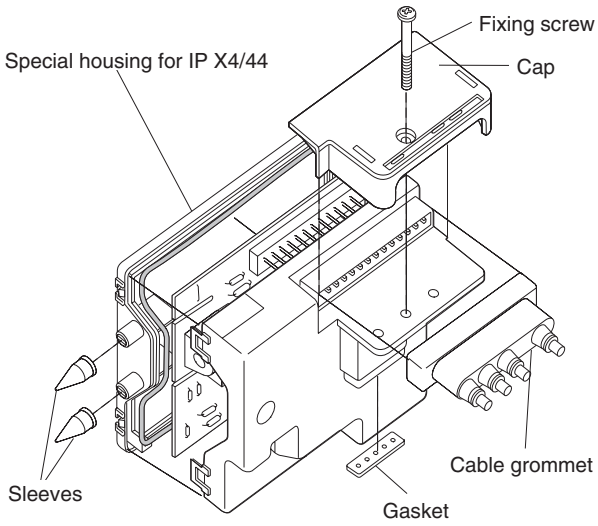

Fig. 5.

APPLICATION

The S4565, S4575 and S4585 series ignition controls have been specially developed for application in gas fired domestic appliances.
The S4565, S4575 and S4585 series ignition controls are used in conjuction with the VK41.. series gas controls to provide and optimised safety sub-system for programmed safe light-up and flame supervision of the main burner of the appliance.

In S4565 series there are versions available for both **Direct Burner Ignition (DBI)** and **Intermittent Pilot (IP)** ignition systems with a defined safety ignition time.

The S4575 series are suitable for **Hot Surface Ignitors**.
The S4585 series can be used for appliances with **"Wild Pilot" Intermittent Pilot systems.** (Wild pilot means a safety time $T_s = \infty$ and is applicable for pilot burners up to 250 Watt.)

SPECIFICATIONS S4565A, B ,P, Q

Model
Suffix A: atmospheric, direct burner ignition
Suffix B: atmospheric, direct burner ignition, flame relay output
Suffix P: as A except volatile lock-out
Suffix Q as B except volatile lock-out

Supply voltage
220 ... 240 Vac, 50/60 Hz (-15%, +10%)

Power consumption
4 VA

Humidity
90% RH max. at 40°C non condensing

Storage
- 30 ... 70°C

Ambient temperature
-15 ... 60°C

Electrical rating (see also note 3.)

Alarm:	220 ... 240 Vac, 50/60Hz, 1 A, cos φ > 0.6 or max 1 mA
Flame relay contact:	220 ... 240 Vac, 50/60Hz, 1 A, cos φ > 0.6
Flame opto coupler:	+5 V, 10 kΩ

Electrical connection

High voltage spark:	2.8 x 0.5 mm spade terminal
Flame sensing:	4.8 x 0.8 mm spade terminal
PCB connectors:	Molex 3003 series suitable for Molex 3001 female cable connector

Housing (degree of protection)
See:

accessories for degree of protection page 7..
replacement parts and accessories page 66..

Timing (depending on O.S. number)

Self check time (T_c):	1.5 s
Waiting time (T_w):	0 ...30 s
Safety time (T_s):	3.5 ... 55 s
Extended spark ignition time (T_x):	0 ... T_s max.

Flame sensing

Min flame current:	0.9 μA
Response time on:	> 0.2 s
Response time off(T_{FR}):	< 1 s (optionally other values available)

Ignition

Spark voltage:	>12 kV at 40 pF load (depending on O.S. number)
Spark energy:	3 ... 15 μAs
Repetition rate:	2.5 ... 60 Hz (depending on O.S. number)
Max. spark gap:	3.5 mm

Length flame sensing cable
1 m max.

Length ignition cable
0.5 m max.

Length of wiring for external components
1 m max.

Remark
Optional integrated flame relay available with safe separation or opto coupler with safe separation.

N.C. contact of flame relay has no safe separation.

⚠ WARNING

Opto coupler interface needs a debounce time > 20 ms in order to prevent noise caused by transients on mains.

CONNECTION DIAGRAM S4565A, B ,P, Q

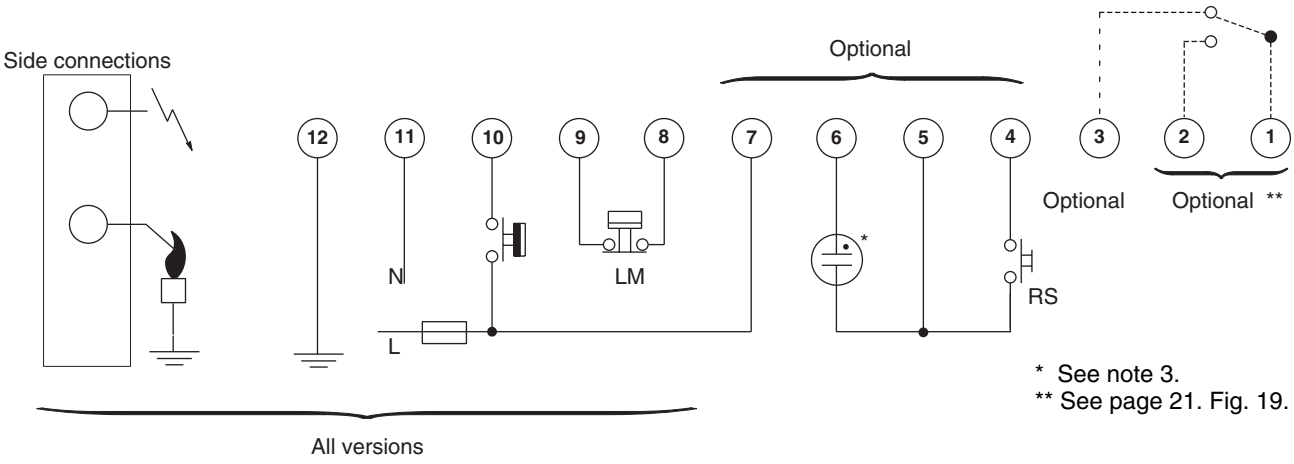

Fig. 6. Connection diagram S4565A, B, P and Q

General

Lock-out reset
The S4565A, B, P and Q ignition controls can be reset by either depressing the internal/external reset button (suffix A and B) or by interrupting the permanent live connection (suffix P and Q).
If a first reset is not succesful, wait at least 15 seconds before attempting another one.

NOTE 1.: When first starting, the ignition control can be in the lock-out condition; depress the reset button to free the ignition control. After a manual reset an extended prepurge/waiting time will occur.

NOTE 2.: If during normal use the reset button is pressed, the gas valves drop out and the ignition control starts a new sequence after releasing the reset button.

NOTE 3.: If permanent alarm output: neon indicator with integral resistor >150 kΩ (max 1 mA)

NOTE 4.: If an automatic return high limit thermostat is used, the high limit switch in the application needs a longer return time than the trial for ignition time of the ignition control. This in order to provide non volatile lock out.

Suffix A, B, P and Q (see Fig. 7.)
When there is a call for heat a self check period (Tc) plus waiting period (T_w) elapse before built-in igniter and gas valve are switched on.
The ignition spark ignites gas and resulting flame is detected by the flame rod.
Ignition is switched off after extended ignition time and flame establishment.
If flame is not established within the safety time (T_s), the ignition control locks out.
If the flame is lost during normal run, the ignition control repeats the start sequence.

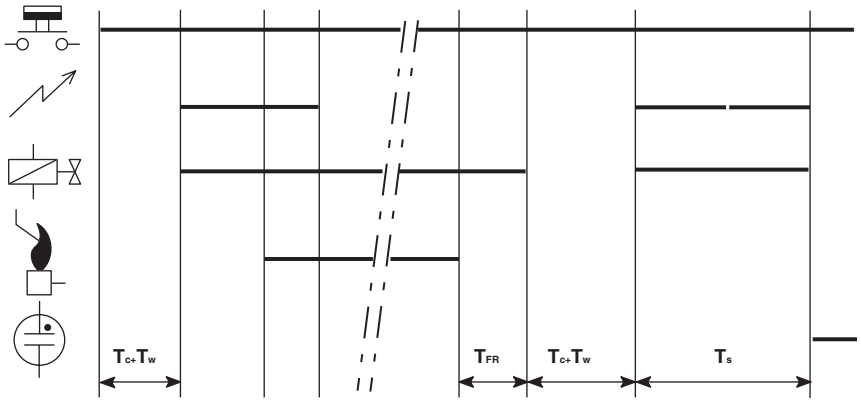

Fig. 7. Timing diagram S4565A, B, P and Q

Model
Suffix C: fan assisted, direct burner ignition
Suffix D: fan assisted, intermittent pilot burner ignition including safety timer
Suffix R: as C except volatile lock-out
Suffix T: as D except volatile lock-out

Supply voltage
220 ... 240 Vac, 50/60Hz (-15%, +10%)

Power consumption
4 VA

Humidity
90% RH max. at 40°C

Ambient temperature
-15 ... 60°C

Electrical rating (see also note 7.)

Alarm:	220 ... 240 Vac, 50/60Hz, 1 A, cos φ > 0.6 or max 1 mA
Fan:	220 ... 240 Vac, 50/60Hz, 1 A, cos φ > 0.6
LPG outdoor valve:	220 ... 240 Vac, 50/60Hz, 1 A, cos φ > 0.6
External ignition transformer:	220 ... 240 Vac, 50/60Hz, 1 A, cos φ > 0.6

Electrical connection

High voltage spark:	2.8 x 0.5 mm spade terminal
Optional:	External mains voltage ignition transformer 2.8 x 0.5 mm spade terminal
Flame sensing:	4.8 x 0.8 mm spade terminal or 2.8 x 0.5 mm spade terminal for combined high voltage spark/flame sensing
PCB connectors:	Molex 3003 series suitable for Molex 3001 female cable connector

Housing (degree of protection)
See:
accessories for degree of protection page 7..
replacement parts and accessories page 66..

Timing (depending on O.S. number)

Self check time (T_c):	0, 1.5 or 2 s
Prepurge time (T_p):	0 ... 30 s
Safety time (T_s):	3.5 ...55 s
Extended spark ignition time and stabilisation time:	0 ... T_s (depending on elaps of safety time)

Flame sensing

Min flame current:	0.9 μA
Response time on:	> 0.2 s
Response time off (T_{FR}):	< 1 s (optionally other values available)

Ignition

Spark voltage:	> 12 kV at 40 pF load (depending on O.S. number)
Spark energy:	3 ... 15 μAs
Repetition rate:	2.5 ... 60 Hz (depending on O.S. number)
Max spark gap:	3.5 mm

Length flame sensing cable
1 m max.

Length ignition cable
0.5 m max.

Length of wiring for external components
1 m max.

CONNECTION DIAGRAM S4565C, D, R, T

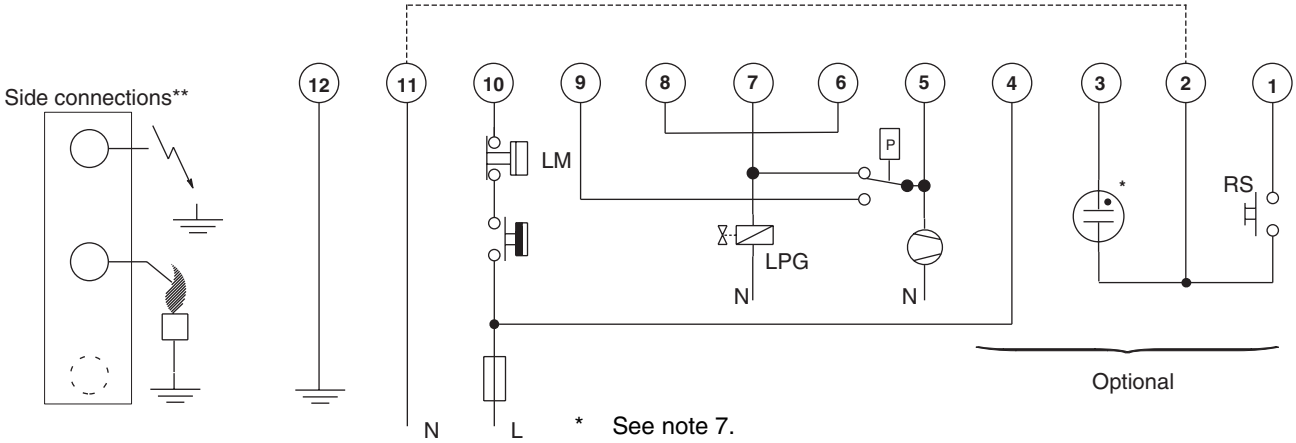

* See note 7.
** Alternative side connection for models with combined flame detection/high voltage. See page 56. Fig. 71.

Fig. 8. Connection diagram S4565C, D, R and T

General

Lock-out reset
The S4565C, D, R, T ignition controls can be reset by either depressing the internal/external reset button (suffix C and D) or by interrupting the permanent life (suffix R, and T).
If a first reset is not succesful, wait at least 15 seconds before attempting another one.

NOTE 5.: When first starting, the ignition control can be in the lock-out condition, depress the reset button to free the ignition control. After a reset an extended waiting time will occur.

NOTE 6.: If during normal use the reset button is pressed, the gas valves close and the ignition control starts a new sequence after releasing the reset button.

NOTE 7.: If permanent alarm output:neon indicator with integral resistor >150 kΩ (max 1 mA)

Suffix C and R (see Fig. 9.)
When there is a call for heat the fan starts running through the no air position of the air proving switch.
If an external LPG valve is connected, this will be energized.
When sufficient air flow is proven by the air proving switch, a self check period (T_c) plus a prepurge period (T_p) elapse before the gas valve and built-in ignition or external ignition transformer (optional) are switched on.
The ignition spark ignites gas and resulting flame is detected by the flame rod.
Internal or external ignition is switched off.
After flame establishment a predetermined, extended ignition time can be included.
If flame is not established within the safety time (T_s), the ignition control locks out.
If the flame is lost during normal run, the ignition control repeats the start sequence with prepurge.
If no air is proven by the air proving switch within the prepurge time (T_p), the ignition control stays in waiting mode with fan running.

Suffix D and T (see Fig. 10.)
When there is a call for heat the fan starts running through the no air position of the air proving switch.
If an external LPG valve is connected, this will be energized.
When sufficient air flow is proven by the air proving switch, a a self check period (T_c) plus a prepurge period (T_p) elapse before the pilot gas valve and built-in ignition or external ignition transformer (optional) are switched on.
The ignition spark ignites pilot gas and resulting flame is detected by the flame rod.
Internal or external ignition is switched off.
After flame establishment a predetermined, extended ignition time can be included.
If flame is not established within the safety time (T_s), the ignition control locks-out.
If the flame is lost during normal run, the ignition control repeats start sequence at prepurge.
If no air is proven by the air proving switch within the prepurge time (T_p), the ignition control stays in waiting mode with fan running.

⚠ WARNING

Do not interchange air proving switch wiring in order to prevent malfunctioning

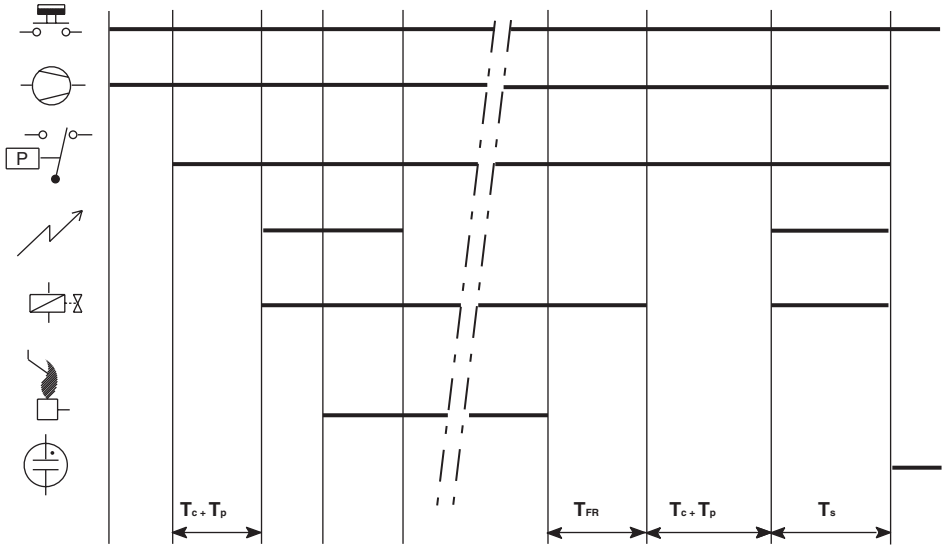

Fig. 9. Timing diagram S4565C and R

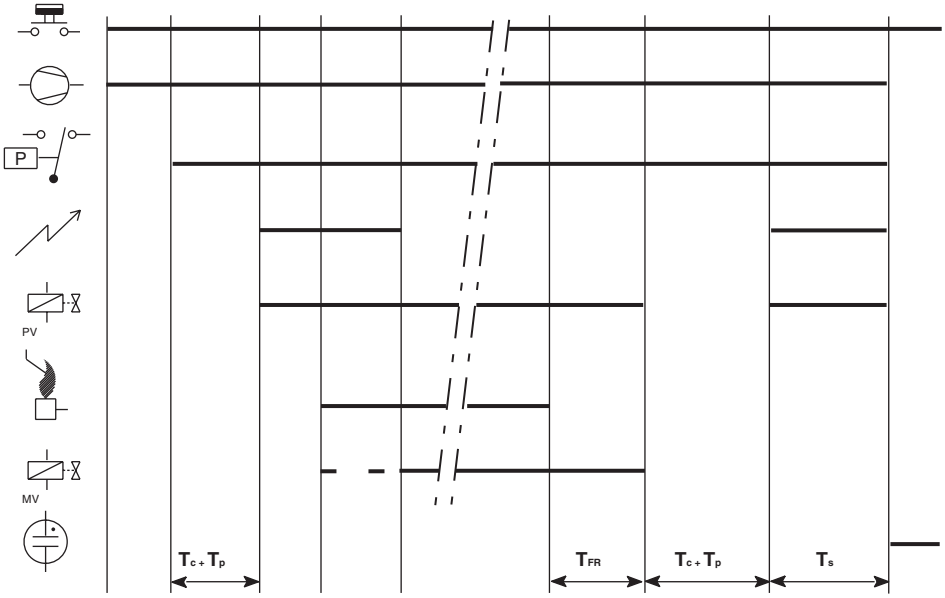

Fig. 10. Timing diagram S4565D and T

SPECIFICATIONS S4565AD, BD, CD, DD, PD, QD, RD, TD "1000" SERIES

Model
Suffix AD: atmospheric, direct burner ignition
Suffix BD: as AD but with flame relay output
Suffix CD: fan assisted, direct burner ignition
Suffix DD: as CD but with flame relay output
Suffix PD: as AD except volatile lock-out
Suffix QD: as BD except volatile lock-out
Suffix RD: as CD except volatile lock-out
Suffix TD: as DD except volatile lock-out

Supply voltage
220 ... 240 Vac, 50/60Hz (-15%, +10%)

Power consumption
4 VA

Humidity
90% RH max. at 40°C non condensing

Storage
- 30 ... 70°C

Ambient temperature
-15 ... 60°C

Electrical rating (see also note 10.)

Alarm:	220 ... 240 Vac, 50/60Hz, 1 A, cos φ > 0.6 or max 1 mA
Fan:	220 ... 240 Vac, 50/60Hz, 1 A, cos φ > 0.6
Flame relay contact:	220 ... 240 Vac, 50/60Hz,1 A, cos φ > 0.6
Flame opto coupler:	+5 V, 10 kΩ
LPG valve:	220 ... 240 Vac, 50/60 Hz, 1 A max, cos φ > 0.6

Electrical connection

High voltage spark:	2.8 x 0.5 mm spade terminal
Flame sensing:	4.8 x 0.8 mm spade terminal
PCB connectors:	Molex 3003 series suitable for Molex 3001 female cable connector

Housing (degree of protection)
See:
accessories for degree of protection page 7..
replacement parts and accessories page 66..

Timing (depending on O.S. number)

Self check time (T_c):	1.5 s
Waiting time (T_w):	0 ... 30 s
Safety time (T_s):	3.5 ... 25 s
Extended spark ignition time:	0 ... T_s (depending on elaps of safety time)

Flame sensing

Min flame current:	0.9 μA
Response time on:	> 0.2 s
Response time off (T_{FR}):	< 1 s

Ignition

Spark voltage:	> 12 kV at 40 pF load (depending on O.S. number)
Spark energy:	3 ... 15 μAs
Repetition rate:	2.5 ... 60 Hz (depending on O.S. number)
Max. spark gap:	3.5 mm
Optional external ignition circuit:	220 ... 240 V (at no load), single phase rectified, max 2 VA

Length flame sensing cable
1 m max.

Length ignition cable
0.5 m max.

Length of wiring for external components
1 m max.

Remark
Optional integrated flame relay available with safe separation or opto coupler with safe separation.
N.C. contact of flame relay has no safe separation.

⚠ WARNING

Opto coupler interface needs a debounce time > 20 ms in order to prevent noise caused by transients on mains.

CONNECTION DIAGRAM S4565AD, BD, CD, DD, PD, QD, RD, TD “1000“ SERIES

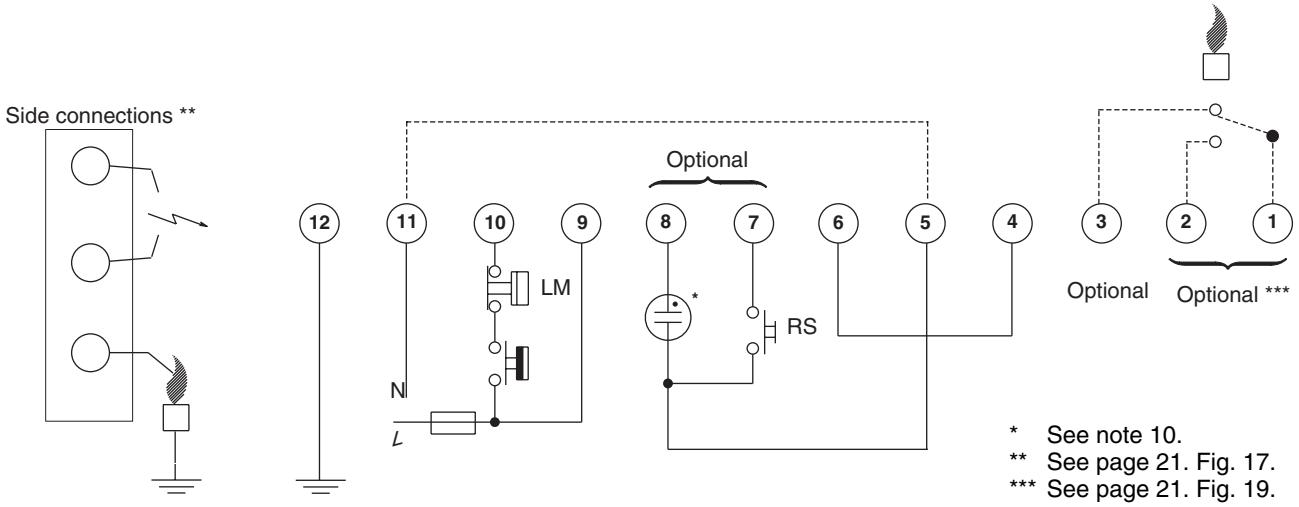

Fig. 11. Connection diagram S4565AD and BD “1000” series

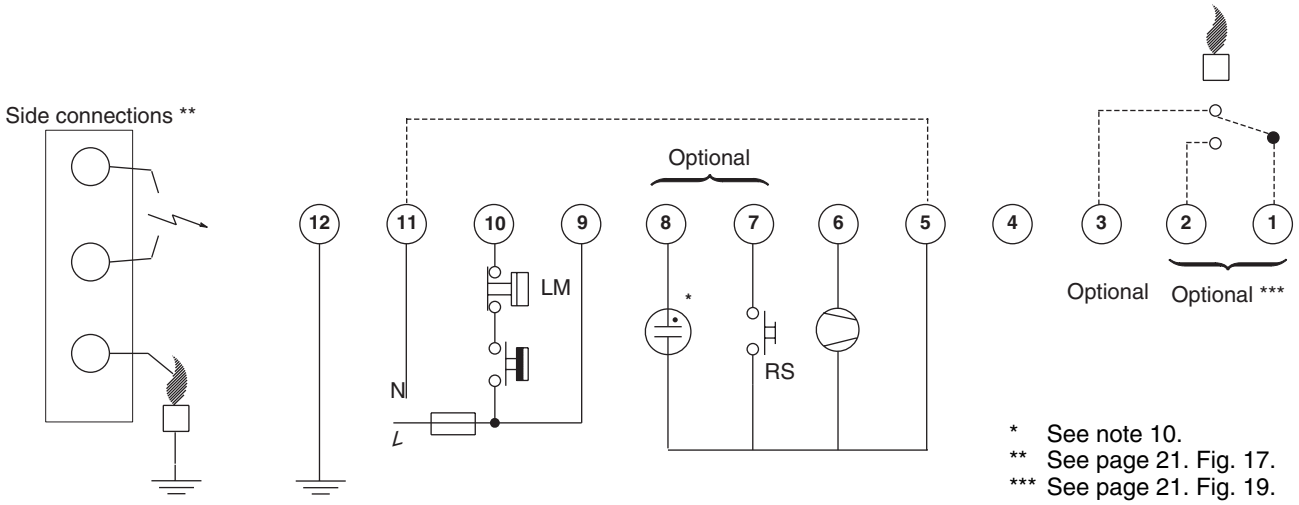

Fig. 12. Connection diagram S4565BD and QD “1000” series for gas/air application

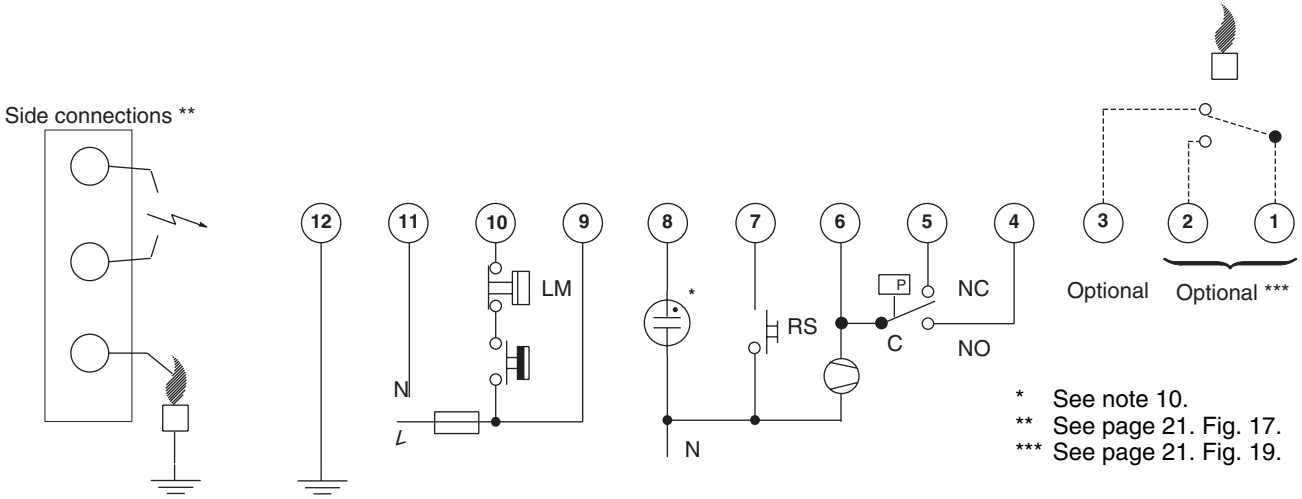

Fig. 13. Connection diagram S4565CD and DD “1000” series

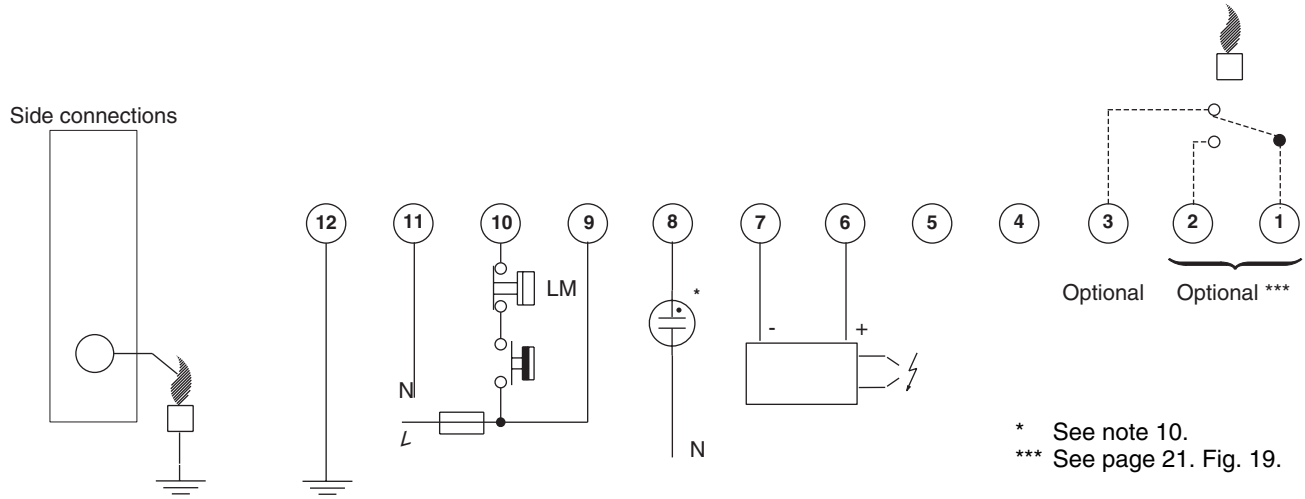

Fig. 14. Connection diagram S4565QD “1000” series with external ignition circuit

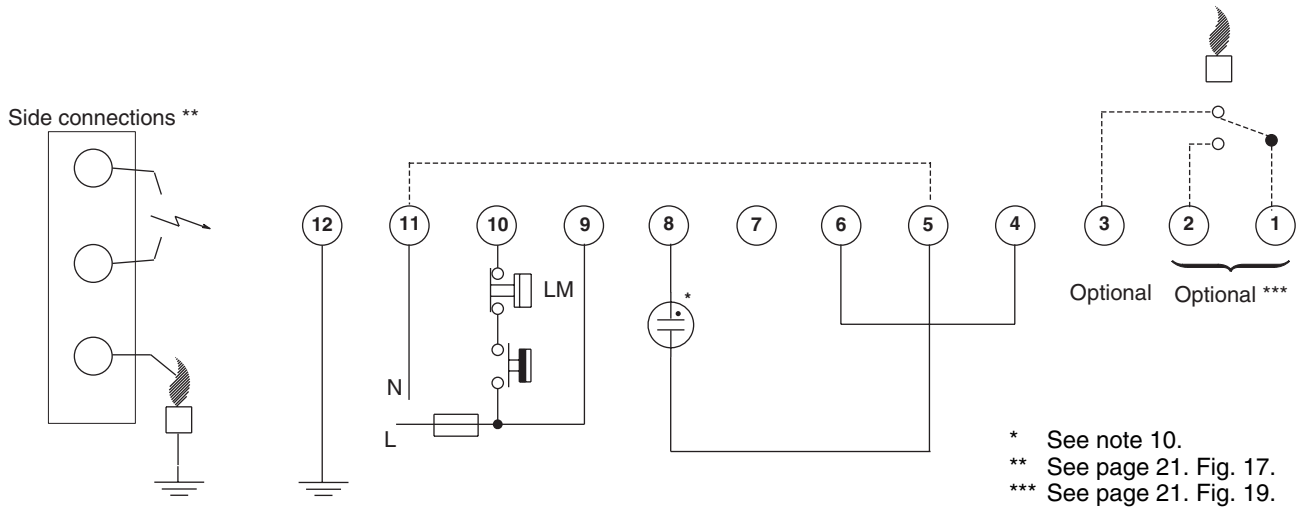

Fig. 15. Connection diagram S4565PD and QD “1000” series

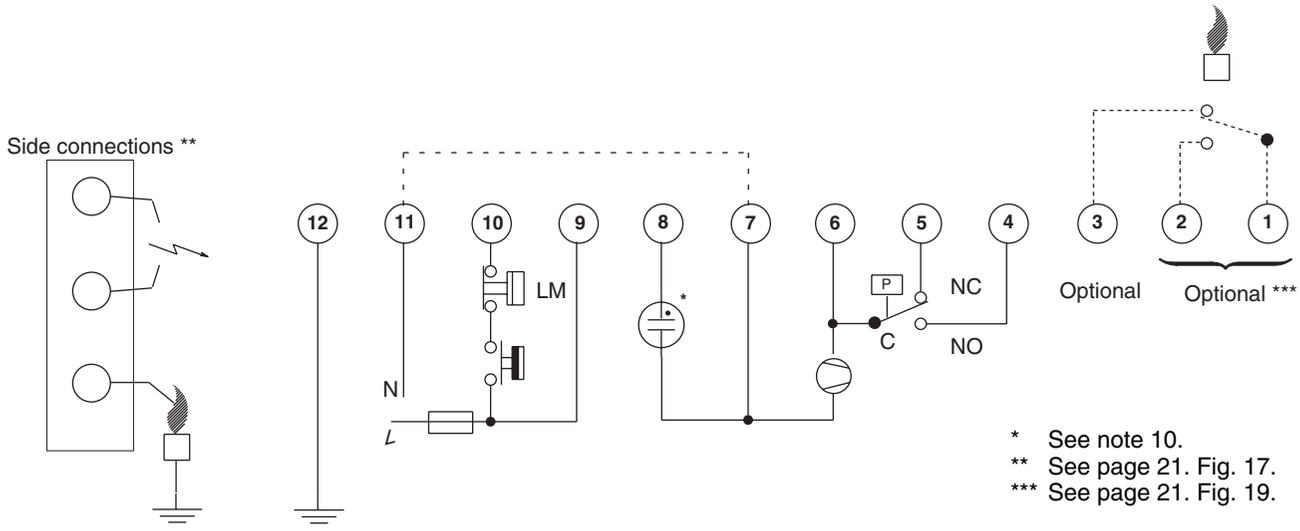

Fig. 16. Connection diagram S4565RD and TD “1000” series

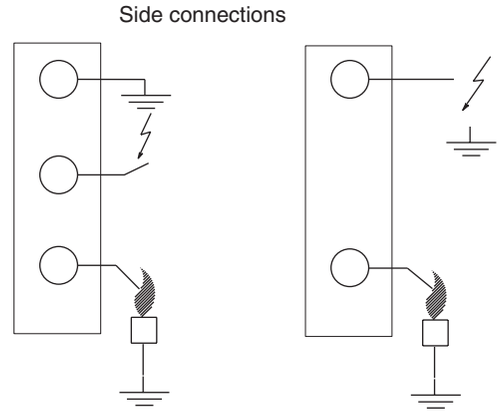

Fig. 17. Alternative side connection in case of sparking to ground

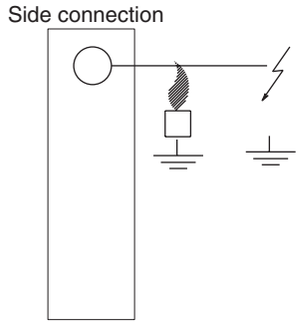

Fig. 18. Alternative side connection in case of combined flame sensing and sparking (single rod)

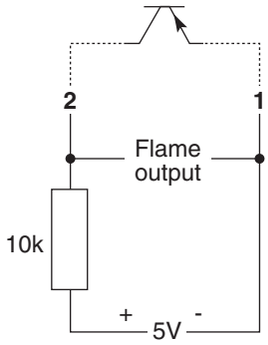

Fig. 19. Connection for opto coupler output

ПРОМЭЛЕКТРОНИКА / sales@prom-elec.com

SYSTEM OPERATION S4565AD, BD, CD, DD, PD, QD, RD, TD "1000" SERIES

General
The S4565AD, BD, CD, DD, PD, QD, RD, TD ignition controls can provide both closed-loop sparking and sparking to ground.
If the S4565AD, BD, CD, DD, PD, QD, RD, TD will be used in sparking to ground applications, the upper spark tap has to be grounded.

Lock out reset
The ignition control can be is reset by either depressing the internal/external reset button (suffix AD, BD, CD and DD) or by interrupting the permanent life (suffix PD, QD, RD, and TD).
If a first reset is not succesful, wait at least 15 seconds before attempting another one.

NOTE 8.: When first starting, the ignition control can be in the lock-out condition; reset the ignition control. after a reset an extended waiting time will occur.

NOTE 9.: If during normal use the reset button is pressed, the gas valves close and the ignition control starts a new sequence after releasing the reset button.

NOTE 10.: If permanent alarm output: neon indicator with integral resistor >150 kΩ (max 1 mA)

Suffix AD and PD (see Fig. 20.)
When there is a call for heat a self check period (T_c) plus waiting period (T_w) elapse before the built-in igniter and gas valve are switched on.
The ignition spark ignites gas and resulting flame is detected by the flame rod.
After flame establishment a predetermined, extended ignition time can be included.
If flame is not established within the safety time (T_s), the gnition control locks out.
If the flame is lost during normal run, the ignition control repeats start sequence.

Suffix BD and QD (see Fig. 21.)
As AD and PD except flame relay contact or opto is closed after flame detection.

Suffix CD and RD (see Fig. 22.)
When there is a call for heat the fan starts running through the no air position of the air proving switch after self check period (T_c) plus waiting period (T_w)
When sufficient air flow is proven by the air proving switch, the built-in igniter and gas valve are switched on.
The ignition spark ignites gas and resulting flame is detected by the flame rod.
After flame establishment a predetermined, extended ignition time can be included.
If flame is not established within the safety time (T_s), the ignition control locks out.
If the flame is lost during normal run, the ignition control repeats start sequence.
If no air is proven by the air proving switch within the safety time (T_s), the ignition control locks out.

Suffix DD and TD (see Fig. 23.)
As CD and RD except flame relay or opto is closed after flame detection.

Gas/air application
For gas/air application without dynamic aircheck, the S4565AD, BD, PD or QD can be used.
In this application the fan is connected between pin 5 and 6 and will start when a call for heat is present. The waiting period now acts as a prepurge time.
When the call for heat disappears or when the ignition control goes in lock-out, the fan will be switched off.

* The safety time starts after the fan is switched on.

TIMING DIAGRAM S4565AD, BD, CD, DD, PD, QD, RD, TD “1000” SERIES

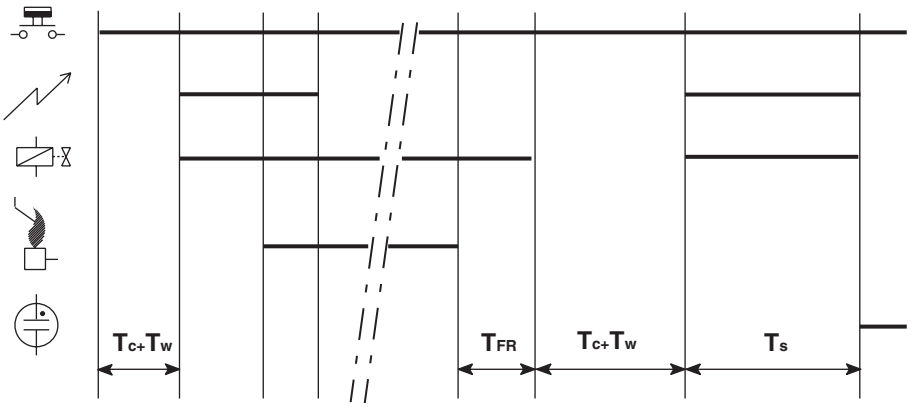

Fig. 20. Timing diagram S4565AD, PD “1000” series

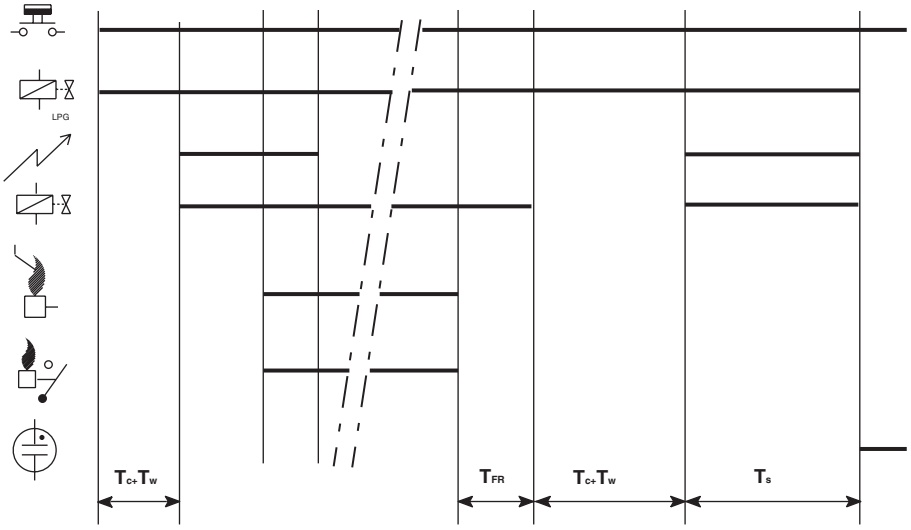

Fig. 21. Timing diagram S4565BD and QD “1000” series

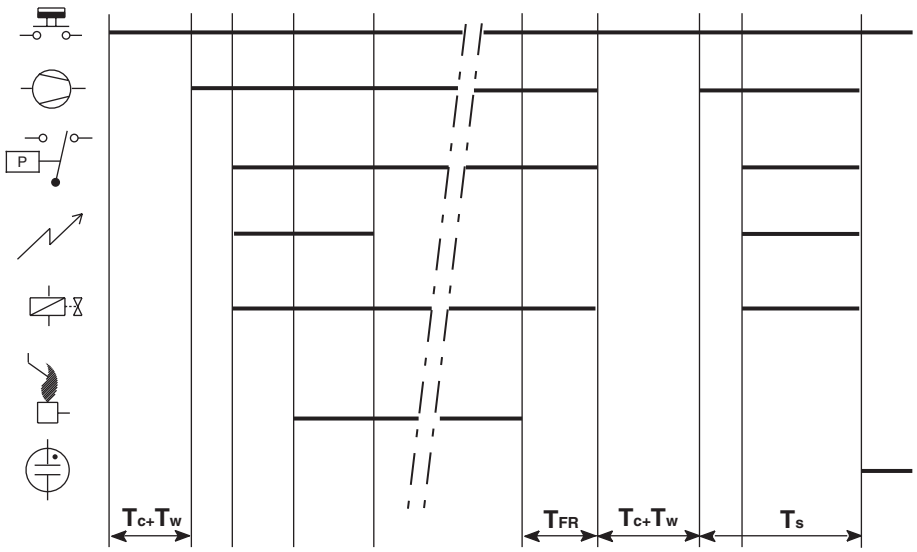

Fig. 22. Timing diagram S4565CD and RD “1000” series

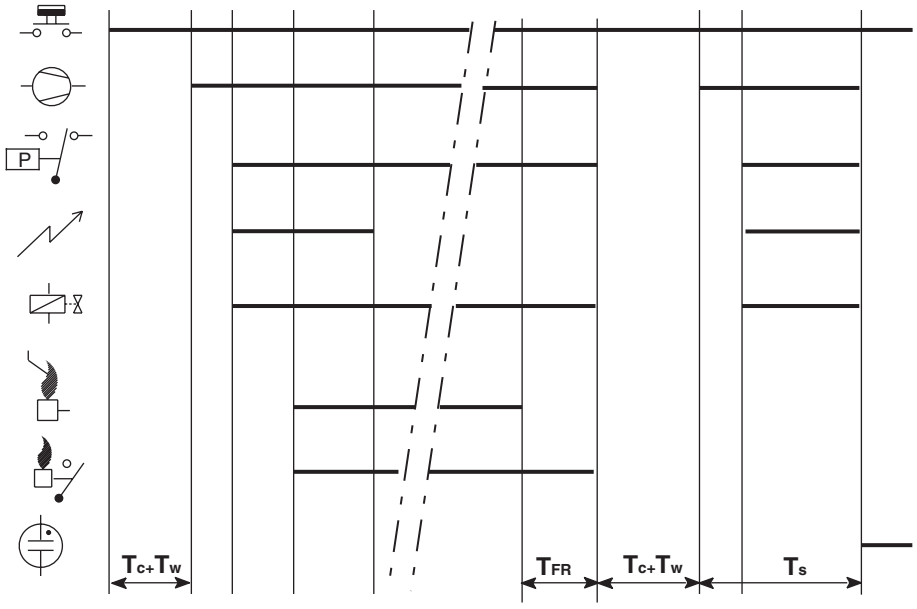

Fig. 23. Timing diagram S4565DD and TD “1000” series

SPECIFICATIONS S4565AD, BD, CD, DD, PD, QD, RD, SD, TD "2000" SERIES

Model
Suffix AD: atmospheric, direct burner ignition
Suffix BD: as AD but with flame relay output
Suffix CD: fan assisted, direct burner ignition
Suffix DD: as CD but with flame relay output
Suffix PD: as AD except volatile lock-out
Suffix QD: as BD except volatile lock-out
Suffix RD: as CD except volatile lock-out
Suffix SD: ignition circuit and rectifier only
Suffix TD: as DD except volatile lock-out

Supply voltage
230 ... 240 Vac, 50/60 Hz

Power consumption
4 VA

Humidity
90% RH max. at 40°C

Ambient temperature
-15 ... 60°C

Electrical rating (see also note 13.)

Alarm:	230 ... 240 Vac, 50/60 Hz, output max 1mA (e.g. neon light with internal resistor > 150 kΩ)
Fan:	230 ... 240 Vac, 50/60 Hz, max 1 A, max cos φ > 0.6
Hour counter:	230 ... 240 Vac, 50/60 Hz, max 1 A, cos φ > 0.6
Flame relay contact:	230 ... 240 Vac, 50/60 Hz, max 1 A, cos φ > 0.6
Flame opto coupler:	+5 V, 10 kΩ

Electrical connection

High voltage spark:	2.8 mm spade terminal
optional:	4 mm round terminal in spark to ground application
Flame sensing:	4.8 mm spade terminal
PCB connectors:	Molex 3003 series suitable for Molex 3001 female cable connector

Housing (degree of protection)
See:
accessories for degree of protection page 7..
replacement parts and accessories page 66..

Timing (depending on O.S. number)

Self check time (T_c):	0 ... 2 s
Waiting time (T_w):	0 ... 30 s
Safety time (T_s):	3.5 ... 55 s
Extended spark ignition time:	0 ... T_s (depending on elaps of safety time)

Flame sensing
Min flame current:
for optional phase independent systems:0.5 μA
for phase dependent systems: 0.9 μA
Response time on: > 0.2 s
Response time off (T_{FR}): < 1 s
(optionally other values available)

Ignition

Spark voltage:	> 12 kV at 40 pF load (depending on O.S. number)
Spark energy:	3 ... 15 μAs
Repetition rate:	2.5 ... 60 Hz (depending on O.S. number)
Max. spark gap:	3.5 mm

Length flame sensing cable
1 m max.

Length ignition cable
0.5 m max.

Length of wiring for external components
1 m max.

Remark
Optional integrated flame relay available with safe separation or opto coupler with safe separation.
N.C. contact of flame relay has no safe separation.

⚠ WARNING

Opto coupler interface needs a debounce time > 20 ms in order to prevent noise caused by transients on mains.

CONNECTION DIAGRAM S4565AD, BD, CD, DD, PD, QD, RD, TD “2000” SERIES

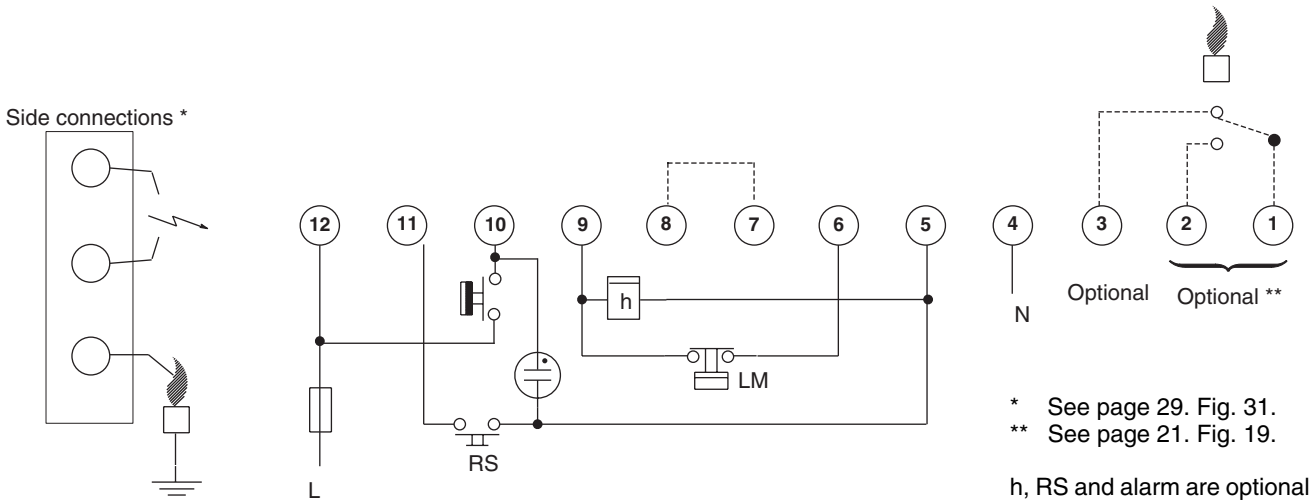

Fig. 24. Connection diagram S4565AD and BD “2000” series

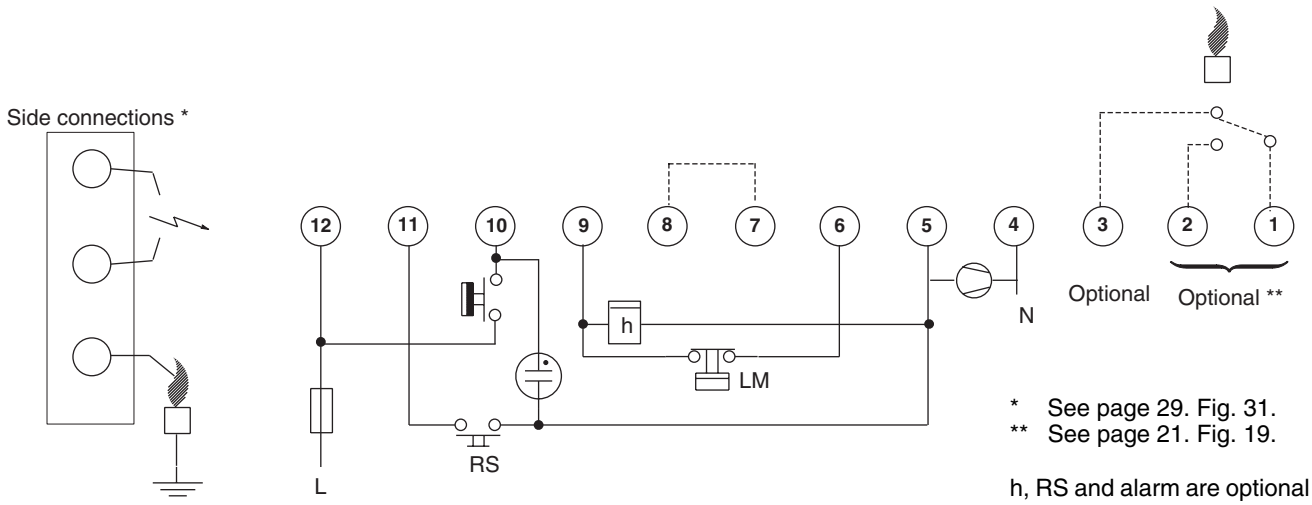

Fig. 25. Connection diagram S4565AD and BD “2000 “ series for gas/air application

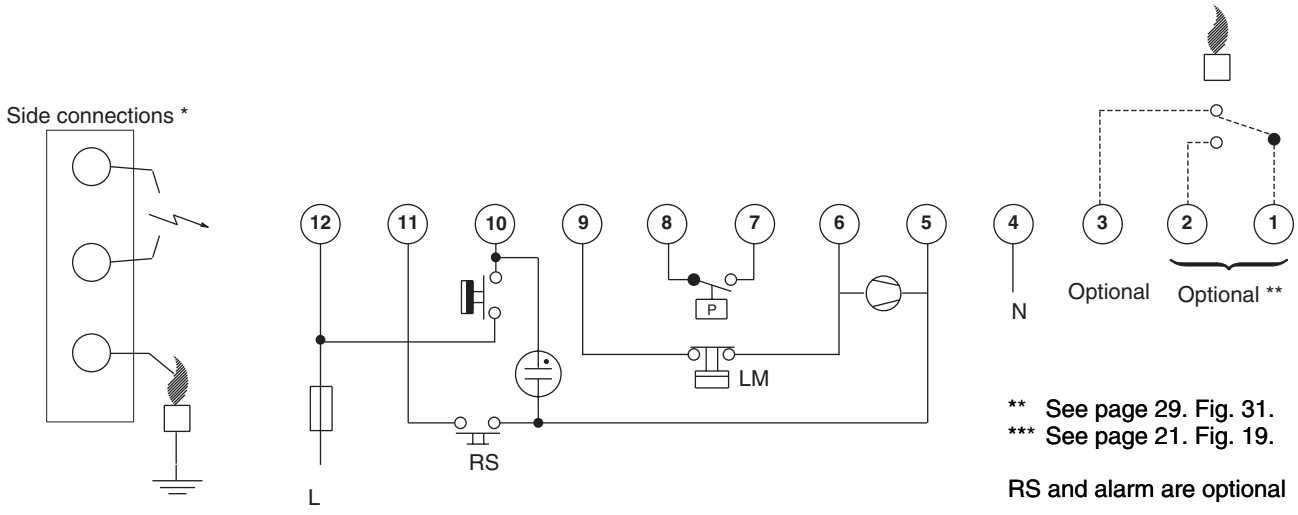

Fig. 26. Connection diagram S4565CD and DD “2000” series

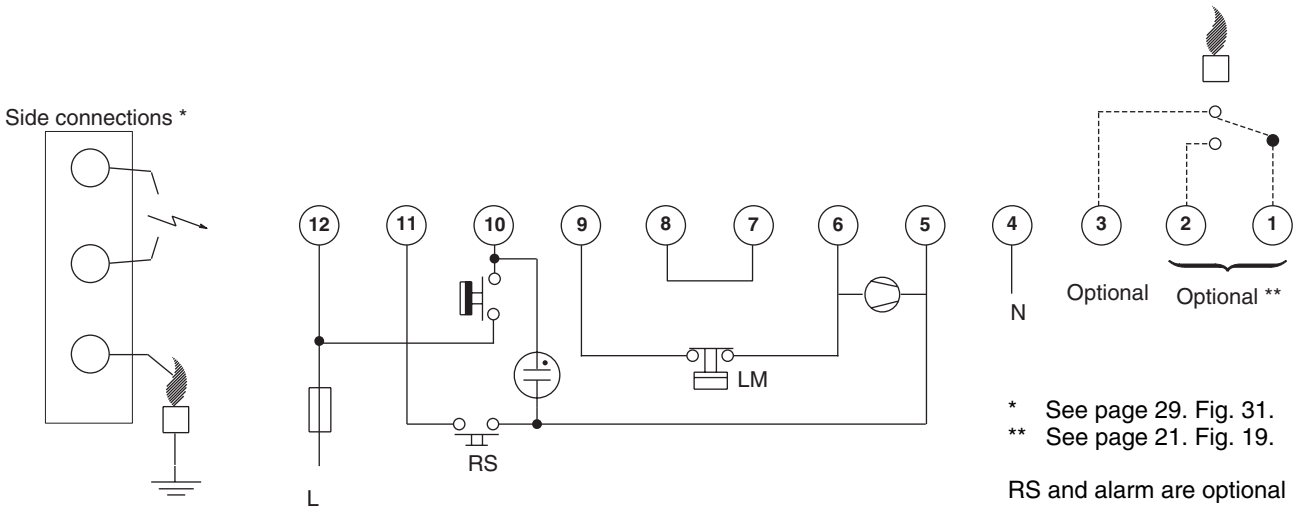

Fig. 27. Connection diagram S4565CD and DD “2000” series in atmospheric appliances

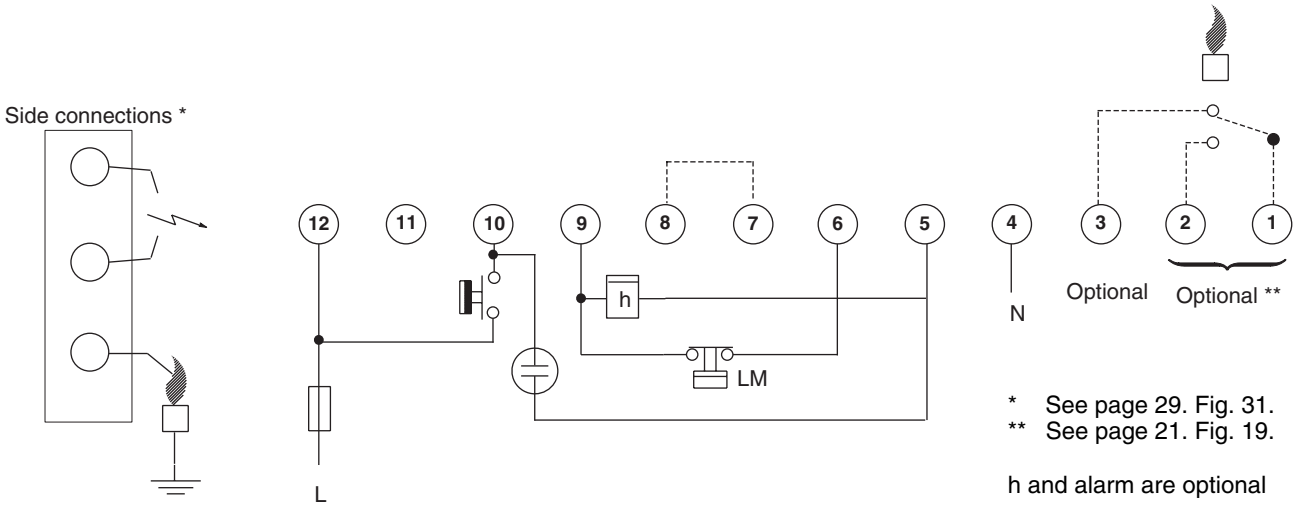

Fig. 28. Connection diagram S4565PD and QD “2000” series

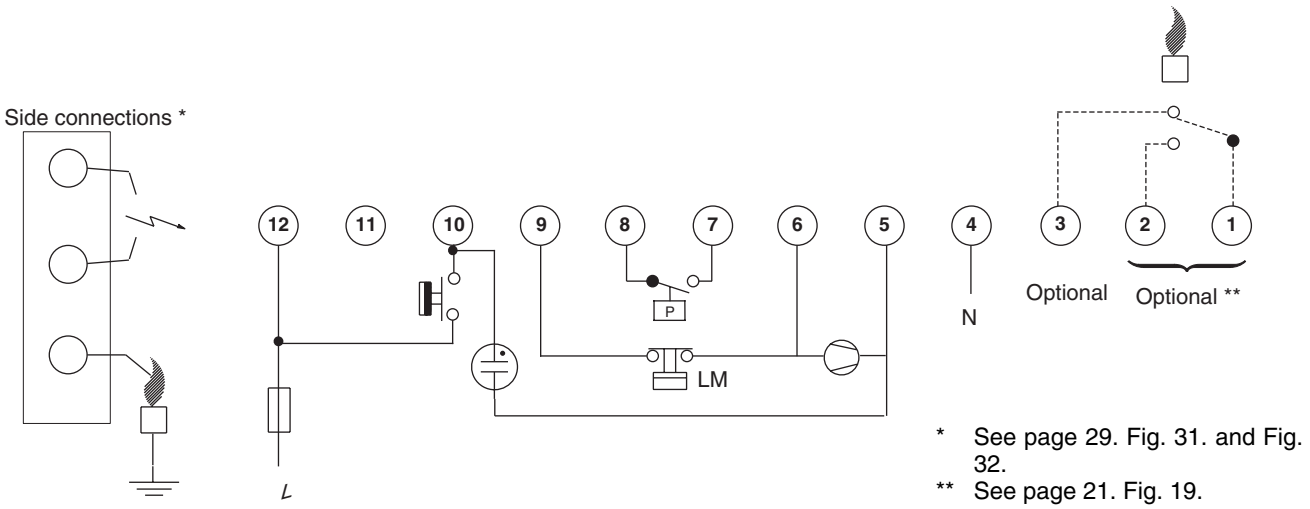

Fig. 29. Connection diagram S4565RD and TD “2000” series

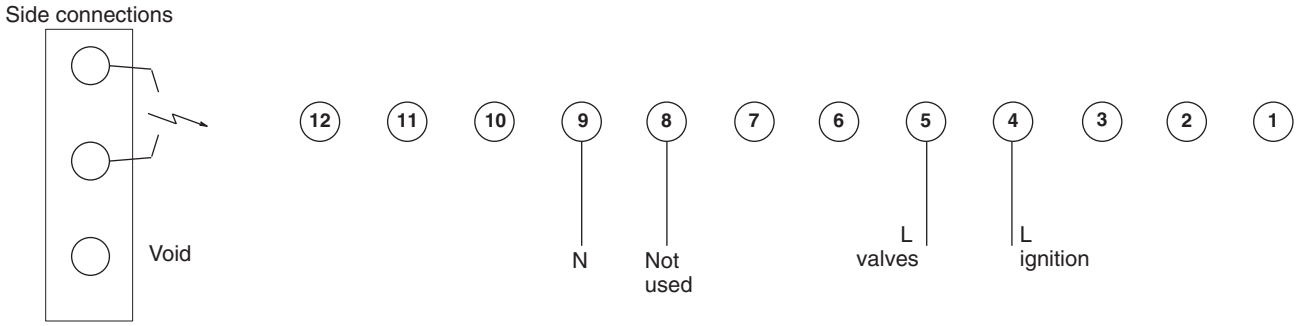

Fig. 30. Connection diagram S4565SD “2000” series

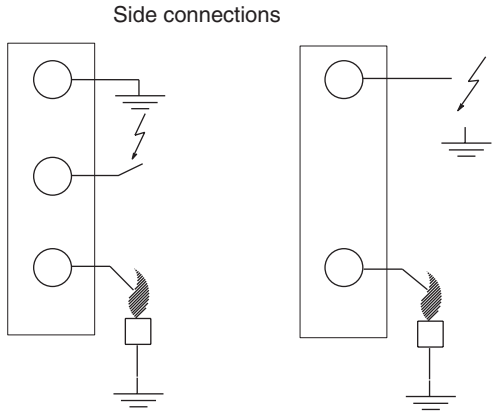

Fig. 31. Alternative side connection in case of sparking to ground

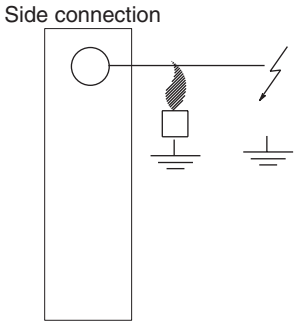

Fig. 32. Alternative side connection in case of combined flame sensing and sparking (single rod)

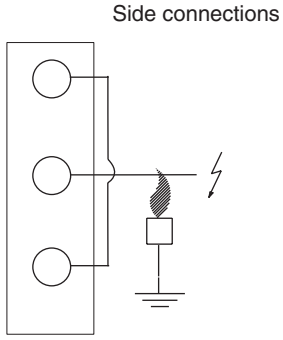

Fig. 33. Alternative side connection in case of combined flame sensing and sparking

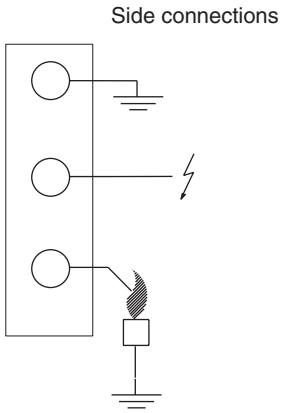

Fig. 34. Alternative side connection in case of sparking to ground

SYSTEM OPERATION S4565AD, BD, CD, DD, PD, QD, RD, SD, TD "2000" SERIES

General
The S4565AD, BD, CD, DD, PD, QD, RD, TD ignition controls can provide both closed-loop sparking and sparking to ground.
The S4565SD ignition circuit and rectifier provides closed-loop sparking.

Lock-out reset
The ignition control can be reset by either depressing the internal/external reset button (suffix AD, BD, CD and DD) or by interrupting the permanent life (suffix PD, QD, RD and TD).

NOTE 11.: When first starting, the ignition control can be in the lock-out condition, depress the reset button to free the ignition control. After a reset an extended waiting time will occur.

NOTE 12.: If during normal use the reset button is pressed, the gas valves close and the ignition control starts a new sequence after releasing the reset button.

NOTE 13.: If permanent alarm output:neon indicator with integral resistor >150 kΩ (max 1 mA).
Do not connect any electrical load to the heat demand input, it will influence proper functionality.

Suffix AD and PD (see Fig. 35.)
When there is a call for heat a self check period (T_c) plus waiting period (T_w) elapse before the built-in igniter and gas valve are switched on.
The ignition spark ignites gas and resulting flame is detected by the flame rod.
After flame establishment a predetermined, extended ignition time can be included.
If flame is not established within the safety time (T_s), the ignition control locks out.
If the flame is lost during normal run, the ignition control repeats start sequence.

Suffix BD and QD (see Fig. 36.)
As AD and PD except flame relay contact or opto is activated after flame detection.

NOTE 14.: The hour counter is energized when the valve is energized. It can be used as an output signal.

Suffix CD and RD (see Fig. 37.)
When there is a call for heat, self check period (T_c) plus waiting period (T_w) elapse if the air proving switch is in the no air position.
After $T_c + T_w$ the fan starts running.
When sufficient air flow is proven by the air proving switch, the built-in igniter and gas valve are switched on.
The ignition spark ignites gas and resulting flame is detected by the flame rod.
After flame establishment a predetermined, extended ignition time can be included.
If flame is not established within the safety time (T_s), the ignition control locks out.
If the flame is lost during normal run, the ignition control repeats start sequence.
If no air is proven by the air proving switch, the ignition control stays waiting (optional lock out on no air can be included).

Suffix DD and TD (see Fig. 38.)
As CD and RD except flame relay contact or opto is activated after flame detection.

Suffix SD (see Fig. 30.)
If line voltage is applied between pin 5 (line valves) and pin 9 (N), the gas valve is switched on.
If the line voltage is applied between pin 4 (line ignition) and pin 9 (N) the build in igniter is switched on.
The igniter circuit is fed during the negative half wave of the mains.
Pin 8 is present but not intended for use. It is connected with a resistor (100 Ω) to pin 5.
Ignition circuit must be on shorter than 10 s in an application with single ignition trial.

Gas/air application
For gas/air application without dynamic aircheck, the S4565AD, BD, PD or QD can be used.
In this application the fan is connected between pin 4 and 5 and will start when a call for heat is present. The waiting period now acts as a prepurge time.
When the call for heat disappears or when the ignition control goes in lock-out, the fan will be switched off.

TIMING DIAGRAM S4565AD, BD, CD, DD, PD, QD, RD, TD “2000” SERIES

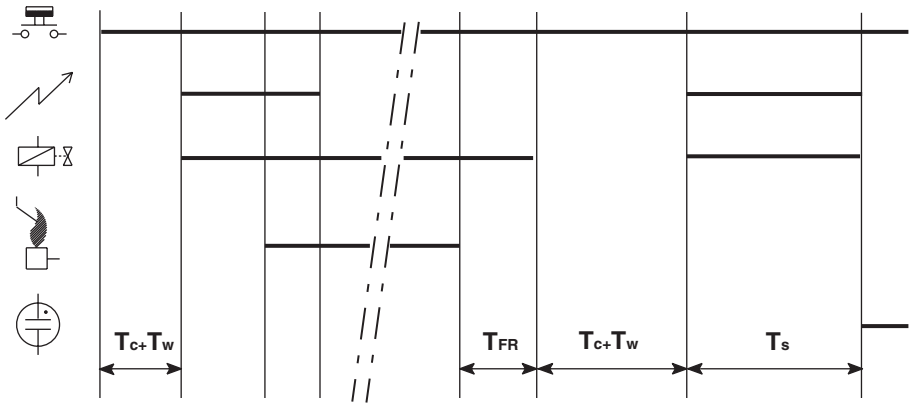

Fig. 35. Timing diagram S4565AD, PD “2000” series

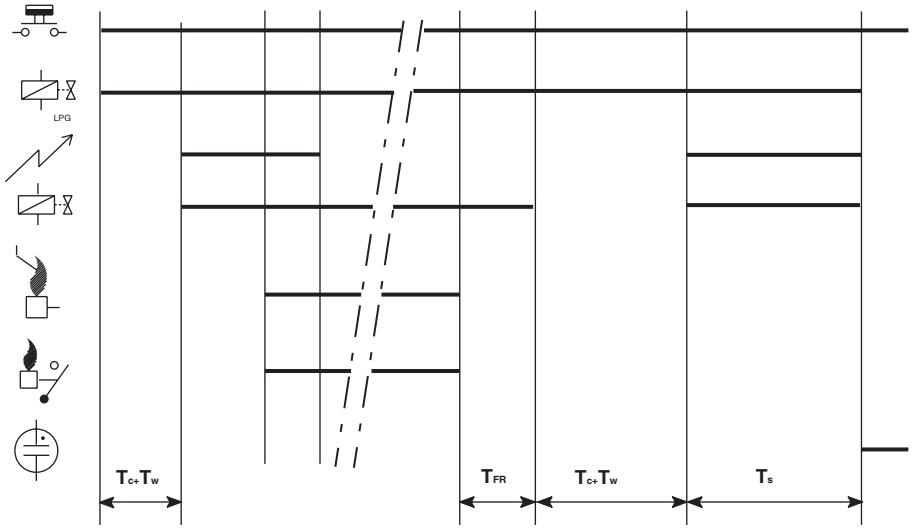

Fig. 36. Timing diagram S4565BD, QD “2000” series

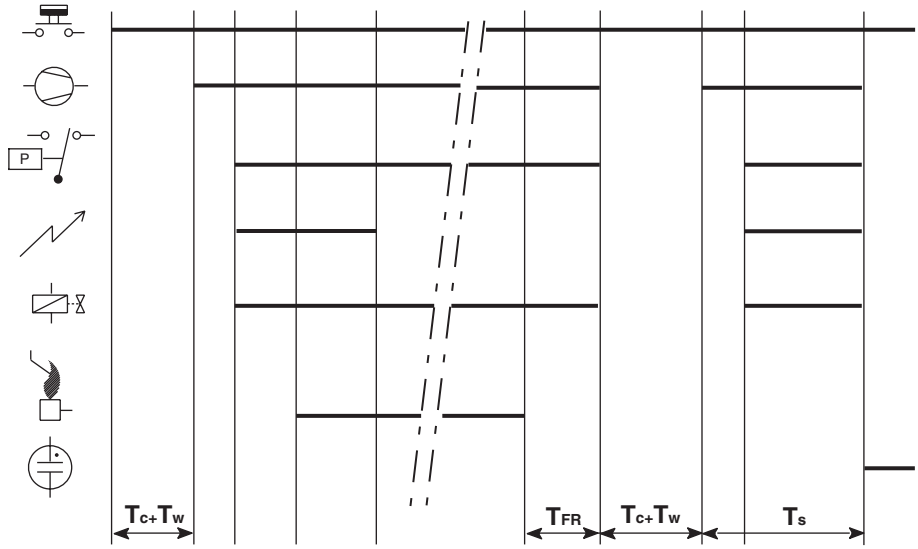

Fig. 37. Timing diagram S4565CD, RD “2000” series

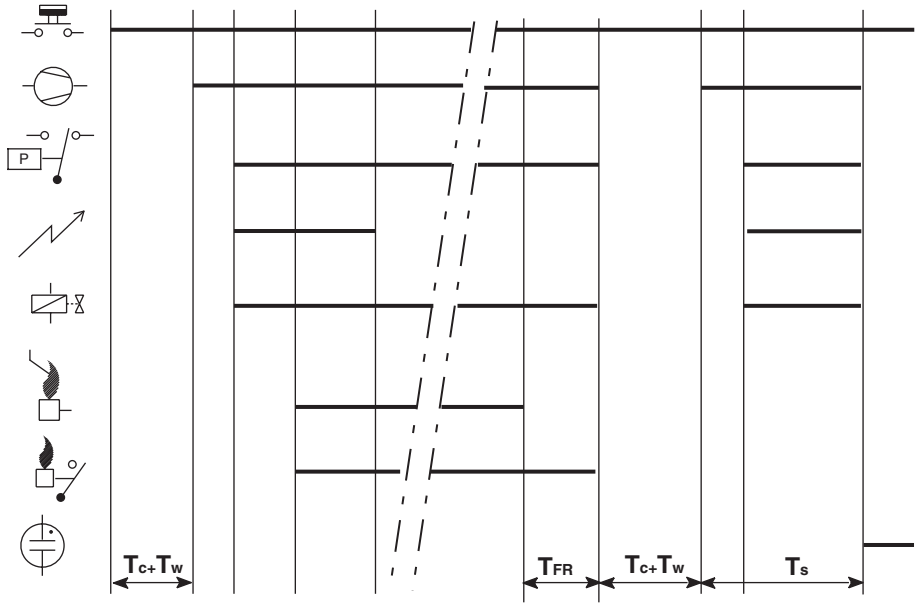

Fig. 38. Timing diagram S4565DD, TD “2000” series

SPECIFICATIONS

S4565AF, BF, CF, DF, PF, QF, RF, TF

Model
Suffix AF: atmospheric, direct burner ignition
Suffix BF: atmospheric, intermittent pilot burner ignition including safety timer
Suffix CF: fan assisted, direct burner ignition
Suffix DF: fan assisted, intermittent pilot burner ignition including safety timer
Suffix PF: as AF except volatile lock-out
Suffix QF: s BF except volatile lock-out
Suffix RF: as CF except volatile lock-out
Suffix TF: as DF except volatile lock-out

Supply voltage
220 ... 240 Vac, 50/60Hz (-15%,+10%)

Power consumption
4 VA

Humidity
90% RH max. at 40°C

Ambient temperature
-15 ... 60°C

Electrical rating (see also note 17.)

Alarm:	220 ... 240 Vac, 50/60Hz, 1 A, cos φ > 0.6 or max 1 mA
Fan:	220 ... 240 Vac, 50/60Hz, 1 A, cos φ > 0.6
LPG outdoor valve:	220 ... 240 Vac, 50/60Hz, 1 A, cos φ > 0.6
Second main valve:	220 ... 240 Vac, 50/60Hz, 1 A, cos φ > 0.6

Electrical connection

High voltage spark:	2.8 x 0.5 mm spade terminal
Optional:	4 mm round terminal
Flame sensing:	4.8 x 0.8 mm spade terminal or 2.8 x 0.5 mm spade terminal for combined high voltage spark/flame sensing
PCB connectors:	Molex 3003 series suitable for Molex 3001 female cable connector

Housing (degree of protection)
See:
accessories for degree of protection page 7..
replacement parts and accessories page 66..

Timing (depending on O.S. number)

Self check time (T_c):	1.5 s
Waiting time (T_w):	0 ... 30 s
Safety time (T_s):	3.5 ... 55 s
Extended spark ignition time and stabilisation time:	0 ... T_s (depending on elaps of safety time)

Flame sensing

Min flame current:	0.9 μA
Response time on:	> 0.2 s
Response time off (T_{FR}):	< 1 s

Ignition

Spark voltage:	> 12 kV at 40 pF load (depending on O.S. number)
Spark energy:	3 ... 15 μAs
Repetition rate:	2.5 ... 60 Hz (depending on O.S. number)
Max. spark gap:	3.5 mm

Length flame sensing cable
1 m maximum

Length ignition cable
0.5 m max.

Length of wiring for external components
1 m max.

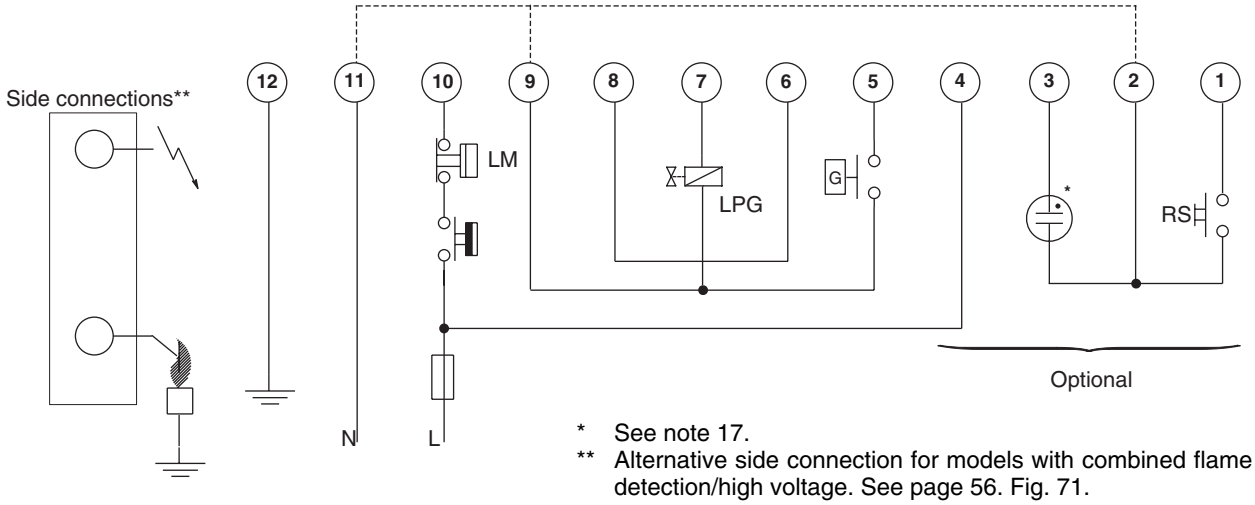

* See note 17.
** Alternative side connection for models with combined flame detection/high voltage. See page 56. Fig. 71.

Fig. 39. Connection diagram S4565AF, BF, PF and QF

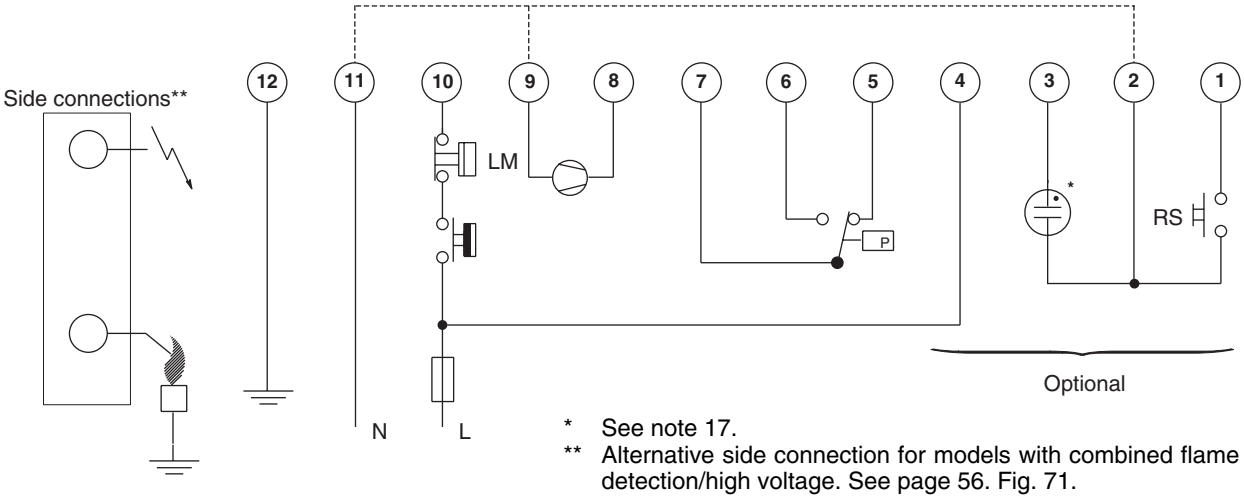

* See note 17.
** Alternative side connection for models with combined flame detection/high voltage. See page 56. Fig. 71.

Fig. 40. Connection diagram S4565CF, DF, RF and TF

SYSTEM OPERATION

S4565AF, BF, CF, DF, EF, PF, QF, RF, TF

General

Lock-out reset
The S4565AF, BF, CF, DF, EF, PF, QF, RF and TF ignition controls can be reset by either depressing the internal/ external reset button (suffix AF, BF, CF and DF) or by interrupting the permanent life (suffix PF, QF, RF, and TF). If a first reset is not succesful, wait at least 15 seconds before attempting another one.

NOTE 15.: When first starting, the ignition control can be in the lock-out condition; reset the ignition control.

NOTE 16.: If during normal use the reset button is pressed, the gas valves close and the ignition control starts a new sequence after releasing the reset button.

NOTE 17.: If permanent alarm output:neon indicator with integral resistor >150 kΩ (max 1 mA)

NOTE 18.: If an external LPG valve and gas pressure switch are connected, the LPG valve is energized after call for heat. The ignition control stays in waiting mode untill the gas pressure switch is closed. If during normal operation gas pressure switch opens, the gas valves will not be closed.

Suffix AF and PF (see Fig. 41.)
When there is a call for heat a self check period (T_c) plus a waiting period (T_w) elapse before built-in igniter and gas valve are switched on.
The ignition spark ignites gas and resulting flame is detected by the flame rod.
After flame establishment a predetermined, extended ignition time can be included.
If flame is not established within the safety time (T_s), the ignition control locks out.
If the flame is lost during normal run, the ignition control repeats start sequence.

Suffix BF and QF (see Fig. 42.)
When there is a call for heat a self check period (T_c) plus a waiting period (T_w) elapse before built-in igniter and pilot gas valve are switched on.
The ignition spark ignites pilot gas and resulting flame is detected by the flame rod.
After flame establishment a predetermined, extended ignition time can be included then the main valve is switched on.
If flame is not established within the safety time (T_s), the ignition control locks out.
If the flame is lost during normal run, the ignition control repeats start sequence.

Suffix CF and RF (see Fig. 43.
When there is a call for heat the fan starts running through the no air position of the air proving switch after a self check period (T_c) plus a waiting period (T_w).
When sufficient air flow is proven by the air proving switch, the built-in igniter and gas valve are switched on.
The ignition spark ignites gas and resulting flame is detected by the flame rod.
After flame establishment a predetermined, extended ignition time can be included.
If flame is not established within the safety time (T_s), the ignition control locks out.
If the flame is lost during normal run, the ignition control repeats start sequence.
If no air is proven by the air proving switch within the safety time (T_s), the ignition control locks out.

Suffix DF and TF (see Fig. 44.)
When there is a call for heat the fan starts running through the no air position of the air proving switch after a self check period (T_c) plus a waiting period (T_{w*}).
When sufficient air flow is proven by the air proving switch, the built-in igniter and pilot gas valve are switched on.
The ignition spark ignites pilot gas and resulting flame is detected by the flame rod.
Ignition is switched off after a predetermined extended ignition time $T_{(ext)}$ and flame establishment and then the main valve is switched on.
If flame is not established within the safety time (T_s), the ignition control locks out.
If the flame is lost during normal run, the ignition control repeats start sequence.
If no air is proven by the air proving switch within the safety time (T_s), the ignition control locks out.

* The safety time starts after fan is switched on.

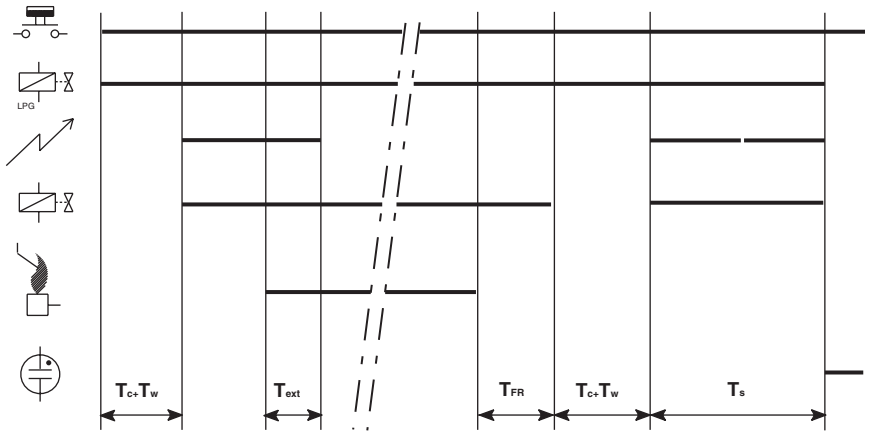

Fig. 41. Timing diagram S4565AF and PF

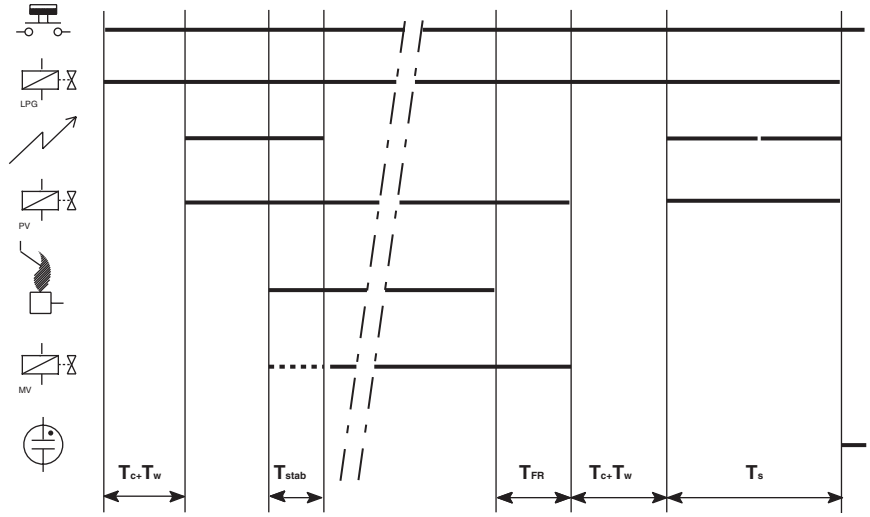

Fig. 42. Timing diagram S4565BF and QF

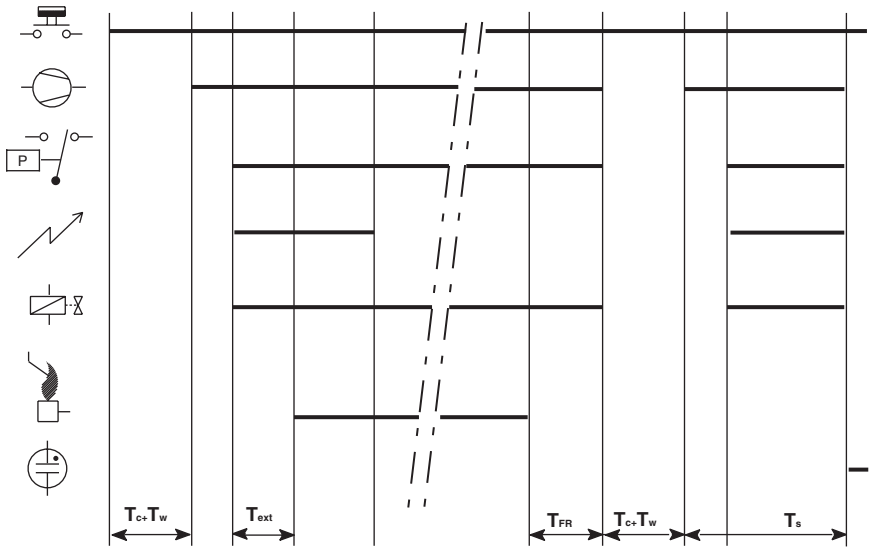

Fig. 43. Timing diagram S4565CF and RF

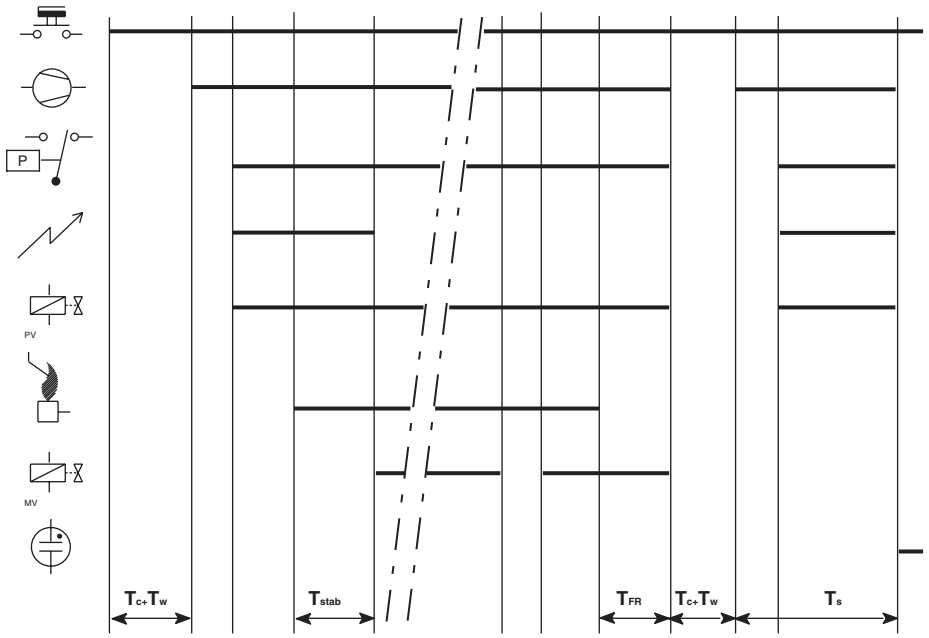

Fig. 44. Timing diagram S4565DF and TF

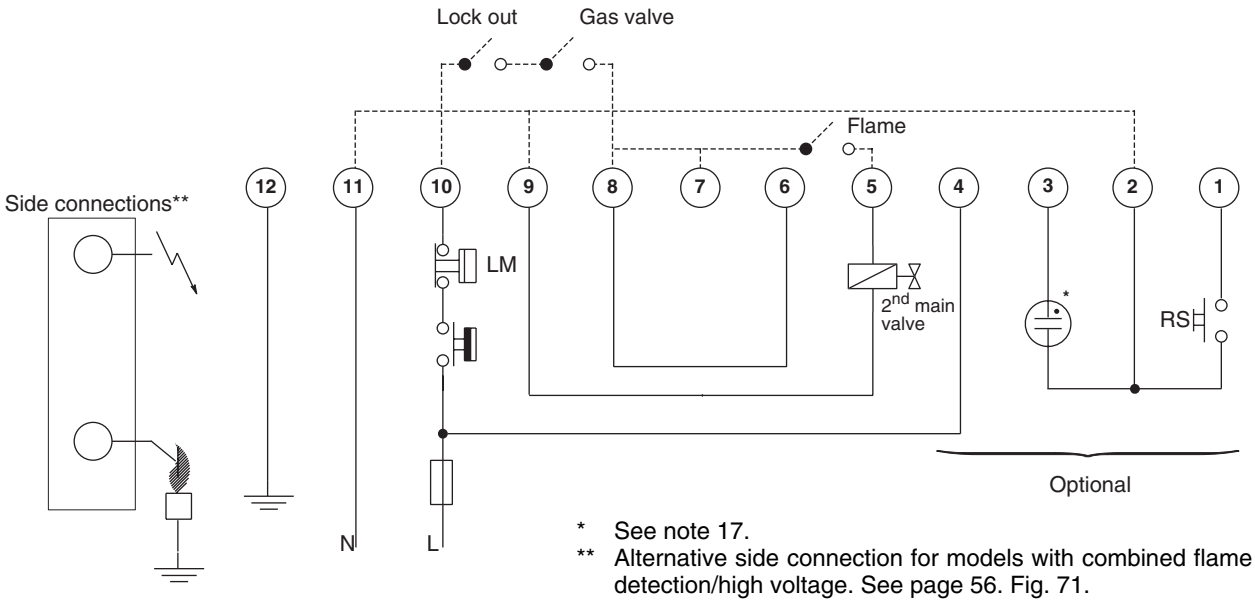

* See note 17.
** Alternative side connection for models with combined flame detection/high voltage. See page 56. Fig. 71.

Fig. 45. Connection diagram S4565BF with second main valve control

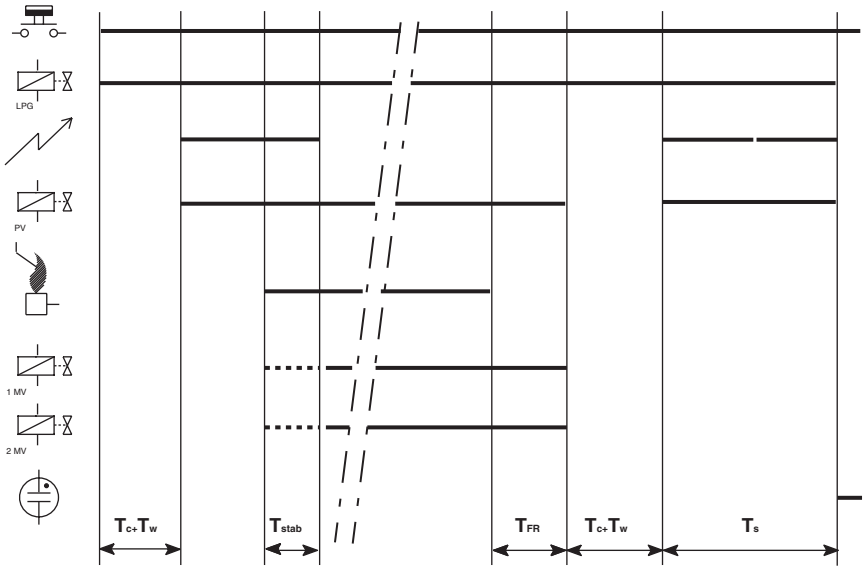

Fig. 46. Timing diagram S4565BF with second main valve control

APPLICATION NOTE S4565DF, TF WITH EXTERNAL MAIN BURNER INTERRUPT

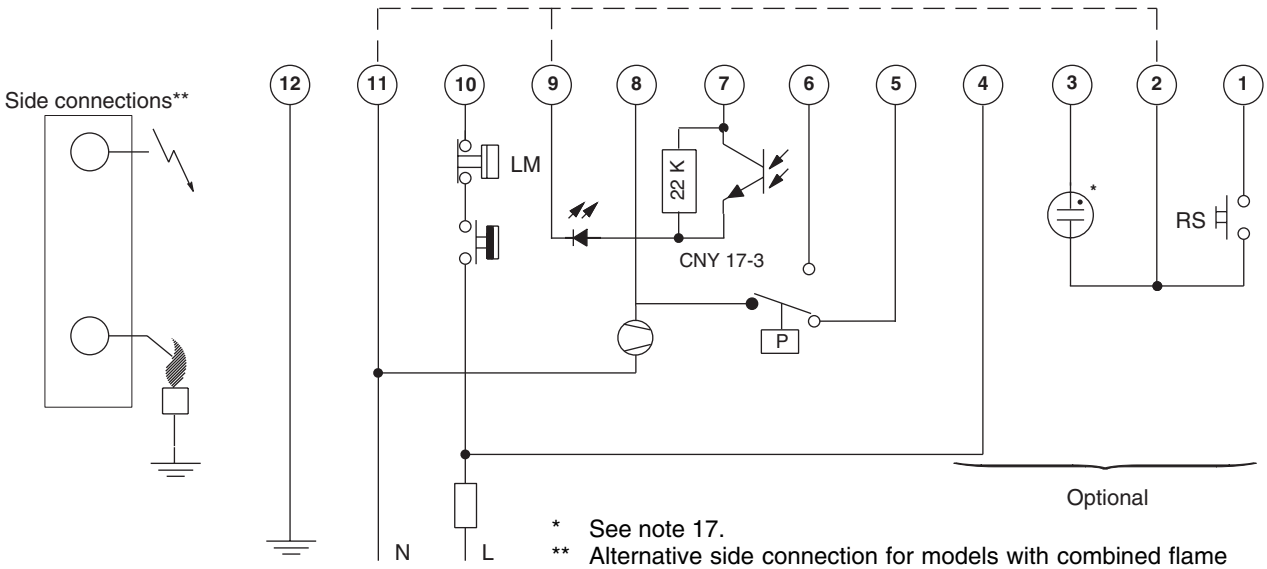

* See note 17.
** Alternative side connection for models with combined flame detection/high voltage. See page 56. Fig. 71.

Fig. 47. Connection diagram S4565DF, TF with external main burner interrupt in fan assisted applications

External main burner interrupt
Maximum open contact voltage 24 V
Maximum current 15 mA
A low voltage relay is suitable.
An opto coupler e.g. CNY17-3 is also possible
A flame indicating series LED (see Fig. 49.) will conduct minimal 0.85 mA if the contact is open and will conduct minimal 3.5 mA if the contact is closed.

Suffix DF and TF in fan assisted applications (see Fig. 48.)
When there is a call for heat the fan starts running through the no air position of the air proving switch after a self check period (T_c) plus a waiting period (T_{w*}) (* = The safety time starts after fan is switched on).
When sufficient air flow is proven by the air proving switch, the built-in igniter and pilot gas valve are switched on.
The ignition spark ignites pilot gas and resulting flame is detected by the flame rod.
Ignition is switched off after a predetermined extended ignition time $T(_{ext})$ and flame establishment and then the main valve is switched on.
If flame is not established within the safety time (T_s), the ignition control locks out.
If the flame is lost during normal run, the ignition control repeats start sequence.
If no air is proven by the air proving switch within the safety time (T_s), the ignition control locks out.
If the internal main burner interrupt is activated (relay contact opened or opto transistor de-activated) the main valve drops off, but the pilot flame stays present.

Suffix DF and TF in atmospheric applications (see Fig. 50.)
When there is a call for heat ignition starts immediately after the self check period (T_c) plus a waiting period (T_w).

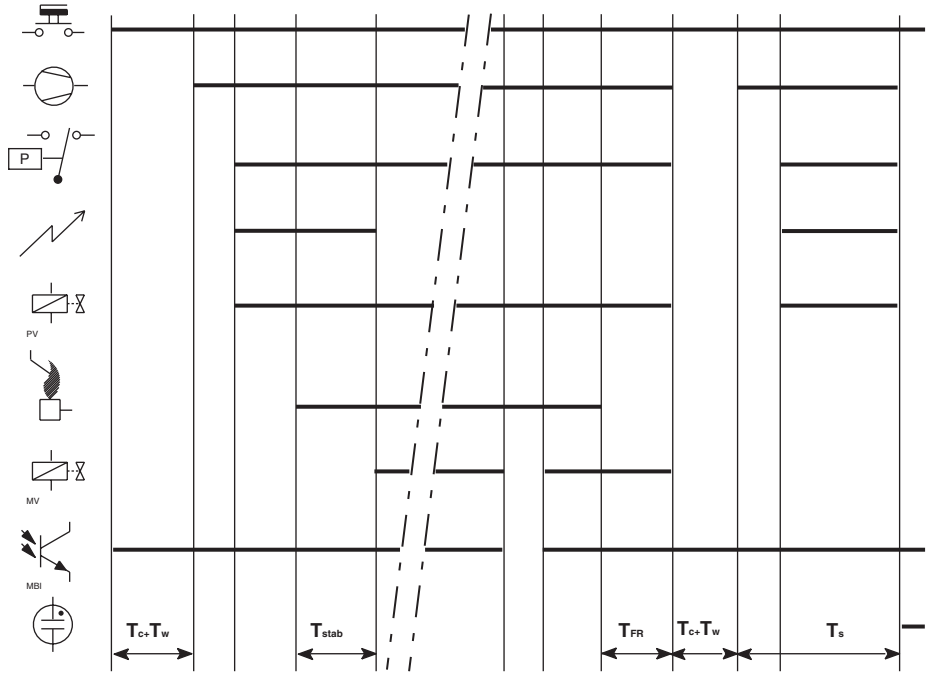

Fig. 48. Timing diagram S4565DF and TF with external main burner interrupt in fan assisted applications

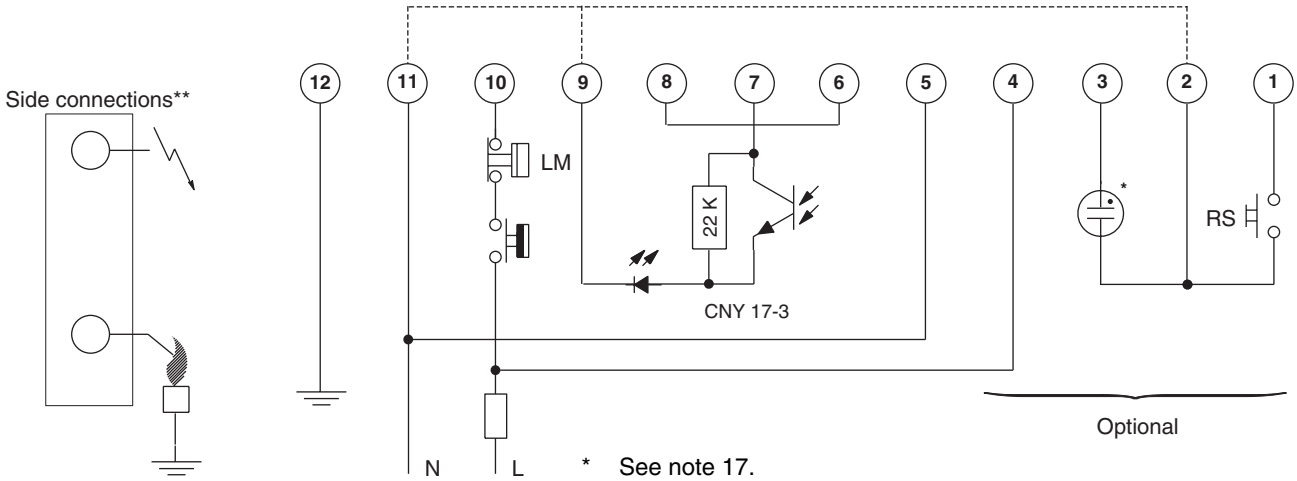

* See note 17.

** Alternative side connection for models with combined flame detection/high voltage. See page 56. Fig. 71.

Fig. 49. Connection diagram S4565DF, TF with external main burner interrupt in atmospheric applications

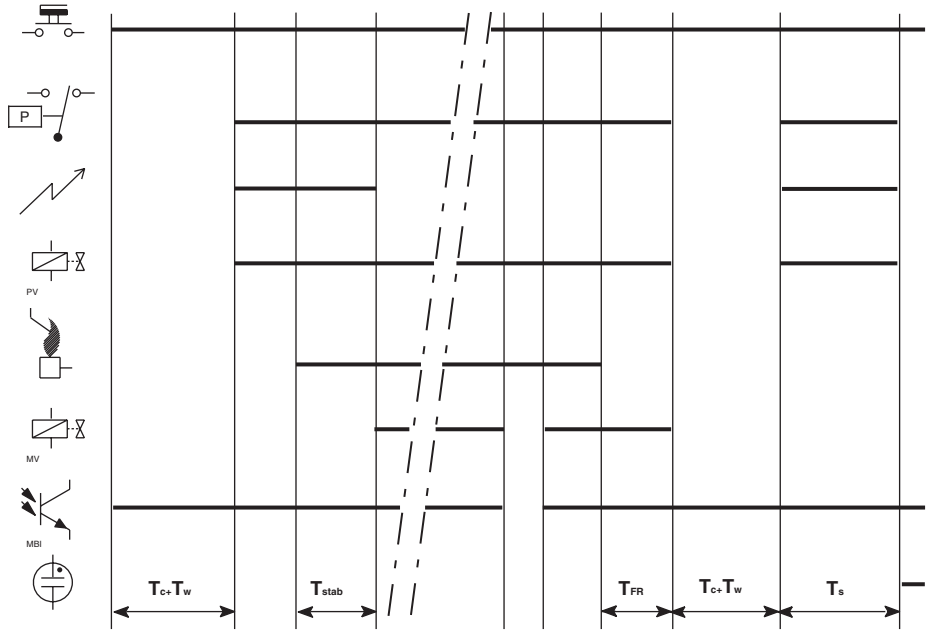

Fig. 50. Timing diagram S4565DF and TF with external main burner interrupt in atmospheric applications

General
The S4565PV, QV, RV, TV are multitrial volatile ignition controls in accordance with EN 298. The S4565RV and TV are fan assisted versions with or **without prepurge**, (reset by means of interrupting the permanent live or by a reset switch). Non volatile lock-out of S4565PV, QV, and S4565RV, TV **without prepurge** are obtained if the status output is used to store the lock-out status in the comfort boiler control e.g. with the use of EEPROM. (see Fig. 58.)

The alternative S4565RV, TV versions **with prepurge** option do not contain an independent manual reset function, (reset by means of interrupting the heat demand).

Model

Suffix PV:	atmospheric, direct burner ignition, volatile lock-out
Suffix QV:	as PV but with status or flame relay output
Suffix RV:	fan assisted, direct burner ignition, volatile lock-out
Suffix TV:	as RV but with with status or flame relay output

Supply voltage
230 Vac, 50/60 Hz

Power consumption
4 VA

Humidity
90% RH max. at 40°C

Ambient temperature
-15 ... 60°C

Electrical rating (see also note 19.)

Fan:	230 Vac, 50/60 Hz, max 1 A, max cos φ > 0.6
Flame relay contact:	230 Vac, 50/60 Hz, max 1 A, cos φ > 0.6
Gas valve:	210 Vdc, 50 mA
Reset switch:	15 Vdc, 200 mA, **live part!!!!!**
Status opto coupler:	open collector +5 V, 10 kΩ logic “1“ = 0 V logic “0” = 5 V “50 Hz” = block signal between 0 V and 5 V with about 50% duty cycle.
External igniter (optional):	suitable for AC1A199.01 only, 230 Vrac 6 mA, **not accessible (IP 00)**

Electrical connection

High voltage spark:	2.8 mm spade terminal
Flame sensing:	4.8 mm spade terminal
PCB connectors:	Molex 3003 series suitable for Molex 3001 female cable connector
Gas valve:	intended for use onto VK41.. series gas controls

⚠ CAUTION

VK41.. gas control needs to be properly earthed by means of the external faston connection on the top of the gas control.

Housing (degree of protection)
See:

accessories for degree of protection page 7..
replacement parts and accessories page 66..

Timing (depending on O.S. number)

Self check time (T_c):	0 ... 2 s
Waiting time (T_w):	0 ... 15 s
Prepurge time (T_p):	0 ... 15 s
Safety time (T_s):	3 ... 10 s
Number of start trials:	1, optional 2 or 3; 2 or 3 only in combination with appropriate waiting or prepurge time

Flame sensing

Min flame current for phase dependent systems:	0.9 ∝A
Response time on:	> 0.2 s
Response time off (T_{FR}):	< 1 s

Ignition

Spark voltage:	> 15 kV at 40 pF load (depending on O.S. number)
Spark energy:	5 ... 15 μAs (depending on O.S. number)
Repetition rate:	15 Hz
Maximum spark gap:	3.5 mm

Length flame sensing cable
1 m max.

Length ignition cable
0.5 m max.

Length of wiring for external components
1 m max.

Remark
Optional integrated flame relay available with safe separation or opto coupler with safe separation according EN 60730.

⚠ WARNING

Opto coupler interface needs a debounce time > 500 ms in order to prevent noise caused by transients on mains or by status transitions.

Opto coupler status output

- After heat demand during waiting time (T_w) or prepurge time (T_p) the status signal must be logic “0”.
- After the waiting time (T_w) and without flame the status signal must be logic “1”.
- After flame detection the status signal must be “50 Hz”.
- If after the safety time (T_s) there is no flame detection, the ignition control goes to volatile lock-out. The status signal is logic “0”.
- If high limit (LM) opens during operation the status signal becomes logic “0”. The ignition control makes a restart but the status signal stays logic “0” during the safety time (T_s). This is the high limit indication status. The ignition control goes to volatile lock-out. The comfort boiler control has to store this status in a semi permanent memory in order to achieve non volatile lock-out. Line voltage interruptions may not cause data loss.

Table 1. Status output

Normal sequence	“0” - “1” - “50 Hz”
No flame sequence	“0” - “1” - “0”
High limit sequence during retrial	“0” - “0” - “0”

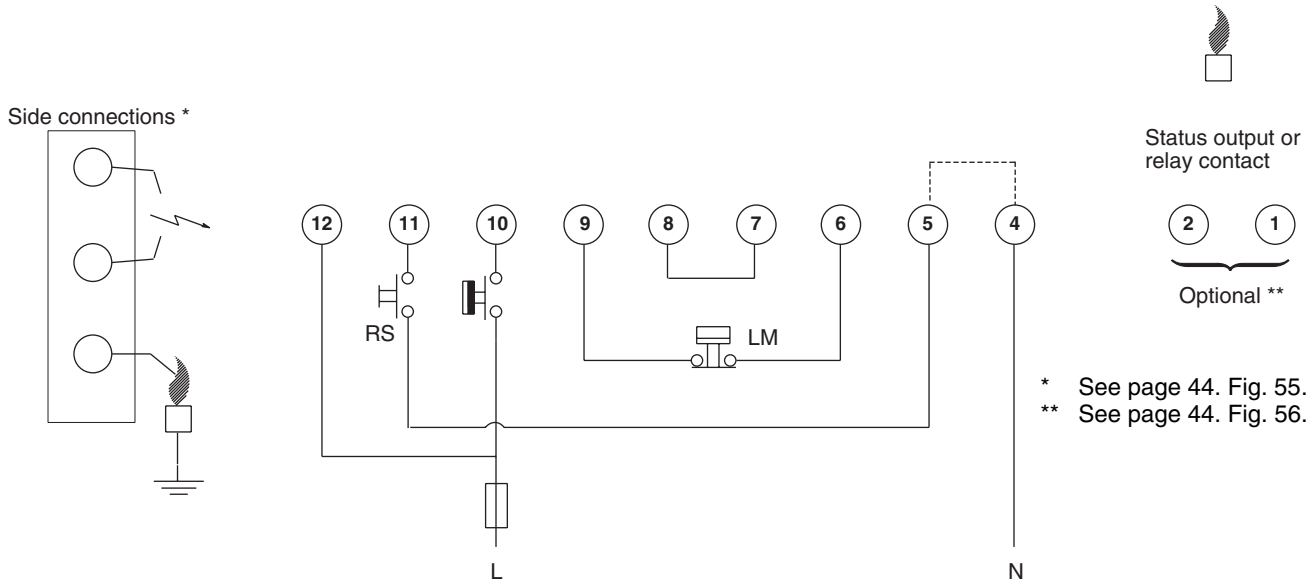

Fig. 51. Connection diagram S4565PV and QV series or connection diagram S4565RV and TV series wired in atmospheric applications

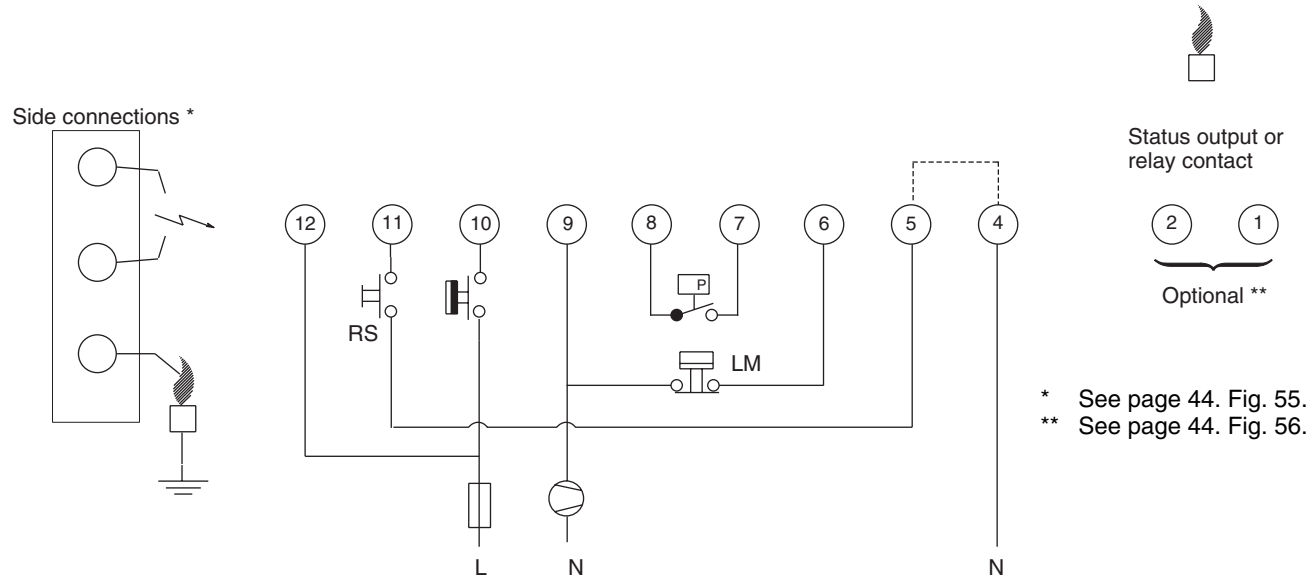

Fig. 52. Connection diagram S4565RV and TV series

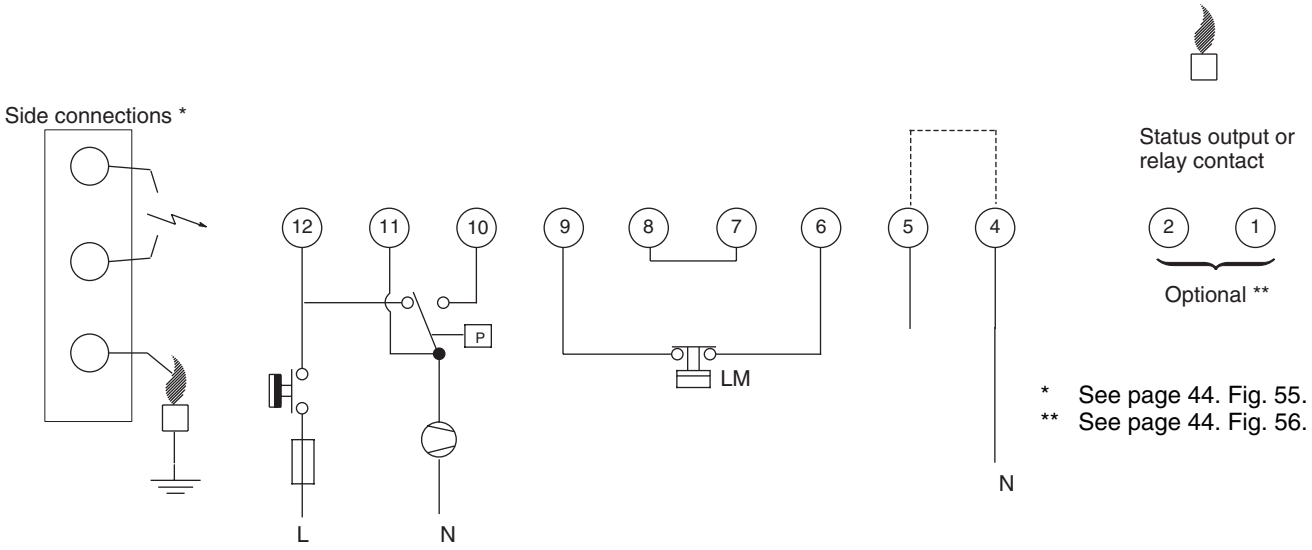

Fig. 53. Connection diagram S4565RV and TV with prepurge option

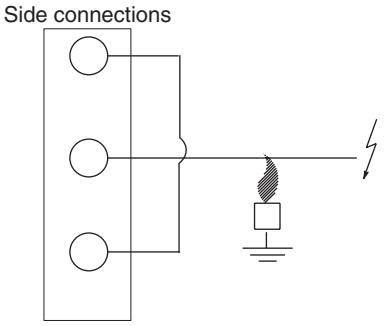

Fig. 54. Alternative side connection in case of combined flame sensing and sparking

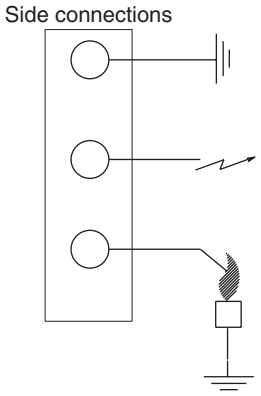

Fig. 55. Alternative side connection in case of sparking to ground

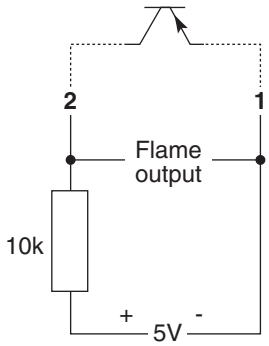

Fig. 56. Connection for opto coupler output

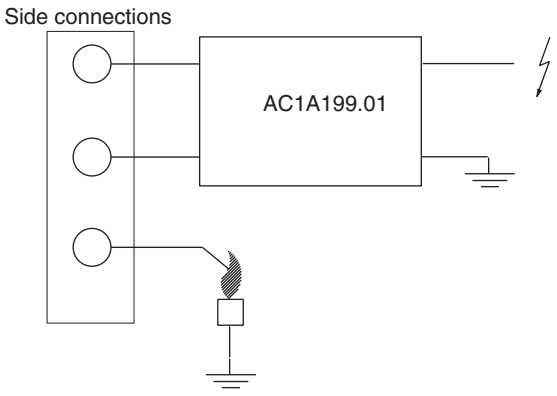

Fig. 57. Alternative side connection for external AC1A199.01 igniter

General
The S4565PV, QV, RV, TV ignition controls can provide closed-loop sparking, sparking to ground or combined sparking and flame sensing.

Lock-out reset
The S4565PV, QV, RV, TV ignition controls can be reset by interrupting the permanent live or by pressing the reset button for at least 1 s.
The S4565RV, TV versions with prepurge can be reset by interrupting the heat demand for at least 1 s.
The application of this type of control is therefore restricted to those applications where resetting by switching off the heat demand is allowed by European appliance standards. Reset of an appliance in lock-out must occur by means of a conscious manual action and not by means of automatic devices like thermostats or timers.

NOTE 19.: If permanent alarm output:neon indicator with integral resistor >150 kΩ (max 1 mA)

Suffix PV (see Fig. 59.)
When there is a call for heat a self check period (T_c) plus waiting period (T_w) elapse before the built-in igniter and gas valve are switched on.
The ignition spark ignites gas and resulting flame is detected by the flame rod.
After flame establishing a predetermined, extended ignition time can be included.
If flame is not established within the safety time (T_s), the ignition control locks out or makes a restart depending on the number of start trials.
If the flame is lost during normal run, the ignition control repeats start sequence.

Suffix QV (see Fig. 60.)
As PV except flame relay contact or opto coupler is activated after flame detection.

Suffix RV (see Fig. 61.)
When there is a call for heat a self check period (T_c) elapses if the air proving switch is in the no air position.
After T_c the fan starts running.
When sufficient air flow is proven by the air proving switch, the built-in igniter and gas valve are switched on.
The ignition spark ignites gas and resulting flame is detected by the flame rod.
After flame establishing a predetermined, extended ignition time can be included.
If flame is not established within the safety time (T_s), the ignition control locks out or makes a restart depending on the number of start trials. This is including dynamic air check.
If the flame is lost during normal run, the ignition control repeats start sequence.
If no air is proven by the air proving switch, the ignition control stays waiting (optional lock-out on no air can be included).

Suffix TV (see Fig. 62.)
As RV except flame relay contact or opto coupler is activated after flame detection.

Suffix RV with prepurge (see Fig. 63.)
When there is a call for heat the fan starts running through the no air position of the air proving switch.
When sufficient air flow is proven by the air proving switch, a self check period (T_c) plus a prepurge period (T_p) elapse before the gas valve and the built-in igniter are switched on.
The ignition spark ignites gas and resulting flame is detected by the flame rod.
Ignition is switched off.
After flame establishing a predetermined, extended ignition time can be included.
If flame is not established within the safety time (T_s), the ignition control locks out or makes a restart at prepurge depending on the number of start trials.
If the flame is lost during normal run, the ignition control repeats start sequence at prepurge.
If no air is proven by the air proving switch within the prepurge time (T_p) the ignition control stays in waiting mode with fan running.

Suffix TV with prepurge (see Fig. 64.)
As RV with prepurge except flame relay contact or opto coupler is activated after flame detection.

STATUS OUTPUT APPLICATION

The lock-out status data from the S4565PV, QV, RV, TV ignition controls can be read by the microprocessor in the comfort boiler control and stored in its EEPROM.

The relay contact is controlled by the microprocessor and activates the S4565PV, QV, RV, TV.

During the start sequence the status output gives status information of the S4565PV, QV, RV, TV.

The status information can be found under chapter SPECIFICATIONS paragraph:“Opto coupler status output” on page 41
If the signal of the status output does not correspond to the specifications, the comfort boiler control can shut off the ignition control.

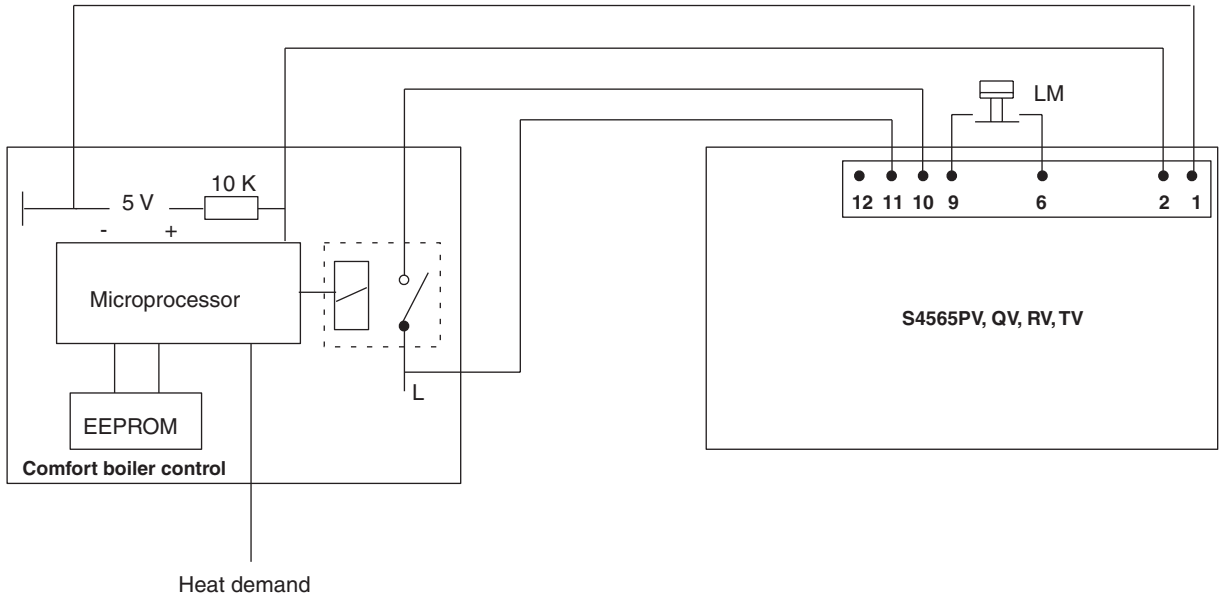

Fig. 58. Status output application

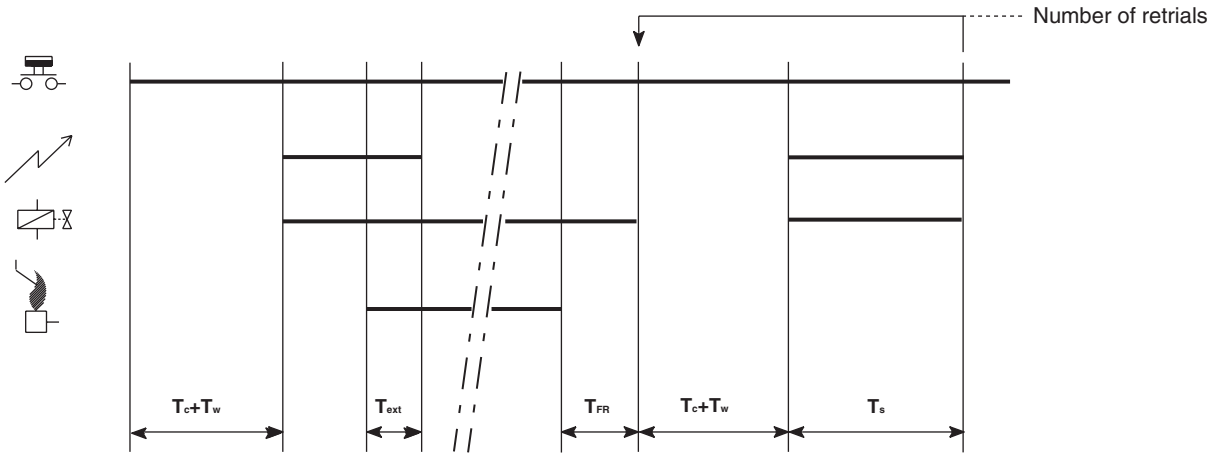

Fig. 59. Timing diagram S4565PV series

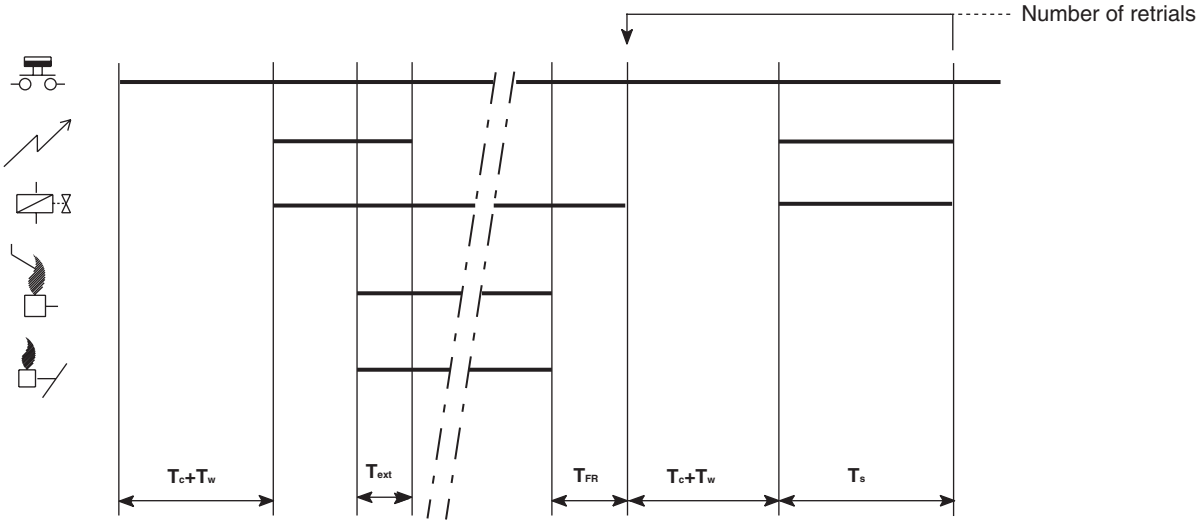

Fig. 60. Timing diagram S4565QV series

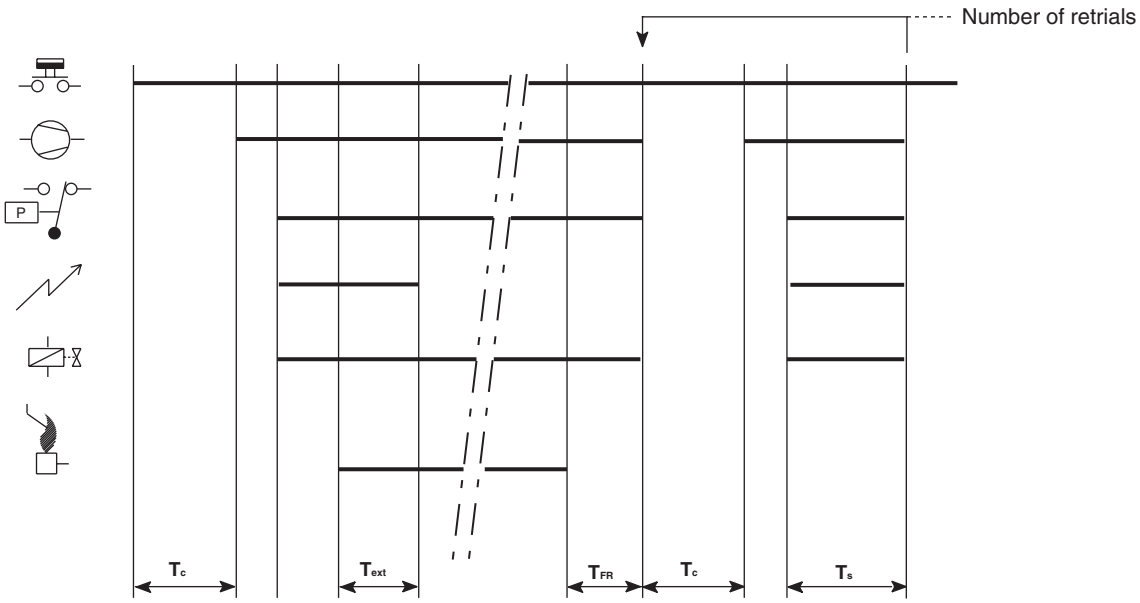

Fig. 61. Timing diagram S4565RV series

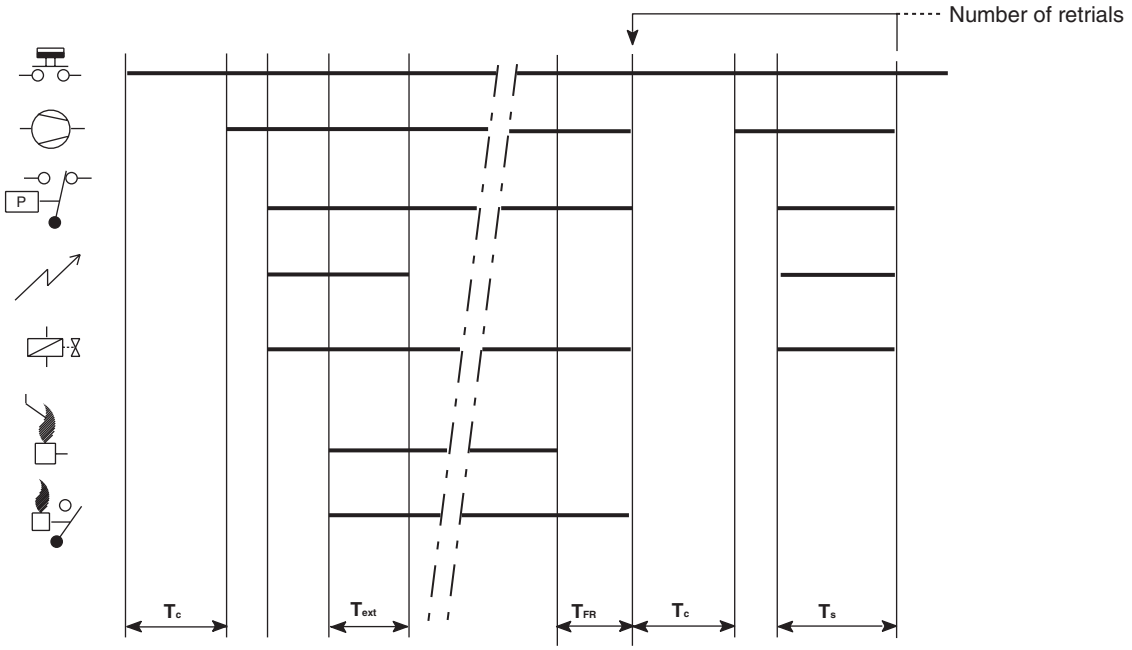

Fig. 62. Timing diagram S4565TV series

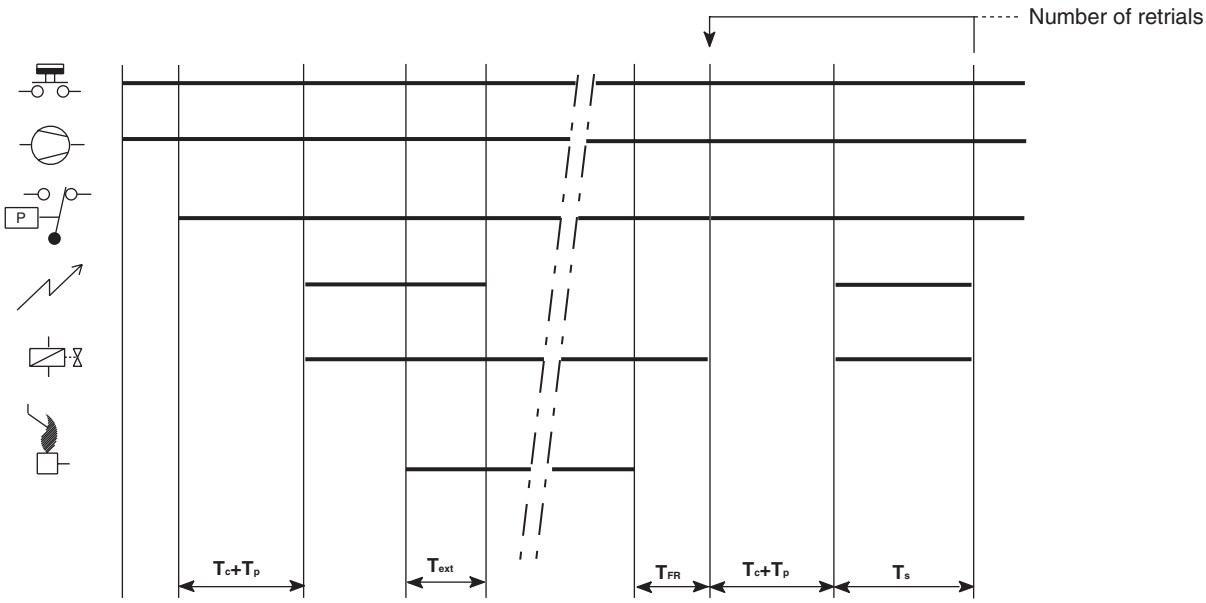

Fig. 63. Timing diagram S4565RV with prepurge

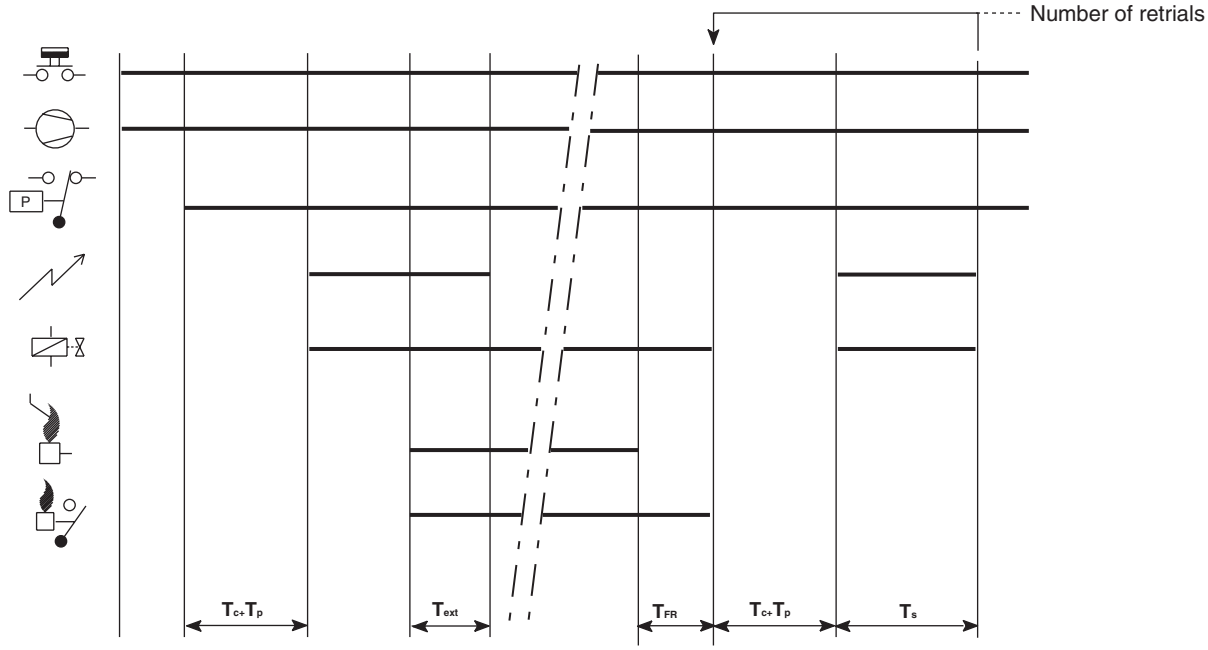

Fig. 64. Timing diagram S4565TV with prepurge

Model
Suffix A: atmospheric, direct burner ignition
Suffix B: as A but with flame relay output
Suffix P: as A except volatile lock-out
Suffix Q: as B except volatile lock-out

Supply voltage
230 ... 240 Vac, 50/60 Hz (-15%, +10%) or
110 ... 120 Vac, 50/60 Hz (-15%, +10%)

Power consumption
4 VA

Humidity
90% RH max. at 40°C

Ambient temperature
0 ... 60°C

-15 ... 60°C (optional)

Electrical rating (see also note 21.)

Alarm:	230 ... 240 Vac, 50/60 Hz or 110 ... 120 Vac, 50/60 Hz max 1 mA
Flame relay contact:	230 ... 240 Vac, 50/60 Hz or 110 ... 120 Vac, 50/60 Hz , 1 A, cos φ > 0.6
Flame opto coupler:	+5 V, 10 kΩ

Electrical connection

Hot surface ignition relay:	2.8 mm spade terminal
Flame sensing:	4.8 mm spade terminal
PCB connectors:	Molex 3003 series suitable for Molex 3001 female cable connector

Housing (degree of protection)
See:
accessories for degree of protection page 7..
replacement parts and accessories page 66..

Timing (depending on O.S. number)

Self check time (T_c):	1.5 s
Glowing time (T_g):	0 ... 30 s
Safety time (T_s):	3.5 ... 25 s
Extended ignition time(T_{ext}):	0 ... T_s (depending on elaps of safety time)

Flame sensing

Min flame current:	
for optional phase independent versions:	0.5 μA
for phase dependent versions:	0.9 μA
Response time on:	> 0.2 s
Response time off (T_{FR}):	< 1 s

Hot surface ignition

Free contact:	230 ... 240 Vac, 2 A, cos φ = 1 24 Vac, 2 A, cos φ = 1 110 ... 120 Vac, 2 A, cos φ = 1

⚠ WARNING

Hot **S**urface **I**gniter (HSI) needs to be supplied from a floating winding of a transformer in order to quarantee reliable flame detection.

Length flame sensing cable
1 m max.

Length of wiring for external components
1 m max.

Remark
Optional integrated flame relay available with safe separation or opto coupler with safe separation.
N.C. contact of flame relay has no safe separation.

⚠ WARNING

Opto coupler interface needs a debounce time > 20 ms in order to prevent noise caused by transients on mains.

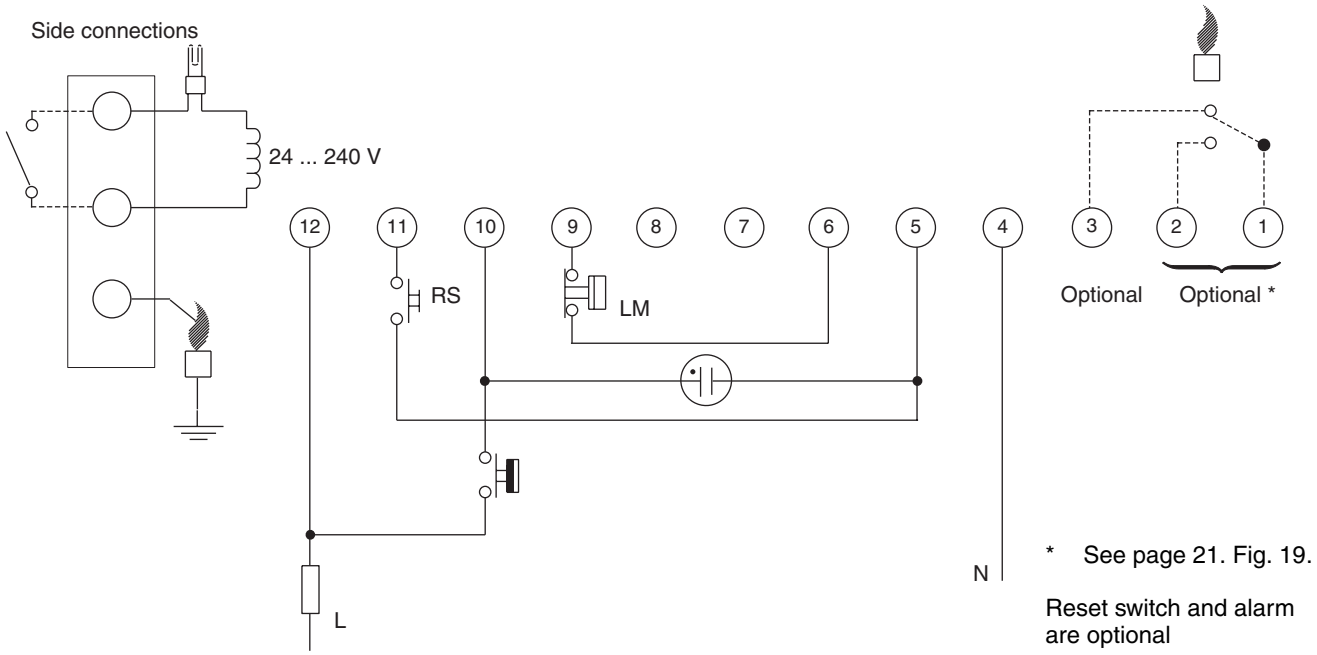

Fig. 65. Connection diagram S4575A, B, P and Q

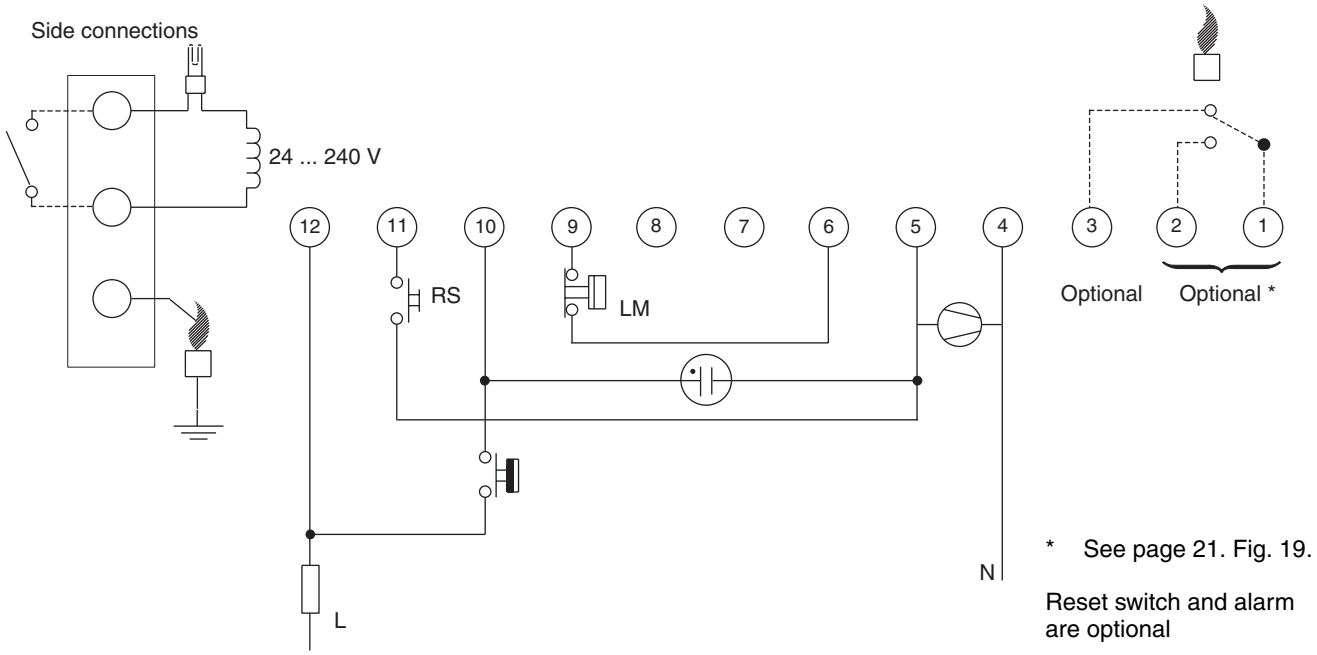

Fig. 66. Connection diagram S4575A, B, P and Q for gas/air application

General
The S4575A, B, D, P ignition controls can provide hot surface ignition.
The **H**ot **S**urface **I**gniter (HSI is connected to a floating winding of a transformer (see figFig. 65.).

Lock-out reset
The ignition control can be is reset by either depressing the internal/external reset button (suffix A and B) or by interrupting the permanent life (suffix P and Q).

NOTE 20.: If during normal use the reset button is pressed, the gas valves close and the ignition control starts a new sequence after releasing the reset button.

NOTE 21.: If permanent alarm output: neon indicator with integral resistor >150 kΩ (max 1 mA)
Do not connect any electrical load to the heat demand input, it will influence proper functionality.

Suffix A and P (see Fig. 67.)
When there is a call for heat the HSI starts glowing during glowing time (T_g).
After the glowing time (T_g) the gas valve is switched on.
The igniter ignites gas and resulting flame is detected by the flame rod.
After flame establishment a predetermined, extended ignition time can be included.
If flame is not established within the safety time (T_s), the ignition control locks out.
If the flame is lost during normal run, the ignition control repeats start sequence.

Suffix B and Q (see Fig. 68.)
As suffix A and P except flame relay contact is closed after flame detection.

Gas/air application
For gas/air application without dynamic aircheck, the S4565AD, BD, PD or QD can be used.
In this application the fan is connected between pin 4 and 5 and will start when a call for heat is present. The waiting period now acts as a prepurge time.
When the call for heat disappears or when the ignition control goes in lock-out, the fan will be switched off.

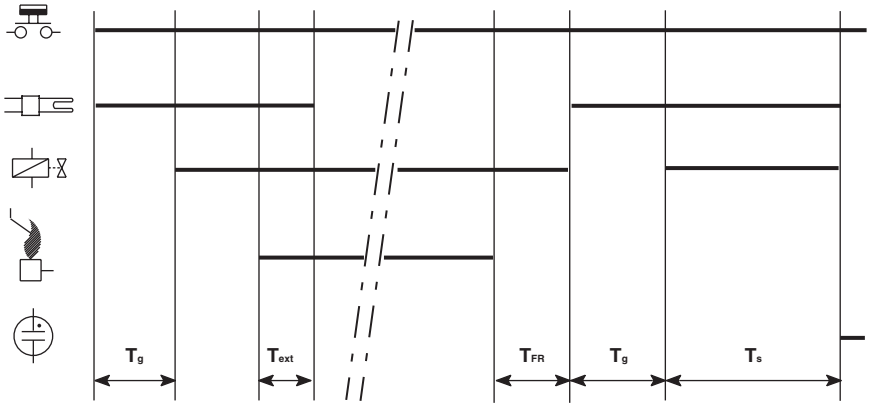

Fig. 67. Timing diagram S4575A, P

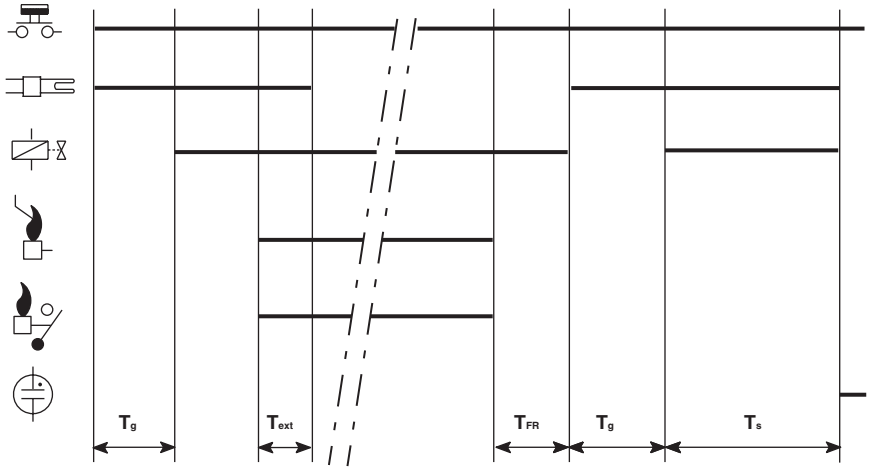

Fig. 68. Timing diagram S4575B, Q

SPECIFICATIONS S4585D

Model
Suffix D: fan assisted, intermittent pilot burner ignition

Supply voltage
220 ... 240 Vac, 50/60 Hz (-15%, +10%)

Power consumption
4 VA

Humidity
90% RH max. at 40°C non condensing

Ambient temperature
0 ... 60°C

Electrical rating

Fan:	220 ... 240 Vac, 50/60 Hz, 1 A, cos φ > 0.6
No flame indicator:	220 ... 240 V, 1 mA max

Electrical connection

High voltage spark/flame sensing single rod:	2.8 x 0.5 mm spade terminal
PCB connectors:	Molex 3003 series suitable for Molex 3001 female cable connector

Housing (degree of protection)
See:
accessories for degree of protection page 7..
replacement parts and accessories page 66..

Timing (depending on O.S. number)

Self check time (T_c):	1.5 s
Safety time (T_s):	infinite

Flame sensing

Min flame current:	1.0 $\propto$A
Response time on:	> 0.2 s
Response time off (T_{FR}):	< 1.0 s
Phase-Phase mains trafo input:	220 ... 240 > 0.1 VA

Ignition

Spark voltage:	12 kV at 40 pF load (depending on O.S. number)
Repetition rate:	1 ... 4 Hz
Max spark gap:	3.5 mm

Length ignition and flame sensing cable
0.5 m max.

Length of wiring for external components
1 m max.

Recommended flame sensor
Q371/Q385 ”2000 series”/Q389/Q395 intermittent ignition pilot burner

Maximum pilot burner output
250 Watt

No flame indicator

Required impedance:	> 100 kΩ

No flame indication time

T_{NF}:	> 10 s

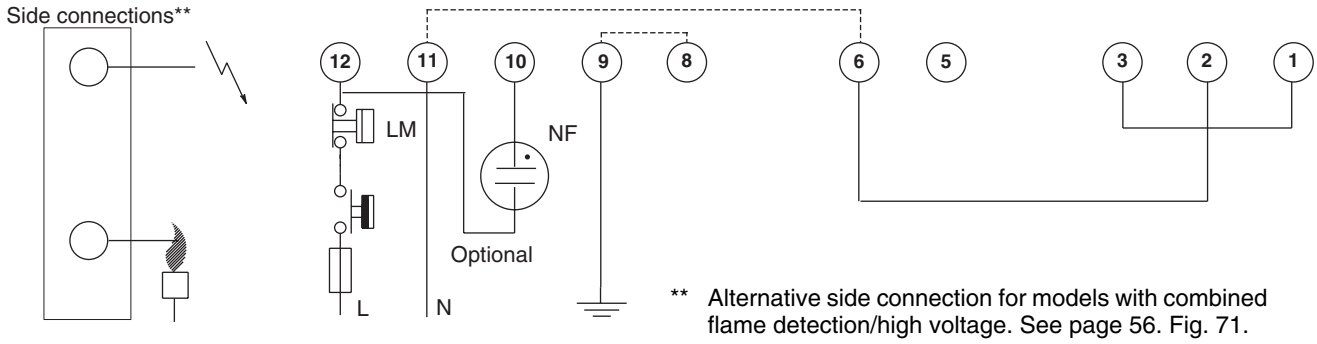

Fig. 69. Connection diagram S4585D wired up in atmospheric application

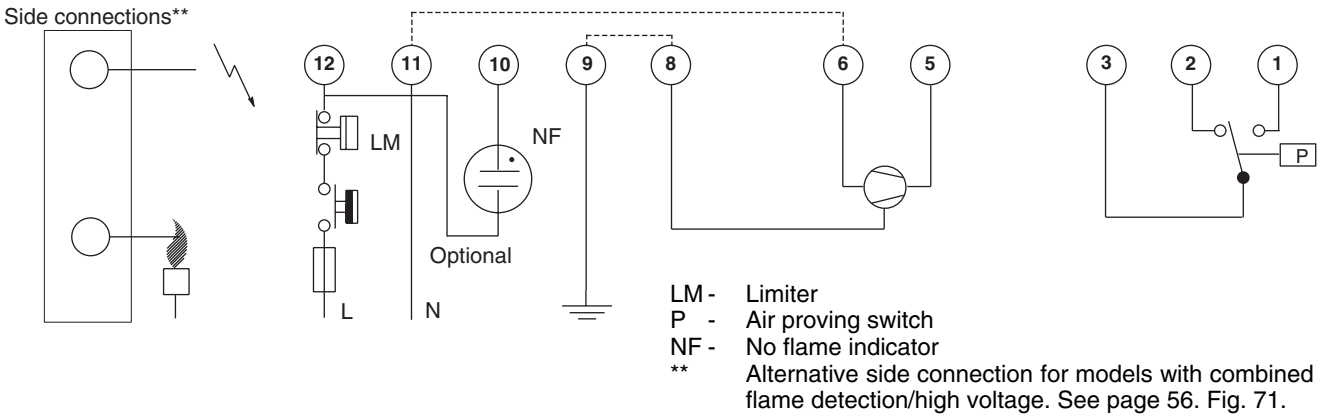

Fig. 70. Connection diagram S4585D wired up in fan assisted application

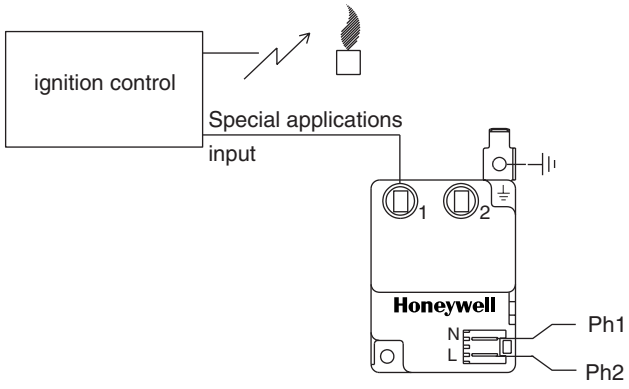

Fig. 71. Alternative side connection for models with combined flamedetection/high voltage using AT7030A flame detection transformer.

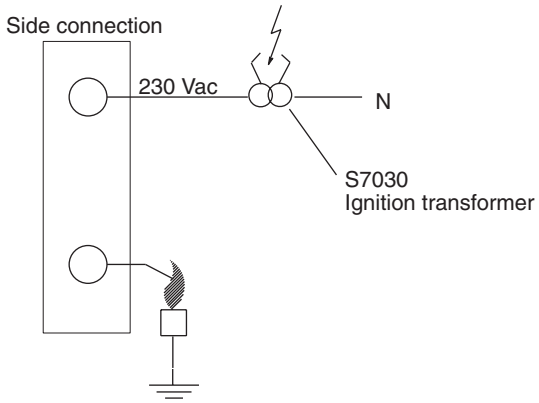

Fig. 72. Alternative side connection for models with flame sense input + 230Vac output for external ignition transformer S7030

Atmospheric ignition control S4585D (see Fig. 73.)
After false flame check during self check time (T_c) a built-in igniter and pilot gas valve are switched on.
The ignition spark ignites gas and resulting flame is detected by the combined flame/ignition rod.

Ignition is switched off immediately after flame is established and main gas valve is then energized.

If the flame is lost during normal run, the main gas valve is de-energized and re-ignition of pilot occurs.

Fan assisted ignition control S4585D (see Fig. 73.)
When there is a call for heat, fan is energized through no air position of air proving switch after self check time (T_c).

When sufficient air flow is proven by air proving switch, a built-in igniter and pilot gas valve are swiched on.

The ignition spark ignites gas and resulting flame is detected by the combined flame/ignition rod.

Ignition is switched off immediately after flame is established and main gas valve is then energized.

If air flow is not proven by air proving switch automatic ignition controller will remain in a waiting mode with fan energized.

If the flame is lost during normal run, the main gas valve is de-energized and re-ignition of pilot occurs.

No flame indication
If no flame indication is built in, the indicator ligths up if there is no flame detection within the no flame indication period (T_{NF})

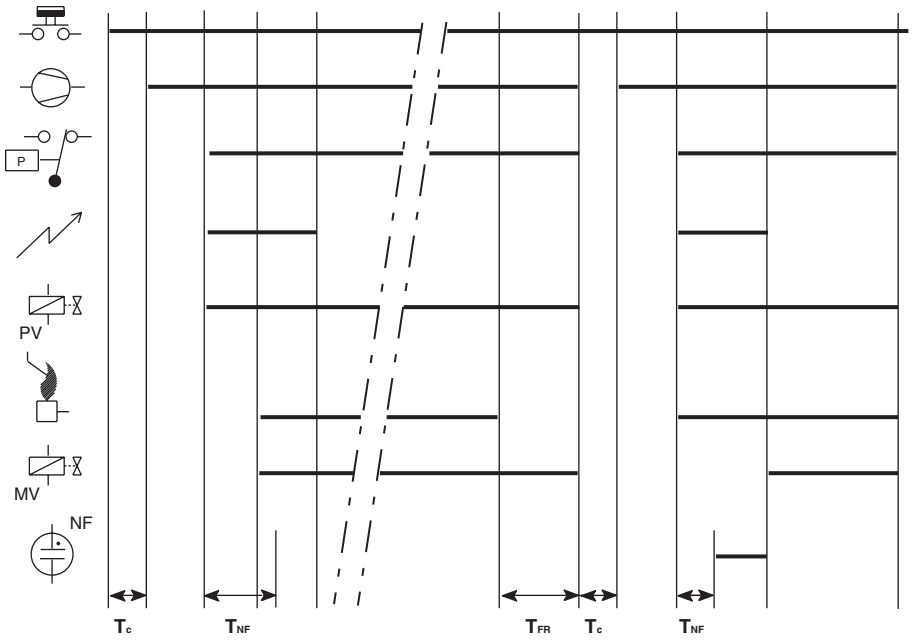

Fig. 73. Timing diagram S4585D

GENERAL CONSIDERATIONS

To ensure reliable long term operation, mount ignition control at a position in the appliance with a low ambient temperature and a low radiation.
The ignition control should be externally fused.
High temperatures will affect product life.
After installation wait at least 1 hour before connecting to mains.

NOTE 22.: Electrical rating of connected controls and air proving switch should be appropriate for the load that is switched by the ignition control.

NOTE 23.: Power interruptions will cause program restart.

NOTE 24.: The flame connection pin of all types is protected against electrical schock. The gas pressure switch as mentioned in this instruction sheet is a functional device.

NOTE 25.: If the ignition control incorporates an EMC filter, disconnect the ignition controller from mains before performing a dielectric strength test.

⚠ WARNING

Honeywell is not responsible for damage, injury due to mis wiring.

After installation the ignition control can become wet due to condensation.
Do not connect wet device to mains

EMC GUIDELINES

The ignition cable has to be determined for lowest emission.
Do not lead ignition cable close to other cabling.
To suppress Radio Frequency Interference (RFI) the ignition control including spark igniter cabling should be mounted in sufficient shielded environment.

ELECTRICAL CONNECTIONS AND WIRING

IMPORTANT

Take care that installer is a trained experienced service person.
Disconnect power supply to prevent electrical shock and/or equipment damage.
Turn off gas supply before starting installation.
Wiring must be in accordance with local regulations.
The appliance manufacturer's instructions should always be followed.
Before installing or replacing any control check that type number is correct for the application.
Ensure combustion chamber is free of gas before start up.
Conduct a thorough check out when installation is completed.
At the first start the ignition controller can be in lock out; depress reset button to free control.

CAUTION

Do not connect the ignition control to power supply when it is not connected to the gas control.

Wiring

- Use cable which can withstand 105°C ambient.
- Use cable which is proven against moisture.
- Wiring between ignition control and spark sensing probe should have good quality insulation, suitable for the temperatures encountered.

CAUTION

If ignition frequency q 25 Hz or pulse energy > 45 μAs the ignition cable and its connections shall have a protection against electrical shock hazard.
For single rod applications, the ignition/sensing cable and its connections shall have protection against electrical shock hazard.
Label all wires prior to disconnection when servicing ignition controls. Wiring errors can cause improper and dangerous operation.
If electronics components are installed in an area subject to water (dripping, spraying, rain etc.), means shall be provided to protect these components.
Flame relay output is not accessible when the normally closed output is present.

Fusing

In order to prevent unsafe conditions at too high current, the ignition controls have an integral non replaceable fuse.
This fuse will be blown long before the maximum 16 A external fuse switches off.

Spark gap

Max. allowable spark gap 3.5 mm

Supply voltage polarity

WARNING

If ignition control ***(without the phase neutral independent operation feature)*** seems to operate normally but does not detect flame, check for right polarity of power supply (line, neutral).

Checking flame current

- The minimum value should be in accordance with specified value.
- To check flame current connect a dc micro-Ampèremeter between flame sensing wire and flame sensing rod.
- Meter connections polluted with e.g. alkaline substances lying close to earth can cause flame current simulation. Make sure no false flame current can flow from meter connections to earth.
- If flame current is insufficient check that the flame sensing rod is fully enveloped by the flame and that burner and ignition control are reliable grounded.
- If there is no sufficient flame current due to phase-phase mains it is recommended to use an ignition control with the phase neutral independent operation feature. If this is not available, it is recommended to use a AT7030A or AT7030B flame detection transformer. See also instruction sheet EN1R-9136 for the AT7030 transformer.

Flame sensing wiring

The S4565/S4575 and S4585 ignition controls are equiped with flame sensing by ionisation current based on the flame rectification principle.
Via a high ohmic source a high voltage is applied to the flame rod.
Because of the high impedance the flame rod connection is safely accesible according to EN 60730.
Since the flame sensing input is very sensitive and the current detection threshold is only a few tenths of microamp, care must be taken that no spurious current flows.
The flame rod wire must have creepage to earth of at least 10 mm.
Contacts of the flame rod wire must not be imposed to fluids or dirt.

WARNING

Short μA meter during ignition, to prevent damage of the μA meter in single rod application.

QUALITY ASSURANCE STATEMENT

Products are manufactured under an ISO 9001 (1994) based and certified Quality System.

The quality system is described in the Honeywell Combustion Controls Center Quality Assurance Programme and its related operational procedures and instructions.

The quality system is approved by Gastec against certificate number 9.302/2.

The quality organisation is responsible for defining, maintaining, improving and verification of the quality systems in the field of design, production process and field quality service.

Assembly processes are guided by work instructions. Patrol inspections form part of the assembly processes.

Assembly inspection is performed by employees of the quality control department, using their own authorised equipment.

All inspections (incoming and assembly) are performed by trained personel and according inspection procedures.

STANDARDS AND APPROVALS

Standards

The ignition control has been designed to meet the european standards:

- EN 298: Automatic gas burner control systems.
- EN 60730-1: Automatic electric controls for household and simular use.

Regarding electric safety, the ignition control can be used in appliances according to eurpean standard for household electrical requirements EN 60335 series

The S4565/S4575 ignition controls are approved on the North American standard ANSI Z21.20 Automatic Ignition Systems.

S4565, S4575 and S4585 systems function in accordance with EN 298.

S4565A, B ..... code A/M/C/L/X/N
S4565C ..... code F/M/C/L/X/N
S4565D ..... code F/T/C/L/X/N
S4565P,Q ..... code A/M/C/V/X/N
S4565R ..... code F/M/C/V/X/N
S4565T ..... code F/T/C/V/X/N
S4565AD,BD ..... codeA/M/C/L/X/N
S4565CD,DD ..... code F/M/C/L/X/N
S4565PD,QD ..... code A/M/C/V/X/N
S4565RD,TD ..... code F/M/C/V/X/N
S4565AF ..... code A/M/C/L/X/N
S4565BF ..... code A/T/C/L/X/N
S4565CF ..... code F/M/C/L/X/N
S4565DF ..... code F/T/C/L/X/N
S4565PF ..... code A/M/C/V/X/N
S4565QF ..... code F/M/C/V/X/N
S4565RF ..... code A/T/C/V/X/N
S4565TF ..... code F/T/C/V/X/N
S4575A, B ..... code A/M/C/L/X/N
S4575C, D ..... code F/M/C/L/X/N
S4575P, Q ..... code A/M/C/V/X/N
S4575R, T ..... code F/M/C/V/X/N
S4585D ..... code F/T/R/R/X/N or A/T/R/R/Y/N

NOTE: S4565SD is not an ignition control but an ignition circuit and rectifier only

Approvals

The ignition control conforms with the following EC - Directives:

- Gas Appliance Directive (90/396/EEC)
- Low Voltage Directive (73/23/EEC)
- Electro Magnetic Compatability Directive (89/336/EEC)*

* Conformity with Electro Magnetic Compatibility Directive regarding emission for non industrial appliances can be assumed for selected O.S. numbers only. However conformity can only be declared as part of the appliance.

For other O.S. numbers, additional suppression means may be needed within the appliance.

Details per O.S. number can be found in the Approvals List.

Regarding immunity, all controls comply with the levels for non industrial appliances.

ORDERING INFORMATION

When ordering specify:

- Model number of CVI ignition components required: see model number chart below.
- The correct pilot burner for the installation concerned: refer to Honeywell ignition products guide EN0R-0038.
- Order numbers of replacement parts and accessories required.

NOTE: Ignition controls, replacement parts and accessories will be available under ”TRADELINE” label. Ask your wholesaler for details.

NOTE: An up-to-date product survey, with details of all new and existing products in these series, is available. Contact your local Honeywell sales representative for more information.

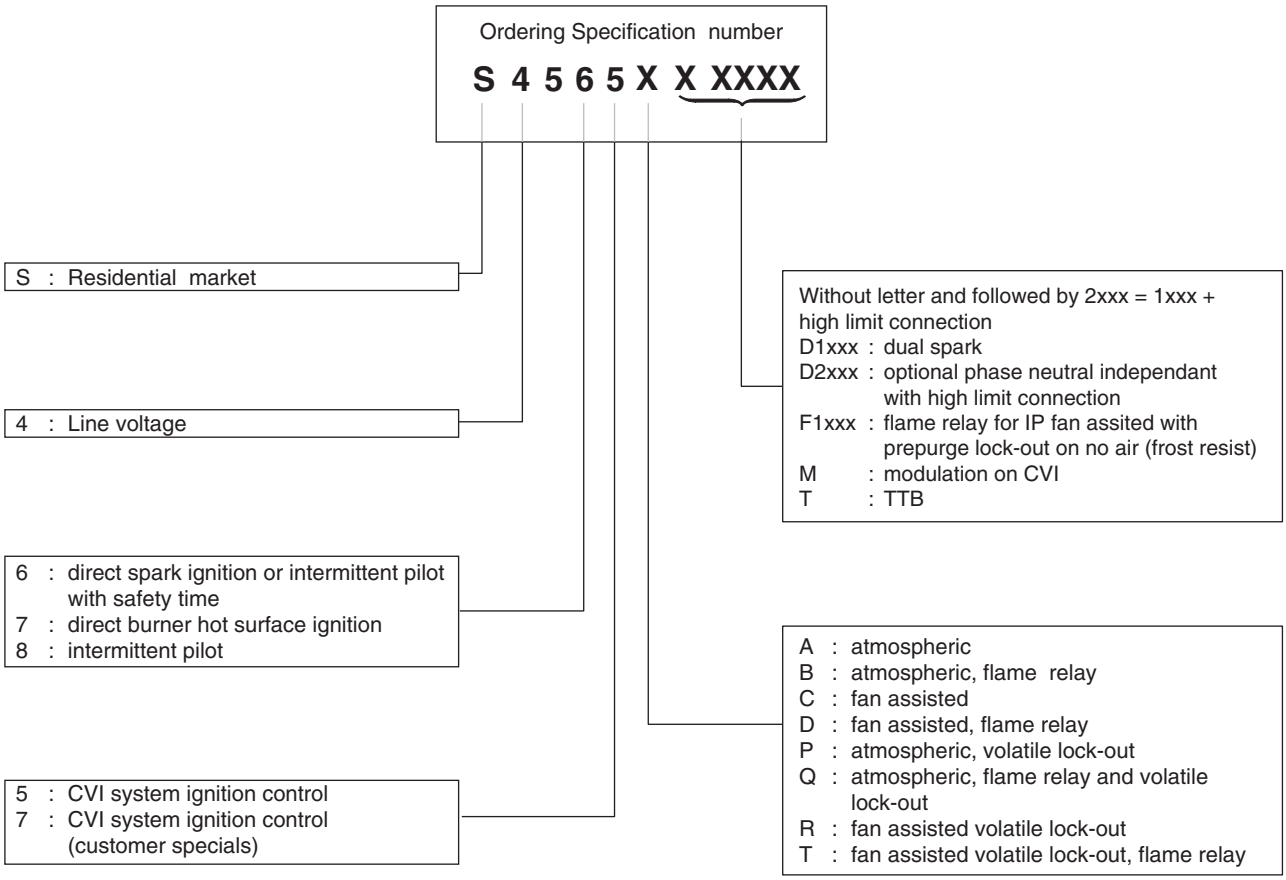

Fig. 74. Model number chart

OVERVIEW IGNITION CONTROLS

Model	Suffix	Application	Safety time	Atmospheric	Fan assisted	Flame relay or flame opto output	Lock-out
S4565	A	DBI	Yes	Yes	-	No	Non volatile
S4565	B	DBI	Yes	Yes	-	Yes	Non volatile
S4565	P	DBI	Yes	Yes	-	No	Volatile
S4565	Q	DBI	Yes	Yes	-	Yes	Volatile
S4565	AD	DBI	Yes	Yes	-	No	Non volatile
S4565	BD	DBI	Yes	Yes	-	Yes	Non volatile
S4565	CD	DBI	Yes	-	Yes	No	Non volatile
S4565	DD	DBI	Yes	-	Yes	Yes	Non volatile
S4565	PD	DBI	Yes	Yes	-	No	Volatile
S4565	QD	DBI	Yes	Yes	-	Yes	Volatile
S4565	RD	DBI	Yes	-	Yes	No	Volatile
S4565	TD	DBI	Yes	-	Yes	Yes	Volatile
S4565	AF	DBI	Yes	Yes	-	No	Non volatile
S4565	BF	IP	Yes	Yes	-	No	Non volatile
S4565	C/CF	DBI	Yes	-	Yes	No	Non volatile
S4565	D/DF	IP	Yes	-	Yes	No	Non volatile
S4565	PF	DBI	Yes	Yes	-	No	Volatile
S4565	PV/QV	DBI	Yes	Yes	-	Yes	Volatile
S4565	QF	IP	Yes	Yes	-	No	Volatile
S4565	R/RF	DBI	Yes	-	Yes	No	Volatile
S4565	RV/TV	DBI	Yes	-	Yes	Yes	Volatile
S4565	T/TF	IP	Yes	-	Yes	No	Volatile
S4575	A/B	DBI	Yes	Yes	-	No	Non volatile
S4575	P/Q	DBI	Yes	Yes	-	No	Volatile
S4585	D	IP	No	Yes	Yes	No	-

REPLACEMENT PARTS AND ACCESSORIES

Description	Packing quantity	Ordernumber
Cover with screw	192	45.900.431-004
Cover with screw (flame retardant according to UL94-V0)	192	45.900.431-005
Cover without screw (flame retardant according to UL94-V0)	192	45.900.431-006
Strain relief	192	45.900.440-001
Grommet up to 4 cables	192	45.900.442-008
Grommet with wire feed	100	45.900.442-010
Sleeve for sealing spark electrode and flame detector	192	45.900.442-003

CABLE ASSEMBLIES

Description	Packing quantity	Ordernumber
Molex cable for S4565A,B,P,Q	50	45.900.419-023
Molex cable for S4565C,D,R,T	50	45.900.419-029
Molex cable for S4585D	50	45.900.419-025
Molex cable for S4565AD,BD,DD,PD,QD,RD,SD,TD	50	45.900.419-022
Molex cable for S4565C,D,R,T and S4565AF,BF,CF,DF,EF,PF,QF,RF,TF	50	45.900.419-024
Molex cable for: S4565AD,BD,DD,PD,QD,RD,TD “2000-series” S4565BM,DM S4565PV.QV,RV,TV and S4575A,B,P,Q	50	45.900.419-033
Molex cable for S4565AD and PD “2000” series	50	45.900.419-034

Honeywell

Home and Building Control
Combustion Control Center Europe
Honeywell BV
Phileas Foggstraat 7
7821 AJ Emmen
The Netherlands
Tel.: +31 (-)591 695911
Fax: +31 (-) 591 695200