Satronic catalogue



Control boxes for oil burners



Control boxes for gas burner



Flame senors



Control boxes for special applications and accessoirs



Components for burners



Maintenance and teste quipment

General items

ПРОМЭЛЕКТРОНИКА / sales@prom-elec.com

GENERAL ITEMS

Distributors

Typelist oil

Typelist gas

Approvals oil

Approvals gas

CE approvals

Cross reference list oil

Cross reference list gas

CONTROL BOXES FOR OIL BURNERS < 30 KG/H

- TF 801/801.2 TF 802/802.2
- TF 804/804.2
- TF 830.3 TF 832.3
- TF 834.3 TF 836.3
- TF 840
- TF 844.3
- TF 974/976
- DKO 970/972
- DKO 974/976 (N)

CONTROL BOXES FOR OIL BURNERS > 30 KG/H

- TTO 872/876
- MMO 872/876
- MMD 900.1
- TMO 720-4
- DKW 972/976
- DMO 976

CONTROL BOXES FOR GAS BURNERS

- TFI 812
- MMI 810.1/811.1
- MMI 812
- MMI 813.1
- MMI 815
- MMI 816
- MMI 962.1
- MMG 810.1/811.1
- TMG 710-3
- TME 780
- SGU 930 SGU 930i
- DKG 972
- DMG 970
- DMG 971
- DMG 972
- DMG 973

FLAME SENSOR

- IRD 810/820
- IRD 1010
- IRD 1020
- UVD 970/971

CONTROL BOXES FOR SPECIAL APPLICATIONS AND ACCESSOIRS

- SOG 960 / SOZ 960
- MDP 720-1
- UPR 770
- FFW 930
- FR 870/MR 880
- SFA 970

COMPONENTS FOR BURNERS

SOVE 930

SOVU 930

ZT 8..

ZT 870

ZT 900

ZT 930

ZT 931

MAINTENANCE AND TESTE QUIPMENT

- US 7900
- US 7910
- US 93..
- UP 800
- UP 7.. / 75..
- UP 940
- Ionimeter
- SatroPen
- Prüftraverse

Distributoren
Distributors

ARGENTINIEN Argentina	Honeywell Inc 480 Sawgrass Corporate Parkway Suite 200 Sunrise FL 33325	Tel. (00954) 845-2600 Fax (00954) 845-2605
AUSTRALIEN Australia	Honeywell Ltd. 5 Thomas Holt Drive North Ryde NSW 2113	Tel. (0061) 2 9353 7000 Fax (0061) 2 9353 8207
BELGIEN Belgium	C. E. V. A. I. ETS Rue J. B. Janssen 39 B-1080 Bruxelles	Tel. (0032) 2 410 25 45 Fax (0032) 2 410 36 16
BRASILIEN Brazil	Honeywell Inc 480 Sawgrass Corporate Parkway Suite 200 Sunrise FL 33325	Tel. (00954) 845-2600 Fax (00954) 845-2605
DÄNEMARK Denmark	Honeywell A/S Automatikvej 1 DK-2860 Soeborg	Tel. (0045) 3 955 55 55 Fax (0045) 3 955 55 51
ENGLAND United Kingdom	Satronic Controls UK Ltd. P.O. Box No. 4 GB-Bracknell-Berks. RG12 3SP	Tel. (0044) 1 344 483 035 Fax (0044) 1 344 487 908
FINNLAND Finland	Honeywell OY Ruukintie 8 SF-02320 Espoo 32	Tel. (00358) 9 348 01 01 Fax (00358) 9 348 012 34
FRANKREICH France	Sauermann industrie 15, Rue Jean-Moulin F-77348 Pontault-Combault	Tel. (0033) 1 602 851 53 Fax (0033) 1 602 918 61
INDIEN India	Tata Honeywell Ltd. 55-A / 8 & 9 Hadapsar Industrial Estate Hadapsar, Pune-411 013 India	Tel. (0091) 2 126 755 32 Fax (0091) 2 126 759 92
IRAN Iran	Dimex Iran Vali-E-Asr. Damanafshar Street No. 13/2 IR-Tehran	Tel. (0021) 8 796 376 Fax (0021) 8 797 930
ISRAEL Israel	M. Joffe Techno-Thermo Engineering P.O. Box 36048 IL-61360 Tel Aviv	Tel. (0097) 2 356 036 54 Fax (0097) 2 356 604 87
ITALIEN Italy	Honeywell S.p.A. Via P.Gobetti, 2/b 20063 Cernusco Sul Naviglio (Milano)	Tel. (0039) 2 921 46 1 Fax (0039) 2 921 46 888
JAPAN Japan	Matake Sangyo Co., Ltd. 1-70 Hanshin Ryutu Center Yamaguchi-cho J-65114 Nishinomiya-City	Tel. (0081) 7 890 416 16 Fax (0081) 7 890 416 17
KOREA Korea	LG-Honeywell Co., Ltd 17F, Kukje Center Building 191, Hanganro-2 Ga, Yongsan-Gu Seoul 140-702 Korea	Tel. (0082) 2 799 60 11 Fax (0082) 2 792 90 11
NEUSEELAND New Zealand	Honeywell Ltd. 5 Thomas Holt Drive North Ryde NSW 2113	Tel. (00954) 845-2600 Fax (00954) 845-2605

NIEDERLANDE Netherlands	Honeywell B.V. attn. Satronic Postbus 12683 NL-1100 AR Amsterdam Z.O.	Tel. (0031) 20 5 65 63 39 Fax (0031) 20 5 65 63 90
NORWEGEN Norway	Fremo A.S. Postboks 38 N-3291 Stavern	Tel. (0047) 331 998 66 Fax (0047) 331 990 53
SCHWEIZ Switzerland Headquarters	Satronic AG Brüelstrasse 7 CH-8157 Dielsdorf	Tel. (0041) 1 855 22 11 Fax (0041) 1 855 22 22
SCHWEDEN Sweden	Honeywell AB Storsatragrand 5 S-127 86 Skarholmen	Tel. (0046) 8 775 55 00 Fax (0046) 8 775 56 00
SPANIEN Spain	Iberex Climatic S.A. Camí del Mig, 41 (Pol. Ind. Pla d'en Coll) E-08110 Montcada i Reixac (B)	Tel. (0034) 3 564 81 11 Fax (0034) 3 564 40 12
SÜDAFRIKA South Africa	Honeywell Southern Africa (Pty) Ltd 62 Milpark Centre Koeberg Roed Milnerton 7441 Republic of South Africa	Tel. (0027) 21 551 76 40 Fax (0027) 21 551 76 44
THAILAND Thailand	Honeywell Systems (Thailand) Ltd 252/121 25th Floor, Unit A Muang Thai-Phatra Office, Tower II Ratchadapisek Road, Huay Khwang Bangkok 10320 / Thailand	Tel. (0066) 2 693 30 99 Fax (0066) 2 693 30 85
TSCHECHIEN Czech Republic	RS Brno spol. s.r.o. Krokova 70 CZ-61500 Brno	Tel. (0042) 054 521 12 50 Fax (0042) 054 521 12 50
TÜRKEI Turkey	Honeywell Turkey A.S. Emirhan Cad No 145 Barbaros Plaza C Blok Kat 18 Dikilitas 80700 Istanbul	Tel. (0090) 212 258 18 30 Fax (0090) 212 259 04 65
URUGUAY Uruguay	Honeywell Inc 480 Sawgrass Corporate Parkway Suite 200 Sunrise FL 33325	Tel. (00954) 845-2600 Fax (00954) 845-2605
UNGARN Hungary	Honeywell Flamtronic Dózsa Gy. u. 147 H-8800 Nagykanizsa	Tel. (0036) 93 518 920 Fax (0036) 93 518 928
USA / CAN / Mexiko / Zentral Amerika	Honeywell Inc Home and Building Control Golden Valley Plant 1985 Douglas Drive North Golden Valley MN 55422-3992	Tel. (00612) 951-1000 Fax (00612) 954-4500
Singapore & Asia Pacific Regional Headquarters	Honeywell Southeast Asia Honeywell Automation College Block 750E Chai Chee Road #06-01 Chai Chee Industrial Park Singapore 469005 Rep of Singapore	Tel. (0065) 355 2828 Fax (0065) 445 3033
BRD Federal Republic of Germany Reparatur-Auslieferungslager	Satronic AG z. Hd. Spedition Wolffgramm Lenzburgerstrasse 12¨ D-79761 Waldshut	Tel. (0049) 7 751 43 09 Fax (0041) 1 855 22 84

Distributoren
Distributors

satronic
A Honeywell Company

Satronic AG
Brüelstrasse 7
Postfach 324
CH-8157 Dielsdorf

SATRONIC - Control boxes for oil burners

Type	Model	max. firing rate		appr. for direct-air-heaters	action on flame failure		with built in remote reset	with air-damper control	pre-purge	pre-ignition	max. safety time (sec.)	post-ignition (sec.)	delay for 2nd stage	size (box with bas) L x W x H			Possible flame sensors						Notes
		below 30 kg/h	above 30 kg/h		direct lockout	re-cycle								86 x 60 x 63	86 x 60 x 91	102 x 102 x 120	FZ 711 G / S	MZ 770 S	IRD 810	IRD 910	IRD 911	IRD 1010	
TF 801		x				x			12	12	10	20	-	x			x		x	x		x	
TF 801 B		x				x			12	12	15	20	-	x			x					x	version for the UK, 240 V
TF 802.1		x				x			12	12	10	2-4	20	x			x		x	x		x	
TF 802 B		x				x			12	12	15	2-4	20	x			x					x	version for the UK, 240 V
TF 804		x				x			12	12	10	3-5	40	x			x			x		x	for use with oil pre-heater (with override contact)
TF 830.1		x				x			12	12	10	20	-	x				x	x		x	x	
TF 830 B		x				x			12	12	15	20	-	x				x				x	version for the UK, 240 V
TF 832.1		x				x			12	12	10	2-5	20	x				x	x		x	x	
TF 832 B		x				x			12	12	15	2-5	20	x				x				x	version for the UK, 240 V
TF 834.1		x				x			12	12	10	20	-	x				x	x		x	x	for use with oil pre-heater (with override contact)
TF 834 E.1		x				x			12	12	10	-	-	x				x			x	x	for use with oil pre-heater (with override contact)
TF 834.2		x				x			12	12	10	20	-	x				x	x		x	x	low-voltage prokoted according EN 230
TF 836		x				x			12	12	10	2-4	20	x				x			x	x	for use with oil pre-heater (with override contact)
TF 840		x				x			12	12	10	25	3-5	x				x			x	x	
TF 844		x				x			12	12	10	3-5	3-5	x				x			x	x	for use with oil pre-heater (with override contact)
MMD 900					x	x			15	2	5	15.5	17.5		x						x	x	for SATRONAIR burner components only
MMD 900.1					x	x			15	15	5	20	52		x							x	for mainly blue-burning flames
TTO 872.2			x	x		x			20	20	5	2-4	40	x				x			x	x	
TTO 876.2			x	x		x			20	20	5	2-4	40	x				x			x	x	for use with oil pre-heater (with override contact)
MMO 872			x	x	x				24	24	5	8	40		x			x			x	x	
MMO 876			x	x	x				24	24	5	8	40		x			x			x	x	for use with oil pre-heater (with override contact)
TMO 720 - 4	15		x	x	x	x	x	x	10	30	5/1	8	12			x	x		x			x	
TMO 720 - 4	15 OE		x	x	x	x	x	x	10	10	5/1	8	12			x	x		x			x	
TMO 720 - 4	35		x	x	x	x	x	x	30	30/2	5/1	8	12			x	x		x			x	

The types on this page are no longer available

SATRONIC - Control boxes for oil burners

Type	Model	max. firing rate		appr. for direct-air-heaters	action on flame failure		with built in remote reset	with air-damper control	pre-purge	pre-ignition	max. safety time (sec.)	post-ignition (sec.)	delay for 2nd stage	size (box with bas) L x W x H			Possible flame sensors						Notes
		below 30 kg/h	above 30 kg/h		direct lockout	re-cycle								86 x 60 x 63	86 x 60 x 91	102 x 102 x 120	FZ 711 G / S	MZ 770 S	IRD 810	IRD 910	IRD 911	IRD 1010	
TF 701 - 1		x				x			12	12	10	18	18		x		x		x	x			
TF 701 B						x			12	12	15	20	20		x		x						version for the UK, 240 V
TF 704		x				x			12	12	10	18	-		x		x		x	x			for use with oil pre-heater
TF 714 - 1		x				x			12	12	10	2	18		x		x						
TF 721						x			30	30	10	18	18		x		x						according to Hungarian norm
TF 730 - 1		x				x			12	12	10	18	18		x			x	x				
TF 730 - 2		x				x			12	12	10	2-4	18		x			x					
TF 733		x				x			12	12	10	-	18		x			x					
TF 734		x				x			12	12	10	18	-		x			x	x				for use with oil-preheaters (with override contact)
TF 734 - 2		x				x			12	12	10	-	-		x			x	x				for use with oil-preheaters (with override contact)
TF 740 - 1		x				x			12	12	10	18	2-5		x		x						
TF 742						x			5	5	10	20	20		x		x						110 V
TF 821		x				x			30	30	10	25	-	x				x					according to the Hungarian norm, no longer available
TF 822		x				x			30	30	10	2-4	25	x				x					according to the Hungarian norm
TFI 734		x				x			30	30	10	25	-		x		x			x	x		for Blueburner with oil-preheater
TFI 734 - 2		x				x			25	25	10	25	25		x		x			x	x		for Blueburner with oil-preheater
TTO 810	35		x	x		x			30	30	5	20	20		x		x		x				no longer available
TTO 810	35 R		x	x		x	x		30	30	5	20	20		x		x						no longer available
TTO 810 B	35			x		x			30	30	5	20	20		x		x						version for the UK, 240 V, no longer available
TTO 836	35		x	x		x			30	30	5	20	20		x			x					for use with oil pre-heater, no longer available

SATRONIC - Control boxes for gas-burners

Type	model	appr. for direct-air-heaters	appr. for oil- and gas operation	action on flame failure		with built in remote reset	with air-damper control	ignition spark supervising	waiting time at start position	pre-purge (sec.)	pre-ignition (sec.)	safety time (sec.)				post-ignition (sec.)	delay for valve 1	delay for valve 2	size (box with base) L x W x H			possible flame sensors								Notes
				direct lockout	re-cycle							pilot valve	start valve	valve 1	flame failure				86 x 60 x 63	86 x 60 x 91	102 x 102 x 120	Ionisation	UVZ 780 blue	UVZ 780 white	UVZ 780 red	UVZE/FZE 780	IRD 820	IRD 920	IRD 1020	
TFI 812.2	10	x			x					-	10			10	1	-		20	x			x					x	x	x	for atmosph. gas burners
TFI 812.2	5	x			x					-	15			5	1	-		20	x			x					x	x	x	for atmosph. gas burners
TFI 812 B	10				x				12	-	-			10	1			20				x					x	x	x	version for the UK, 240 V
TFI 812 B	5				x				12	-	-			5	1			20				x					x	x	x	version for the UK, 240 V
MMI 810	32			x					9	30	3,5			2	1	1,5		12		x		x					x	x	x	version for Italy
MMI 810	33	x	x	x					9	30	3,5			3	1	2,5		12		x		x					x	x	x	
MMI 810	35	x	x	x					9	30	3,5			5	1	4,5		12		x		x					x	x	x	
MMI 810	45			x					5	40	-			5	1	4,5		12		x		x					x	x	x	version for the UK, 240 V
MMI 810	310			x					9	30	3,5			10	1	9,5		15		x		x								
MMI 810	40-34	x		x					-	40	-	5		5	1	4.5		10		x		x								version for the Netherlands
MMI 811	35			x					9	30	3,5			5	1	4,5		12		x		x					x	x	x	
MMI 811	63			x					5	60	3,5			3	1	2,5		7		x		x					x	x	x	version for the Netherlands
MMI 812	33	x		x			x		5	63	3,5			3	1	2,5		7		x		x					x	x	x	
MMI 812	63			x					5	95	6,4			3	1	2,5		-				x					x	x	x	version for the Netherlands
MMI 815	5			x					17	-	4	-	-	5	1	4	-	15		x		x					x	x	x	for atmosph. gas burners
MMI 815	10			x					17	-	4	-	-	10	1	9	-	15		x		x					x	x	x	for atmosph. gas burners
MMI 816				x					15	-	3	10	-	10	1	10	7	-		x		x								version for the Netherlands
MMG 810	32	x	x	x				x	9	40	2			2	1	1		7		x		x			x		x	x	x	version for Italy
MMG 810	33	x	x	x				x	9	40	2			3	1	2		7		x		x			x		x	x	x	
MMG 810	45		x	x					5	40	-			5	1	4,5		10		x		x			x		x	x	x	version for the UK, 240 V
MMG 811	33			x					5	30	3,5			3	1	2,5		10		x		x			x		x	x	x	version for Switzerland, with safty valve
MMG 811	63			x					5	60	3,5			3	1	2,5		7		x		x			x		x	x	x	version for the Netherlands

SATRONIC - Control boxes for gas-burners

Type	model	appr. for direct-air-heaters	appr. for oil- and gas operation	action on flame failure		with built in remote reset	with air-damper control	ignition spark supervising	waiting time at start position	pre-purge (sec.)	pre-ignition (sec.)	safety time (sec.)				post-ignition (sec.)	delay for valve 1	delay for valve 2	size (box with base) L x W x H			possible flame sensors								Notes
				direct lockout	re-cycle							pilot valve	start valve	valve 1	flame failure				86 x 60 x 63	86 x 60 x 91	102 x 102 x 120	Ionisation	UVZ 780 blue	UVZ 780 white	UVZ 780 red	UVZE/FZE 780	IRD 820	IRD 920	IRD 1020	
TMG 740-2	32-32	x	x	x		x	x	x	-	30	3	3	2	2	1	2,2	9	6			x	x	x	x			x	x	x	
TMG 740-2 F	32-32	x	x	x		x	x	x	-	30	3	3	2	2	1	2,2	9	6			x		x	x						version France
TMG 740-2	45-54	x	x	x		x	x	x	-	40	3	5	5	4	1	4,2	10	10			x	x	x	x			x	x	x	version for the UK
TMG 740-3	32-32	x	x	x		x	x	x	-	30	3	3	2	2	1	2,2	9	6			x	x	x	x	x		x	x	x	
TMG 740-3	63-55	x	x	x		x	x	x	-	60	4	5	3	5	1	4,2	10	20			x	x	x	x	x		x	x	x	version for the Netherlands
TMG 740-3	12-22	x	x	x						10	1	2	2	2	1	2	3	3			x	x	x	x	x		x	x	x	
TMA 740-1	10-58			x		x			-	-	12	5	-	10	1	5	-				x	x								for atmospheric gas burners
TME 780	32-52		x	x		x	x	x	-	30	2/30	5	2	2	1	4,4	9	2			x	x				x				appr. for continuous operation
SGU 930 (i)	33-33	x	x	x		x	x	x	-	30	3.5	3	3	3	1	2	9	6			x	x	x	x	x		x	x	x	with Infosystem

Control boxes for oil burners

O currently under test approved Δ certified

Country		EU	D					CH	GB	NL	A	F	I
Type	Model	EC-P.I.N.	DIN Rg. Nr.	valid until...	DVGW Nr.	valid until...	appr.for DAH						
TF 801			12842/90	11/95									
TF 801.2			5F071/95	02/00									
TF 801 B									Δ				
TF 802 B									Δ				
TF 802.1			12773/90	11/94									
TF 802.2			5F072/95	02/00									
TF 804			12762/89	09/94									
TF 804.2			5F073/95	02/00									
TF 821													
TF 822													
TF 830 B									Δ				
TF 830.1			12774/90	11/94									
TF 830.2			5F074/95	04/04									
TF 830.3			5F176/99	02/00									
TF 832 B									Δ				
TF 832.1			12775/90	11/94									
TF 832.2			5F075/95	02/00									
TF 832.3			5F177/99	04/04									
TF 834.1			12776/90	11/94									
TF 834.2			5F037/93	07/98									
TF 834.3			5F178/99	04/04									
TF 834 E.1			12788/90	10/95									
TF 834 E.2			5F076/95	02/00									
TF 834 E.3			5F179/99	04/04									
TF 836.1			12830/89	07/94									
TF 836.2			5F077/95	02/00									
TF 836.3			5F180/99	04/04									
TF 840			12778/90	11/94									
TF 844			12779/90	11/94									
TF 844.2			5F078/95	02/00									
TF 844.3			5F181/99	04/04									
TF 974			5F148/98	01/03									
TF 974 E			5F162/98	12/03									
TF 976			5F149/98	01/03									
DKO 970			5F140/97	11/02									
DKO 972			5F141/97	11/02									
DKO 974			5F142/97	11/02									
DKO 974 N			5F143/97	11/02									
DKO 976			5F144/97	11/02									
DKO 976 N			5F145/97	11/02									
TTO 836	35		12843/91W	01/96			x						
TTO 872.2			5F031/93	06/98			x						
TTO 876.2			5F030/93	06/98			x						
MMO 872			5F062/94	09/99			x						
MMO 876			5F063/94	09/99			x						
DKW 972			5F146/97	11/02			x						
DKW 976			5F147/97	11/02			x						
DMO 976			5F163/98	12/03			x						
MMD 880			12834/89W	11/94									
MMD 900			12856/915	09/96			x						
MMD 900.1			5F022/93	04/98			x						

Control boxes for oil burners

O currently under test approved Δ certified

Country		EU	D					CH	GB	NL	A	F	I
Type	Model	EC-P.I.N.	DIN Rg. Nr.	valid until...	DVGW Nr.	valid until...	appr.for DAH						
TMO 720-4	35		5F017/97	12/02			x		Δ				
IRD 810			Δ										
IRD 910			Δ										
IRD 911			Δ										
IRD 1010			Δ										
UVD 970													
ZT 801								Δ					
ZT 900								Δ					

Approvals

satronic
A Honeywell Company

Satronic AG
Brüelstrasse 7
Postfach 324
CH-8157 Dielsdorf

Control boxes for gas burners

O currently under test approved Δ certified

Country		EU	D					CH	GB	NL	A	F	I
Type	Model	EC-P.I.N.	DIN Rg. Nr.	valid until...	DVGW Nr.	valid until...	appr.for DAH						
TFI 812 B	5												
TFI 812 B	10												
TFI 812.2	5	63AO6850			92.01 f SR	03/97	x						
TFI 812.2	10	63AO6850			92.02 f SR	03/97	x						
TFI 812.2 E	10	63AO6850			94.03 f SR	10/99	x						
TFI 812.2 B	5	63AO6850											
TFI 812.2 B	10	63AO6850											
TFI 812.3	5	63AO6850											
TFI 812.3	10	63AO6850											
TFI 812.3 B	5	63AO6850											
TFI 812.3 B	10	63AO6850											
SKG 960	520	63AS1588											
SCM 970		63AS1588											
MMI 810	13	63AO6850			93.01 f SR	11/98	x						
MMI 810.1	13	63AO6850											
MMI 810	15				93.04 f SR	11/98	x						
MMI 810	32				91.03 f SR		x						01/91
MMI 810	33	C87AP1	12844/90W	12/95	90.01 f SR	12/95	x					57B	01/91
MMI 810.1	33	63AO6850											
MMI 810	35	63AO6850	12845/90W	12/95	90.02 f SR	12/95	x						
MMI 810.1	35	63AO6850											
MMI 810.1	40-34	63AO6850											
MMI 810	43	63AO6850											
MMI 810.1	43	63AO6850											
MMI 810	45	C87AP1											
MMI 810.1	45	63AO6850											
MMI 810	55	63AO6850			91.04 f SR	04/96							
MMI 810.1	55	63AO6850											
MMI 810	63	63AO6850											
MMI 810	65	63AO6850											
MMI 810	310				90.03 f SR	12/95							
MMI 810	40-34	C87AP1			92.05 f SR	07/97							
MMI 811	33											103BE	
MMI 811	35	63AO6850										105BE	
MMI 811.1	35	63AO6850											
MMI 811	63	63AO6850											
MMI 811.1	63	63AO6850											
MMI 812	23				91.01 f SR	03/96	x						
MMI 812.1	23	63AO6850											
MMI 812	33	63AO6850			91.02 f SR	03/96	x					58BE	
MMI 812	63									Δ			
MMI 813	23	63AO6850											
MMI 813.1	23	63AO6850											
MMI 815	5	63AO6850			92.06 f SR	11/97							
MMI 815	10	63AO6850			92.07 f SR	11/97							
MMI 816		63AO6850											
MMI 816.1		63AO6850											
MMI 962.1	23	63AO6850											
MMI 962.1 110V	23	63AO6850											
MMI 810 110V	33	C87AP1											
MMI 810.1 110V	33	63AO6850											
MMG 810	32		5F041/93	10/98	93.02 f SR	11/98	x						
MMG 810.1	32	63AO6850											
MMG 810	33	C87AP1	5F042/93	10/98	93.03 f SR	11/98	x					84B	
MMG 810.1	33	63AO6850											

Control boxes for gas burners

O currently under test approved Δ certified

Country		EU	D					CH	GB	NL	A	F	I
Type	Model	EC-P.I.N.	DIN Rg. Nr.	valid until...	DVGW Nr.	valid until...	appr.for DAH						
TMMG 810	43	63AO6850											
MMG 810.1	43	63AO6850											
MMG 810	45	C87AP1											
MMG 810.1	45	63AO6850											
MMG 810	63	63AO6850											
MMG 810	65	63AO6850											
MMG 811	33	63AO6850			89.01 f SR	04/94							
MMG 811.1	33	63AO6850											
MMG 811	63	63AO6850											
MMG 811.1	63	63AO6850											
MMG 816		63AO6850											
MMG 870.1	65	63AO6850											
TMG 740-2	32-32				94.02 f SR	07/99	x					53BE	11/90
TMG 740-2 F	32-32											52 B	
TMG 740-2	63-55									Δ			
TMG 740-2	63-58									Δ			
TMG 740-2	45-54											85BE	
TMG 740-3	12-22		12872/92S	01/97	92.04 f SR	02/97							
TMG 740-3	32-32	63AO6850	12871/92W	02/97	92.03 f SR	02/97							
TMG 740-3	43-35	63AO6850											
TMG 740-3 110V	43-35	63AO6850											
TMG 740-3	63-55	63AO6850											
TMG 740-3	63-58	63AO6850											
TMG 740-3	13-53	63AO6850	5F092/95	08/00	96.01 f SR	01/01							
DKG 972		85AT0365			98-0872-GEE								
DMG 970		85AT0367			98-0872-GEE								
DMG 971		85AT0367			98-0872-GEE								
DMG 972		85AT0367			98-0872-GEE								
DMG 973		85AT0367			98-0872-GEE								
SGU 930	33-33	0085AP0838	5F064/94	10/99									
SGU 930 110V	33-33	0085AP0838	5F064/94	10/99									
SGU 930i	33-33	0085AP0839	5F065/94	10/99									
SGU 930i 110V	33-33	0085AP0839	5F065/94	10/99									
TMA 740-1	10-58												
TME 780	32-52	0063AR1447	5F049/99	01/04	94.01 f SR	01/99							
IRD 820					Δ								
IRD 920					Δ								
IRD 1020					Δ								
UVD 971													
ZT 870								Δ					
ZT 812							Δ						

Approvals

satronic
A Honeywell Company

Satronic AG
Brüelstrasse 7
Postfach 324
CH-8157 Dielsdorf

CE-Zulassungen

EG-Baumusterkonformitätserklärung
EU type conformity certificate
Déclaration CE de conformité au type
Dichiarazione di conformità CE

Satronic AG bescheinigt hiermit, dass die in dieser Übersicht genannten Produkte aufgrund der vorliegenden **EG-Baumusterprüfbescheinigungen** die grundsätzlichen Anforderungen der
Gasgeräte-Richtlinie 90/396/EWG
in der gültigen Fassung erfüllen.

Die Anforderungen der weiteren, zutreffenden Richtlinien bezüglich
EMV-Richtlinie 89/336/EWG
Niederspannungs-Richtlinie 73/23/EWG
werden ebenfalls erfüllt.

Grundlage der EG-Baumusterprüfungen sind die harmonisierten Normen und DIN-Normen.

Geltungsbereich der EG-Baumusterkonformitätserklärung
Alle CEN-Mitgliedsländer.
(Comité Européen de Normalisation)

CE-Zeichen/CE-Nummer
Die **Satronic** Produkte tragen auf dem Typenschild ihre EC-Product Identification No.
Die Geräte haben **kein CE-Zeichen,** da es sich nicht um direkt gebrauchsfertige Gasgeräte handelt (Gasgeräterichtlinie 90/396/EWG Artikel 8).

Satronic AG certify by the present **EU type certificates** that the products specified in this list meet the basic requirements of the
Gas Equipment Directive 90/396/EEC
in its prevailing version.

The requirements of other relevant directives concerning
EMC-Directive 89/336/EEC
Low-voltage-Directive 73/23/EEC
are also fulfilled.

The EU type certificates are based on the European standards and DIN standards.

Scope of the EU type conformity certificate
All member states of the CEN.
(Comité Européen de Normalisation)

CE-symbol/CE-number
The EC-Product Identification No. of **Satronic** products are printed on their type label.
The equipment **has no CE-symbol** since it does not constitute ready-to-use gas equipment (gas equipment directive 90/396/EEC Article 8).

La Société **Satronic AG** attestent par la présente que les produits mentionnés dans ce document répondent aux **certificats d'examen CE** de Type conformément aux exigences fondamentales de la
Directive européenne concernant les appareils à gaz 90/396/CEE.

Les exigences des autres dispositions en vigueur relatives à la
Directive CEM 89/336/CEE
Directive Basse Tension 73/23/CEE
sont également remplies.

L'harmonisation des normes ainsi que les normes DIN sont à la base des certificats d'examen CE de type.

Validité de la déclaration CE de conformité au type
Tous les états membres de la CEN.
(Comité Européen de Normalisation)

Marque-CE/Numéro-CE
Les produits **Satronic** portent leur No. d'identification produit CE sur la plaque signalétique.
Les appareils **n'ont pas de marque-CE,** en effet, il ne s'agit pas directement d'appareils à gaz prêts à être utilisés (Disposition en matière d'appareils à gaz 90/396/CEE Article 8).

La **Satronic AG** dichiarano che i prodotti menzionati in questa lista, in base ai presenti **certificati di collaudo CE** soddisfano le esigenze fondamentali della
Direttiva CE valida per apparecchiature per gas 90/396/CEE.

Le esigenze poste dalle ulteriori direttive in riferimento alla
Direttiva 89/336/CEE
concernente le apparecchiature a bassa tensione 73/23/CEE
vengono pure soddisfatte.

Alla base dei collaudi dei tipi, sono le norme armonizzate e le norme DIN.

Limiti di validità della dichiarazione di conformità CE per campioni d'utilità sono
tutti i paesi membri della CEN.
(Comitato Europeo di Normalizzazione)

Sigla-CE/Numero-CE
I prodotti **Satronic** portano sulla targhetta il numero d'identificazione CE. Alcune apparecchiature **non possiedono la sigla-CE,** poichè si tratta di apparecchi per gas non direttamente utilizzabili (direttiva per apparecchiature per gas 90/396/CEE articolo 8).

Artikel Article designation Désignation de l'article Denominazione		CE-Nummer CE-Number Numéro CE CE-Numero
TFI 812.2	5	63AO6850
TFI 812.2	10	63AO6850
TFI 812.2 E	10	63AO6850
TFI 812.2 B	5	63AO6850
TFI 812.2 B	10	63AO6850
TFI 812.3	5	63AO6850
TFI 812.3	10	63AO6850
TFI 812.3 B	5	63AO6850
TFI 812.3 B	10	63AO6850
SKG 960	520	63AS1588
SCM 970		63AS1588
MMI 810	33	C87AP1
MMI 810	35	63AO6850*
MMI 810	40-34	C87AP1
MMI 810	43	63AO6850*
MMI 810	45	C87AP1
MMI 810	55	63AO6850*
MMI 810	63	63AO6850*
MMI 810	65	63AO6850*
MMI 810.1	45	63AO6850*
MMI 811	35	63AO6850
MMI 811	63	63AO6850
MMI 812	33	63AO6850*
MMI 812.1	23	63AO6850*
MMI 813	23	63AO6850*
MMI 815	5	63AO6850
MMI 815	10	63AO6850
MMG 810	33	C87AP1
MMG 810	43	63AO6850*
MMG 810	45	C87AP1
MMG 810	63	63AO6850*
MMG 810	65	63AO6850*
MMG 810.1	45	63AO6850*
MMG 811	33	63AO6850
MMG 811	63	63AO6850
MMG 816		63AO6850
TMG 740-3	32-32	63AO6850
TMG 740-3	43-35	63AO6850*
TMG 740-3	43-35 110V	63AO6850*
TMG 740-3	63-55	63AO6850
TMG 740-3	63-58	63AO6850
TMG 740-3	13-53	63AO6850
TME 780	32-52	0063AR1447
SGU 930	33-33	0085AP0838
SGU 930i	33-33	0085AP0839
SGU 930	33-33 110V	0085AP0838
SGU 930i	33-33 110V	0085AP0839

Artikel Article designation Désignation de l'article Denominazione	CE-Nummer CE-Number Numéro CE CE-Numero

○ = zur Prüfung eingereicht
○ = presented for test purposes
○ = déposé pour homologation
○ = inviato per collaudo

* = zugesagte CE-Nummer
* = applicable CE-Number
* = Numéro CE enregistré
* = CE-Numero riservato

CE-Zulassungen

satronic
A Honeywell Company

Satronic AG
Brüelstrasse 7
Postfach 324
CH-8157 Dielsdorf

Cross reference list

for oilburners

OLD TYPE	REPLACED	—>	BY	POSSIBLE NEW TYPE
IBR 661 + FZ 612	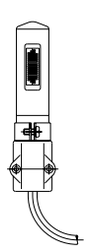 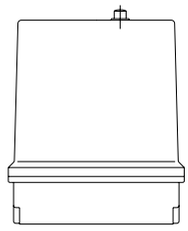		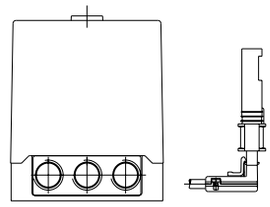	TME 780 + FZE 780
OBR 661 + FZ 612 BR 661 + FZ 612				TMO 720-4 + FZ 711 5)
KBR 611 KBR 612 KBR 612 A / TF 21 A KBR 614 A / TF 20 KBR 617 A / TF 22 KBR 617 C	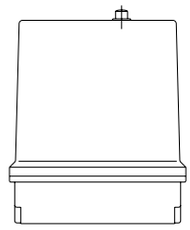		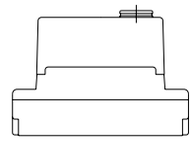	TF 701-1 + US 7900 *)**) or TF 801 + US 7900 1) or TF 802 + US 7900 1)
TF 701, TF 701-1	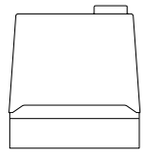		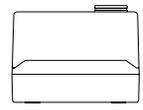	TF 801 (1-stage) 1) or TF 802 (2-stage) 1)
TF 701 B	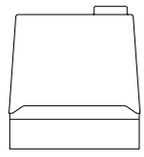		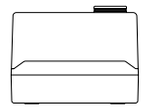	TF 801 B (1-stage) 1) or TF 802 B (2-stage) 1)
TF 704 (without override contact)	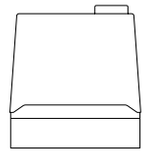		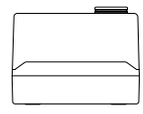	TF 804 1) (with override contact)
TF 714-1	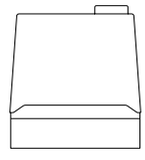		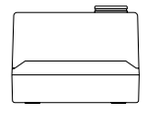	TF 802 1)
TF 721 + FZ 711	 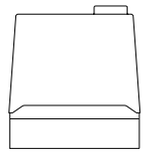		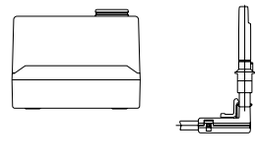	TF 821 (1-stage) + 1)2) MZ 770 or TF 822 (2-stage) + MZ 770 TF 830 TF 832

OLD TYPE	REPLACED	—>	BY	POSSIBLE NEW TYPE	
TF 821 TF 822	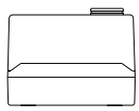		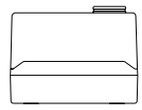	TF 830 TF 832	6)
TF 730-1 TF 730-2	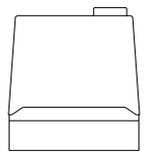		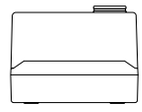	TF 830 (1-stage) or TF 832 (2-stage)	1) 1)
TF 734	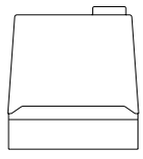		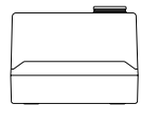	TF 834	1)
TF 734-2 + GZ 770	 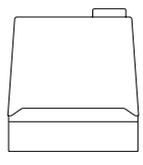		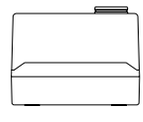 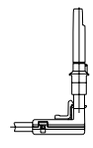	TF 834E + MZ 770	1)2)
TF 740 + FZ 711	 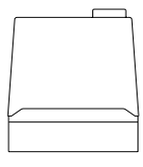		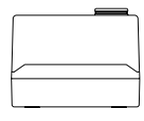 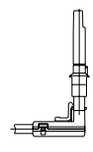	TF 840 + MZ 770	1)2)
TTO 750-1 + FZ 711 TTO 810 + FZ 711	 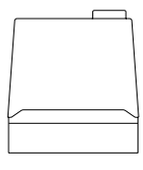		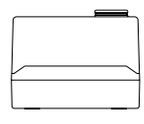 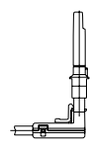	TTO 872 + MZ 770	1)2)4)
TTO 836	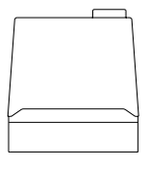		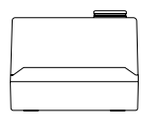	TTO 876	1)
TMO 720 TMO 720-2 TMO 721	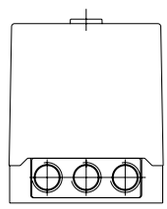		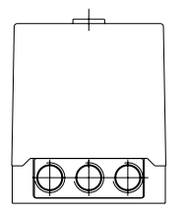	TMO 720-4	

ATTENTION

*) no longer available.
**) please note leaflet US 7900.
1) to compensate the height of TF 700/800, the reset button extension can be used, Art. Nr. 70601.
2) the different diameter of the photocells can be compensated by an adapter or by using the MZ-mounting flange.
3) remove link live-terminal 1.
4) verify that terminal 1 is not connected to live.
5) new wiring incl. new base necessary.
6) also approved in Hungary since 1992.

Cross reference list

satronic
A Honeywell Company

Satronic AG
Brüelstrasse 7
Postfach 324
CH-8157 Dielsdorf

Cross reference list

for gas- and dual-fuel burners

OLD TYPE	REPLACED	—>	BY	POSSIBLE NEW TYPE	
IBR 661 + UVF 662 + UVZ 716 IBR 661 + IFW 661	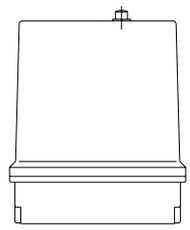		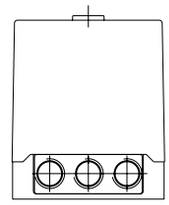	TME 780 + UVZE TME 780	5) 5)
BR 661 + UVF 661 + UVZ 716 BR 661 + IFW	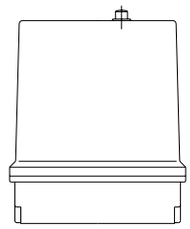		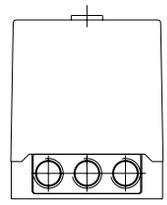	TMG 740-3 + UVZ 780 TMG 740-3	5) 5)
GBR 681	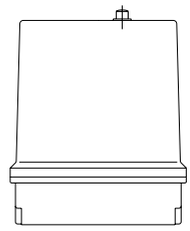		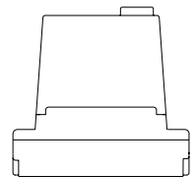	MMI 810	**)
GBR 681/74	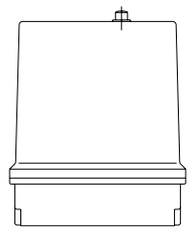		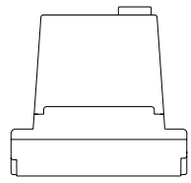	MMI 810	**)
TTI 790	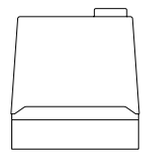		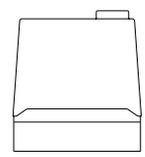	MMI 810	2)3)
TMG 720 TMG 740 TMG 740-1	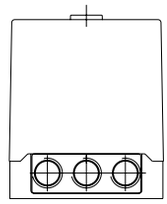		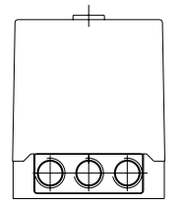	TMG 740-2	
TMG 740-2	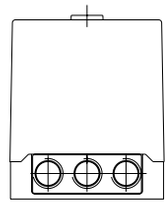		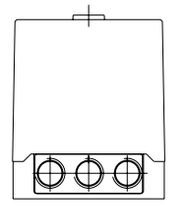	TMG 740-3	4)

OLD TYPE	REPLACED	—>	BY	POSSIBLE NEW TYPE
TTG 760	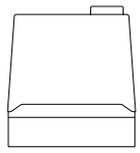		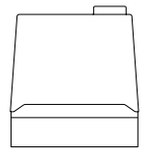	MMG 810
TTG 760 FN	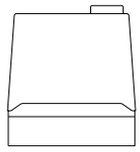		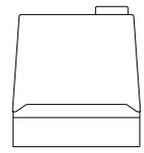	for France: TTG 760 FN *) other countries: MMG 811
TFI 712F-1 TFI 712F	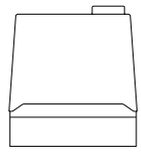		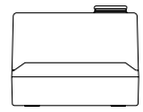	TFI 812 Mod. 5 1)
TFI 712-1 TFI 712	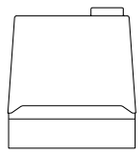		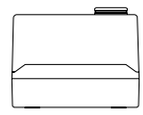	TFI 812 Mod. 10 1)
TFI 735-1 TFI 735	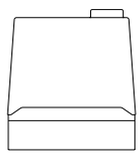		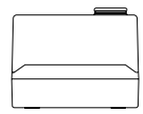	TFI 812 B 1)

ATTENTION

*) no longer available.
**) please note leaflet US 7910.
1) to compensate the height of TF 700/800, the reset button extension can be used, Art. Nr. 70601.
2) link between terminals 1 and 9 mandatory.
3) fail-safe air pressure switch supervision.
4) check the correct UV / Ion switch setting.
5) new wiring incl. new base necessary.

Cross reference list

satronic
A Honeywell Company

Satronic AG
Brüelstrasse 7
Postfach 324
CH-8157 Dielsdorf

Oil Burner Safety Control

For 1- or 2-stage oil power burners up to 30kg/h capacity and intermittent operations.

Flame detection:
- **Photoresistor FZ 771 S**
- **Infrared-flicker detector IRD 1010**
- **UV solid state sensor UVD 970**



APPLICATION RANGE

The TF 801 or TF 802 oil burner safety control boxes are suitable to control and monitor oil power burner up to 30 kg/h capacity (approved and certified according to DIN 4787). The control boxes TF 801.2 and TF 802.2 are approved and certified according to EN230.

TYPES AVAILABLE

TF 801	1-stage operation post-ignition time ca. 20 sec.
TF 801.2	1-stage operation post-ignition time ca. 20 sec. low voltage protection according to EN230
TF 802	2-stage operation post-ignition time 2-4 sec.
TF 802.2	2-stage operation post-ignition time 2-4 sec. low voltage protection according to EN230

CONSTRUCTIONAL FEATURES

The control box circuitry is protected by a flame resistant, transparent plastic housing. It incorporates the thermo-mechanical, temperature compensated timer, flame check and reset circuits.

Manual reset from lockout is provided by a push button with an integrated lockout signal lamp. A central fixing screw locks the control box to the wiring base. The wiring base and control box have a positive plug-in arrangement, making it impossible to achieve an incorrect connection between the two parts. A variety of cable entry points provides utmost flexibility of electrical wiring.

The TF 802.2 is fully compatible with the TF 701, 701-1 and TF 802. The flame detector IRD 910 must be replaced by its compatible type IRD 1010.
An optional extension button (item no. 70601) compensates for height differences.

TECHNICAL DATA

Operating voltage		220/240 V (-15..+10%) 50 Hz (40-60Hz)
Fuse rating		10 A fast, 6 A slow
Power consumption		ca. 5 VA
Max. load per output		
- terminal 3		1.5 A, cos φ 0.2
- terminal 4		4 A, cos φ 0.4
- terminal 5		0.5 A, cos φ 0.4
- terminal 6		0.5 A, cos φ 0.4
- terminal 7		0.1 A, cos φ 0.4
total load		5A, cos φ 0.4
Pre-purge time		ca. 12 sec.
Pre-ignition time		ca. 12 sec.
Post-ignition time	TF 801/TF801.2	ca. 20 sec.
	TF 802/TF802.2	ca. 2-4 sec
Delay time to oil valve 2		40 sec. (TF 802)
Lockout safety time		10 sec.
Reset time from lockout		ca. 90 sec
Flame detector:		
FZ 771 S red		side-on viewing
FZ 771 S white		side-on and end-on viewing
Light sensitivity FZ 711S		> 10 Lux
IRD 1010		side-on or end-on viewing
UVD 970		end-on viewing
Weight incl. wiring base		0.25 kg
Mounting position		any
Protection class		IP44
Recommended ambient operating temperature for control and flame detector		0°C...+60°C
approved and certified according to European standards		
	TF 801.2/TF802.2	EN 230
	TF 801/TF802	DIN 4787

APPLICATION NOTES

1. Flame control

The following detectors can be used for flame control:

- For yellow oil flame: photoresistor FZ 771 S (red inscription: side-on; white inscription: side-on and end-on viewing)
- for blue or yellow flame: infrared-flicker detector type IRD 1010 or as alternative the UV solid state sensor UVD 970.

Using the photo resistor FZ 711 S, the no flame signal is generated at light levels below 3 Lux with respect to the operating cycle of the control. According to DIN74787 and EN 230 stray light safety level has to be established in conjunction with the accompanying burner.
Connecting the IRD 1010 or the UVD 970, the correct wiring has to be observed.

2. Burner control

For burners without an oil solenoid valve, the burner motor has to be connected to terminal 5.

3. Low-voltage protection

TF 801.2 and TF 802.2 only

- The mains voltage has to be more than 187 V_{eff} in order to allow the unit to perform a start-up.
- The mains voltage is not only monitored in the start-up phase but also permanently during operation. If the voltage drops below <160 V_{eff} during start-up or run time the control box goes into lockout mode. If the voltage rises again, the control box performs automatically a start-up as soon as the mains voltage is >187 V_{eff} .

4. Safety

The design and control sequence of the TF 801/TF 801.2 and TF 802/TF802.2 control boxes comply with the currently applicable European standards and regulations.

6. Mounting and electrical wiring

Wiring base:

- 3 earth terminals with additional terminal for burner earthing
- 3 neutral terminals with internal permanent connection to neutral terminal (terminal 7)
- 2 spare auxiliary terminals
- 2 slide in plates and 2 easy-knockout holes (PG 11 thread), plus 2 easy-knockout holes in the bottom of the base facilitate the wiring.
- The 3-wire sensor cable can be used for the IRD and UVD as well as for the FZ711 S. Please keep that in mind for burners which may be upgraded from FZ to IRD or UVD later on (e.g upgraded to a blue flame burner).

General:

- The control box can be mounted in any position. The protection class is IP44 (water spray tight). Neither the control box nor the flame detector should be subjected to excessive vibration.

COMMISSIONING AND ROUTINE CHECKS

1. Important notes

- The controls must be installed by qualified personnel only. The relevant national regulations have to be observed.
- On commissioning the wiring has to be carefully checked according the appropriate diagram, Incorrect wiring can damage the unit and endanger the installation.
- The fuse rating has to ensure that the limits specified in TECHNICAL DATA will not be exceed. If these precautions are not observed, the effect of a short circuit can cause severe damage to the control and installation.
- For safety reasons a minimum of one control shut-down per 24 hours has to be observed.
- Disconnect the mains before the control box is plugged in or out!
- The control box is a safety device and must not be opened!

2. Function control

For safety reasons the flame detection system should be tested on commissioning the installation as well as after a service or longer shut-down.
Prerequisite: mains voltage >187 V_{eff}
(for TF801.2 and TF 802.2 only)

a) Start-up with covered flame detector
   - After lock-out safety time is over the unit has to go in to lockout mode!

b) Start-up with exposed flame detector:
   - After 20 sec. pre-purge time the unit has to go into lockout mode!

c) Normal start-up with burner in the normal position, cover up the flame detector:
   - After start-up, and end of lock-out safety time the unit has to go into lockout mode!

d) The flame sensor signals can be checked either using the UP 940 or performing the following measurements:
   - For TF801 and TF802 only: The measured sensor signal during operation should be minimal 2.4mA
   - For TF801.2 and TF802.2 only: The sensor signal measurements are not reliable, as only marginal values changes occur. Measure instead the voltage across the photo resistor! For a reliable flame monitoring the DC voltage across the photo resistor (terminal 1 and 2) in operating mode should be less than 2 V.

3. Fault findings

Burner is not working:

- thermostat circuit open
- faulty electrical wiring
- mains voltage <187 V_{eff} (for TF801.2 and TF 802.2 only)

Burner starts, but the flame does not establish, a lock out occurs:

- stray light on flame detector
- no ignition or no fuel

Burner starts, the flame establishes, but after the safety time, a lock out occurs:

- dirty or faulty flame detector
- insufficient light on detector
- sensitivity adjustment too low on IRD.

For a quick and safe diagnosis use the Satronic UP 940 burner test box.

CIRCUIT AND TIMING DIAGRAM TF 801/TF 801.2

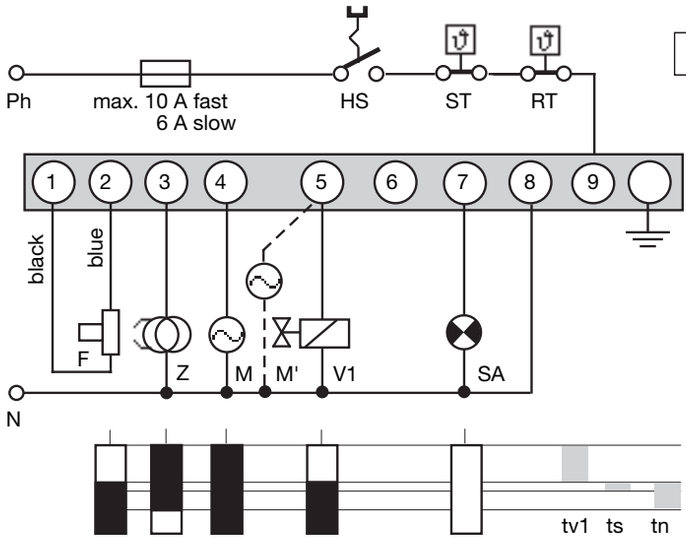

IRD-OR UVD CONNECTION

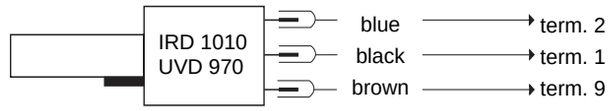

HS	Mains switch
ST	Limit thermostat
RT	Control thermostat
F	Flame detector FZ 711 S (IRD 1010, UVD 970 see separate diagram)
Z	Ignition
M	Burner motor (burner **with** solenoid valve)
M'	Burner motor (burner **without** solenoid valve)
V1	Oil solenoid valve, 1st-stage
SA	External lock-out signal
tv1	Pre-ignition time with or without pre-purge
ts	Lock-out safety time
tn	Post-ignition time

CIRCUIT AND TIMING DIAGRAM TF 802/TF 802.2

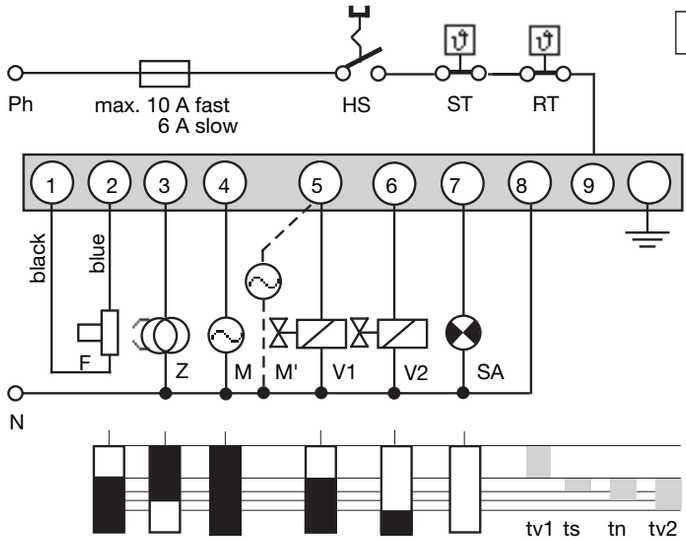

IRD-OR UVD CONNECTION

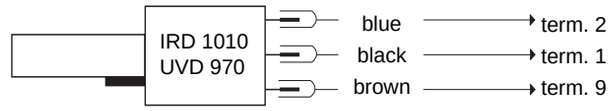

HS	Mains switch
ST	Limit thermostat
RT	Control thermostat
F	Flame detector FZ 711 S (IRD 1010, UVD 970 see separate diagram)
Z	Ignition
M	Burner motor (burner with solenoid valve)
M'	Burner motor (burner without solenoid valve)
V1	Oil solenoid valve, 1st-stage
V2	Oil solenoid valve, 2nd stage
SA	External lock-out signal
tv1	Pre-ignition time with or without pre-purge
ts	Lock-out safety time
tn	Post-ignition time
tv2	Delay 2nd stage

SCHEMATIC DIAGRAMM TF 801.2

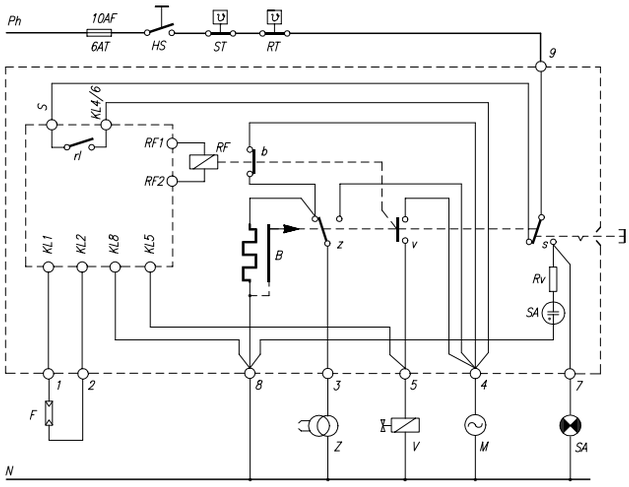

SCHEMATIC DIAGRAMM TF 802.2

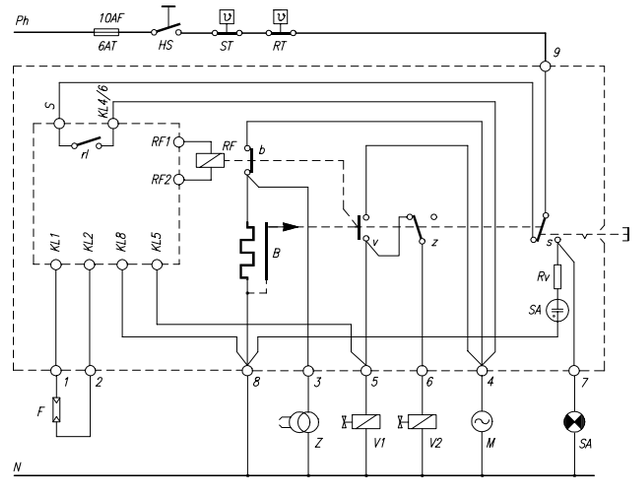

HS Mains switch	F Flame detector MZ 770 S, IRD 1010 or UVD 970	RF Flame relay
ST Limit thermostat	V Valves	rl low voltage relay
RT Control thermostat	Z Ignition	B Thermomechanical timer
SA Lock-out signal indicator	M Burner motor	RV Resistor

TF 80X AND SOCKET

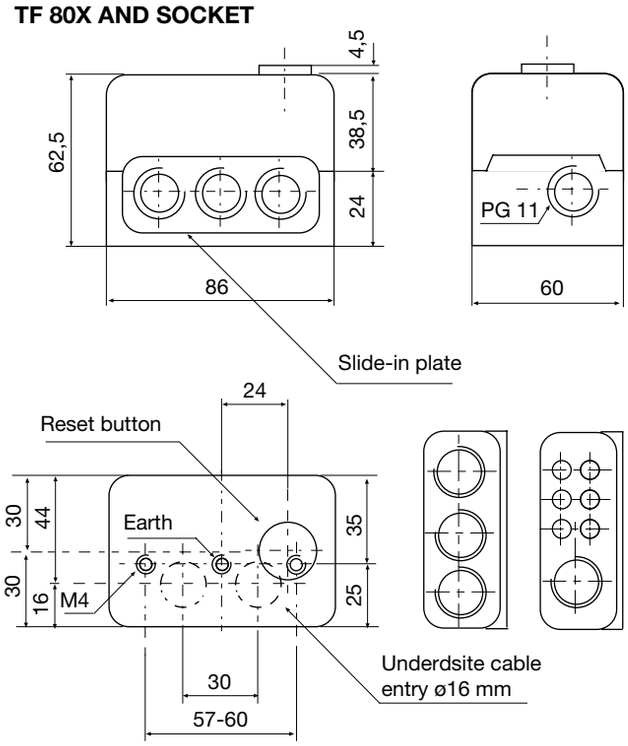

PHOTORESISTOR FZ 711 S

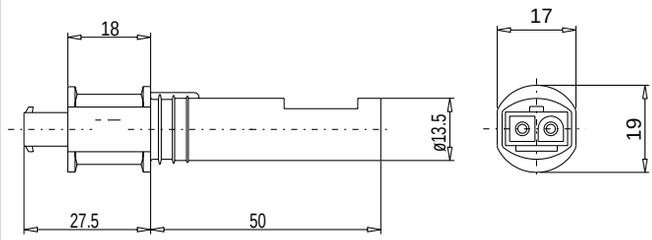

HOLDER M74 FOR FZ, IRD OR UVD

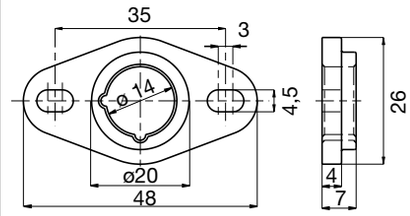

UVD 970

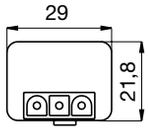

IRD 1010

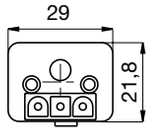

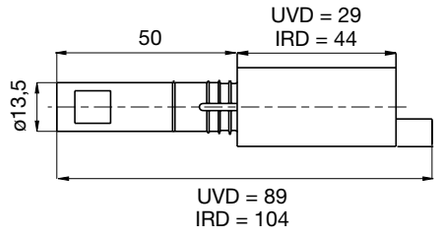

VARIATION IRD

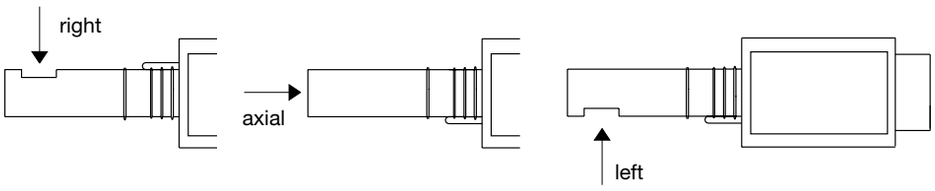

ORDERING INFORMATION

ITEM	DESIGNATION	ITEM NO.
Control box	Type TF 801	02001
or	Type TF 801.2	02021
Control box	Type TF 802	02404
or	Type TF 802.2	02424
Socket	Socket 701 ABEN	70001
Insert plate	PG-Plate	70502
optional	Cable entry plate	70501
Flame detector	FZ 711 S red	40001
optional	FZ 711 S white	41001
optional	IRD 1010 right	16501
optional	IRD 1010 end-on	16502
optional	IRD 1010 left	16503
optional	UVD 970	16702
Support for flame detector	Holder M 74 for FZ, IRD, UVD	59074
Connectioncable IRD/FZ/UVD	Plug type, 3 core cable, 0.6 m, with tag wire ends	7236001
Connectioncable FZ 711 S	Plug type, 2 core cable, 0.5 m, with tag wire ends	7225001

The above ordering information refers to the standard version.
Special versions are also included in our product range.

Specifications subject to change without notice

Satronic AG
Brüelstrasse 7
Postfach 324
CH-8157 Dielsdorf

Oil Burner Safety Control

For 1- or 2-stage oil power burners up to 30kg/h capacity and intermittent operations.

Flame detection:
- Photoresistor FZ 771 S
- Infrared-flicker detector IRD 1010
- UV solid state sensor UVD 970



APPLICATION RANGE

The TF 804 oil burner safety control box is suitable to control and monitor oil power burner with or without oil preheaters up to 30 kg/h capacity (approved and certified according to DIN 4787). The control boxes TF 804.2 is approved and certified according to EN230.

TYPES AVAILABLE

TF 804	1-stage operation post-ignition time ca. 3-5 sec.
TF 804.2	1-stage operation post-ignition time ca. 3-5 sec. low voltage protection according to EN230

CONSTRUCTIONAL FEATURES

The control box circuitry is protected by a flame resistant, transparent plastic housing. It incorporates the thermo-mechanical, temperature compensated timer, flame check and reset circuits.

Manual reset from lockout is provided by a push button with an integrated lockout signal lamp. A central fixing screw locks the control box to the wiring base. The wiring base and control box have a positive plug-in arrangement, making it impossible to achieve an incorrect connection between the two parts. A variety of cable entry points provides utmost flexibility of electrical wiring.

The TF 804.2 is fully compatible with the TF 704 and TF 804. The flame detector IRD 910 must be replaced by its compatible type IRD 1010.
An optional extension button (item no. 70601) compensates for height differences.

TECHNICAL DATA

Operating voltage	220/240 V (-15..+10%) 50 Hz (40-60Hz)
Fuse rating	10 A fast, 6 A slow
Power consumption	ca. 5 VA
Max. load per output	
- terminal 3	1.5 A, cos φ 0.2
- terminal 4	4 A, cos φ 0.4
- terminal 5	0.5 A, cos φ 0.4
- terminal 6	4 A, cos φ 0.4
- terminal 7	0.1 A, cos φ 0.4
total load	5A, cos φ 0.4
Pre-purge time	ca. 12 sec.
Pre-ignition time	ca. 12 sec.
Post-ignition time	ca. 3-5 sec.
Lockout safety time	10 sec.
Reset time from lockout	ca. 60 sec
Flame detector:	
FZ 771 S red	side-on viewing
FZ 771 S white	side-on and end-on viewing
Light sensitivity FZ 711S	> 10 Lux
IRD 1010	side-on or end-on viewing
UVD 970	end-on viewing
Weight incl. wiring base	0.25 kg
Mounting position	any
Protection class	IP44
Recommended ambient operating temperature for control and flame detector	0°C...+60°C
approved and certified according to European standards	
TF 804.2	EN 230
TF 804	DIN 4787

APPLICATION NOTES

1. Flame control

The following detectors can be used for flame control:

- For yellow oil flame: photoresistor FZ 771 S (red inscription: side-on; white inscription: side-on and end-on viewing)
- for blue or yellow flame: infrared-flicker detector type IRD 1010 or as alternative the UV solid state sensor UVD 970.

Using the photo resistor FZ 711 S, the no flame signal is generated at light levels below 3 Lux with respect to the operating cycle of the control. According to DIN74787 and EN 230 stray light safety level has to be established in conjunction with the accompanying burner.
Connecting the IRD 1010 or the UVD 970, the correct wiring has to be observed.

2. Burner control

With oil preheater:

- The fuel heater of the burner must have a temperature control switch. The closing contact-switch of the preheater has to be connected between terminals 4 and 6. A special contact in the control unit-connects the thermo-switch of the heater as soon as the burner is operating and a photocurrent is generated. Therefore an interruption of the burner operation due to a decrease in oil temperature is prevented (e.g. in case of high oil flow).
- According to EN 230 A2.1, the short circuiting of the thermo-switch is allowed only for an oil flow of max. 10 kg/h. Burners with a higher throughput have to shut down if the oil temperature gets below the allowed minimum. In such a case the thermo-switch has to be put in the phase-circuit and terminals 4 and 6 have to be connected with a link.

Without oil heater:

- In such a case the terminals 4 and 6 have to be connected with a link.

3. Low-voltage protection

TF 804.2 only

- The mains voltage has to be more than 187 V_{eff} in order to allow the unit to perform a start-up.
- The mains voltage is not only monitored in the start-up phase but also permanently during operation. If the voltage drops below <160 V_{eff} during start-up or run time the control box goes into lockout mode. If the voltage rises again, the control box performs automatically a start-up as soon as the mains voltage is >187 V_{eff} .

4. Safety

The design and control sequence of the TF 804/TF 804.2 control boxes comply with the currently applicable European standards and regulations.

6. Mounting and electrical wiring

Wiring base:

- 3 earth terminals with additional terminal for burner earthing
- 3 neutral terminals with internal permanent connection to neutral terminal (terminal 7)
- 2 spare auxiliary terminals
- 2 slide in plates and 2 easy-knockout holes (PG 11 thread), plus 2 easy-knockout holes in the bottom of the base facilitate the wiring.
- The 3-wire sensor cable can be used for the IRD and UVD as well as for the FZ711 S. Please keep that in mind for burners which may be upgraded from FZ to IRD or UVD later on (e.g upgraded to a blue flame burner).

General:

- The control box can be mounted in any position. The protection class is IP44 (water spray tight). Neither the control box nor the flame detector should be subjected to excessive vibration.

COMMISSIONING AND ROUTINE CHECKS

1. Important notes

- The controls must be installed by qualified personnel only. The relevant national regulations have to be observed.
- On commissioning the wiring has to be carefully checked according the appropriate diagram, Incorrect wiring can damage the unit and endanger the installation.
- The fuse rating has to ensure that the limits specified in TECHNICAL DATA will not be exceed. If these precautions are not observed, the effect of a short circuit can cause severe damage to the control and installation.
- For safety reasons a minimum of one control shut-down per 24 hours has to be observed.
- Disconnect the mains before the control box is plugged in or out!
- The control box is a safety device and must not be opened!

2. Function control

For safety reasons the flame detection system should be tested on commissioning the installation as well as after a service or longer shut-down.
Condition: mains voltage >187 V_{eff} (for TF804.2 only)

a) Start-up with covered flame detector
   - After lock-out safety time is over the unit has to go in to lockout mode!

b) Start-up with exposed flame detector:
   - After 20 sec. pre-purge time the unit has to go into lockout mode!

c) Normal start-up with burner in the normal position, cover up the flame detector:
   - After start-up, and end of lock-out safety time the unit has to go into lockout mode!

d) The flame sensor signals can be checked either using the UP 940 or performing the following measurements:
   - For TF804 only: The measured sensor signal during operation should be minimal 2.4mA
   - For TF804.2 only: The sensor signal measurements are not reliable, as only marginal values changes occur. Measure instead the voltage across the photo resistor! For a reliable flame monitoring the DC voltage across the photo resistor (terminal 1 and 2) in operating mode should be less than 2 V.

3. Fault findings

Burner is not working:

- thermostat circuit open
- faulty electrical wiring
- mains voltage <187 V_{eff} (for TF804.2 only)

Burner starts, but the flame does not establish, a lock out occurs:

- stray light on flame detector
- no ignition or no fuel

Burner starts, the flame establishes, but after the safety time, a lock out occurs:

- dirty or faulty flame detector
- insufficient light on detector
- sensitivity adjustment too low on IRD.

For a quick and safe diagnosis use the Satronic UP 940 burner test box.

CIRCUIT AND TIMING DIAGRAM TF 804/TF 804.2

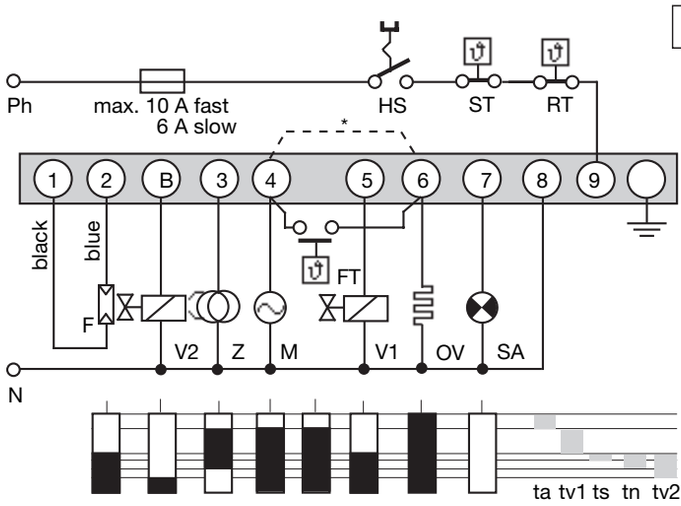

IRD-OR UVD CONNECTION

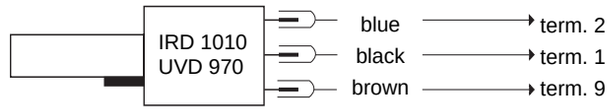

HS	Mains switch
ST	Limit thermostat
RT	Control thermostat
F	Flame detector FZ 711 S (IRD 1010, UVD 970 see separate diagram)
Z	Ignition
M	Burner motor (burner with solenoid valve)
V1, V2	Solenoid valves
OV	Oil preheater
FT	Release thermostat
SA	External lock-out signal
*	With burners without fuel heaters terminals 4 and 6 have to be connected with a jumper.

ta	Pre-heat-time
tv1	Pre-ignition time with or without pre-purge
ts	Lock-out safety time
tn	Post-ignition time
tv2	Delay 2nd stage

SCHEMATIC DIAGRAMM TF 804.2

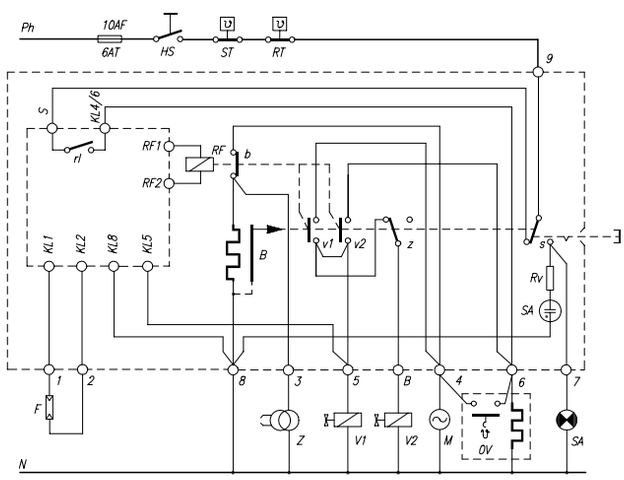

HS	Mains switch	F	Flame detector MZ 770 S, IRD 1010 or UVD 970	RF	Flame relay
ST	Limit thermostat	V	Valves	rl	low voltage relay
RT	Control thermostat	Z	Ignition	B	Thermomechanical timer
SA	Lock-out signal indicator	M	Burner motor	RV	Resistor

TF 804/804.2 AND SOCKET

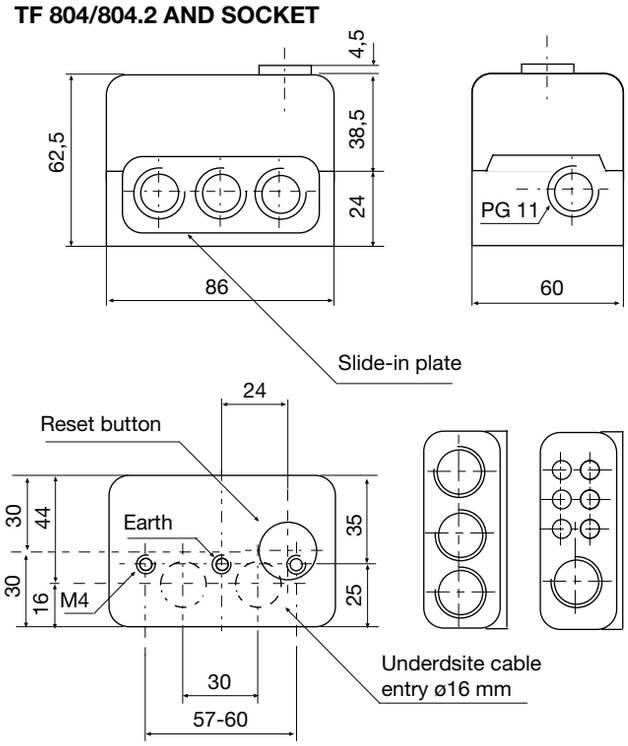

PHOTORESISTOR FZ 711 S

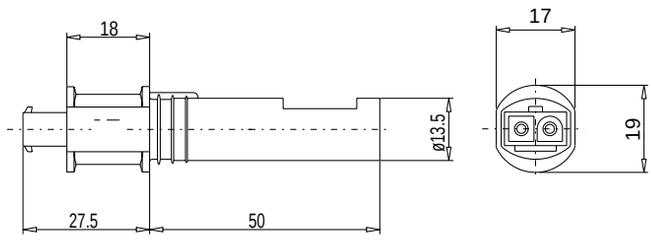

HOLDER M74 FOR FZ, IRD OR UVD

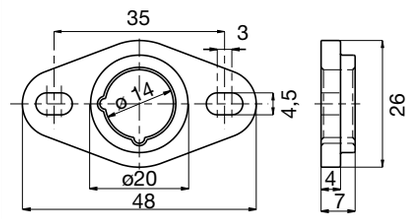

UVD 970

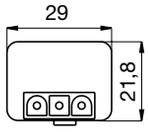

IRD 1010

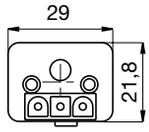

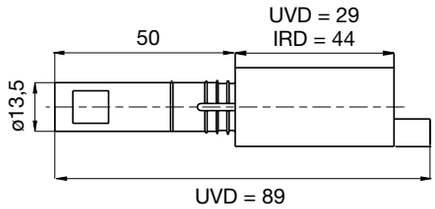

VARIATION IRD

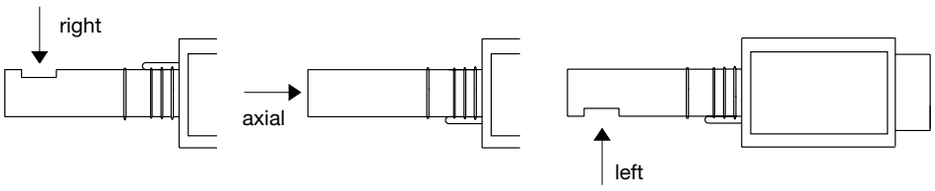

ORDERING INFORMATION

ITEM	DESIGNATION	ITEM NO.
Control box	Type TF 804	02005
or	Type TF 804.2	02025
Socket	Socket 701 ABEN	70001
Insert plate	PG-Plate	70502
optional	Cable entry plate	70501
Flame detector	FZ 711 S red	40001
optional	FZ 711 S white	41001
optional	IRD 1010 right	16501
optional	IRD 1010 end-on	16502
optional	IRD 1010 left	16503
optional	UVD 970	16702
Support for flame detector	Holder M 74 for FZ, IRD, UVD	59074
Connectioncable IRD/FZ/UVD	Plug type, 3 core cable, 0.6 m, with tag wire ends	7236001
Connectioncable FZ 711 S	Plug type, 2 core cable, 0.5 m, with tag wire ends	7225001

The above ordering information refers to the standard version.
Special versions are also included in our product range.

Specifications subject to change without notice

Satronic AG
Brüelstrasse 7
Postfach 324
CH-8157 Dielsdorf

Oil Burner Safety Control

For 1- or 2-stage oil power burners up to 30kg/h capacity and intermittent operations.

Flame detection:
- **Photoresistor MZ 770 S**
- **Infrared-flicker detector IRD 1010**
- **UV solid state sensor UVD 970**

APPLICATION RANGE

The TF 830.3 or TF 832.3 oil burner safety control boxes are suitable to control and monitor oil power burner up to 30 kg/h capacity (approved and certified according to EN230).

TYPES AVAILABE

TF 830.3	1-stage operation post-ignition time ca. 20 sec. low voltage protection according to EN230
TF 832.3	2-stage operation post-ignition time 2-5 sec. low voltage protection according to EN230

CONSTRUCTIONAL FEATURES

The control box circuitry is protected by a flame resistant, transparent plastic housing. It incorporates the thermo-mechanical, temperature compensated timer, flame check and reset circuits.

Manual reset from lockout is provided by a push button with an integrated lockout signal lamp. A central fixing screw locks the control box to the wiring base. The wiring base and control box have a positive plug-in arrangement, making it impossible to achieve an incorrect connection between the two parts. A variety of cable entry points provides utmost flexibility of electrical wiring.

The TF 832.3 is fully compatible with the TF 730, 730-1 and TF 832. The flame detector IRD 911 must be replaced by its compatible type IRD 1010. An optional extension button (item no. 70601) compensates for height differences.



TECHNICAL DATA

Operating voltage		220/240 V (-15..+10%) 50 Hz (40-60Hz)
Fuse rating		10 A fast, 6 A slow
Power consumption		ca. 5 VA
Max. load per output		
- terminal 3		1.5 A, cos φ 0.2
- terminal 4		4.0 A, cos φ 0.4
- terminal 5		0.5 A, cos φ 0.4
- terminal 6		0.5 A, cos φ 0.4
- terminal 7		0.1 A, cos φ 0.4
total load		5.0 A, cos φ 0.4
Pre-purge time		ca. 12 sec.
Pre-ignition time		ca. 12 sec.
Post-ignition time	TF 830.3	ca. 20 sec.
	TF 832.3	ca. 2-5 sec
Delay time to oil valve 2		40 sec. (TF 832.3)
Lockout safety time		10 sec.
Reset time from lockout		ca. 90 sec
Flame detector:		
MZ 770 S		side-on and end-on viewing
Light sensitivity MZ 770 S		> 6 Lux
IRD 1010		side-on or end-on viewing
UVD 970		end-on viewing
Sensor operating current		min. 30 µA
Weight incl. wiring base		0.25 kg
Mounting position		any
Protection class		IP44
Recommended ambient operating temperature for control and flame detector		0°C...+60°C
approved and certified according to European standards		EN 230

0730.10-00-e/04/99

APPLICATION NOTES

1. Flame control

The following detectors can be used for flame control:
- For yellow oil flame: photoresistor MZ 770 S
- for blue or yellow flame: infrared-flicker detector type IRD 1010 or as alternative the UV solid state sensor UVD 970.

Using the photo resistor MZ 770 S, the no flame signal is generated at light levels below 3 Lux with respect to the operating cycle of the control. According to EN 230 stray light safety level has to be established in conjunction with the accompanying burner.
Connecting the IRD 1010 or the UVD 970, the correct wiring has to be observed.

2. Burner control

For burners without an oil solenoid valve, the burner motor has to be connected to terminal 5.

3. Low-voltage protection

The start up of the burner can only take place if the mains voltage is higher than a limit which is 15% below nominal value. If the voltage drops below 160V, a start-up is prevented or – without allowing to release the fuel – the control box goes into lock out mode.

4. Safety

The design and control sequence of the TF 830.3 and TF 832.3 control boxes comply with the currently applicable European standards and regulations.

6. Mounting and electrical wiring

Wiring base:
- 3 earth terminals with additional terminal for burner earthing
- 3 neutral terminals with internal permanent connection to neutral terminal (terminal 8)
- 2 spare auxiliary terminals
- 2 slide in plates and 2 easy-knockout holes (PG 11 thread), plus 2 easy-knockout holes in the bottom of the base facilitate the wiring.

General:
- The control box can be mounted in any position. The protection class is IP44 (water spray tight). Neither the control box nor the flame detector should be subjected

COMMISSIONING AND ROUTINE CHECKS

1. Important notes

- The controls must be installed by qualified personnel only. The relevant national regulations have to be observed.
- On commissioning the wiring has to be carefully checked according the appropriate diagram, Incorrect wiring can damage the unit and endanger the installation.
- The fuse rating has to ensure that the limits specified in TECHNICAL DATA will not be exceed. If these precautions are not observed, the effect of a short circuit can cause severe damage to the control and installation.
- For safety reasons a minimum of one control shut-down per 24 hours has to be observed.
- Disconnect the mains before the control box is plugged in or out!
- The control box is a safety device and must not be opened!

2. Function control

For safety reasons the flame detection system should be tested on commissioning the installation as well as after a service or longer shut-down.

a) Start-up with covered flame detector
   - After lock-out safety time is over the unit has to go in to lockout mode!

b) Start-up with exposed flame detector:
   - After 20 sec. pre-purge time the unit has to go into lockout mode!

c) Normal start-up with burner in the normal position, cover up the flame detector:
   - After start-up, and end of lock-out safety time the unit has to go into lockout mode!

3. Fault findings

Burner is not working:
- thermostat circuit open
- faulty electrical wiring
- mains voltage too low

Burner starts, but the flame does not establish, a lock out occurs:
- stray light on flame detector
- no ignition or no fuel
- mains voltage more than -15% below nominal value.

Burner starts, the flame establishes, but after the safety time, a lock out occurs:
- dirty or faulty flame detector
- insufficient light on detector
- sensitivity adjustment too low on IRD.

For a quick and safe diagnosis use the Satronic UP 940 burner test box.

CIRCUIT AND TIMING DIAGRAM TF 830.3

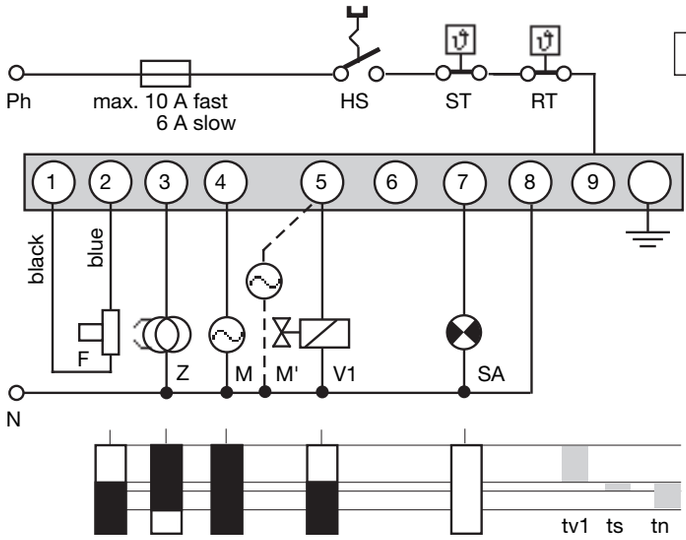

IRD-OR UVD CONNECTION

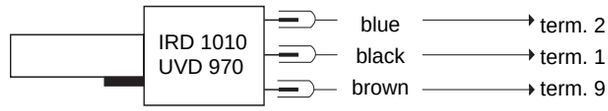

HS	Mains switch
ST	Limit thermostat
RT	Control thermostat
F	Flame detector MZ 770 S (IRD 1010, UVD 970 see separate diagram)
Z	Ignition
M	Burner motor (burner **with** solenoid valve)
M'	Burner motor (burner **without** solenoid valve)
V1	Oil solenoid valve, 1st-stage
SA	External lock-out signal
tv1	Pre-ignition time with or without pre-purge
ts	Lock-out safety time
tn	Post-ignition time

CIRCUIT AND TIMING DIAGRAM 832.3

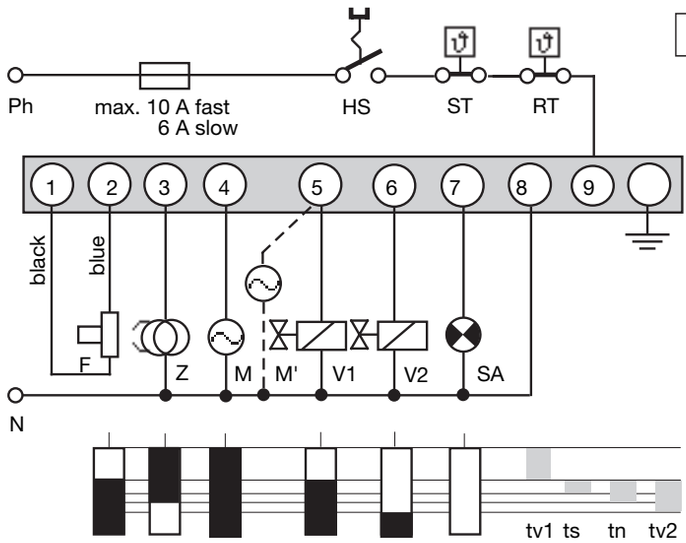

IRD-OR UVD CONNECTION

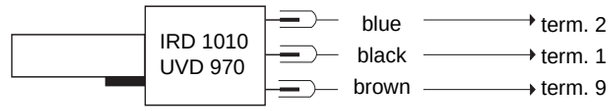

HS	Mains switch
ST	Limit thermostat
RT	Control thermostat
F	Flame detector MZ 770 S (IRD 1010, UVD 970 see separate diagram)
Z	Ignition
M	Burner motor (burner **with** solenoid valve)
M'	Burner motor (burner **without** solenoid valve)
V1	Oil solenoid valve, 1st-stage
V2	Oil solenoid valve, 2nd stage
SA	External lock-out signal
tv1	Pre-ignition time with or without pre-purge
ts	Lock-out safety time
tn	Post-ignition time
tv2	Delay 2nd stage

SCHEMATIC DIAGRAMM TF 830.3

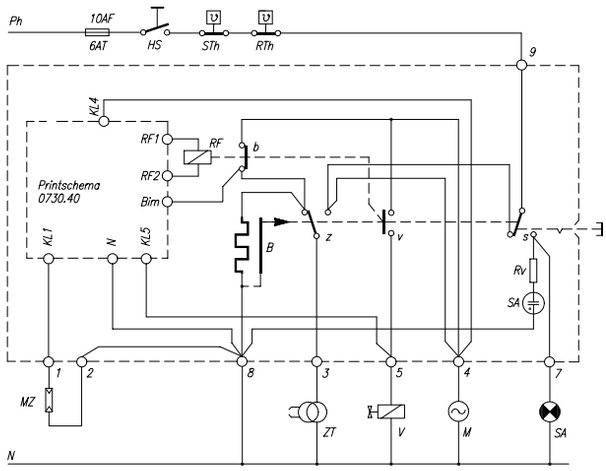

SCHEMATIC DIAGRAMM TF 832.3

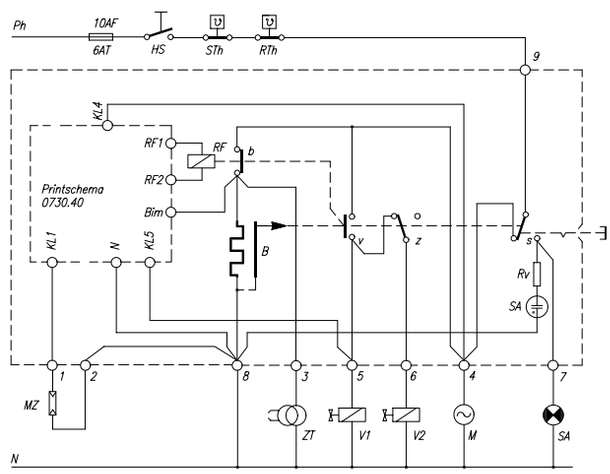

HS Mains switch	F Flame detector MZ 770 S, IRD 1010 or UVD 970	RF Flame relay
ST Limit thermostat	V Valves	rl low voltage relay
RT Control thermostat	Z Ignition	B Thermomechanical timer
SA Lock-out signal indicator	M Burner motor	RV Resistor

TF 83X AND SOCKET

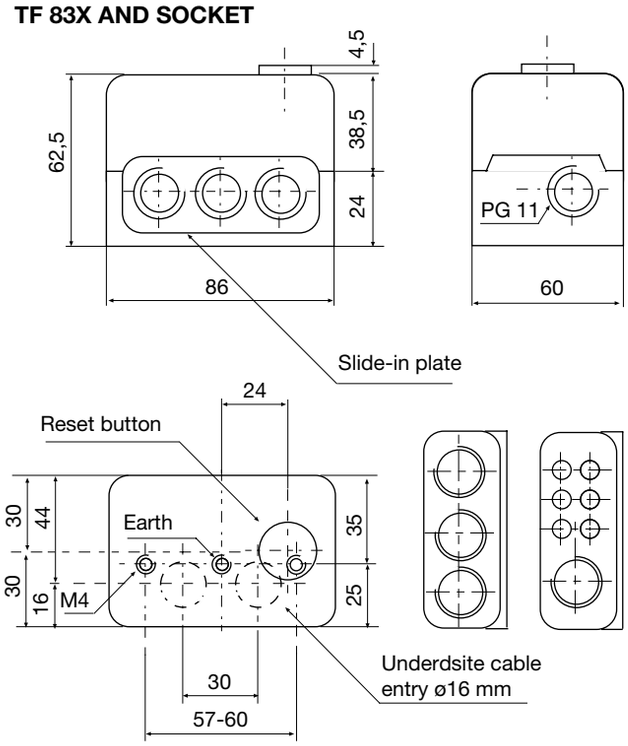

HOLDER MZ 770 S

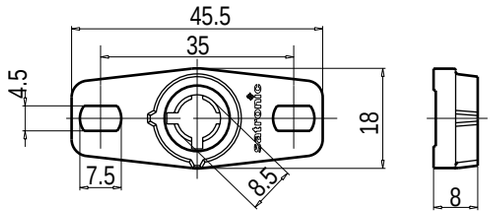

SHAFT MZ 770 S

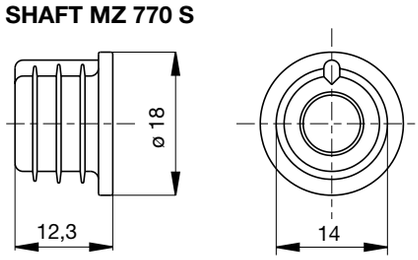

PHOTORESISTOR MZ 770 S

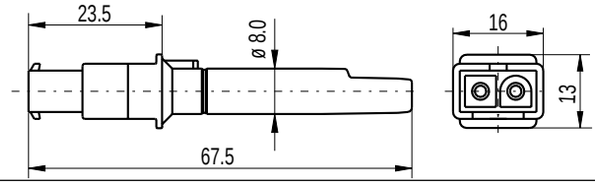

UVD 970

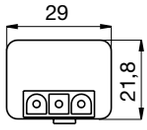

IRD 1010

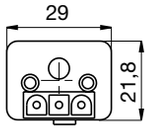

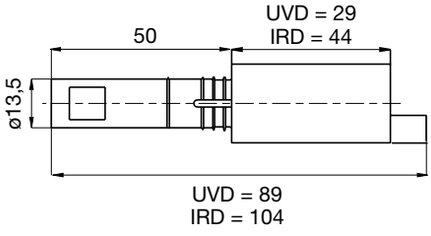

HOLDER M 74 FOR IRD OR UVD

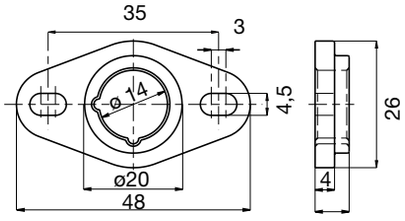

VARIATION IRD

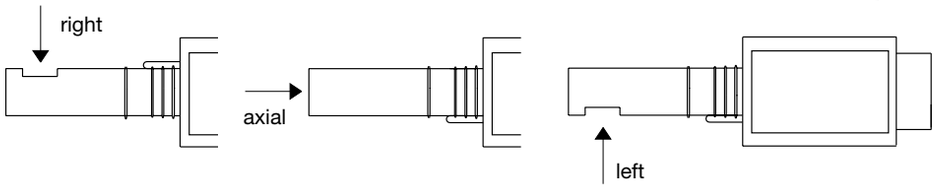

ORDERING INFORMATION

ITEM	DESIGNATION	ITEM NO.
Control box	Type TF 830.3	02231
Control box	Type TF 832.3	02431
Socket	Socket 701 ABEN	70001
Insert plate	PG-Plate	70502
optional	Cable entry plate	70501
Flame detector	MZ 770 S	50001
optional	MZ 770 S mounted in shaft	51001
optional	IRD 1010 right	16501
optional	IRD 1010 end-on	16502
optional	IRD 1010 left	16503
optional	UVD 970	16702
Support for flame detector	Holder for MZ	59101
optional	Holder M 74 for IRD, UVD	59074
Connectioncable IRD/UVD	Plug type, 3 core cable, 0.6 m, with tag wire ends	7236001
Connectioncable MZ	Plug type, 2 core cable, 0.5 m, with tag wire ends	7225001

The above ordering information refers to the standard version.
Special versions are also included in our product range.

Specifications subject to change without notice

Satronic AG
Brüelstrasse 7
Postfach 324
CH-8157 Dielsdorf

Oil Burner Safety Control

For 1- or 2-stage oil power burners up to 30kg/h capacity with or without oil preheater and intermittent operations.

Flame detection:
- **Photoresistor MZ 770 S**
- **Infrared-flicker detector IRD 1010**
- **UV solid state sensor UVD 970**

APPLICATION RANGE

The TF 834.3 or TF 836.3 oil burner safety control boxes are suitable to control and monitor oil power burner up to 30 kg/h capacity (approved and certified according to EN230).
A special contact in the control unit short-circuits the thermo-switch of the oil preheater as soon as the burner is operating and the flame signal is present. Therefore interruption of the burner due to decreasing oil temperature (e.g. in case of high oil flow) can be prevented.
If the control box goes into lock-out mode, the oil preheater power supply is also disconnected.

TYPES AVAILABLE

TF 834.2	1-stage operation post-ignition time ca. 20 sec. low voltage protection according to EN230
TF 834 E.3	1-stage operation no post-ignition low voltage protection according to EN230.
TF 836.3	2-stage operation post-ignition time 2-4 sec. low voltage protection according to EN230

CONSTRUCTIONAL FEATURES

The control box circuitry is protected by a flame resistant, transparent plastic housing. It incorporates the thermo-mechanical, temperature compensated timer, flame check and reset circuits.
Manual reset from lockout is provided by a push button with an integrated lockout signal lamp. A central fixing screw locks the control box to the wiring base. The wiring base and control box have a positive plug-in arrangement, making it impossible to achieve an incorrect connection between the two parts. A variety of cable entry points provides utmost flexibility of electrical wiring.

The TF 834 and TF 834 E are fully compatible with the TF 734 and TF 734-2 respectively. Using the TF 83X.3 as a replacement, the flame detector IRD 911 must be replaced by its compatible type IRD 1010.
An optional extension button (item no. 70601) compensates for height differences.



TECHNICAL DATA

Operating voltage		220/240 V (-15..+10%) 50 Hz (40-60Hz)
Fuse rating		10 A fast, 6 A slow
Power consumption		ca. 5 VA
Max. load per output		
- terminal 3		1.5 A, cos φ 0.2
- terminal 4		4.0 A, cos φ 0.4
- terminal 5		0.5 A, cos φ 0.4
- terminal 6		4.0 A, cos φ 0.4
- terminal 7		0.1 A, cos φ 0.4
- terminal B		0.5 A, cos φ 0.4
total load		5.0 A, cos φ 0.4
Pre-purge time		ca. 12 sec.
Pre-ignition time		ca. 12 sec.
Post-ignition time	TF 834.3	ca. 20 sec.
	TF 834 E.3	none
	TF 836.3	ca. 2-4 sec
Delay time to oil valve 2		ca. 20 sec. (TF 836.3)
Lockout safety time		10 sec.
Reset time from lockout		ca. 60 sec
Flame detector:		
MZ 770 S		side-on and end-on viewing
Light sensitivity MZ 770 S		> 6 Lux
IRD 1010		side-on or end-on viewing
UVD 970		end-on viewing
Sensor operating current		min. 30 µA
Weight incl. wiring base		0.25 kg
Mounting position		any
Protection class		IP44
Recommended ambient operating temperature for control and flame detector		0°C...+60°C
approved and certified according to European standards		EN 230

0730.11-00-e/04/99

APPLICATION NOTES

1. Flame control

The following detectors can be used for flame control:
- For yellow oil flame: photoresistor MZ 770 S
- for blue or yellow flame: infrared-flicker detector type IRD 1010 or as alternative the UV solid state sensor UVD 970.

Using the photo resistor MZ 770 S, the no flame signal is generated at light levels below 3 Lux with respect to the operating cycle of the control. According to EN 230 stray light safety level has to be established in conjunction with the accompanying burner.
Connecting the IRD 1010 or the UVD 970, the correct wiring has to be observed.

2. Burner control

With oil preheater:
The fuel heater of the burner must have a temperature control switch. The closing contact-switch of the preheater has to be connected between terminals 4 and 6. A special contact in the control unit-connects the thermo-switch of the heater as soon as the burner is operating and a photocurrent is generated. Therefore an interruption of the burner operation due to a decrease in oil temperature is prevented (e.g. in case of high oil flow).
According to EN 230 A2.1, the short circuiting of the thermo-switch is allowed only for an oil flow of max. 10 kg/h. Burners with a higher throughput have to shut down if the oil temperature gets below the allowed minimum. In such a case the thermo-switch has to be put in the phase-circuit and terminals 4 and 6 have to be connected with a link.

Without oil heater:
In such a case the terminals 4 and 6 have to be connected with a link.

3. Low-voltage protection

The start up of the burner can only take place if the mains voltage is higher than a limit which is 15% below nominal value. If the voltage drops below 160V, a start-up is prevented or – without allowing to release the fuel – the control box goes into lock out mode.

4. Safety

The design and control sequence of the TF 834.3, TF 834 E.3 and TF836.3 control boxes comply with the currently applicable European standards and regulations.

6. Mounting and electrical wiring

Wiring base:
- 3 earth terminals with additional terminal for burner earthing
- 3 neutral terminals with internal permanent connection to neutral terminal (terminal 8)
- 2 spare auxiliary terminals
- 2 slide in plates and 2 easy-knockout holes (PG 11 thread), plus 2 easy-knockout holes in the bottom of the base facilitate the wiring.

General:
- The control box can be mounted in any position. The protection class is IP44 (water spray tight). Neither the control box nor the flame detector should be subjected to excessive vibration.

COMMISSIONING AND ROUTINE CHECKS

1. Important notes

- The controls must be installed by qualified personnel only. The relevant national regulations have to be observed.
- On commissioning the wiring has to be carefully checked according the appropriate diagram, Incorrect wiring can damage the unit and endanger the installation.
- The fuse rating has to ensure that the limits specified in TECHNICAL DATA will not be exceed. If these precautions are not observed, the effect of a short circuit can cause severe damage to the control and installation.
- For safety reasons a minimum of one control shut-down per 24 hours has to be observed.
- Disconnect the mains before the control box is plugged in or out!
- The control box is a safety device and must not be opened!

2. Function control

For safety reasons the flame detection system should be tested on commissioning the installation as well as after a service or longer shut-down.

a) Start-up with covered flame detector
   - After lock-out safety time is over the unit has to go in to lockout mode!

b) Start-up with exposed flame detector:
   - After 20 sec. pre-purge time the unit has to go into lockout mode!

c) Normal start-up with burner in the normal position, cover up the flame detector:
   - After start-up, and end of lock-out safety time the unit has to go into lockout mode!

3. Fault findings

Burner is not working:
- thermostat circuit open
- faulty electrical wiring
- mains voltage too low

Burner starts, but the flame does not establish, a lock out occurs:
- stray light on flame detector
- no ignition or no fuel
- mains voltage more than -15% below nominal value.

Burner starts, the flame establishes, but after the safety time, a lock out occurs:
- dirty or faulty flame detector
- insufficient light on detector
- sensitivity adjustment too low on IRD.

For a quick and safe diagnosis use the Satronic UP 940 burner test box.

CIRCUIT AND TIMING DIAGRAM TF 834.3

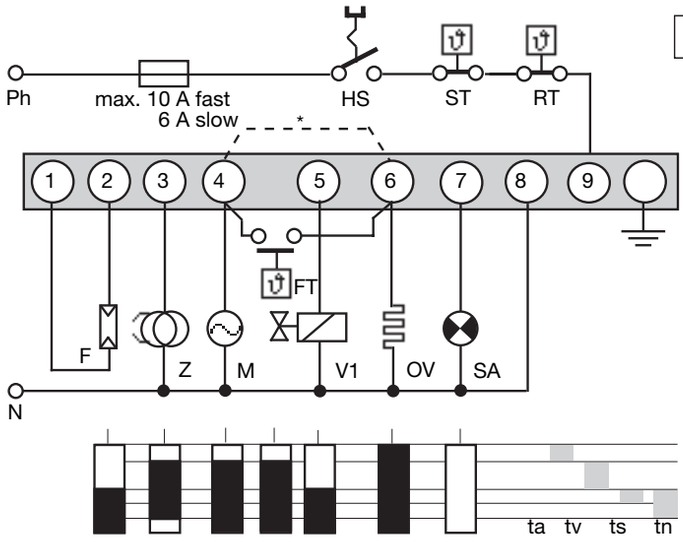

IRD-OR UVD CONNECTION

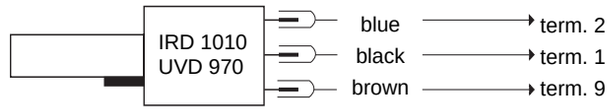

HS	Mains switch
ST	Limit thermostat
RT	Control thermostat
F	Flame detector MZ 770 S (IRD 1010/UVD 970 see ssparate diagram)
Z	Ignition
M	Burner motor
FT	Release thermostat oil preheater
V1	Oil solenoid valve
OV	Oil preheater
SA	External lock out signal
*	For burners without fuel heaters term. 4 and 6 have to be connected with a link
ta	Pre-heat-time oil preheater
tv	Pre-purge and pre-ignition time
tf	stray light monitoring
ts	Lock out safety time
tn	Post-ignition time

CIRCUIT AND TIMING DIAGRAM 836.3

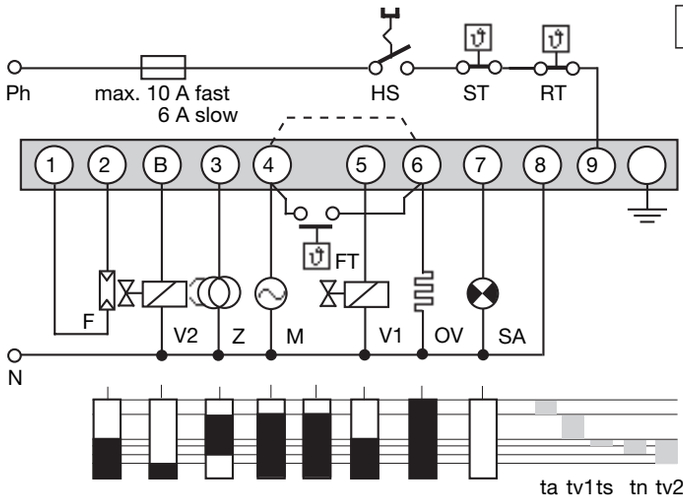

IRD-OR UVD CONNECTION

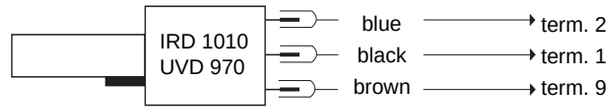

HS	Mains switch
ST	Limit thermostat
RT	Control thermostat
F	Flame detector MZ 770 S (IRD 1010/UVD 970 see separate diagram)
Z	Ignition
M	Burner motor
V1, V2	Solenoid valves
OV	Oil preheater
FT	Release thermostat oil preheater
SA	External lock out signal
*	With burners without fuel heaters term. 4 and 6 have to be connected with a link
ta	Pre-heat-time oil preheater
tv1	Pre-purge and pre-ignition time
ts	Lock out safety time
tn	Post-ignition time
tv2	Delay time to oil V2

SCHEMATIC DIAGRAMM TF 834.3

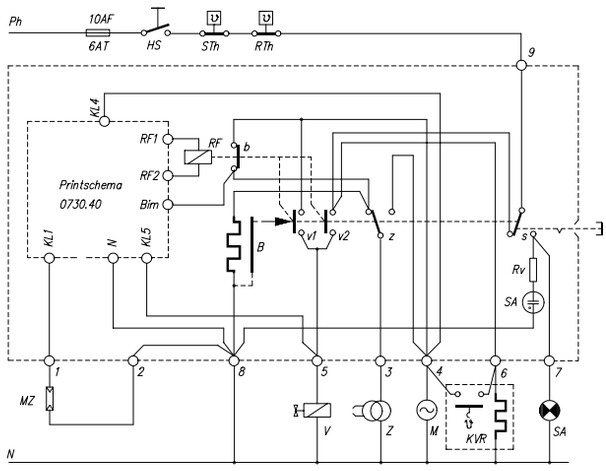

SCHEMATIC DIAGRAMM TF 836.3

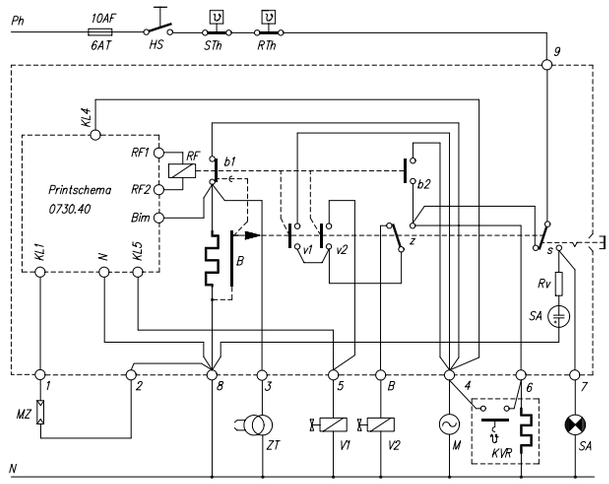

HS	Mains switch	F	Flame detector MZ 770 S, IRD 1010 or UVD 970	RF	Flame relay
ST	Limit thermostat	V	Valves	rl	low voltage relay
RT	Control thermostat	Z	Ignition	B	Thermomechanical timer
SA	Lock-out signal indicator	M	Burner motor	RV	Resistor
		OV	Oil preheater		

TF 83X AND SOCKET

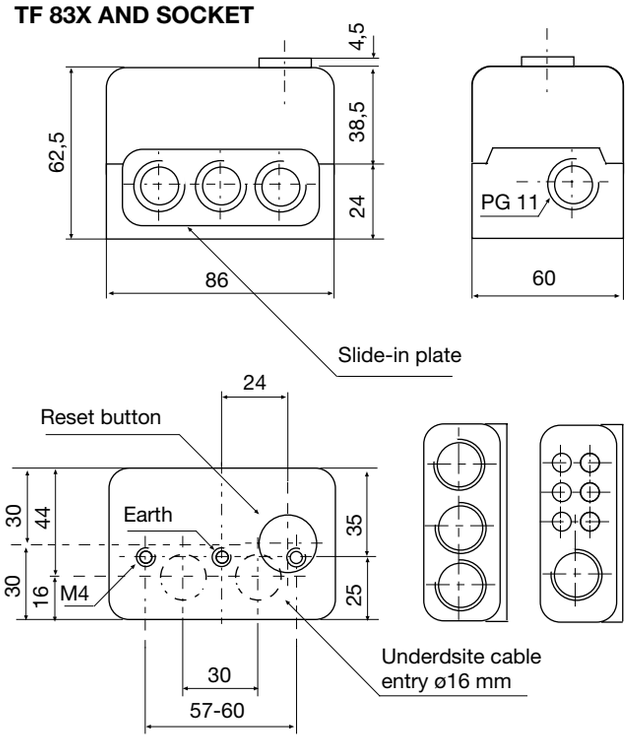

HOLDER MZ 770 S

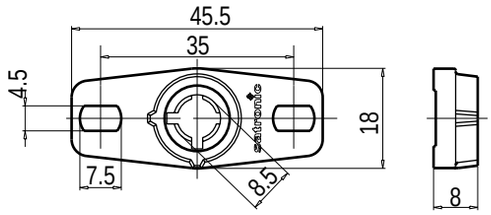

SHAFT MZ 770 S

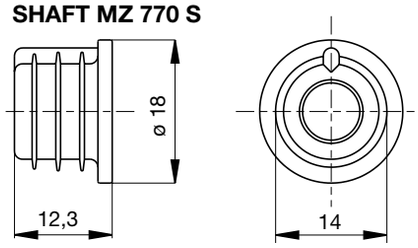

PHOTORESISTOR MZ 770 S

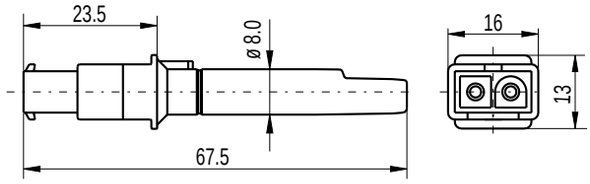

UVD 970

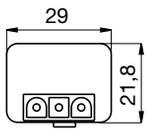

IRD 1010

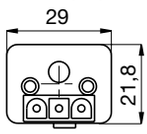

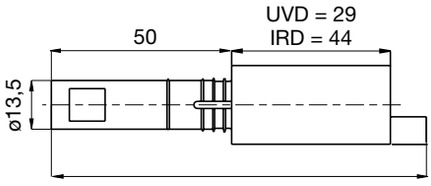

HOLDER M 74 FOR IRD OR UVD

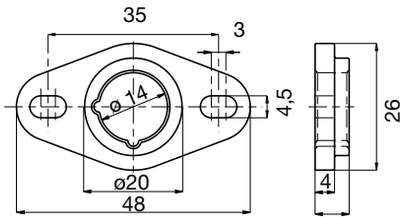

VARIATION IRD

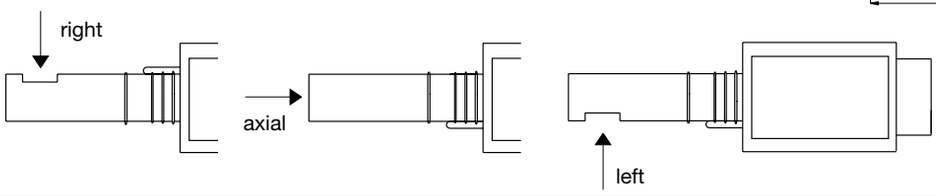

ORDERING INFORMATION

ITEM	DESIGNATION	ITEM NO.
Control box	Type TF 834.3	02234
Control box	Type TF 834 E.3	02235
Control box	Type TF 836.3	02236
Socket	Socket 701 ABEN	70001
Insert plate	PG-Plate	70502
optional	Cable entry plate	70501
Flame detector	MZ 770 S	50001
optional	MZ 770 S mounted in shaft	51001
optional	IRD 1010 right	16501
optional	IRD 1010 end-on	16502
optional	IRD 1010 left	16503
optional	UVD 970	16702
Support for flame detector	Holder for MZ	59101
optional	Holder M 74 for IRD, UVD	59074
Connectioncable	Plug type, 3 core cable, 0.6 m, with tag wire ends	7236001
Connectioncable	Plug type, 2 core cable, 0.5 m, with tag wire ends	7225001

The above ordering information refers to the standard version.
Special versions are also included in our product range.

Specifications subject to change without notice

Satronic AG
Brüelstrasse 7
Postfach 324
CH-8157 Dielsdorf

Ölfeuerungsautomat

Für Brenner mit Anfahrentlastung

Mögliche Flammenfühler:
- Fotowiderstand MZ 770

ANWENDUNGSBEREICH

Der Ölfeuerungsautomat TF 840 dient zusammen mit dem Fotowiderstand MZ 770 zur Steuerung und Überwachung von Gebläsebrennern mit Anfahrentlastung.

AUFBAU UND KONSTRUKTION

Der Automat hat repetierendes Verhalten, d.h. bei einem Ausfall der Flamme in Betrieb wird die Brennstoffzufuhr sofort unterbrochen und ein neuer Anlaufversuch eingeleitet. Bei Fremdlicht während eines Anlaufversuches geht das Gerät in Störstellung. Anschlussklemmen sind vorgesehen für Fotowiderstand, Zündtrafo, Motor, Ventil 1. Stufe, Ventil 2. Stufe und externe Störanzeige.
Die Automatik ist in ein steckbares Kunststoffgehäuse eingebaut. An der Geräteoberseite befinden sich der Entriegelungsknopf mit optischer Störanzeige und die Schraube zur Zentralbefestigung. Der Stecksockel kann mit zusätzlichen Schlaufklemmen ausgerüstet werden und erlaubt zusammen mit den verschiedenen Kabeleinführungsmöglichkeiten eine rationelle Verdrahtung.

ACHTUNG

Wird TF 840 als Ersatz für TF 740-1 eingesetzt, muss unbedingt auch der Fotowiderstand getauscht werden. (MZ 770 statt FZ 711).

FOTOWIDERSTAND MZ

(geeignet für radialen und achsialen Lichteinfall)

Mit dem Kleinfotowiderstand MZ 770 erfolgt im Mittel die Dunkelmeldung aus der Betriebsstellung des Automaten bei weniger als 3 Lux. Gemäss DIN 4787, Teil 1, Abschnitt 4.3.4 muss somit die Fremdlichtsicherheit des Flammenwächters in Verbindung mit dem zugehörigen Brenner ermittelt werden.

TECHNISCHE DATEN

Betriebsspannung	220 / 240 V (-15... +10%) 50 Hz (40 - 60 Hz)
Vorsicherung	Max. 10 A flink, 6 A träge
Eigenverbrauch	5 VA
Max. Belastung pro Ausgang	4 A
Totale Belastung	6 A
Zugelassen für Ölleistung	bis 30 kg/h nach DIN 4787
Vorspülzeit	ca. 12 sec.
Vorzündzeit	ca. 12 sec.
Nachzündzeit	ca. 25 sec.
Verzögerung 2. Stufe	3 - 5 sec.
Sicherheitszeit	10 sec.
Wartezeit nach Störabschaltung	ca. 60 sec.
Umgebungstemperatur Gerät und Fotowiderstand	-20° C... +60° C
Lichtempfindlichkeit MZ	besser 4 Lux
Schutzart	IP 43
Gewicht inkl. Sockel	0,25 kg
Einbaulage	beliebig

Vor Inbetriebnahme der Anlage ist die Verdrahtung nachzuprüfen. Fehlverdrahtungen führen zur Beschädigung des Überwachungsgerätes und gefährden die Sicherheit der Anlage.
Das Gerät darf nur ein- oder ausgesteckt werden, wenn der Hauptschalter auf "Aus" steht.
Fremdlichteinfall auf die Fotozelle, z.B. aus der Brennerumgebung durch ein Schauglas oder von nachglühender Schamottierung, muss verhindert werden. Nur dann ist eine störungsfreie Funktion der Anlage gewährleistet.

Funktionskontrollen

Bei Inbetriebsetzung und nach einer Revision des Brenners, sind folgende Kontrollen durchzuführen:
Anlauf bei verdunkeltem Fotowiderstand:
- Gerät geht auf Störung

Anlauf bei belichtetem Fotowiderstand:
- Gerät geht auf Störung

Normaler Anlauf; wenn Brenner in Betrieb Fotow.verdunkeln:
- Zündung muss einschalten, nach Ablauf der Sicherheitszeit muss das Gerät auf Störung schalten.

MASSBILD TF 840 MIT SOCKEL

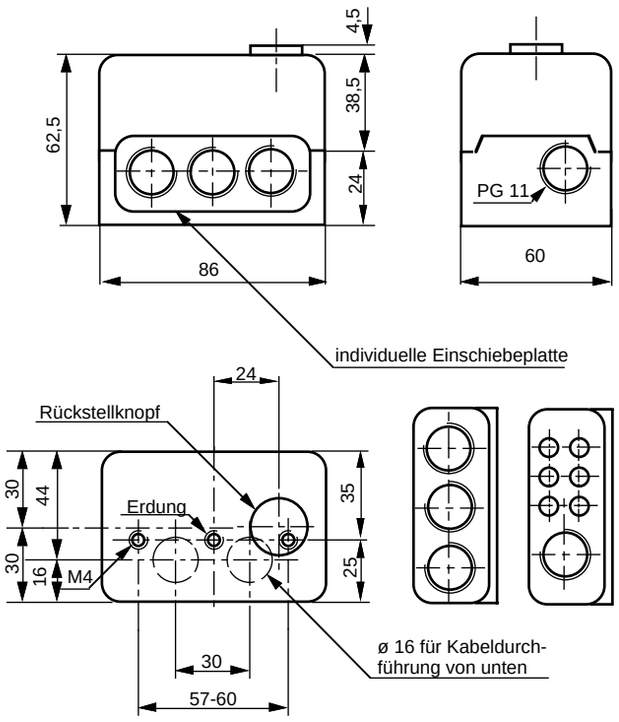

KLEINFOTOWIDERSTAND MZ 770

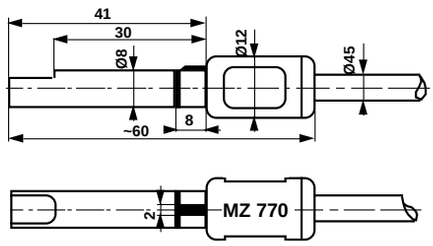

STECKSCHAFT MZ 770 / FZ 711

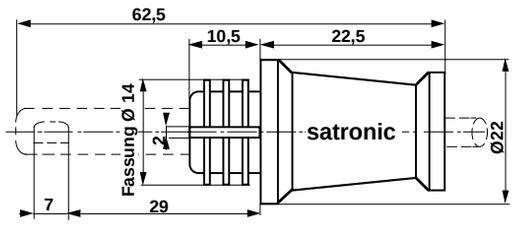

HALTER ZU MZ 770

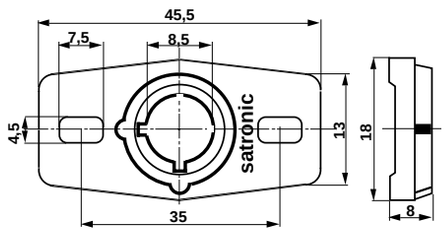

ANSCHLUSSCHEMA UND ABLAUFDIAGRAMM

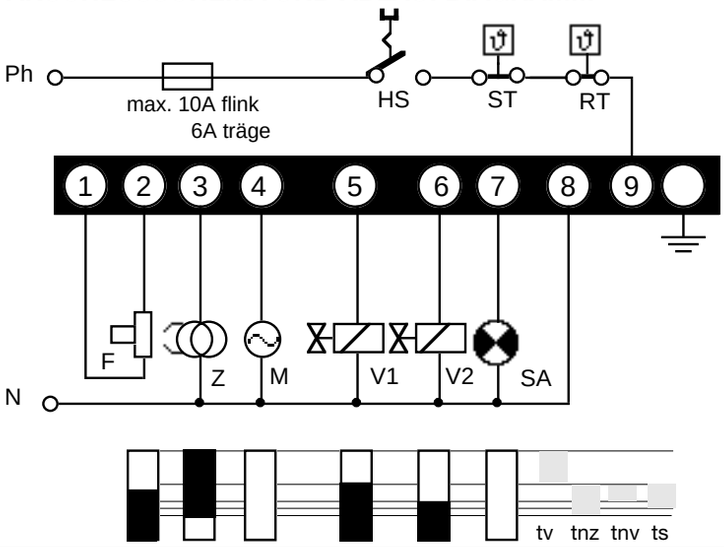

HS	Hauptschalter
ST	Sicherheitszeit
RT	Regelthermostat
FZ	Fotowiderstand MZ 770
Z	Zündung
M	Brennmotor mit Magnetventil
V1	Magnetventil erste Suffe
V2	Magnetventil zweite Stufe
SA	Externe Störung
tv	Vorzündzeit und Vorspülzeit
ts	Sicherheitszeit
tnz	Nachzündzeit
tnv	Verzögerung 2. Stufe

SICHERHEITEN UND SCHALTFUNKTIONEN

Bei einem Flammenausfall während dem Betrieb wird die Brennstoffzufuhr sofort abgeschaltet. Das Gerät macht einen neuen Anlaufversuch mit Vorspülung und Nachzündung. Bildet sich keine Flamme, geht das Gerät nach Ablauf der Sicherheitszeit auf Störung.

Nach einem Netzunterbruch findet in jedem Fall ein neuer Anlauf statt. Die Wartezeit nach einer Störabschaltung beträgt 60 sec. Nach Ablauf dieser Zeit kann das Gerät entstört werden. Bei Fremdlicht während der Vorspülzeit schaltet das Gerät nach Ablauf der Vorspülzeit auf Störstellung.

FEHLERMÖGLICHKEITEN

Brenner geht nicht in Betrieb:
- Elektrische Zuleitung fehlerhaft, Thermostat AUS

Automat geht bei Anlaufversuch ohne Flammenbildung auf Störung:
- Fremdlicht auf Fotowiderstand
- keine Zündung oder keine Brennstoffzufuhr

Brenner läuft an, Flamme bildet sich, nach Ablauf der Sicherheitszeit geht der Automat auf Störung:
- Fotowiderstand defekt oder verschmutzt.
- Fotozellenzuleitung defekt oder zu wenig Licht von der Flamme (Fotostrom kleiner als 24 µA nach Bildung der Flamme, gemessen mit Messockel UP 714 M).

Satronic AG
Brüelstrasse 7
Postfach 324
CH-8157 Dielsdorf

Ölfeuerungsautomat

Für Gebläsebrenner mit Anfahrentlastung bis 30 kg/h, im intermittierenden Betrieb, mit oder ohne Ölvorwärmung, 1- oder 2-stufig, voller Unterspannungsschutz
Flammenfühler:
- Fotowiderstand MZ 770 S
- Infrarot-Flackerdetektor IRD 1010
- UV-Halbleitersensor UVD 970

ANWENDUNGSBEREICH

Der Ölfeuerungsautomat TF 844.3 steuert und überwacht Gebläsebrenner mit Anfahrentlastung, mit oder ohne Ölvorwärmer, mit einem Ölverbrauch bis 30 kg/h (geprüft und zugelassen nach EN 230).
Ein spezieller Kontakt im Feuerungsautomaten überbrückt den Freigabethermostaten des Ölvorwärmers sobald der Brenner in Betrieb und ein Flammensignal gegeben ist. Damit wird ein Unterbrechen des Betriebsablaufes infolge sinkender Öltemperatur (z.B. hohe Durchgangsleistung) verhindert.
Bei einer Störabschaltung des Brenners wird auch der Ölvorwärmer spannungslos geschaltet.

TYPENÜBERSICHT

TF 844.3	2-stufige Betriebsweise Nachzündzeit 3 - 5 sec. Unterspannungssicherheit nach EN 230

AUFBAU UND KONSTRUKTION

Die Automatik ist gut geschützt in einem schwer entflammbaren, transparenten und steckbaren Kunststoffgehäuse eingebaut und beinhaltet das thermomechanische, temperaturkompensierte Zeitglied, den Flammenwächterteil und die Entriegelungseinrichtung.
An der Geräteoberseite befinden sich die Leuchttaste für Störanzeige und Entriegelung sowie die Schraube zur Zentralbefestigung.
Der Stecksockel kann mit zusätzlichen Schlaufklemmen ausgerüstet werden und erlaubt zusammen mit den verschiedenen Kabeleinführungsmöglichkeiten eine rationelle Verdrahtung. Bei 2-stufigen Brennern muss der Gerätesockel Typ 701 TTG-EN (Art. Nr. 70101) oder 701-TTG-ENCD (Art. Nr. 70103) benutzt werden.

Der Ölfeuerungsautomat TF 844.3 ist voll austauschbar mit dem Typ TF 844, dabei muss darauf geachtet werden, dass anstelle des Flammenfühlers IRD 911 der kompatible Typ IRD 1010 eingesetzt wird.



TECHNISCHE DATEN

Betriebsspannung	220 / 240 V (-15... +10%) 50 Hz (40 - 60 Hz)
Vorsicherung	10 A flink, 6 A träge
Eigenverbrauch	ca. 5 VA
Max. Belastung pro Ausgang	Kl. 3 1.5 A, cos φ 0.2 Kl. 4 4 A, cos φ 0.4 Kl. 5 0.5 A, cos φ 0.4 Kl. 6 4 A, cos φ 0.4 Kl. 7 0.1 A, cos φ 0.4 Kl. B 0.5 A, cos φ 0.4
total	5 A, cos φ 0.4
Vorspülzeit	ca. 12 sec.
Vorzündzeit	ca. 12 sec.
Nachzündzeit	3 - 5 sec.
Verzögerung 2. Stufe	3 - 5 sec.
Sicherheitszeit	10 sec.
Wartezeit nach Störabschaltung	ca. 60 sec.
Flammenfühler	
MZ 770 S	radiale und axiale Bel.
Lichtempfindlichkeit	besser 6 Lux
IRD 1010	radiale oder axiale Bel.
UVD 970	axiale Belichtung
Fühlerstrom Betrieb	min. 30 µA
Gewicht mit Sockel	0,25 kg
Einbaulage	beliebig
Schutzart	IP 44
Zugelassene Umgebungstemperatur für Gerät und Flammenfühler	0° C... +60° C
Zugelassen nach Euro-Normen	DIN 230

0730.13-00-d/04/99

ANWENDUNGSTECHNISCHE MERKMALE

1. Flammenüberwachung

Die Flammenüberwachung kann mit folgendem Flammenfühler erfolgen:

– Bei leuchtender Ölflamme mit Fotowiderstand Typ MZ 770 S (radialer oder axialer Einsatz).
– Bei blauer oder leuchtender Ölflamme mit Infrarot-Flackerdetektor Typ IRD 1010 oder als Alternative mit dem UV-Halbleitersensor UVD 970.

Mit dem Fotowiderstand MZ 770 S erfolgt im Mittel die Dunkelmeldung aus der Betriebsstellung des Automaten bei weniger als 3 Lux. Gemäss EN 230 muss die Fremdlichtsicherheit des Flammenwächters in Verbindung mit dem zugehörigen Brenner ermittelt werden.
Bei Anschluss des IRD 1010 oder UVD 970 ist auf richtige Verdrahtung zu achten.

2. Brennersteuerung

Der Ölvorwärmer des Brenners muss mit einem Temperaturwächter ausgerüstet sein, dessen Schliesskontakt zwischen die Klemmen 4 und 6 zu schalten ist.
Ein spezieller Kontakt im Gerät überbrückt den Freigabethermostaten des Ölvorwärmers, sobald der Brenner in Betrieb geht und ein Fotostrom fliesst. Damit wird ein Unterbrechen des Betriebsablaufes infolge sinkender Öltemperatur (z.B. hohe Durchsatzleistung) verhindert.
Gemäss EN 230 A 2.1, ist die interne Überbrückung des Ölvorwärmer-Freigabethermostaten nur bis zu einer Durchsatzleistung von max. 10 kg/h Öl erlaubt.
Brenner mit höherer Leistung müssen bei Unterschreiten der erforderlichen Öltemperatur abschalten. Der Freigabethermostat muss dann in der Phasenzuleitung angeordnet und Klemme 4 mit 6 gebrückt werden.
Bei Brennern ohne Ölvorwärmer muss Klemme 4 mit Klemme 6 verbunden werden.

3. Netzspannungsüberwachung

Innerhalb einer Spannungstoleranz bis -15% ist ein Anlauf gewährleistet. Beträgt die Netzspannung weniger als 160 V, wird ein Brennerstart verhindert oder – ohne Ölfreigabe – eine Störabschaltung ausgelöst.

4. Sicherheit

Bezüglich Konstruktion und Programmablauf entspricht der Feuerungsautomat TF 844.3 den zur Zeit geltenden europäischen Normen und Vorschriften.

5. Montage und Elektroinstallation

Sockelseitig:

– 3 Erdleiterklemmen mit zusätzlicher Lasche für die Brennererdung
– 3 Nulleiterklemmen mit interner, fester Verbindung zum Nulleitereingang Klemme 8
– 2 unabhängige, beliebig benutzbare Schlaufklemmen
– 2 individuelle Einschiebeplatten und 2 feste Ausbruchöffnungen mit Gewinde PG 11, sowie 2 Ausbruchöffnungen von unten erleichtern die Sockelverdrahtung.

Allgemein:

– Einbaulage beliebig, Schutzart IP 44 (spritzwassersicher). Automat und Fühler sollen jedoch nicht über mässigen Vibrationen ausgesetzt werden.
– Bei der Montage sind die einschlägigen Installationsvorschriften zu beachten.

INBETRIEBNAHME UND UNTERHALT

1. Wichtige Hinweise

– Vor Inbetriebnahme ist die Verdrahtung genau nachzuprüfen. Fehlverdrahtungen können das Gerät beschädigen und die Sicherheit der Anlage gefährden.
– Die Vorsicherung ist so zu wählen, dass die unter den Technischen Daten angegebenen Grenzwerte keinesfalls überschritten werden. Das Nichtbeachten dieser Vorschrift kann bei einem Kurzschluss schwerwiegende Folgen für Steuergerät oder Anlage haben.
– Aus sicherheitstechnischen Gründen muss mindestens eine Regelabschaltung pro 24 Std. sichergestellt sein.
– Steuergerät nur spannungslos ein- und ausstecken.
– Feuerungsautomaten sind Sicherheitsgeräte und dürfen nicht geöffnet werden.

2. Funktionskontrolle

Eine sicherheitstechnische Überprüfung der Flammenüberwachung muss sowohl bei der erstmaligen Inbetriebnahme wie auch nach Revisionen oder längerem Stillstand der Anlage vorgenommen werden.

Bedingung: Netzspannung muss > 187 V_{eff} sein.

a) Anlaufversuch mit verdunkeltem Flammenfühler:
   - Nach Ende der Sicherheitszeit
   -> Störung
b) Anlauf mit belichtetem Flammenfühler:
   - Nach ca. 20 sec. Vorbelüftung
   -> Störung
c) Normaler Anlauf; wenn Brenner in Betrieb, Flammenfühler verdunkeln:
   - Neuer Anlaufversuch, nach Ende der Sicherheitszeit
   -> Störung

3. Fehlermöglichkeiten

Brenner geht nicht in Betrieb:
- Thermostat aus
- Elektrische Zuleitung fehlerhaft
- Ölvorwärmer defekt
- Netzspannung zu tief

Nach Anlaufversuch ohne Flammenbildung Störabschaltung:
- Fremdlicht auf Flammenfühler
- Brennstoffzufuhr oder Zündung fehlt
- Netzspannung mehr als 15% unter Nennwert

Brenner läuft an, Flamme bildet sich, nach Ablauf der Sicherheitszeit Störabschaltung:
- Flammenfühler verschmutzt oder defekt
- Zu wenig Licht auf Flammenfühler
- Empfindlichkeit an IRD zu tief eingestellt.

Für eine schnelle und sichere Fehlerdiagnose eignet sich besonders das Brennerprüfgerät UP 940.

ANSCHLUSSSCHEMA UND ABLAUFDIAGRAMM TF 844.3

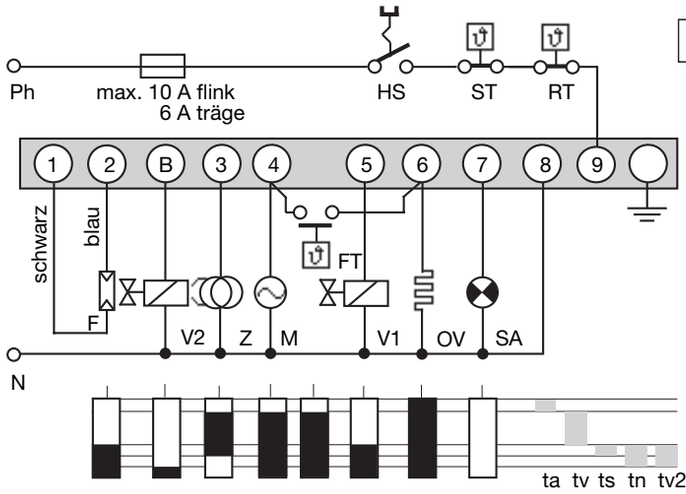

IRD- ODER UVD ANSCHLUSS

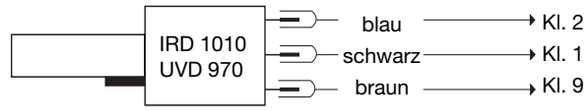

HS	Hauptschalter
ST	Sicherheitsthermostat
RT	Regelthermostat
F	Flammenfühler MZ 770 S IRD 1010 oder UVD 970 siehe separates Anschlussschema)
Z	Zündung
M	Brennermotor
FT	Freigabethermostat Ölvorwärmer
V	Magnetventil
OV	Ölvorwärmer
SA	Externe Störanzeige
*	Bei Brennern ohne Ölvorwärmung muss Klemme 4 mit Klemme 6 verbunden werden

ta	Aufheizzeit Ölvorwärmung
tv	Vorzündzeit und Vorspülung
ts	Sicherheitszeit
tn	Nachzündzeit
tv2	Verzögerung 2. Stufe

PRINZIPSCHEMA TF 844.3

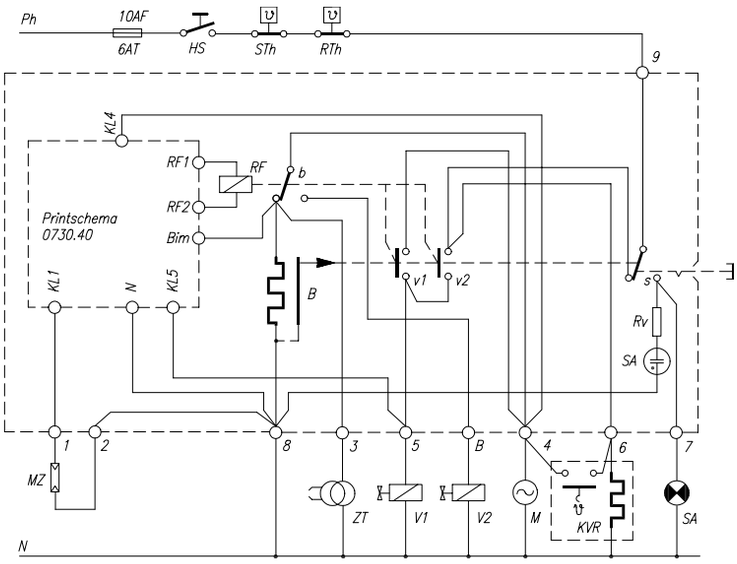

HS	Hauptschalter	MZ	Flammenfühler MZ 770 S oder IRD 1010	RF	Flammenrelais
STh	Sicherheitsthermostat	V	Ventile	B	Thermisches Zeitglied
RTh	Regelthermostat	ZT	Zündung	Rv	Vorwiderstand
SA	Externe Störanzeige	M	Brennermotor		
		KVR	Ölvorwärmer		

TF 8XX MIT SOCKEL

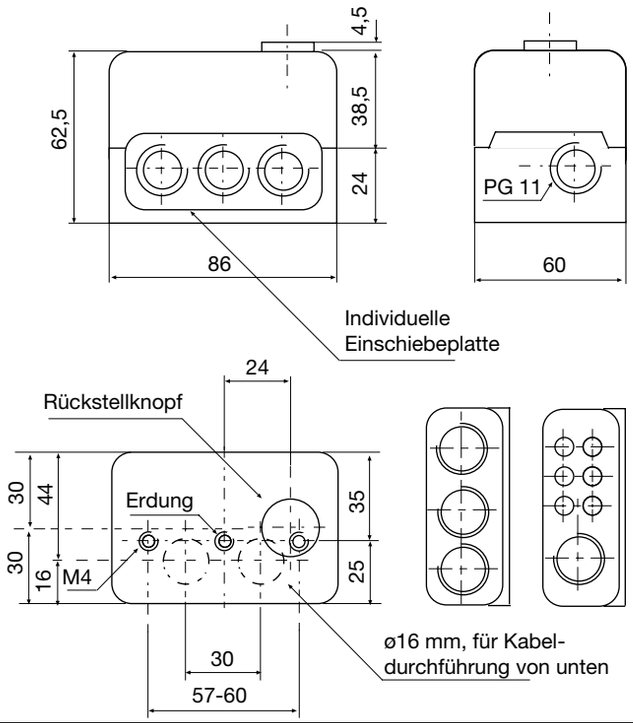

HALTER ZU MZ 770 S

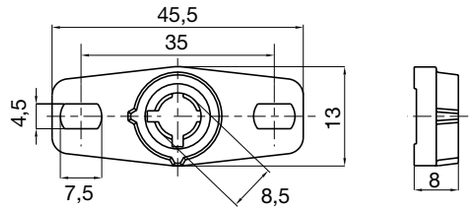

STECKSCHAFT MZ 770 S

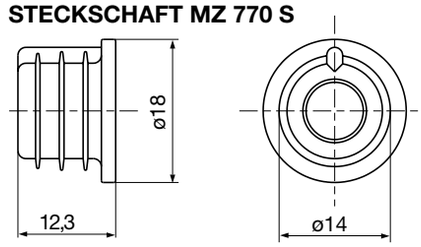

FOTOWIDERSTAND MZ 770 S

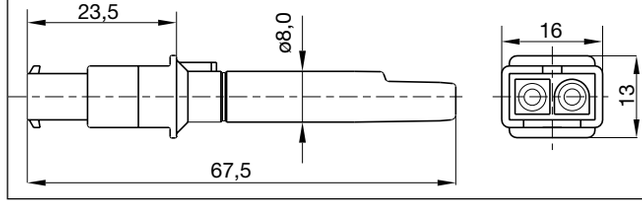

UVD 970

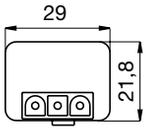

IRD 1010

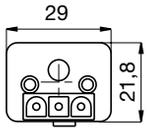

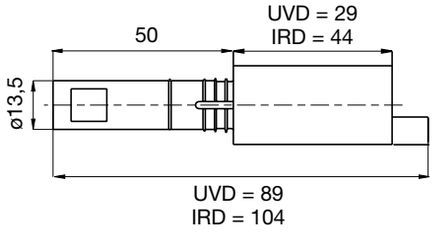

HALTER M 74 ZU IRD ODER UVD

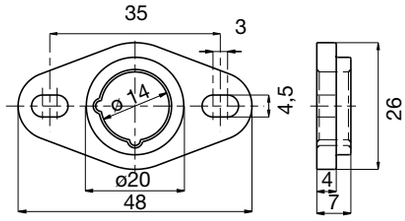

VARIANTEN IRD

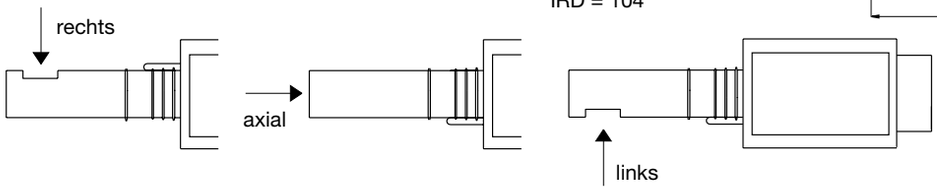

BESTELLANGABEN

ARTIKEL	BESTELLTEXT	ART. NR.
Steuergerät	Typ TF 844.3	02437
Sockel	Sockel 701 ABEN	70001
oder	Sockel 701 TTG-EN (für 2-stufen Betrieb)	70101
Einschiebeplatte	PG-Platte	70502
wahlweise	Kabelklemmplatte	70501
Flammenfühler	MZ 770 S	50001
wahlweise	MZ 770 S mit Steckschaft	51001
	IRD 911	16305
	IRD 1010 rechts	16501
	IRD 1010 axial	16502
	IRD 1010 links	16503
wahlweise	UVD 970	16702
Halter zu Flammenfühler MZ 770	MZ-Halter	59101
Halter zu Flammenfühler IRD	Halter M 74 zu IRD oder UVD	59074
Anschlusskabel	Fühlerkabel 3-polig, 0.6 m, mit Aderendhülsen	7236001
Anschlusskabel	Fühlerkabel 2-polig, 0.5 m, mit Aderendhülsen	7225001

Obige Bestellangaben beziehen sich auf die Normalausführung.
Das Verkaufsprogramm umfasst auch Spezialausführungen. Technische Änderungen vorbehalten.

Satronic AG
Brüelstrasse 7
Postfach 324
CH-8157 Dielsdorf

Oil burner safety control

For 1- or 2-stage oil burners up to 30 kg/h throughput and intermittent operation with or without oil preheating

Flame detection:
- Photo resistor MZ 770 S
- Infrared-flicker detector IRD 1010
- UV flame sensor UVD 970

INTRODUCTION

The TF 974 or TF 976 oil burner safety control boxes are suitable for oil burners which may be equipped with a oil preheater up to 30 kg/h capacity. The control boxes are approved and certified according to EN 230.

A special contact in the control unit short-circuits the thermo-switch of the fuel heater as soon as the burner is operating and the flame signal is present. Therefore interruption of the burner operation due to decreasing oil temperature can be prevented (e.g. in case of high oil flow).

If the control box goes into lock-out mode, the oil preheater power supply is also disconnected.

TYPES AVAILABLE

TF 974	1-stage operation post-ignition time ca. 20 sec. low voltage protection according to EN 230
TF 976	2-stage operation post-ignition time ca. 2 - 4 sec. low voltage protection according to EN 230

CONSTRUCTIONAL FEATURES

The control box circuitry is protected by a flame resistant, transparent housing. It incorporates the thermomechanical, temperature composated, flame check and reset circuits.

Manual reset from lockout is provided by a push button with an integrated lockout signal lamp. A central fixing screw locks the control box to the wiring base. The wiring base and control box have a positive plug-in arrangement, making it impossible to achieve an incorrect connection between the two parts.

A variety of cable entry points provides the utmost flexibility for electrical wiring.



TECHNICAL DATA

Operating voltage	220 / 240 V (-15... +10%) 50 Hz (40 - 60 Hz)	
Fuse rating	10 A fast, 6 A slow	
Power consumption	ca. 5 VA	
Max. current rating output terminal	term. 2 0.5 A, cos φ 0.4 term. 3 1.5 A, cos φ 0.2 term. 4 4 A, cos φ 0.4 term. 5 0.5 A, cos φ 0.4 term. 6 4 A, cos φ 0.4 terml. 8 0.1 A, cos φ 0.4	
total	5 A, cos φ 0.4	
Pre-purge time	ca. 12 sec.	
Pre-ignition time	ca. 12 sec.	
Post-ignition time	ca. 20 sec. 2 - 4 sec.	TF 974 TF 976
Delay time to oil valve V 2	ca. 20 sec.	TF 976
Lockout safety time	10 sec.	
Reset time from lockout	ca. 60 sec.	
Flame detector		
MZ 770 S	for side-on and end-on viewing	
Light sensitivity	> 6 Lux	
Sensor operating current	min. 30 µA	
IRD 1010	for side-on or end-on viewing	
UVD 970	end-on viewing	
Weight incl. wiring base	0,25 kg	
Mounting position	any	
Protection class	IP 40	
Recommended ambient operating temperature for control and flame detector	0° C... +60° C	
approved according to	EN 230	

UV SOLID STATE SENSOR UVD 970APPLICATION NOTES

1. Flame control

The following flame detectors can be used for flame control:

- For yellow oil flame: photoresistor MZ 770 S (side-on or end-on viewing).
- For blue or yellow oil flame: infrared-flame detector type IRD 1010 or as an alternative the UV solid state sensor UVD 970.

Generally, the no flamesignal is generated at light levels below 3 Lux with respect to the operating cycle of the control. According to EN 230 stray light safety level has to be established in conjunction with the accompanying burner. Connecting the IRD 1010 or UVD 970, the correct wiring has to be observed.

2. Burner control

The fuel heater of the burner must have a temperature control switch. The closing contact-switch of the preheater has to be connected between terminals 4 and 6. A special contact in the control unit-connects the thermoswitch of the heater as soon as the burner is operating and a photocurrent is generated. Therefore an interruption of the burner operation due to a decrease in oil temperature is prevented (e.g. high oil flow).
According to EN 230 A2.1, the short circuiting
of the thermoswitch is allowed only for an oil flow of max. 10 kg/h oil. Burners with a higher throughput have to shut down if the oil temperature gets below the allowed minimum. In such a case the thermoswitch has to be put in the phasecircuit and terminals 4 and 6 are connected with a link.
With burners without fuel heaters terminals 4 and 6 have to be connected with a jumper.

3. Low Voltage Protection

The start up of the burner can only take place if the mains voltage is higher than a limit which is 15% below nominal value. If the voltage drops below 160V, a start-up is prevented or – without allowing to release the fuel – the control box goes into lock out mode.

4. Safety

The design and the control sequence of the TF 974 and TF 976 control boxes comply with the currently applicable Eu-ropean standards and regulations.

5. Mounting and electrical wiring

Wiring base:

- 3 earth terminals with additional terminal for burner earthing
- 3 neutral terminals with internal permanent connection to neutral terminal (terminal 7)
- 2 spare auxiliary terminals
- 2 slide-in plates and 2 easy-knockout holes (PG 11 thread), plus 2 easy-knockout holes in the base bottom facilitate the base wiring.

General:

- Control box and flame detector should not be subjected to excessive vibration.
- The control box can be mounted in any position. The protection class is IP 40.

INSTALLATION INSTRUCTIONS AND MAINTENANCE

1. Important notes

- The controls must be installed by qualified personnel only. The relevant national regulations have to be observed.
- On commissioning the writing has to be carefully check according to the appropriate diagram. Incorrect wiring can damage the unit and endanger the installation.
- The fuse rating has to ensure that the limits specified in Technical Data will not be exceeded. If these precautions are not observed, the effect of a short circuit can cause severe damage to the control and installation.
- For safety reasons a minimum of one control shut-down per 24 hours has to be observed.
- Disconnect the mains before the control box is plugged in or out!
- The control box is a safety device and must not be opened!

2. Function control

For safety reasons the flame detection system should be tested on commissioning the installation as well as after a service or a longer shut-down.

a) Start-up with covered flame detector:
   - After lock-out safety time
   ->lockout

b) Start-up with exposed flame detector:
   - After ca. 20 sec. pre-purge:
   ->lockout

c) Normal start-up; with burner in the "normal" position, cover up the flame detector:
   - New start-up, after end of lock-out safety time
   ->lockout

3. Fault finding

Burner not working:

- faulty electrical wiring
- thermostat circuit open
- oil preheater defective
- mains voltage below 160V

Burner starts, flame not established = lockout:

- stray light on flame detector.
- no ignition or no fuel.
- mains voltage more than -15% below nominal value.

Burner starts, flame established, after safety time = lockout:

- dirty or faulty flame detector
- insufficient light on detector
- sensitivity adjustment too low on IRD

TF 9747976

CIRCUIT AND TIMING DIAGRAM TF 974

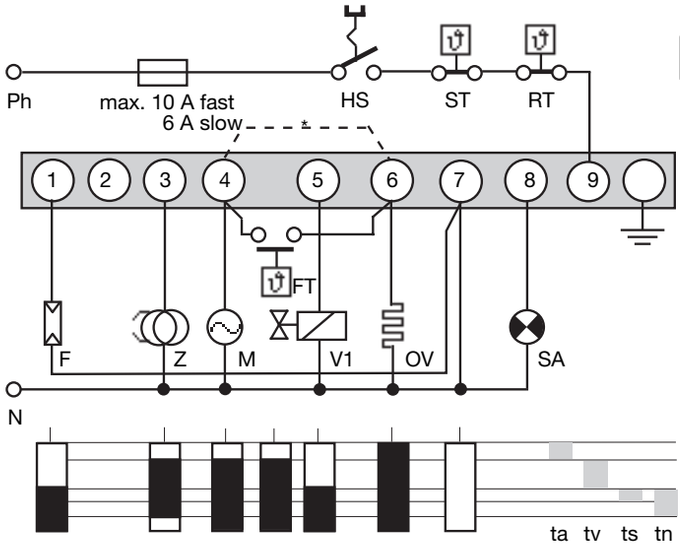

IRD - / UVD-CONNECTION

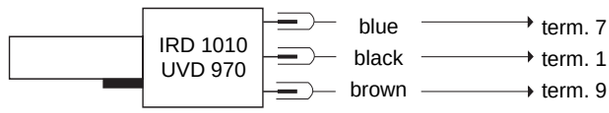

HS	Mains switch
ST	Limit thermostat
RT	Control thermostat
F	Flame detector MZ 770 S
	(IRD 1010/UVD 970 see separate diagram)
Z	Ignition
M	Burner motor (burner with solenoid valve)
FT	Release thermostat oil preheater
V	Oil solenoid valve
OV	Oil preheater
SA	External lock-out signal.
*	For burners without fuel heaters terminals 4 and 6 have to be connected with a link.
ta	Preheat-time oil preheater
tv	Pre-ignition time with or without pre-purge
ts	Lock-out safety time
tn	Post-ignition time

CIRCUIT AND TIMING DIAGRAM TF 976

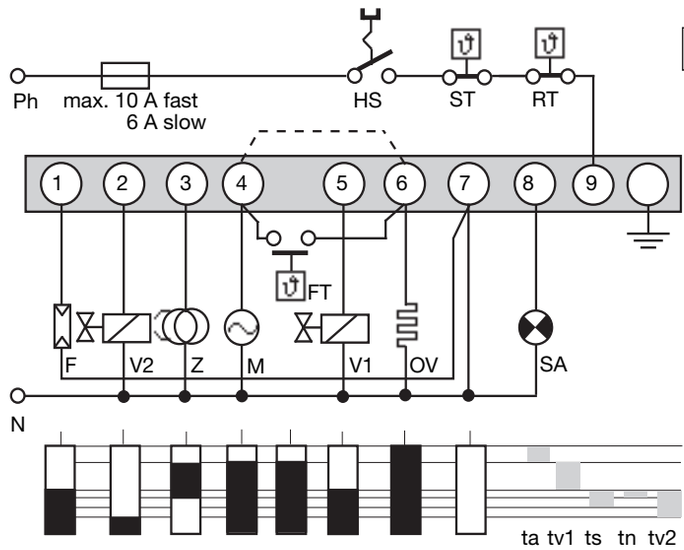

IRD - / UVD CONNECTION

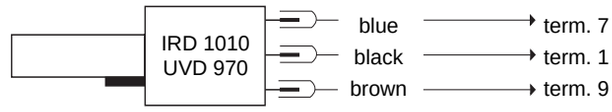

HS	Mains switch
ST	Limit thermostat
RT	Control thermostat
F	Flame detector MZ 770 S
	(IRD 1010/UVD 970 see separate diagram)
Z	Ignition
M	Burner motor (burner with solenoid valve)
V1, V2	Oil solenoid valves
FT	Release thermostat oil preheater
OV	Oil preheater
SA	External lock-out signal.
*	For burners without fuel heater terminals 4 and 6 have to be connected with a link
ta	Preheat-time oil preheater
tv1	Pre-ignition time with or without pre-purge
ts	Lock-out safety time
tn	Post ignition time
tv2	Delay 2nd stage

SCHEMATIC DIAGRAM TF 974

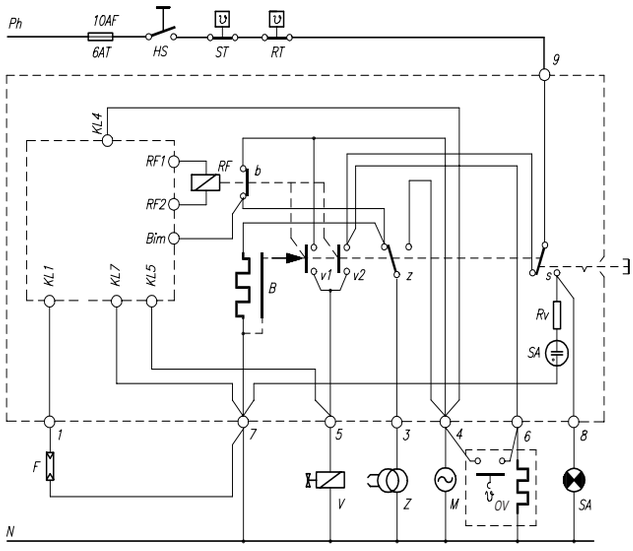

SCHEMATIC DIAGRAM TF 976

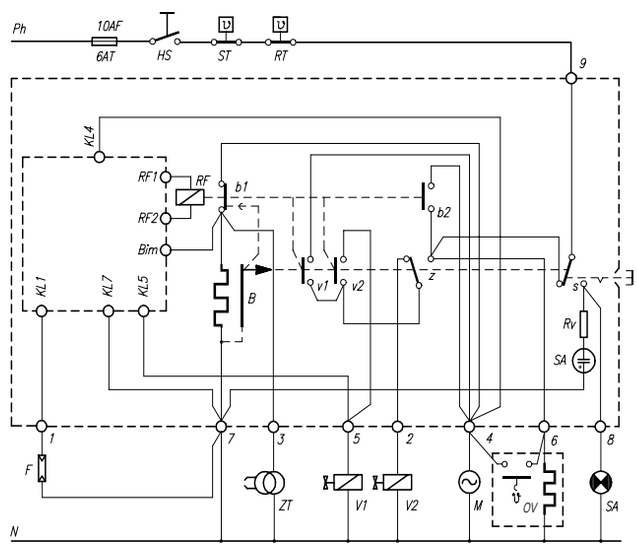

HS	Mains switch	F	Flame detector MZ 770 S	OV	Oil preheater
ST	Limit thermostat	V	Valves	RF	Flame relay
RT	Control thermostat	Z	Ignition	B	Thermomechanical timer
SA	Lock-out signal indicator	M	Burner motor	RV	Resistor

TF 974 / 976 AND SOCKET

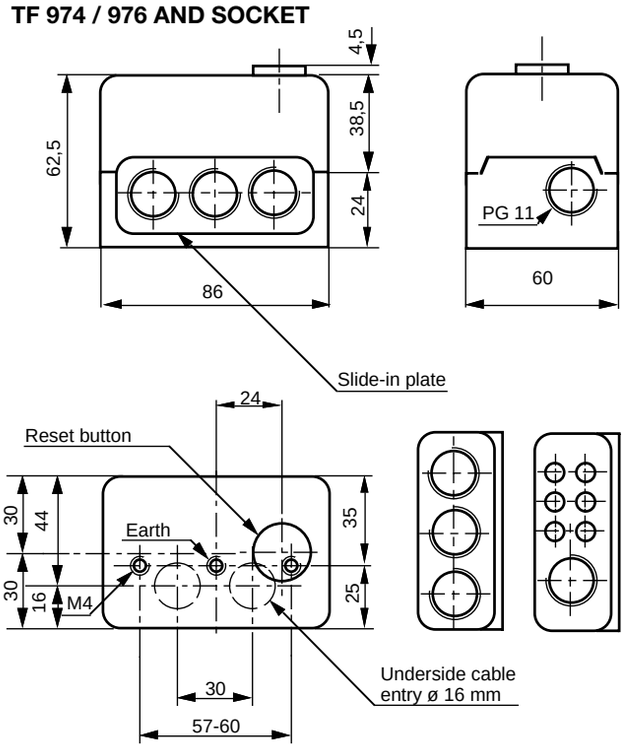

HOLDER FOR MZ 770 S

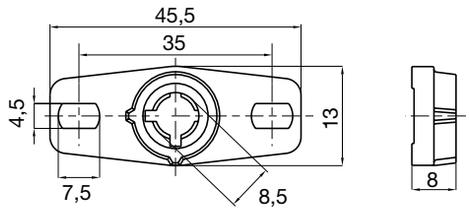

SHAFT MZ 770 S

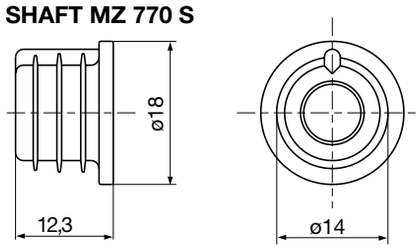

PHOTORESISTOR MZ 770 S

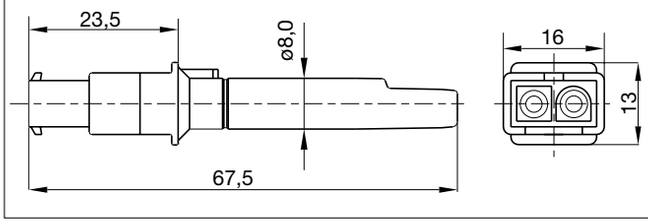

IRD 1010

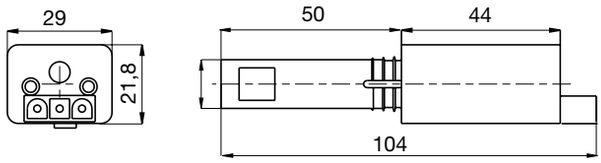

UVD 974

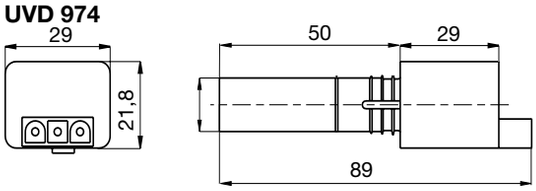

HOLDER M 74 FOR IRD OR UVD

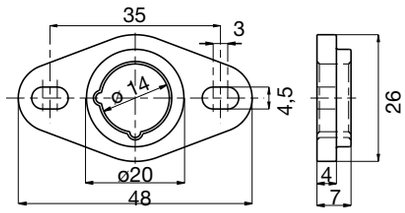

ORDERING INFORMATION

ITEM	DESIGNATION	ITEM NO.
Control box	Typ TF 974	02524
or	Typ TF 976	02526
Socket	Socket 701 ABEN 7	70011
Insert plate	PG-Plate	70502
optional	Cable entry plate	70501
Flame detector	MZ 770 S	50001
optional	MZ 770 S with shaft	51001
optional	IRD 1010 right	16501
optional	IRD 1010 end-on	16502
optional	IRD 1010 left	16503
optional	UVD 970	16702
Support for flame detector	Holder for MZ 770 S	59100
optional	Holder M74 for IRD or UVD	59074
Connectioncable	Plug type, 3 core cable, 0.6 m with tag wire ends	7236001
Connectioncable	Plug type, 2 core cable, 0.6 m with tag wire ends	7225001

The above ordering information refers to the standard version.
Special versions are also included in our product range.

Specifications subject to change without notice

Satronic AG
Brüelstrasse 7
Postfach 324
CH-8157 Dielsdorf

Oil Burner Safety Control

For 1- or 2-stage oil burners up to 30 kg/h throughput and intermittent operation

Flame detection:
- Photoresistor MZ 770 S
- Infrared-flicker detector IRD 1010
- UV flame sensor UVD 970



INTRODUCTION

The DKO 970/972 oil burner safety control boxes are suitable for oil burners with throughputs up to 30 kg/h. They are approved and certified according to the applicable European standards and regulations.
The microprocessor-based programming sequence ensures extremely stable timings independent of voltage variations, ambient temperature and/or switch-on cycles. The built-in information system not only provides a continuous monitoring of the actual state of the box (very helpful especially for monitoring the start-up phase) but also informs about the cause of a possible lock out. The lock out cause is stored in such a way that it can be retrieved even after a power failure.
The control box is designed for maximum safety in case of fluctuations in the voltage supply. If the mains voltage drops below the permitted level, operation is interrupted and the control box automatically prevents the start sequence from being repeated. In this way, the safety of the system is not put at risk by a drop in the mains voltage. This low-voltage protection works not only during start-up but also permanently during operation.

TYPES AVAILABLE

DKO 970	1-stage operation
DKO 972	2-stage operation

CONSTRUCTIONAL FEATURES

The control box circuitry is protected by a flame resistant, transparent plug-in type plastic housing. A central fixing screw locks the control box to the wiring base.
The plug-in control box incorporates the microprocessor based timer, flame check and reset circuits.
Manual reset from lock out and set to lock out is provided by a push button with an integrated LED information system.
The wiring base S98 is equipped with spare- and extraterminals and allows together with a variety of cable entry points utmost flexibility of electrical wiring.
The DKO 970 is compatible with the TF 801, TF 801.2, TF 830, TF 830.2. The DKO 972 is in addition compatible with the TF 802, TF 802.2, TF 832, TF 832.2.

Using the DKO 970/972 as a replacement for the TF 801 or TF 801.2, the flame sensor FZ 711 S must be replaced by its compatible type MZ 770 S.

TECHNICAL DATA

Operating voltage	220 / 240 V (-15... +10%) 50 Hz (±5%)
Fuse rating	10 A fast, 6 A slow
Power consumption	ca. 15 VA
Max. load per output	
- term. 3 ignition trafo	1.0 A, cos φ 0.2
- term. 4 motor	2.0 A, cos φ 0.4
- term. 5 + 6 solenoid valves	0,5 A, cos φ 0.4
- term. 7 alarm indicator	0,5 A, cos φ 0.4
total load	4.0 A, cos φ 0.4
max. 6 A during 0,5 sec	
Reset time from lock out	none
Flame detectors	< 2 m length of cable
MZ 770 S	side-on and end-on viewing
Light sensitivity	better 6 Lux
IRD 1010	side-on or end-on viewing
UVD 970	end-on viewing
Weight incl. Wiring base	190 g
Mounting position	any
Protection class	IP 40
Approved ambient parameter for control and flame detector	max. 95% bei 30° C
- for operation	0° C... +60° C
- for storage	-20° C... +80° C
Build-up of ice, penetration of water and condensing water are	inadmissible
Approvals according to European standards	EN 230, as well as all other relevant Directives and standards

Timings (sec.)

Model	waiting time start	Pre-purge and pre-ignition time **tv1**	stray light monitoring **tf**	safety time **ts**	post-ignition time after V1 **tn**	delay time to V2 DKO 972 only **tv2**
05	0	15	5	5	7	20

APPLICATION FEATURES

1. Information system

The information system is microprocessor based and reports on all aspects of burner control box operation and flame supervision. It informs continuously about the actual programming sequence the unit is just performing. Besides monitoring of the programming sequence it also allows to identify errors during start-up of operation without any additional testing devices. The automatically performed diagnoses is a valuable tool which facilitates service/ maintenance work and therefore saves costs. The analyses of the error cause can be done directly on stage or if not possible afterwards as the lock out reason is stored in a non-volatile lock out mode memory.
The information system communicates with the outside world using a LED (the used Flash-Code is similar to the Morse-Code). The messages are optically transmitted by flashing appropriately a LED. Using an (optional) additional terminal the messages can be recorded and displayed in easy readable form.

1.1 Programming sequence display

The built-in microprocessor controls not only the programming sequence but the information system too. The individual phases of the programming sequence are displayed as Flash-Code.
The following messages can be distinguished:

Message	Flash-Code
pre-ignition tv1	▮ ▮ ▮ ▮ .
safety time ts post ignition tn	▮ ▮ ▮ .
delay time to valve V2 tv2	▮ ▮ ▮ ▮ .
running	▮ _
low mains voltage	▮ ▮ ▮ _

Description
▮ = short pulse
▮ = long pulse
. = short pause
_ = long pause

1.2 Lock-out diagnoses

In case of a failure the LED is permanently illuminated. Every 10 seconds the illumination is interrupted by a flash code, which indicates the cause of the error. Therefore the following sequence is performed which is repeated as long as the unit is not reset.

Sequence:

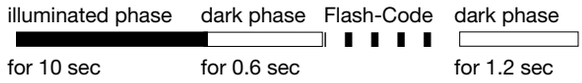

Error diagnosis

Error message	Flash-Code	Possible fault
lockout	▮ ▮ ▮ ▮ ▮	within lock out safety time no flame establishment
stray light	▮ ▮ ▮ ▮ ▮	stray light during monitored phase, detector may be faulty

Flash-Code for manual lock out

manual/external lock out (see also 3. lock out and reset)	▮ ▮ ▮ ▮ ▮ _ ▮ ▮ ▮ ▮ ▮ ▮

2. Flame control

The following detectors can be used for flame supervision:
– for yellow oil flame: photoresistor MZ 770 S (side-on and end-on viewing)
– for blue or yellow flame: infrared-flicker detector type IRD 1010 or as an alternative the UV solid state flame sensor UVD 970.

Generally, the no flame signal is generated at light levels below 3 Lux with respect to the operating cycle of the control. According to EN 230 stray light safety level has to be established in conjunction with the accompanying burner. Connecting the IRD 1010 or UVD 970 the correct wiring has to be observed.

2.1 Stray light monitoring

The stray light check is performed at the end of the pre-purge time for thr duration as mentioned in the technical datas.

3. Lock out and reset

The unit can be reset or brought into lock out mode in two different ways:

Internal
In the lock out case the unit can be reset by pushing the built-in button meaning a new start-up cycle is performed.

External
Instead of using the built-in lock out button the same function can be achieved by using an external button which connects terminal 9 with A (see also circuit and block diagram).

If the pushputton (internal or external) is pressed during normal operation or during the start sequence for more then 3 sec. and afterwards released, the control box will perform a shutdown.



Please note
The unit can only be brought to lockout mode or be reseted if power is applied to the unit.

4. Low-voltage protection

The mains voltage has to be more than 187 V_{eff} in order to allow the unit to perform a start-up.
The mains voltage is not only monitored in the start-up phase but also permanently during operation. If the voltage drops below < 160 V_{eff} during start-up or run time the control box goes into lock out mode. If the voltage rises again, the control box performs automatically a start-up as soon as the mains voltage is > 187 V_{eff}.

5. Safety

The design and control sequence of the DKO 970/972 controls will comply with the currently applicable standards and regulations (see also TECHNICAL DATA).

6. Mounting and electrical wiring

Wiring base:
- 3 earth terminals with additional terminal for burner earthing
- 3 neutral terminals with internal permanent connection to neutral terminal 8
- 2 independant spare terminals (S1 and S2)
- extra terminals A, B and C are standard
- 2 slide-in plates and 2 easy knock out holes (PG11 thread) plus 2 knock out holes in the base bottom faciliate the base wiring

The digital controls are ideally wiried on the new wiring bases S98, which are equipped with (terminals B and C are only for some special types of DMO or DMG) terminal A,. which is used for the remote reset / remote lockout functions.



Please note
To assist trouble-free operation the main neutral connection terminal in the wiring base must be fully tightened. The terminal screws are already in the undone position. To connect a wire to the terminal, the screw only needs to be fastened.

General: The control box and detector probes should not be subjected to excessive vibration.




INSTALLATION INSTRUCTIONS AND MAINTENANCE

1. Important notes

- The controls must be installed by qualified personnel only. The relevant national regulations have to be observed.
- On commissioning the wiring has to be carefully checked according the appropriate diagram, Incorrect wiring can damage the unit and endanger the installation.
- The fuse rating has to ensure that the limits specified in TECHNICAL DATA will not be exceeded. If these precautions are not observed, the effect of a short circuit can cause severe damage to the control and installation.
- For safety reasons a minimum of one control shutdown every 24 hours has to be observed.
- Disconnect the mains before the control box is plugged in or out.
- The control box is a safety device and must not be opened!

2. Function control

For safety reasons the flame detection system should be tested on commissioning the installation as well as after a service or longer shut-down.

a) Start-up with covered flame detector
   - After lock out safety time is over the unit has to go into lock out mode!

b} Start-up with exposed flame detector
   - After 12 sec prepurge time the unit has to go into lock out mode!

c) Normal start-up with burner in the normal position, cover up the flame detector
   - After start-up, and end of lock out safety time the unit has to go into lock out mode!

3. Fault finding

The built-in information system facilitate the trouble shooting in the case of problems occurring during start-up or during operation.
A list of possible lock out messages can be found in APPLICATION FEATURES chapter 1.2.

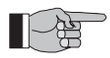

Please note:
The control box is locked in lock out mode and the reasen for the lock out is displayed until the control box is reset, either by en internal or external reset (see also subject “3. Lock out and reset").

Removing the control box from its wiring base or by interrupting the supply line may **not** reset a lock out (according to EN 230). There fore, by applying power, the fan motor switches on for 2-3 secs. before the control box goes to lock out again and the cause of the last lock out.

Error	Possible fault
Burner not working	- Thermostat circuit open - Faulty electrical wiring - Oil preheater defective - mains voltage < 187 V
Fan motor starts for a short period of time, control box goes to louk out	- Control box has not been reset
Burner starts, flame not established, lock out	- Stray light on flame detector - No ignition or no fuel
Burner starts, flame established, after safety time, lock out	- Dirty or faulty flame detector - Insufficient light on detector - Sensitivity adjustment too low on IRD

DKO 970/972

CIRCUIT AND TIMING DIAGRAM DKO 970

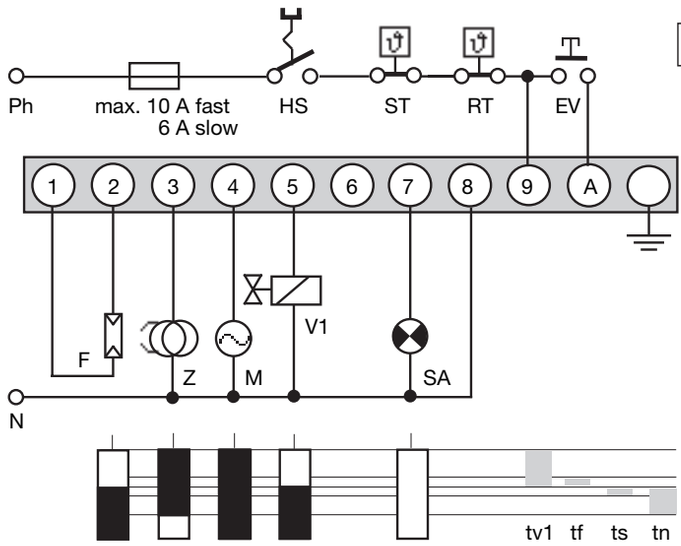

IRD-/UVD-CONNECTION

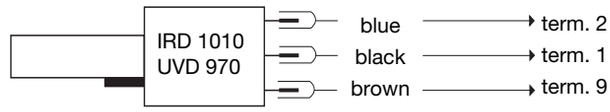

HS	Mains switch
ST	Limit thermostat
RT	Control thermostat
EV	External reset and lock out button
F	Flame detector MZ 770 S (IRD 1010, UVD 970 see separate diagram)
Z	Ignition
M	Burner motor
V1	Oil solenoid valve, 1st-stage
SA	External lock out signal
tv1	Pre-purge and pre-ignition time
tf	stray light monitoring
ts	Lock out safety time
tn	Post-ignition time

CIRCUIT AND TIMING DIAGRAM DKO 972

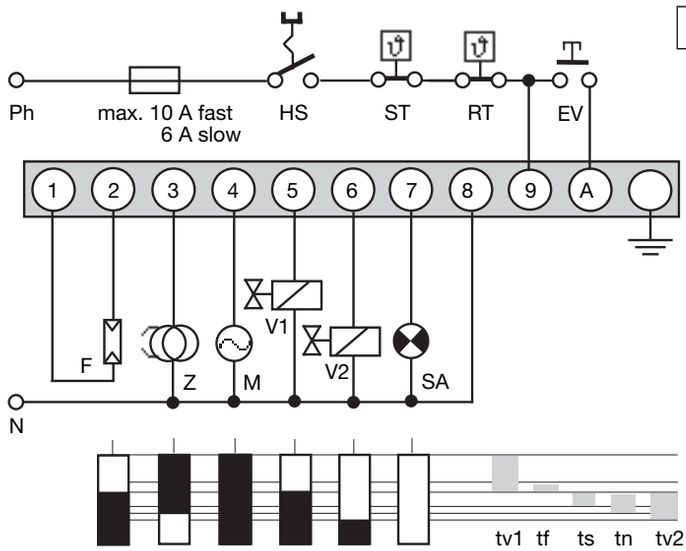

IRD-/UVD-CONNECTION

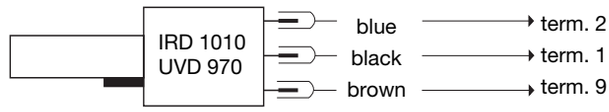

HS	Mains switch
ST	Limit thermostat
RT	Control thermostat
EV	External reset and lock out button
F	Flame detector MZ 770 S (IRD 1010, UVD 970 see separate diagram)
Z	Ignition
M	Burner motor
V1	Oil solenoid valve, 1st-stage
V2	Oil solenoid valve, 2st-stage
SA	External lock out signal
tv1	Pre-purge and pre-ignition time
tf	stray light monitoring
ts	Lock out safety time
tn	Post-ignition time
tv2	Delay time to oil V2

BLOCK DIAGRAM DKO 970/972

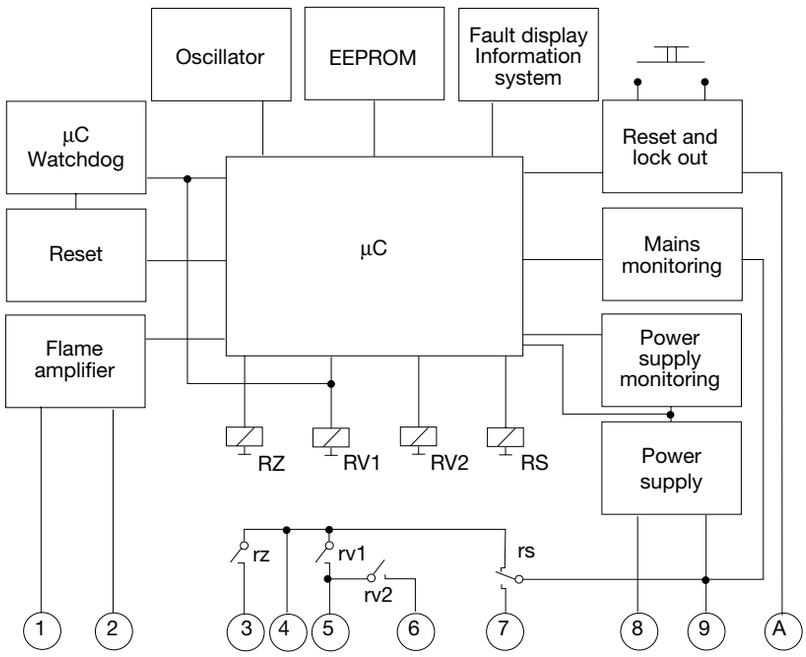

DKO 970/972

DKO 970/972 AND SOCKET

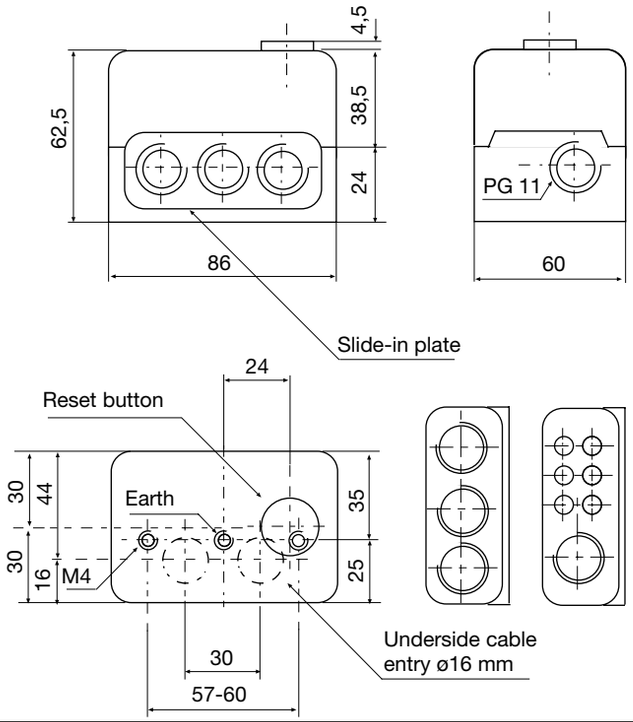

HOLDER FOR MZ 770 S

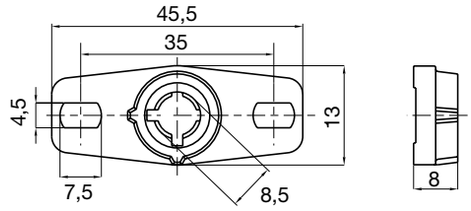

SHAFT MZ 770 S

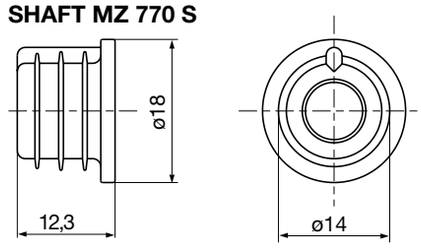

PHOTORESISTOR MZ 770 S

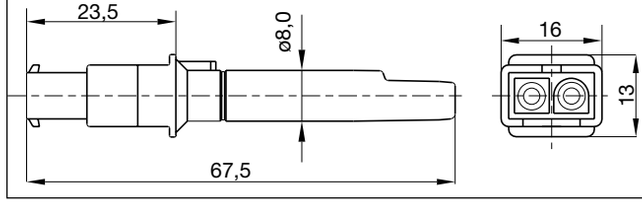

UVD 970

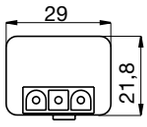

IRD 1010

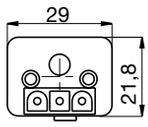

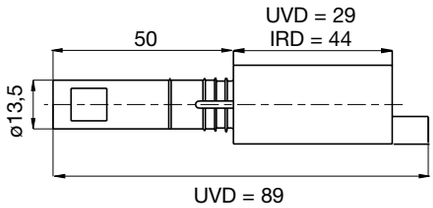

HOLDER M74 FOR IRD OR UVD

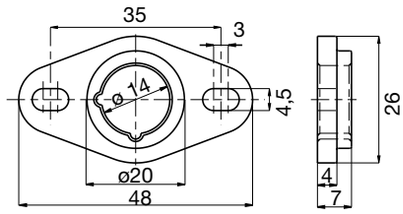

VARIATION IRD

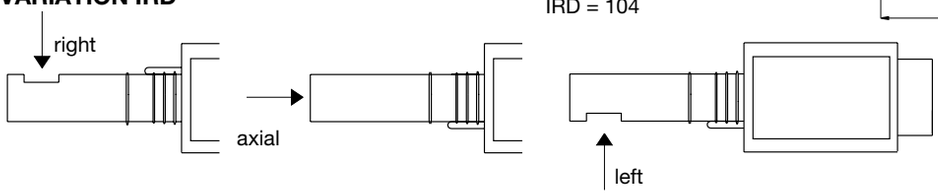

ORDERING INFORMATION

ITEM	DESIGNATION	ITEM NO.
Control box	DKO 970 Mod. 05	0310005
or	DKO 972 Mod. 05	0312005
Socket	Wiring base S98	75310
Insert plate	PG-Plate	70502
optional	Cable entry plate	70501
Flame detector	MZ 770 S	50001
optional	MZ 770 S with shaft	51001
optional	IRD 1010 right	16501
	IRD 1010 end-on	16502
	IRD 1010 left	16503
optional	UVD 970	16702
Support for flame detector	Holder for MZ 770 S	59101
optional	Holder M 74 for IRD or UVD	59074
Connection cable	Plug type, 3 core cable, 0.6 m with tag wire ends	7236001
Connection cable	Plug type, 2 core cable, 0.5 m with tag wire ends	7225001

The above ordering information refers to the standard version.
Special versions are also included in our product range.

Specifications subject to change without notice

Satronic AG
Brüelstrasse 7
Postfach 324
CH-8157 Dielsdorf

certified Qualitysystem
ISO 9001 / EN 29001
Reg. Nr. 10529

satronic
A Honeywell Company

DKO 974/976
DKO 974 N/976 N

Oil Burner Safety Control

For 1- or 2-stage oil burners up to 30 kg/h throughput and intermittent operations with or without oil preheating

Flame detection:
- **Photoresistor MZ 770 S**
- **Infrared-flicker detector IRD 1010**
- **UV flame sensor sensor UVD 970**

INTRODUCTION

The DKO 974/976 oil burner safety control boxes are suitable for oil burners with or without preheater with throughputs up to 30 kg/h. They will be approved and certified according to the applicable European standards and regulations.
The microprocessor- based programming sequence ensures extremely stable timings independent of voltage variations, ambient temperature and/or switch-on cycles. The built-in information system not only provides a continuous monitoring of the actual state of the box (very helpful especially for monitoring the start-up phase) but also informs about the cause of a possible lock out. The lock out cause is stored in such a way that it can be retrieved even after a power failure.
The control box is designed for maximum safety in case of fluctuations in the voltage supply. If the mains voltage drops below the permitted level, operation is interrupted and the control box automatically prevents the start sequence from being repeated. In this way, the safety of the system is not put at risk by a drop in the mains voltage. This low-voltage protection works not only during start-up but also permanently during operation.

TYPES AVAILABLE

DKO 974	1-stage operation with release thermostat
DKO 976	2-stage operation with release thermostat
DKO 974N	1-stage operation without release thermostat
DKO 976N	2-stage operation without release thermostat

CONSTRUCTIONAL FEATURES

The control box circuitry is protected by a flame resistant, transparent plug-in type plastic housing. A central fixing screw locks the control box to the wiring base. The plug-in control box incorporates the microprocessor based timer, flame check and reset circuits. Manual reset from lock out and set to lock out is provided by a push button with an integrated lock out signal lamp. The wiring base S98 is equipped with spare- and extraterminals and allows together with a variety of cable entry points utmost flexibility of electrical wiring.
The DKO 974 is compatible with the TF 834, TF 834.2. The DKO 976 is in addition compatible with the TF 804, TF 804.2, TF 836, TF 836.2.

Using the DKO 976 as a replacement for the TF 804 or TF 804.2, the flame sensor FZ 711 S must be replaced by its compatible type MZ 770 S.



TECHNICAL DATA

Operating voltage	220 / 240 V (-15... +10%) 50 Hz (±5%)
Fuse rating	10 A fast, 6 A slow
Power consumption	ca. 15 VA
Max. load per output	
- term. 3 ignition trafo	1.0 A, cos φ 0.2
- term. 4 motor	2.0 A, cos φ 0.4
- term. 5 + B solenoid valves	0.5 A, cos φ 0.4
- term. 6 oil preheater	2.0 A, cos φ 1.0
- term. 7 alarm indicator	0.5 A, cos φ 0.4
total load	4.0 A, cos φ 0.4 max. 6 A during 0.5 sec
Reset time from lock out	none
Flame detectors	< 3 m length of cable
MZ 770 S	side-on and end-on viewing
Light sensitivity	better 6 Lux
IRD 1010	side-on or end-on viewing
UVD 970	end-on viewing
Weight incl. Wiring base	190 g
Mounting position	any
Protection class	IP 40
Approved ambient parameter for control and flame detector	max. 95% bei 30° C
- for operation	0° C... +60° C
- for storage	-20° C... +80° C
Build-up of ice, penetration of water and condensing water are	inadmissible
Approvals according to European standards	EN 230, as well as all other relevant Directives and standards

Timings (sec.)

Model	waiting time start	max. warm-up time oil preheater **ta**	Pre-purge and pre-ignition time **tv1**	Stray light monitoring **tf**	safety time **ts**	Post-ignition time after V1 **tn**	delay time to V2 DKO 976 only **tv2**
05	0	400	15	5	5	7	20

0650.11-01-e/01/99

APPLICATION FEATURES

1. Information system

The information system is microprocessor based and reports on all aspects of burner control box operation and flame supervision. It informs continuously about the actual programming sequence the unit is just performing. Besides monitoring of the programming sequence it also allows to identify errors during start-up of operation without any additional testing devices. The automatically performed diagnoses is a valuable tool which facilitates service/ maintenance work and therefore saves costs. The analyses of the error cause can be done directly on stage or if not possible afterwards as the lock out reason is stored in a non-volatile lock out mode memory.
The information system communicates with the outside world using a LED (the used Flash-Code is similar to the Morse-Code). The messages are optically transmitted by flashing appropriately a LED. Using an (optional) additional terminal the messages can be recorded and displayed in easy readable form.

1.1 Programming sequence display

The built-in microprocessor controls not only the programming sequence but the information system too. The individual phases of the programming sequence are displayed as Flash-Code.
The following messages can be distinguished:

Message	Flash-Code
waiting for control thermostat	▮ ▮ .
pre-ignition tv1	▮ ▮ ▮ ▮ .
safety time ts post ignition tn	▮ ▮ ▮ .
delay 2nd stage tv2	▮ ▮ ▮ ▮ .
running	▮ _
low mains voltage	▮ ▮ ▮ _

Description
▮ = short pulse
▮ = long pulse
. = short pause
_ = long pause

1.2 Lock-out diagnoses

In case of a failure the LED is permanently illuminated. Every 10 seconds the illumination is interrup-ted by a flash code, which indicates the cause of the error. Therefore the following sequence is performed which is repeated as long as the unit is not reset.

Sequence:

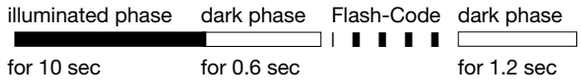

Error diagnosis

Error message	Flash-Code	Possible fault
lock out	▮ ▮ ▮ ▮ ▮	within lock out safety time no flame establishment
stray light	▮ ▮ ▮ ▮ ▮	stray light during monitored phase, detector may be faulty
limit thermostat time-out	▮ ▮ ▮ ▮ ▮	contact of limit thermostat does not close within 400 sec.

Flash-Code for manual lock out	
manual/external lock out (see also 4. lock out and reset)	▮ ▮ ▮ ▮ ▮ _ ▮ ▮ ▮ ▮ ▮ ▮

2. Flame control

The following detectors can be used for flame supervision:
– for yellow oil flame: photoresistor MZ 770 S
– for blue or yellow flame: infrared-flicker detector type IRD 1010 or as an alternative the UV solide state flame sensor UVD 970
Generally, the no flame signal is generated at light levels below 3 Lux with respect to the operating cycle of the control. According to EN 230 stray light safety level has to be established in conjunction with the accompanying burner. Connecting the IRD 1010 or UVD 970, the correct wiring has to be observed.

2.1 Stray light monitoring

The stray light check is performed at the end of the pre-purge time for thr duration as mentioned in the technical datas.

3. Burner control

With oil preheater
The fuel heater of the burner has to have a temperature control switch. The closing contact-switch of the heater has to be connected between terminals 4 and 6. A special contact in the control unit connects the thermo-switch of the heater as soon as the burner is operating and a photocurrent is generated. Therefore an interruption of the burner operation due to a decrease in oil temperature is prevented (e.g. in case of high oil flow).
According to EN 230 A 2.1, the short circuiting of the thermoswitch is allowed only for an oil flow of max. 10 kg/h oil. Burners with a higher throughput have to shut down if the oil temperature gets below the allowed minimum. In such a case the thermo-switch has to be put in the phase-circuit and terminals 4 and 6 have to be connected with a link.
The contact of the release thermostat of the oil preheater is monitored. If the contact does not close within the predefined time (400 sec), the programmer goes into lock out mode.
Therefore excessive oil temperatures in the preheater over long periods can be prevented avoiding cracking of the oil and oulsequent blocking of the preheater or nozzle.

Without oil preheater
In such a case the terminals 4 and 6 have to be connected with a link.



Attention
The switch of the release thermostat for the oil preheater must never be linked between 4 and 6 or 6 and 9!
During lockout, the preheater will not be separeted from power. This could lead to a defective pre-heater due to burn out its heating winding.

4. Lock out and reset

The unit can be reset or brought into lock out mode in two different ways:

Internal
In the lock out case the unit can be reset by pushing the built-in button meaning a new start-up cycle is performed.

External
Instead of using the built-in lock out button the same function can be achieved by using an external button which connects terminal 9 with A (see also circuit and block diagram).

If the pushputton (internal or external) is pressed during normal operation or during the start sequence for more then 3 sec. and afterwards released, the control box will perform a shutdown.

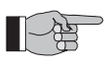

Please note
The unit can only be brought to lockout mode or be reseted if power is applied to the unit.

5. Low-voltage protection

The mains voltage has to be more than 187 V_{eff} in order to allow the unit to perform a start-up.
The mains voltage is not only monitored in the start-up phase but also permanently during operation. If the voltage drops below < 160 V_{eff} during start-up or run time the control box goes into lock out mode. If the voltage rises again, the control box performs automatically a start-up as soon as the mains voltage is > 187 V_{eff}.

6. Safety

The design and control sequence of the DKO 974/976 controls will comply with the currently applicable standards and regulations (see also TECHNICAL DATA).

7. Mounting and electrical wiring

Wiring base:
- 3 earth terminals with additional terminal for burner earthing
- 3 neutral terminals with internal permanent connection to neutral terminal 8
- 2 independant spare terminals (S1 and S2)
- extra terminals A, B and C are standard
- 2 slide-in plates and 2 easy knock out holes (PG11 thread) plus 2 knock out holes in the base bottom faciliate the base wiring

The digital controls are ideally wiried on the new wiring bases S98, which are equipped with (terminals B and C are only for some special types of DMO or DMG) terminal A,. which is used for the remote reset / remote lockout functions.



Please note
To assist trouble-free operation the main neutral connection terminal in the wiring base must be fully tightened. The terminal screws are already in the undone position. To connect a wire to the terminal, the screw only needs to be fastened.

General: The control box and detector probes should not be subjected to excessive vibration.

INSTALLATION INSTRUCTIONS AND MAINTENANCE

1. Important notes

- The controls must be installed by qualified personnel only. The relevant national regulations have to be observed.
- On commissioning the wiring has to be carefully check-ed according the appropriate diagram, Incorrect wiring can damage the unit and endanger the installation.
- The fuse rating has to ensure that the limits specified in TECHNICAL DATA will not be exceeded. If these precautions are not observed, the effect of a short circuit can cause severe damage to the control and installation.
- For safety reasons a minimum of one control shutdown per 24 hours has to be observed.
- Disconnect the mains before the control box is plugged in or out.
- The control box is a safety device and must not be opened!

2. Function control

For safety reasons the flame detection system should be tested on commissioning the installation as well as after a service or longer shut-down.

a) Start-up with covered flame detector
   – After lock out safety time is over the unit has to go into lock out mode!

b) Start-up with exposed flame detector
   – After 12 sec prepurge time the unit has to go into lock out mode!

c) Normal start-up with burner in the normal position, cover up the flame detector
   – After start-up, and end of lock out safety time the unit has to go into lock out mode!

3. Fault finding

The built-in information system facilitates the trouble shooting in the case of problems occurring during start-up or during operation.
A list of possible lock out messages can be found in APPLICATION FEATURES chapter 1.2.



Please note:
The control box is locked in lock out mode and the reasen for the lock out is displayed until the control box is reset, either by en internal or external reset (see also subject “3. Lock out and reset").

Removing the control box from its wiring base or by interrupting the supply line may not reset a lock out (according to EN 230). There fore, by applying power, the fan motor/ nozzle preheater switches on for 2-3 secs. before the control box goes to lock out again and the cause of the last lock out.

Error	Possible fault
Burner not working	- Thermostat circuit open - Faulty electrical wiring - Oil preheater defective - mains voltage < 187 V
Fan motor/nozzle preheater starts for a short period of time, control box goes to louk out	- Control box has not been reset
Burner starts, flame not established, lock out	- Stray light on flame detector - No ignition or no fuel
Burner starts, flame established, after safety time, lock out	- Dirty or faulty flame detector - Insufficient light on detector - Sensitivity adjustment too low on IRD

CIRCUIT AND TIMING DIAGRAM DKO 974

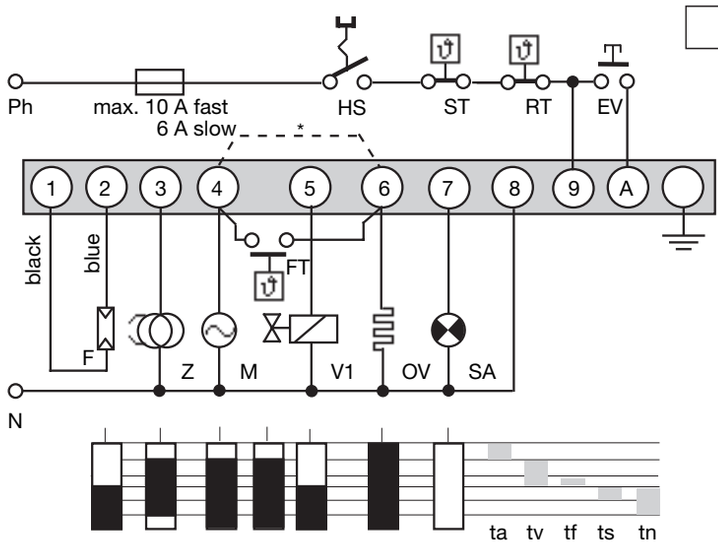

IRD-/UVD-CONNECTION

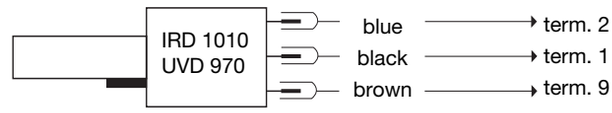

HS	Mains switch
ST	Limit thermostat
RT	Control thermostat
EV	External reset and lock out button
F	Flame detector MZ 770 S (IRD 1010/UVD 970 see ssparate diagram)
Z	Ignition
M	Burner motor
FT	Release thermostat oil preheater
*	For burners without fuel heaters term. 4 and 6 have to be connected with a link
V1	Oil solenoid valve
OV	Oil preheater
SA	External lock out signal
ta	Pre-heat-time oil preheater
tv	Pre-purge and pre-ignition time
tf	stray light monitoring
ts	Lock out safety time
tn	Post-ignition time

CIRCUIT AND TIMING DIAGRAM DKO 976

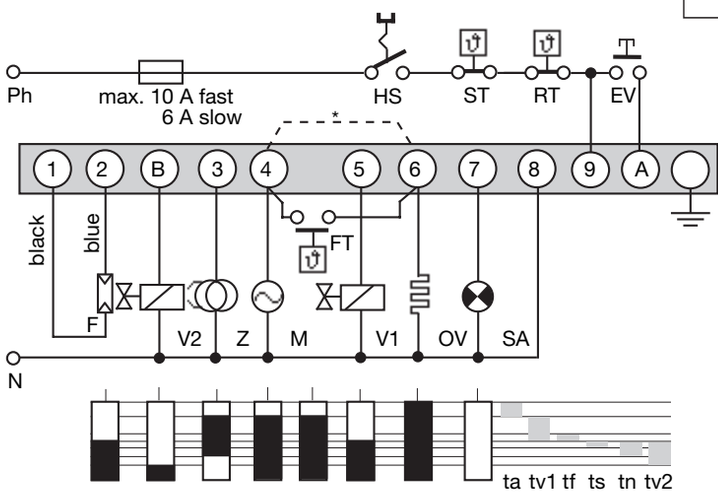

IRD-/UVD-CONNECTION

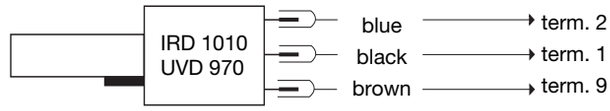

HS	Mains switch
ST	Limit thermostat
RT	Control thermostat
EV	External reset and lock out button
F	Flame detector MZ 770 S (IRD 1010/UVD 970 see separate diagram)
Z	Ignition
M	Burner motor
V1, V2	Solenoid valves
OV	Oil preheater
FT	Release thermostat oil preheater
*	With burners without fuel heaters term. 4 and 6 have to be connected with a link
SA	External lock out signal
ta	Pre-heat-time oil preheater
tv1	Pre-purge and pre-ignition time
tf	stray light monitoring
ts	Lock out safety time
tn	Post-ignition time
tv2	Delay time to oil V2

BLOCK DIAGRAM DKO 974/976

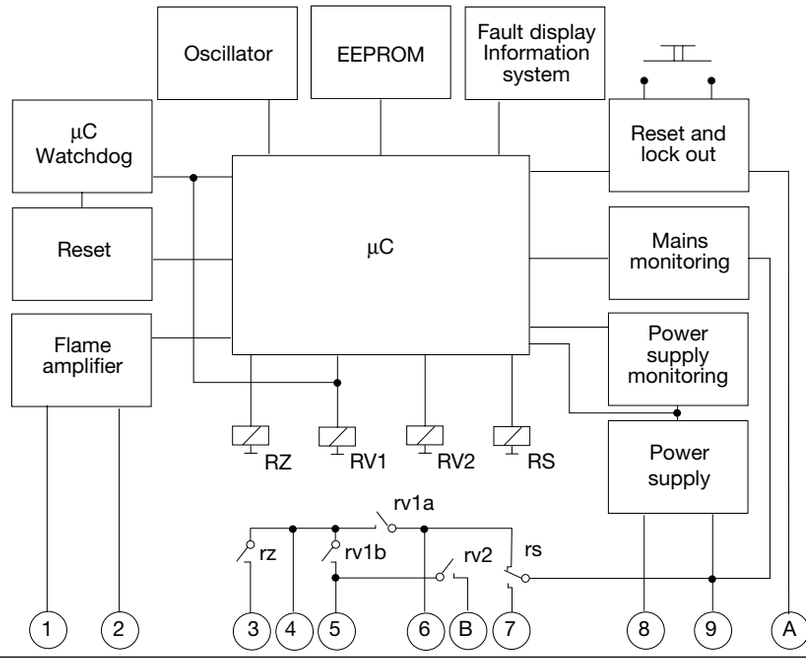

BLOCK DIAGRAM DKO 974/976

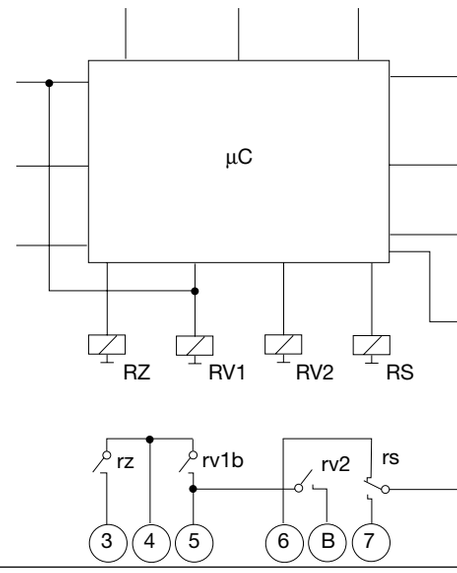

DKO 974/976 AND SOCKET

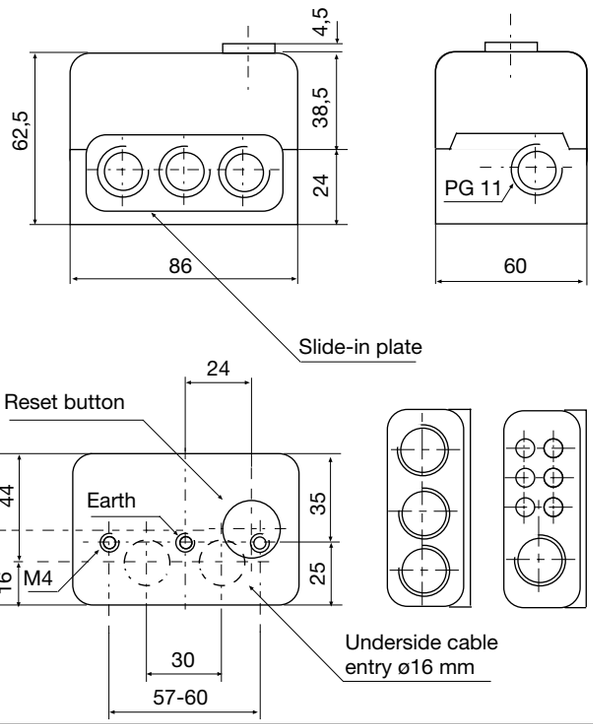

HOLDER FOR MZ 770 S

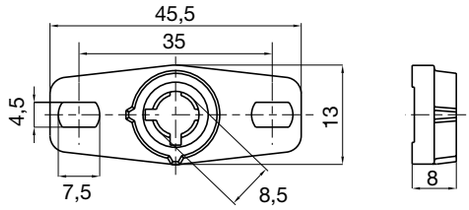

SHAFT MZ 770 S

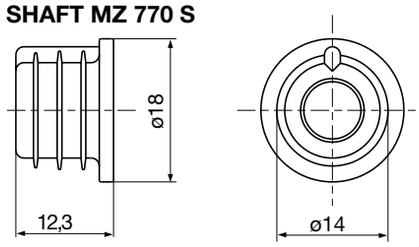

PHOTORESISTOR MZ 770 S

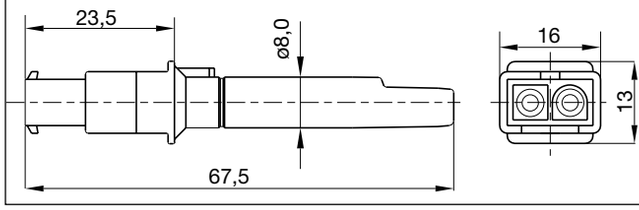

UVD 970

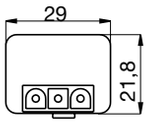

IRD 1010

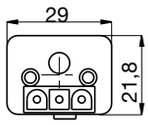

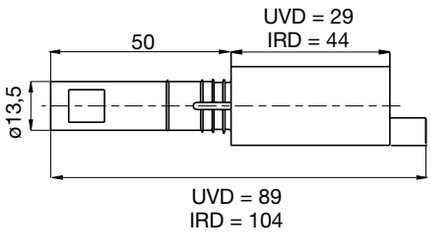

HOLDER M74 FOR IRD OR UVD

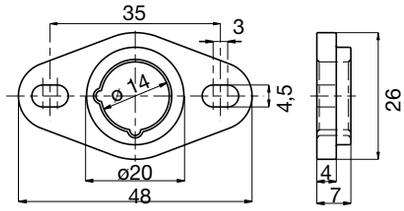

VARIATION IRD

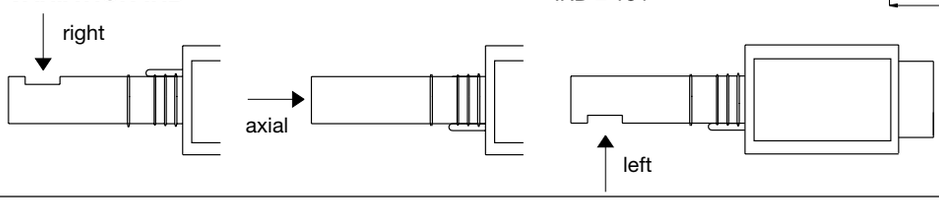

ORDERING INFORMATION

ITEM	DESIGNATION	ITEM NO.
Control box	DKO 974 Mod. 05	0314005
or	DKO 976 Mod. 05	0316005
or	DKO 974 N Mod. 05	0314705
or	DKO 976 N Mod. 05	0316705
Socket	Wiring base S98	75310
Insert plate	PG-Plate	70502
optional	Cable entry plate	70501
Flame detector	MZ 770 S	50001
optional	MZ 770 S with shaft	51001
optional	IRD 1010 right	16501
	IRD 1010 end-on	16502
	IRD 1010 left	16503
optional	UVD 970	16702
Support for flame detector	Holder for MZ 770 S	59101
optional	Holder M 74 for IRD or UVD	59074
Connection cable	Plug type, 3 core cable, 0.6 m with tag wire ends	7236001
Connection cable	Plug type, 2 core cable, 0.5 m with tag wire ends	7225001

The above ordering information refers to the standard version.
Special versions are also included in our product range. Specifications subject to change without noticSocket

DKO 974/976
DKO 974 N/976 N

satronic
A Honeywell Company

Satronic AG
Brüelstrasse 7
Postfach 324
CH-8157 Dielsdorf

Oil burner safety control

For burners on hot-air heaters, as well as burners above 30 kg/h in intermittent operation, 1- or 2-stage.
Flame detectors:
- Photoresistor MZ 770 S
- Flicker detector IRD 911 / 1010



INTRDUCTION

The oil burner automatic safety control TTO 872, resp., TTO 876 controls and monitors burners on hot air heaters, as well as burners with an oil consumption of over 30 kg/h (approved and certifcated acc. to DIN 4787).

If the infrared flicker detector IRD 911 or 1010 is utilized as flame monitor, even red hot combustion chamber walls cannot affect the safe operation, since this sensor exclusively responds to the flame.

The oil burner automatic safety control TTO 876 is fully interchangeable with the type TTO 836. The automatic control TTO 872 is – with the exception of the flame detector – compatible with type TTO 810. When replacing type TTO 810, the photo-cell FZ 711 has also got to be replaced by an MZ 770 S.

The different heights are compensated for by mounting the pushbutton extension (art. No. 70601).

Instead of the pushbutton extension, it is also possible to mount the remote reset device FR 870 (art. No. 70700, refer to the documentation "Remote Reset device FR 870").

The oil burner control boxes TTO 872.2 / 876.2 are equipped with a low-voltage protection according to DIN-EN 230.

TYPES AVAILABLE

TTO 872.2	without connecting terminal for oil pre-heater
TTO 876.2	with bridging contact and connection for oil pre-heater.

CONSTRUCTIONAL FEATURES

The automatic control is housed in a non-inflammable, transparent, plug-in type plastic case and contains the thermo-mechanical and electronic combined time element, the flame monitor part and the reset device.

On the top of the unit there are the illuminated pushbutton for indication of malfunctions and reset, as well as the screw for central mounting.

The base can be equipped with additional loop terminals and - together with the various possibilities for cable entry - enables a universal wiring.

TECHNICAL DATA

Operating voltage	220 / 240 V (-15... +10%) 50 Hz (40 - 60 Hz)
Rating fuse	max. 10 A rapid, 6 A slow
Power consumption	approx. 5 VA
Max. load per output valve outputs total	4 A ohmic (resistive) 2 A ohmic (resistive) 6 A ohmic (resistive)
Pre-purge time	20 sec
Pre-ignition time	20 sec
Post-ignition time	2 - 4 sec
Delay time valve 2	approx. 40 sec
Ignition safety time	5 sec max.
Waiting period after shut-down due to malfunction	approx. 60 sec
Flame detector MZ 770 S IRD 911 / 1010	 for side-on and end-on viewing for side-on and end-on viewing
Light sensitivity MZ 770 S	better than 8 Lux
Detector current during operation	min. 48 µA
Connection to flame detector MZ 770 S IRD 911 / 1010	 2 m cable length maximum up to 100 m cable length
Weight, incl. base	0.25 kg
Mounting position	Any
Insulation Standard	IP 44
Recommended ambient operating temperatur for control and flame detector	-20° C... +60° C

APPLICATION NOTES

1. Flame control

The following flame detectors can be used for flame control:
- For yellow oil flame: photoresistor MZ 710 S (side-on or end-on viewing).
- For blue or yellow oil flame: infrared-flame detector type IRD 1010.

Generally the no flamesignal is generated at light levels belw 3 Lux with respect to the operating cycle of the control. According to DIN 4787, clause 4.3.4, stray light safety level has to be established in conjunction with the accompanying burner.

By installing the IRD/TTO adaptor cable between the IRD 1010 and the detector cable in conjunction with the TTO 872 or TTO 876 control boxes, the uniform system of baseplate wiring can be adhered to.

2. Burner Control

A special contact in the unit (only TTO 876) bridges the release thermostat of the oil pre-heater as soon as the burner goes into operation and a photocurrent is present. This prevents an interruption to the operating sequence as a result of declining oil temperature (e.g., high throughput capacity). In accordance with DIN 4787, part 1, section 4.2.6, the internal bridging of the release thermostat of the oil pre-heater is only permissible up to a throughput capacity of maximum 10 kg/h of oil. Burners with higher capacities have to switch off when the required oil temperature is not reached. The release thermostat must then be installed in the phase supply line and terminal 4 bridged with 6.

3. Safety

With respect to design and programme sequence, the oil burner automatic safety controls type TTO 872 and TTO 876 comply with the currently applicable European standards and regulations for hot air heaters and burners with capacities of over 30 kg/h.

4. Mounting and Electrical Installation

Wiring base:
- 3 earth terminals with additional terminal for burner earthing.
- 3 neutral terminals with internal permanent connection to neutral terminal.
- 2 slide-in plates and 2 easy-knock out holes (PG 11 thread), plus 2 knock out holes in the base bottom facilitate the base wiring.
- For 2-stage burners, which are equipped with the TTO 876, the unit base type 701-TTG-EN (Art. No. 70101) or type 701-TTG-ENCD (Art. No. 70103) have to be used.

General:
- Mounting position optional, protection class IP 44 (water spray). Control box and flame detector should not be subjected to excessive vibration.
- When installing the control, the relevant regulations have to be observed.

COMMISSIONING AND ROUTINE CHECKS

1. Important notes

- On commissioning it is advisable to carefully check the wiring according to the appropriate diagram. Incorrect wiring can damage the unit and endanger the installation.
- The fuse rating has to ensure that the limits specified in Technical Data will not be exceeded. If these precautions are not observed, the effect of a short circuit can cause severe damage to the control and installation.
- For safety reasons a minimum of one control shut-down per 24 hours has to be ensured.
- Disconnect the mains before the control box is plugged in or out.
- The control box is a safety device and must not be opened.

2. Functional control

For safety reasons the flame detection system should be tested on commissioning the installation as well as after a service or a longer shut-down.

a) Start-up with covered flame detector:
   - After lock-out safety time
   -> lockout

b) Start-up with exposed flame detector:
   - After ca. 20 sec. pre-purge:
   -> lockout

c) Normal start-up; with burner in the "run" position, cover up the flame detector:
   - New start-up, after end of lock-out safety time
   -> lockout

For safety reasons, the darkening of the flame detector must only take place at the earliest after 1 minute of operation.

3. Fault finding

Burner not working:
- Faulty electrical wiring, thermostat circuit open
- Oil preheater defect

Burner starts, flame not established = lockout
- Stray light on flame detector.
- No ignition or no fuel.

Burner starts, flame established, after safety time = lockout:
- Flame detector dirty or faulty
- Insufficient light on detector
- Sensitivity adjustment too low on IRD

CIRCUIT AND TIMING DIAGRAM TTO 872.2

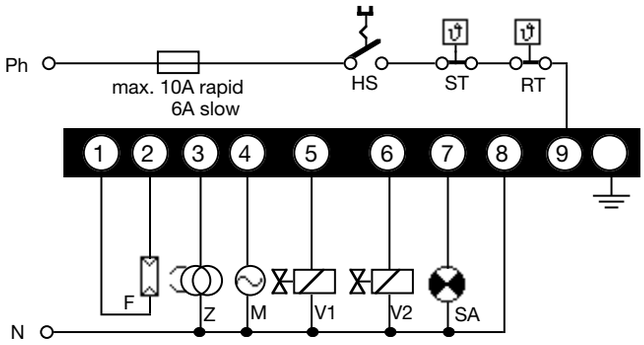

CIRCUIT AND TIMING DIAGRAM TTO 872.2

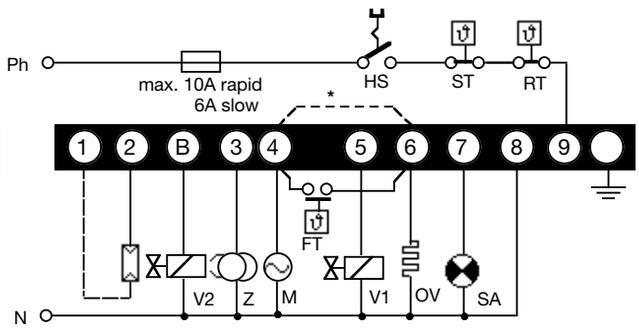

IRD-SUPPLY

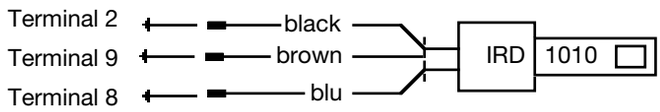

HS Main switch
ST Safety thermostat
RT Controlling thermostat
F Flame detector MZ 770 S (IRD 1010 in accordance with separate connection diagram)
Z Ignition
M Burner motor
V1 Solenoid valve 1st stage
V2 Solenoid valve 2nd stage
FT Release thermostat oil preheater
OV Oil pre-heater
SA External indication of malfunction

SCHEMATIC DIAGRAM TTO 872.2

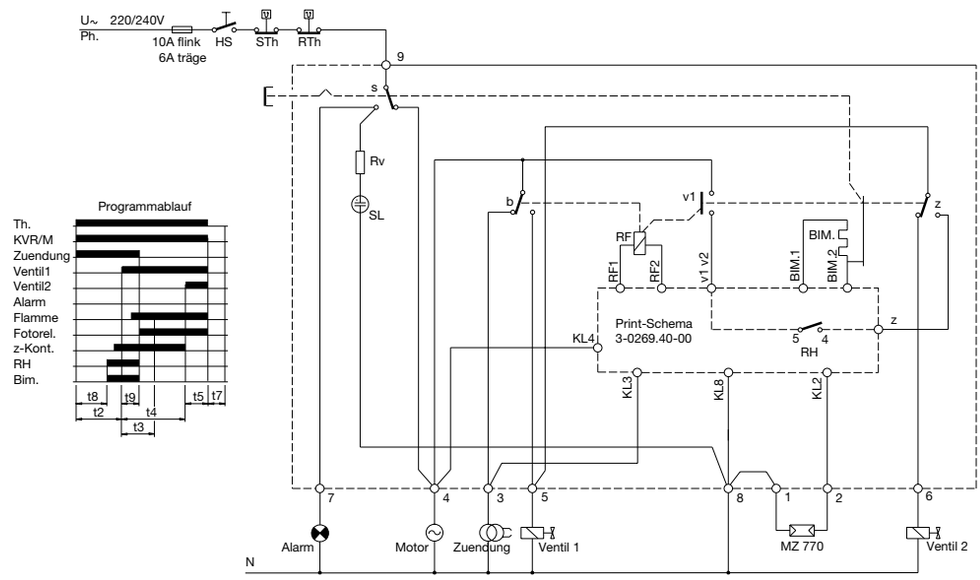

SCHEMATIC DIAGRAM TTO 876.2

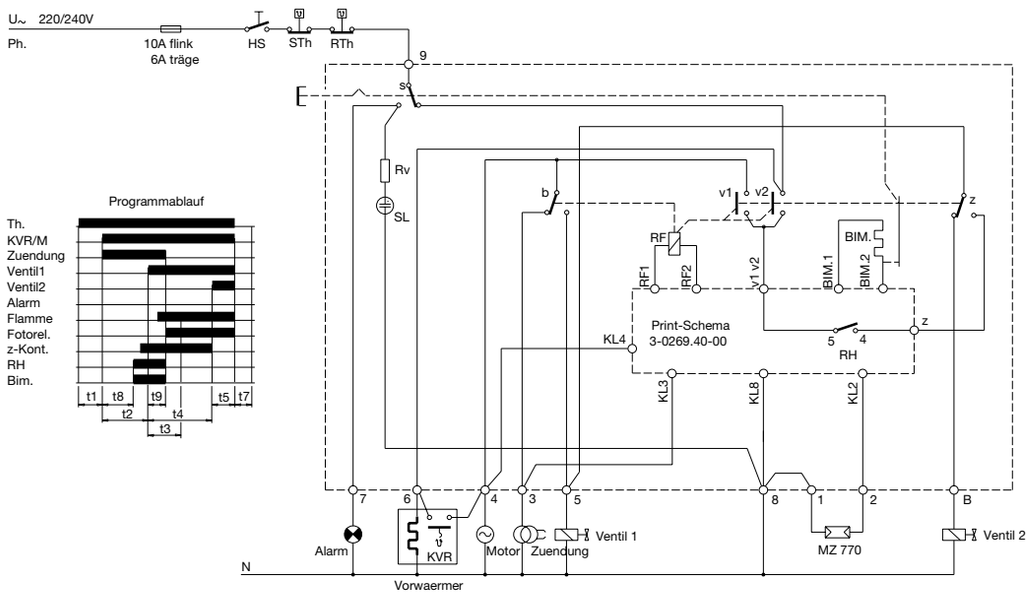

TTO 872 / 876 WITH BASE

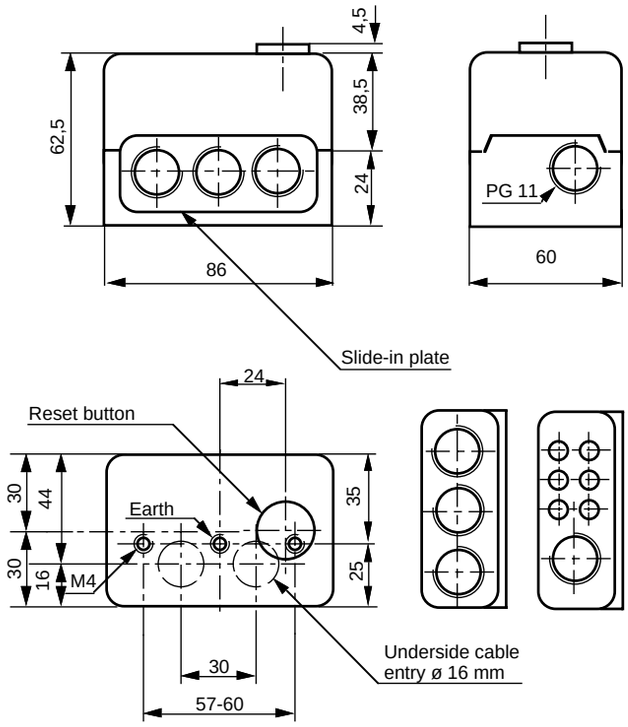

SUPPORT FOR MZ 770 S

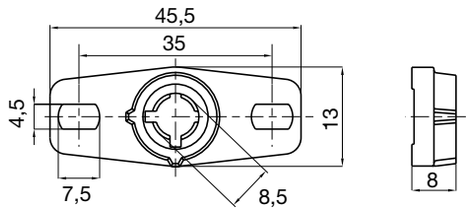

PLUG-IN SHAFT MZ 770 S

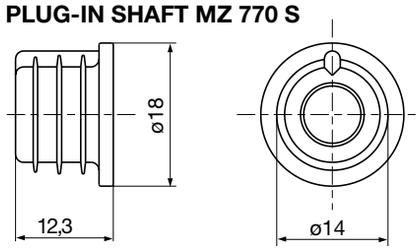

PHOTORESISTOR MZ 770 S

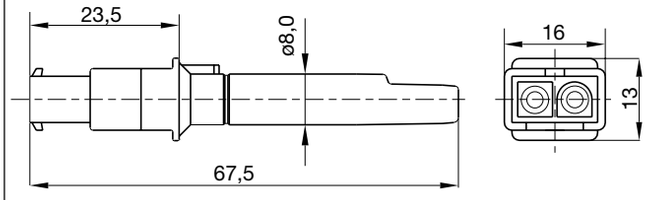

IRD 1010

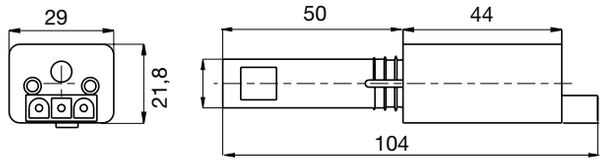

IRD 911

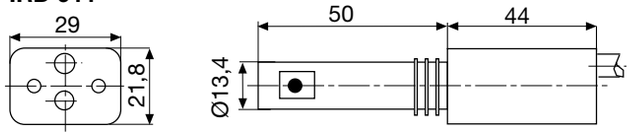

VARIATION

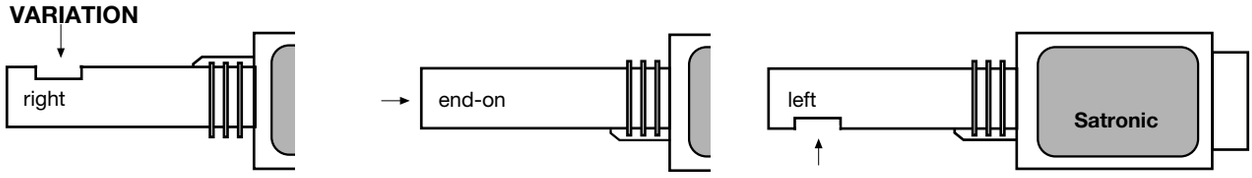

ORDERING INFORMATION

ITEM	DESIGNATION	ITEM NO.
Control unit	Type TTO 872.2	02811
or	Type TTO 876.2	02801
Socket	Socket 701 ABEN	70001
Socket for TTO 876, 2-stage	Socket 701 TTG-EN	70101
Insert plate	PG-plate	70502
optionally	Cable entry plate	70501
Flame detector	MZ 770 S	50001
optional	MZ 770 S mounted with plug-in shaft	51001
optional	IRD 1010 right	16501
	IRD 1010 end-on	16502
	IRD 1010 left	16503
Support for flame detector	Holder for MZ	59101
optional	FZ Holder M 74	59074
Connection cable IRD	Plug-type, 3 core cable, 0.6 m, with tag wire ends	7236001
Connection cable MZ	Plug-type, 2 core cable, 0.5 m, with tag wire ends	7225001

The above ordering information refers to the standard version.
Special versions are also included in our product range.

Specifications subject to change without notice.

Satronic AG
Brüelstrasse 7
Postfach 324
CH-8157 Dielsdorf

Oil burner safety control

For burners on hot-air heaters, as well as burners above 30 kg/h in intermittent operation, 1- or 2-stage, direct lockout
Flame detectors:
- Photoresistor MZ 770 S
- Flicker detector IRD 911 / 1010



INTRDUCTION

The oil burner automatic safety control MMO 872, resp., MMO 876 controls and monitors burners on hot air heaters, as well as burners with an oil consumption of over 30 kg/h (approved and certifcated acc. to EN 230).
If the infrared flicker detector IRD 911 or 1010 is utilized as flame monitor, even red hot combustion chamber walls cannot affect the safe operation, since this sensor exclusively responds to the flame.
The oil burner automatic safety control MMO 872/876 is fully interchangeable with the type TTO 872/876, but going directly to lockout (=lockout at loss of flame).
It is possible to mount the remote reset device FR 870 (art. No. 70700, refer to the documentation "Remote Reset device FR 870").
The oil burner control boxes MMO 872/876 are equipped with a low-voltage protection according to DIN-EN 230.

TYPES AVAILABLE

MMO 872	without connecting terminal for oil pre-heater
MMO 876	with bridging contact and connection for oil pre-heater.

CONSTRUCTIONAL FEATURES

The control box is enclosed in a protective, flame resistant, transparent, plug-in type plastic housing, and includes:
- Synchronous motor with reduction gearing driving cam switch
- Cam switch with informative, coloured programme indicator
- 10-way cam switch assembly controlling the programme sequence
- Electronic components on plug-in printed circuit

The following important indicators and operating controls are situated on the front of the control box:
- Reset button incorporating signal lamp for malfunction (lockout)
- Coloured programme indicator
- Central screw fastening

TECHNICAL DATA

Operating voltage	220 / 240 V (-15... +10%) 50 Hz (40 - 60 Hz)
AC frequency variations	result in proportional timing deviations
Rating fuse	max. 10 A rapid, 6 A slow
Power consumption	approx. 10 VA
Max. load per output	
- Kl. 3, ign. trafo	2 A, cos φ 0.2
- Kl. 4, fan motor	2 A, cos φ 0.4
- Kl. 5 + 6 + B, solenoid valves	1 A, cos φ 0.4
- Kl. 6, oil preheater	2 A, cos φ 1
- Kl. 7, alarm indicator	2 A, cos φ 0.4
total load	5 A, cos φ 0.4
Pre-purge time	23.5 sec
Pre-ignition time	23.5 sec
Post-ignition time	8.5 sec
Delay time valve 2	40 sec
Ignition safety time	5 sec max.
Waiting period after shut-down due to malfunction	none
Flame detector	
MZ 770 S	for side-on and end-onviewi.
IRD 911 / 1010	for side-on and end-on viewi.
Light sensitivity MZ 770 S	better than 8 Lux
Connection to flame detector	
MZ 770 S	2 m cable length maximum
IRD 911 / 1010	up to 100 m cable length
Weight, incl. base	0.35 kg
Mounting position	Any
Insulation Standard	IP 44
Recommended ambient operating temperatur for control and flame detector	-20° C... +60° C

APPLICATION NOTES

1. Flame control

The following flame detectors can be used for flame control:

- For yellow oil flame: photoresistor MZ 710 S (side-on or end-on viewing).
- For blue or yellow oil flame: infrared-flame detector type IRD 1010.

Generally the no flamesignal is generated at light levels belw 3 Lux with respect to the operating cycle of the control. According to DIN 4787, clause 4.3.4, stray light safety level has to be established in conjunction with the accompanying burner.

Commissioning with MZ 770 S: Measuring the photo-current is unreliable, as the value does not change remarkably. It is recommended to measure the DC-voltage between terminals 1/- and 2/+.

voltage during pre-purge: > 55 VDC
voltage during operation: < 25 VDC
Input impedance of the voltmeter: ≥ 10 MΩ

By installing the IRD/TTO adaptor cable between the IRD 1010 and the detector cable in conjunction with the MMO 872 or MMO 876 control boxes, the uniform system of baseplate wiring can be adhered to.

2. Burner Control

A special contact in the unit (only MMO 876) bridges the release thermostat of the oil pre-heater as soon as the burner goes into operation and a photocurrent is present. This prevents an interruption to the operating sequence as a result of declining oil temperature (e.g., high throughput capacity). In accordance with DIN 4787, part 1, section 4.2.6, the internal bridging of the release thermostat of the oil pre-heater is only permissible up to a throughput capacity of maximum 10 kg/h of oil. Burners with higher capacities have to switch off when the required oil temperature is not reached. The release thermostat must then be installed in the phase supply line and terminal 4 bridged with 6.

3. Safety

With respect to design and programme sequence, the oil burner automatic safety controls type MMO 872 and MMO 876 comply with the currently applicable European standards and regulations for hot air heaters and burners with capacities of over 30 kg/h. Features, which increase the safety above the standard:

- flame supervision with infrared-detector
- direct lockout

4. Mounting and Electrical Installation

Wiring base:

- 3 earth terminals with additional terminal for burner earthing.
- 3 neutral terminals with internal permanent connection to neutral terminal.
- 2 slide-in plates and 2 easy-knock out holes (PG 11 thread), plus 2 knock out holes in the base bottom facilitate the base wiring.
- For 2-stage burners, which are equipped with the TTO 876, the unit base type 701-TTG-EN (Art. No. 70101) or type 701-TTG-ENCD (Art. No. 70103) have to be used.

General:

- Mounting position optional, protection class IP 44 (water spray). Control box and flame detector should not be subjected to excessive vibration.
- When installing the control, the relevant regulations have to be observed.

COMMISSIONING AND ROUTINE CHECKS

1. Important notes

- On commissioning it is advisable to carefully check the wiring according to the appropriate diagram. Incorrect wiring can damage the unit and endanger the installation.
- The fuse rating has to ensure that the limits specified in Technical Data will not be exceeded. If these precautions are not observed, the effect of a short circuit can cause severe damage to the control and installation.
- For safety reasons a minimum of one control shut-down per 24 hours has to be ensured.
- Disconnect the mains before the control box is plugged in or out.
- The control box is a safety device and must not be opened.

2. Functional control

For safety reasons the flame detection system should be tested on commissioning the installation as well as after a service or a longer shut-down.

2.1 Start-up with covered flame detector:
-> lockout at the end of the safety time
2.2 Start-up with exposed flame detector:
-> lockout after start of the fan motor
2.3 Normal start-up; with burner in the "run" position, cover up the flame detector:
-> direct lockout

3. Fault finding

3.1 Burner does not operate, programme indicator remains stationary:
- Fault in electrical supply
- Thermostat OFF

3.2 Control box goes to lockout shortly after beginning pre purge (programme indicator in blue area):
- no load at terminal 5
- flame sensor faulty control box faulty
- Flame signal (stray light)

3.3 Control box goes to lockout at the end of the safety delay time (yellow area):
- IRD sensitivity setting too low
- flame sensor dirty or incorrectly installed
- flame sensor incorrectly wired or faulty
- control box faulty

3.4 No flame, lockout at the end of the safety delay time (yellow area):
- no ignition
- no fuel supply

3.5 lockout at the red area:
- flame unstable after the end of the safety time

3.6 Control box goes to lockout during normal operation (end of green area):
- Loss of flame
- Flame signal too weak

Note:
If a control box goes to lockout, it is in most cases doing its function for which it has been designed. Beside the mentioned possibilities, one of the following ones can be the reason for a burner fault:

- ignition spark at the wrong position
- oil tank empty
- oil tap closed
- oil filter stuck
- oil pump faulty

CIRCUIT AND TIMING DIAGRAM MMO 872

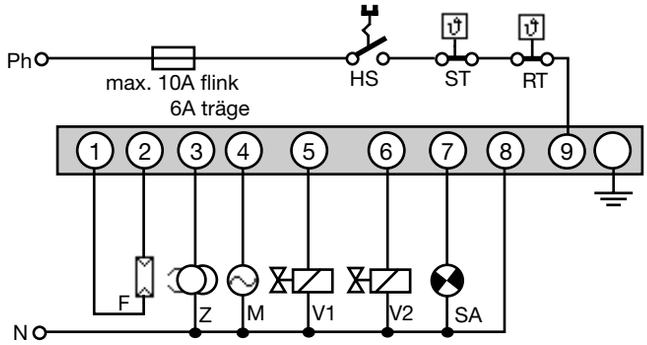

CIRCUIT AND TIMING DIAGRAM MMO 876

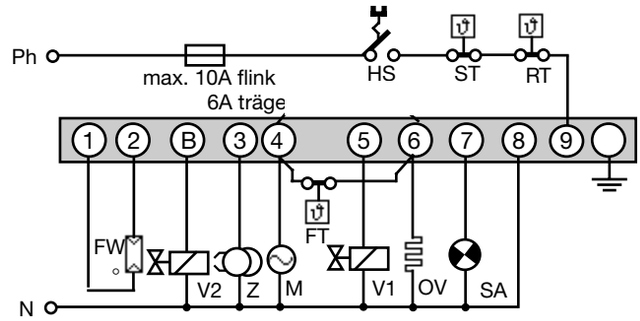

HS Main switch
ST Safety thermostat
RT Controlling thermostat
F Flame detector MZ 770 S (IRD 1010 in accordance with separate connection diagram)
Z Ignition
M Burner motor
V1 Solenoid valve 1st stage
V2 Solenoid valve 2nd stage
FT Release thermostat oil preheater
OV Oil pre-heater
SA External indication of malfunction

IRD-SUPPLY

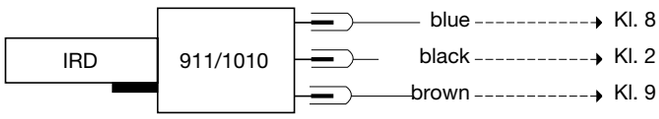

SCHEMATIC DIAGRAM MMO 872

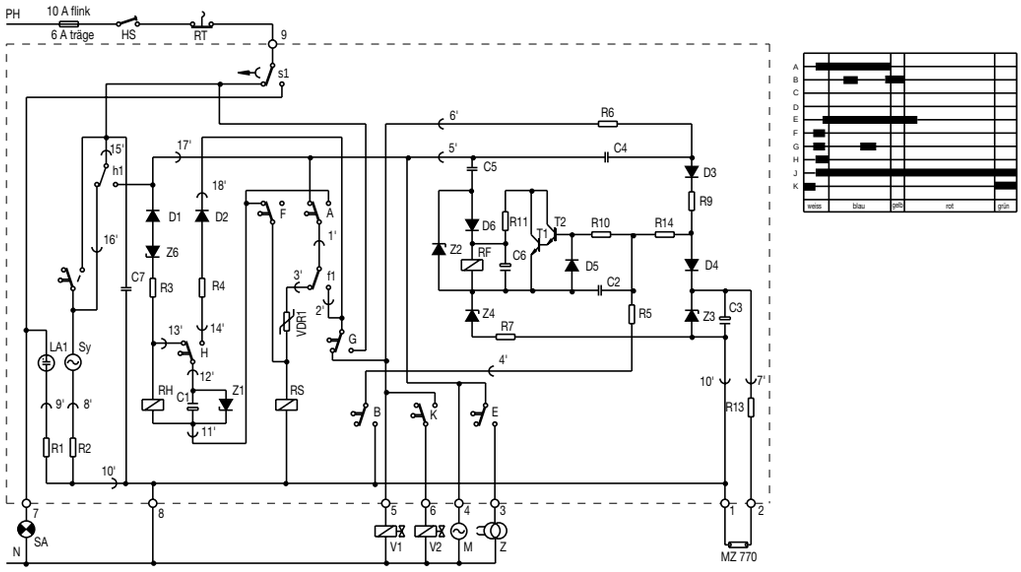

SCHEMATIC DIAGRAM MMO 876

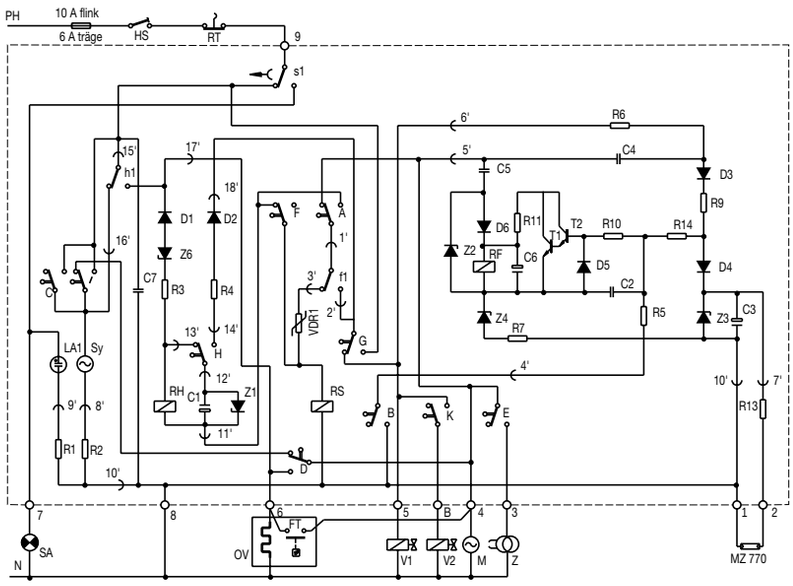

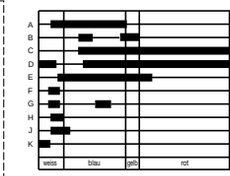

MMO 872/876

MMO 872 / 876 WITH BASE

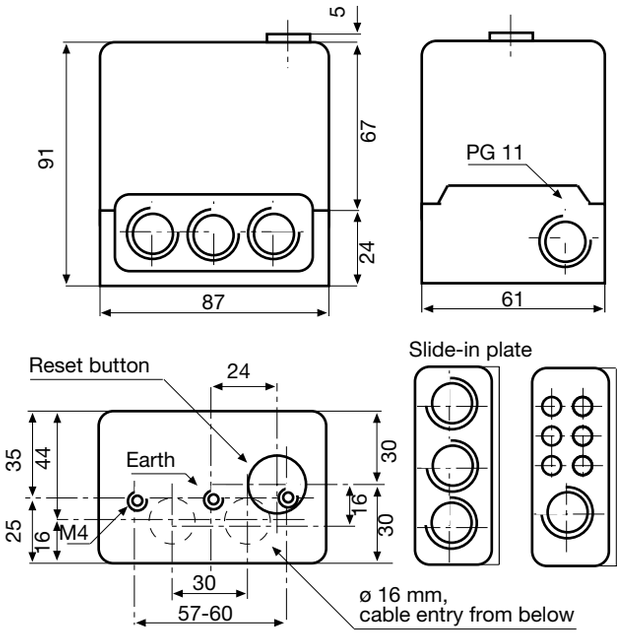

SUPPORT FOR MZ 770 S

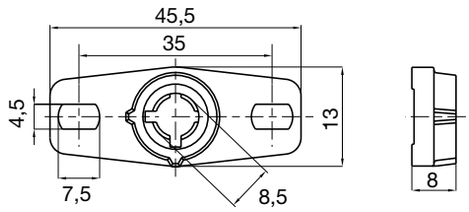

PLUG-IN SHAFT MZ 770 S

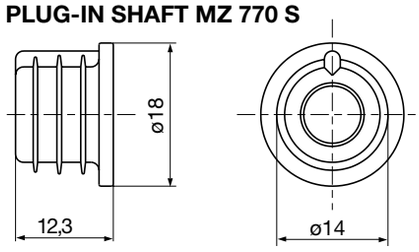

PHOTORESISTOR MZ 770 S

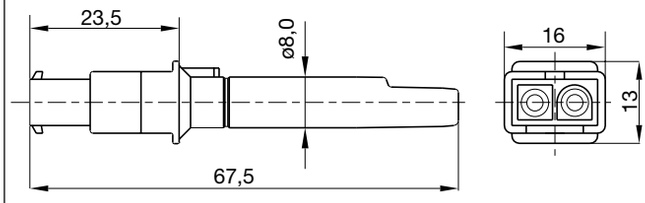

IRD 1010

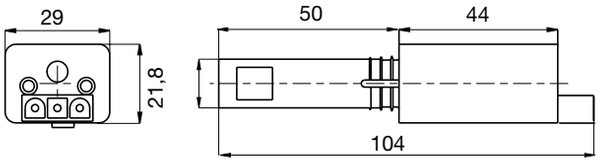

IRD 911

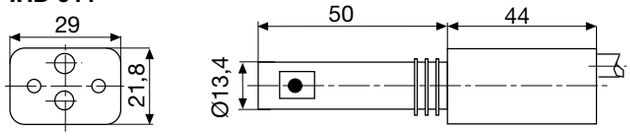

VARIATION

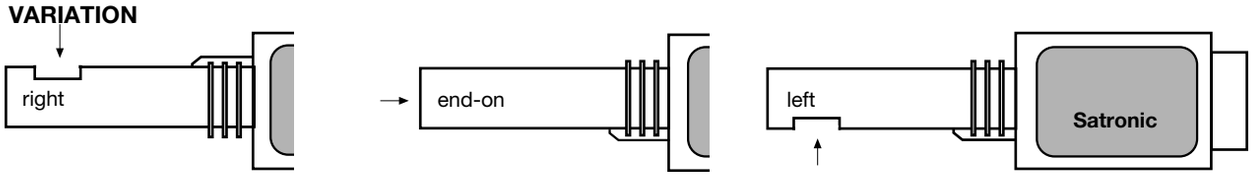

ORDERING INFORMATION

ITEM	DESIGNATION	ITEM NO.
Control unit	Type MMO 872	06610
or	Type MMO 876	06611
Socket	Socket 701 ABEN	70001
Socket for TTO 876, 2-stage	Socket 701 TTG-EN	70101
Insert plate	PG-plate	70502
optionally	Cable entry plate	70501
Flame detector	MZ 770 S	50001
optional	MZ 770 S mounted with plug-in shaft	51001
optional	IRD 1010 right	16501
	IRD 1010 end-on	16502
	IRD 1010 left	16503
Support for flame detector	Holder for MZ	59101
optional	FZ Holder M 74	59074
Connection cable IRD	Plug-type, 3 core cable, 0.6 m, with tag wire ends	7236001
Connection cable MZ	Plug-type, 2 core cable, 0.5 m, with tag wire ends	7225001

The above ordering information refers to the standard version.
Special versions are also included in our product range.

Specifications subject to change without notice.

Satronic AG
Brüelstrasse 7
Postfach 324
CH-8157 Dielsdorf

MMD 900.1

Oil burner safety control

For 2-stage oil burners with a blue flame
Flame detector: IRD 1010
QRC 1... (LANDIS+GYR)



INTRODUCTION

The MMD 900.1 oil burner control box is suitable to control and supervision of oil burners with a blue ish burning flame. For flame detection, the Infrared Flicker Detector IRD 1010 or the blue flame detector QRC 1 is recommended.

The release of valve 2 is delayed in such a way that the mixing zone of the burner is at the right temperature so that the 2nd stage can se properly added.

At flame failures shortly after the safety time, the control box goes to lockout.

CONSTRUCTIONAL FEATURES

The control box is housed in a tough transparent and self-extinguishing plastic cover. The control incorporates the following features:
- Synchronous motor driving a cam switch assembly
- cam shaft with informative coloured programme indicator
- cam assembly with 10 switches to control the program sequence
- Plug-in printed circuit boards

The following important display - and operating features are located on the front side:
- Illuminated lock-out display and reset button
- Coloured programme indicator
- Central fixing screw

TECHNICAL DATA

Supply	220 / 240 V (-15... +10%) 50 Hz (40 - 60 Hz)
Supply variations	timings will vary in proportion to supply
frequency	
fuse rating	max. 10 A rapid, 6 A slow
Power consumption	10 VA
Max. load per output	
- Kl. 3, ign. trafo	2 A, cos φ 0.2
- Kl. 4, fan motor	2 A, cos φ 0.4
- Kl. 5 + 6, solenoid valves	1 A, cos φ 0.4
- Kl. 7, alarm indicator	2 A, cos φ 0.4
total load	5 A, cos φ 0.4
Waiting time	8 secs
Pre-purge time	17 secs
Pre-ignition time	17 secs
Ignition safety time	5 secs
Post-ignition time	approx. 20 secs
Delay to 2nd stage V2	52 secs
Reset time from lockout	none
Flame detector:	
- infra-red flicker detector	IRD 1010
length to IRD	cable 10 m max.
- blue flame detector	QRC 1...
length to QRC	cable 1 m max.
Weight, control box and base	0.35 kg
Mounting attitude	any
Insulation Standard	IP 44
Recommended ambient operating temperature for control and flame detector	-20° C... +60° C

FEATURES

1. Flame detection

Flame is detected by means of an infra-red flicker detector, the IRD 1010. The IRD 1010 is designed to respond only to a pulsating infra-red signal, i.e. the oil burner flame, and not the steady glow of the ceramic combustion chamber.

2. Burner control box

If flame is established but a fault occurs within 5 seconds of the expiry of the ignition safety time, the control box will again go to lock-out. Any loss of flame occuring beyond this stage of the light-up sequence, the control box will shutdown, return to the start position and attempt to relight.

3. Safety

The MMD 900 control box complies with the relevent oil burner standards. In addition to the basic safety requirements, the control box has the following features:
- Flame detection with an infra-red flicker detector
- Short ignition safety time (5 secs.)
- Direct lockout during start-up sequence

4. Mounting and electrical wiring

Wiring base:
- 3 earth terminals with additional terminal for burner earthing.
- 3 neutral terminals
- 2 slide-in plates and 2 easy-knockout holes (PG 11 thread), plus 2 easy-knockout holes in the base bottom facilitate the base wiring.

General:
- Mounting position optional, insulation standard IP 44 (water spray). Control box and flame detector should not be subjected to excessive vibration.
- When installing the control, the relevant regulations have to be observed.

COMMISSIONING AND ROUTINE CHECKS

1. Important notes

- On commissioning it is advisable to carefully check the wiring according to the appropriate diagram. Incorrect wiring can damage the unit and endanger the installation.
- The fuse rating has to ensure that the limits specified in Technical Data will not be exceeded. If these precautions are not observed, the effect of a short circuit can cause severe damage to the control and installation.
- For safety reasons a minimum of one control shut-down per 24 hours has to be ensured.
- Disconnect the mains before the control box is plugged in or out.
- The control box is a safety device and must not be opened

2. Function control

For safety reasons the flame detection system should be tested on commissioning the installation as well as after a service or a longer shut-down.

2.1 Start-up with covered flame detector:
- After lock-out safety time
-> lockout

2.2 Start-up with exposed flame detector:
- After ca. 20 sec. pre-purge:
-> lockout

2.3 Normal start-up; with burner in the “run” position, cover up the flame detector:
- New start-up, after end of lock-out safety time
-> lockout

3. Fault finding

3.1 Burner does not start. Coloured programme indicator stopped in white sector:
- Check power supply
- Check that thermostat circuits are closed

3.2 Lock-out during pre-purge. Coloured programme indicator stopped in blue sector:
- Check for false flame signal or flame simulation
- No load at terminal 5
- Faulty IRD / QRC
- Faulty control box

3.3 Burner lights but control box locks out at the end of the yellow sector:
- IRD sensitivity set too low
- IRD / QRC dirty or incorrectly installed
- IRD / QRC incorrectly wired or faulty
- Faulty control box

3.4 Burner does not light. Control box locks out at the end of the yellow sector:
- No ignition
- No oil

3.5 Lockout between end of yellow sector and red line in blue sector:
- Unstable flame after end of ignition safety time

N.B.:
If control box goes to lockout, it is generally performing the function it is designed for. Other possible causes of failure include:
- Ignition spark in wrong position
- No oil
- Oil solenoid valve closed
- Blocked oil filter
- Faulty oil pump

CIRCUIT AND TIMING DIAGRAM MMD 900.1

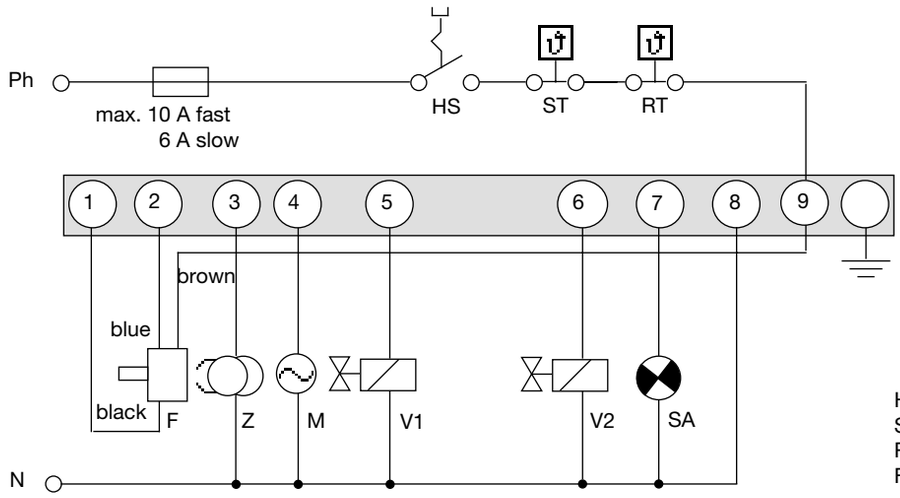

HS	Main Isolator
ST	Limit thermostat
RT	Control thermostat
F	IRD Flicker detector blue flame detector QRC
Z	Ignition
M	Burner Motor
V1	Valve, first stage
V2	Valve, second stage
SA	external lock-out indicator

PROGRAMME SEQUENCE MMD 900.1

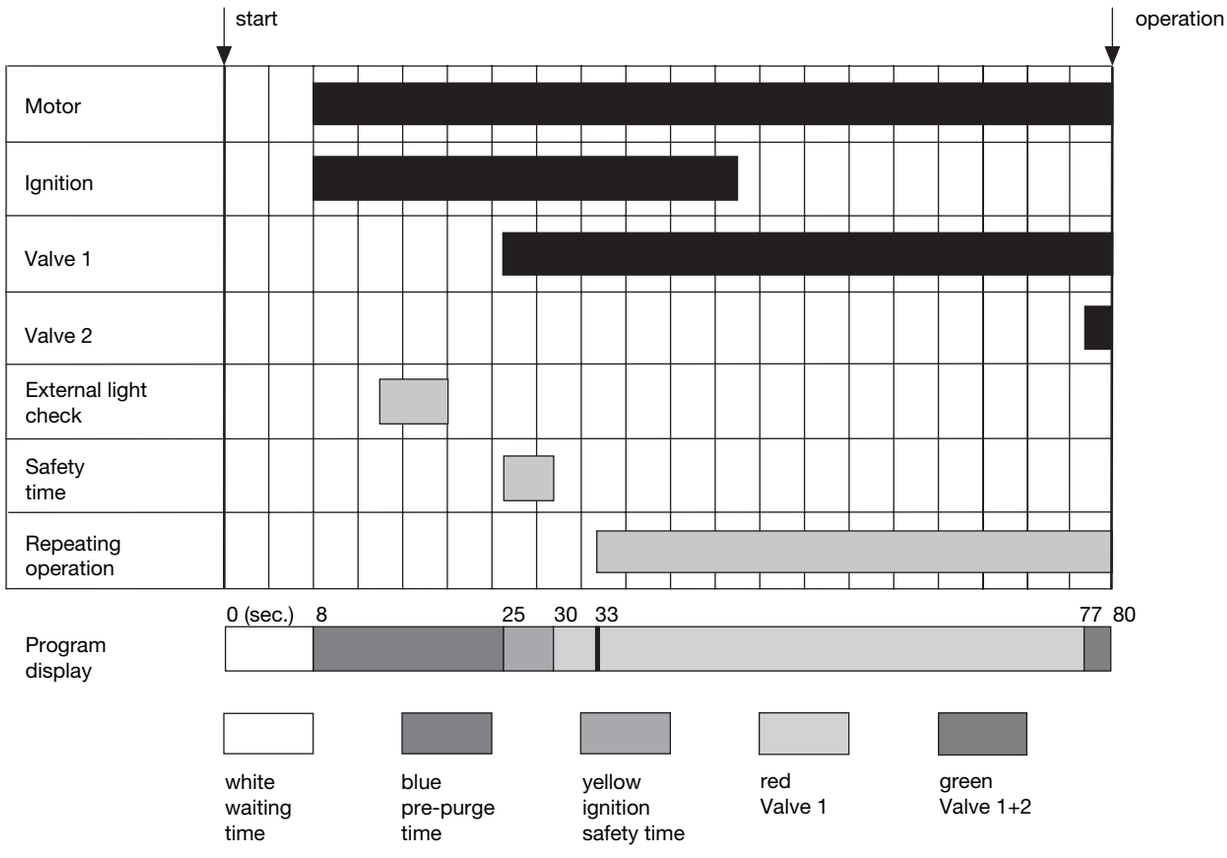

MMD WITH WIRING BASE

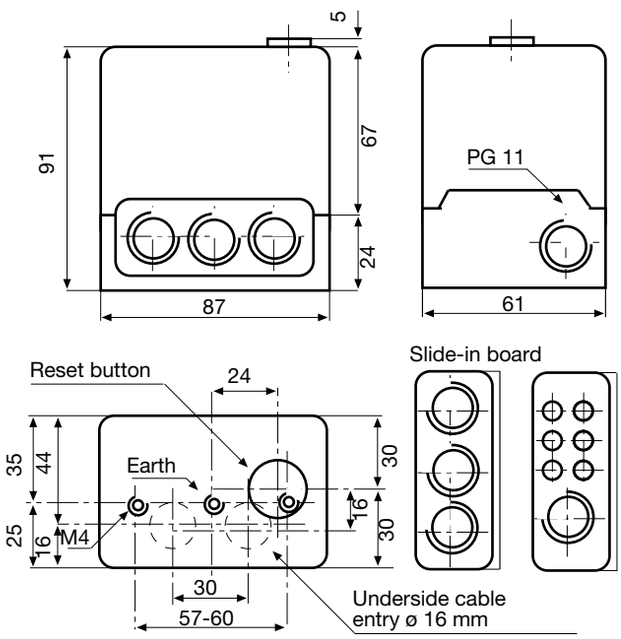

IRD 1010

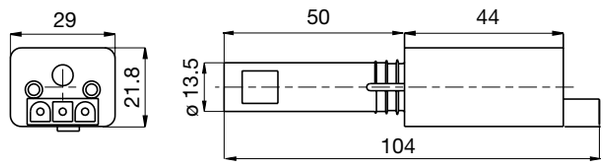

SUPPORT FOR IRD 1010

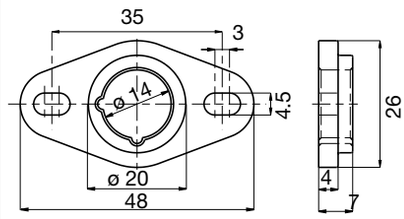

VARIATION

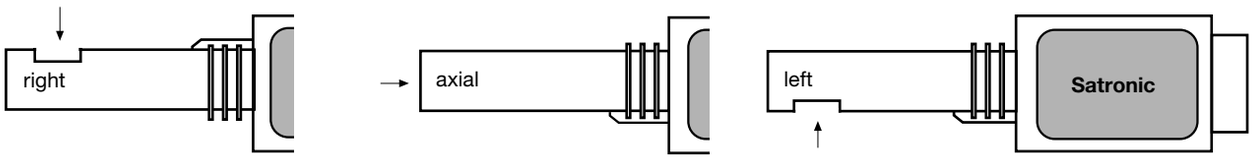

ORDERING INFORMATION

ITEM	DESIGNATION	ITEM NO.
Control box	MMD 900.1	06514
Socket	Socket 701 ABEN	70001
or	Socket MW 880 ABC	74001
Slide-in board	PG-plate	70502
optional	Cable terminal plate	70501
Flame detector	IRD 1010 right	16501
optional	IRD 1010 axial	16502
optional	IRD 1010 left	16503
Support for flame sensor	Support M 74	59074
Connectioncable	Plug type, 3 core cable, 0.6 m with tag wire ends	7236001

The above ordering information refers to the standard version.
Special versions are also included in our product range.

Specifications subject to change without notice.

Satronic AG
Brüelstrasse 7
Postfach 324
CH-8157 Dielsdorf

Oil Burner Control Box

For forced-draught burners with a capacity of over 30 kg/hour in intermittent operation, 1 or 2-stage

Flame detector:
- photo-resistor FZ 711 S
- infrared flicker detector IRD 1010

INTRODUCTION

The TMO 720-4 oil burner control box is capable of controlling and monitoring medium to high capacity forced-draught burners (tested and approved as per EN 230).
It can be employed, as preferred, for multi-stage or modulating operation, with burners of any nominal rating or with stationary warm air generators (as per DIN 4794).
The TMO 720-4 is fully interchangeable with the earlier version, the TMO 720-2.

CONSTRUCTIONAL FEATURES

The control box is enclosed in a protective, flame resistant, transparent, plug-in type plastic housing, and includes:
- Synchronous motor with reduction gearing driving cam switches
- Cam switches with informative, coloured programme indicator
- 16-way cam switch assembly controlling the programme sequence
- 2 DC relays and 1 remanence relay on a common yoke
- Plug-in printed circuit board with electronic components

On the underside of the unit are robust plug terminals where monitoring of the air damper and mode of operation ("repeat cycle" or "direct lockout") can be programmed via three wire jumpers, which may be cut as required.

The following important indicators and operating controls can be found on the front of the control box:
- Reset button incorporating a signal lamp for lockout
- Coloured programme indicator
- Central screw fastening



TECHNICAL DATA

Supply voltage	220 / 240 V (-15... +10%) 50 Hz (40 - 60 Hz)
AC frequency variations	result in proportional timing deviations
Fuse rating	max. 10 A rapid, 6 A slow
Power consumption	15 VA
Max. current per output terminal	4 A
Total	6 A
Approved for	burners of unlimited capacity as per EN 230
Pre-purge time with air damper open	30 sec.
Air damper open/ close time	<60 sec.
Pre-ignition time	30 sec. or 2 sec. (terminal 10)
Safety interval (fixed)	5 sec.
Post-ignition time (fixed)	7,5 sec.
2nd stage delay	11,5 sec.
Reset delay	none
Permissible ambient temp.	-20° C... +60° C for control box and photo-resistor
FZ 711 S light sensitivity	
Red lettering	better than 10 lux, radial
White lettering	better than 10 lux, axial and radial
Photo-resistor cable length	Standard 0.6 m, max. 10 m, max. 200 m laid separately
Insulation standard	IP 44
Weight	approx. 950 g with baseplate and photo-resistor

TECHNICAL FEATURES

1. The control box and photo-resistor can be operated at an ambient temperature of up to 60° C.
2. The timing sequence is controlled by a synchronous motor driving a cam switch assembly. Timing is therefore practically unaffected by variations in the mains voltage.
3. A coloured programme indicator allows visual monitoring of the programme sequence.
4. A remote reset switch can be connected in addition to the built-in reset switch on the control box. Provision has also been made for a remote lockout indicator.
5. A keyed fit ensures that the wrong type of control box cannot be fitted to the baseplate.
6. DC operation of both relays is reliable and clear-cut, at the same time providing a check of the mains voltage.
7. Wiring of the baseplate is eased by the provision of 4 neutral and 3 earth terminals.
8. By cutting the appropriate wire jumper on the underside of the unit, "direct lockout" or "repeat cycle" operating modes can be programmed. The air damper monitoring mode is selected in the same way.
9. If no return signal is received indicating that the air damper has reached the end of its travel, the control box switches to lockout, causing the burner system to shut down.
10. No separate air damper contact is required for release of the high-flame valve.
11. Short or long pre-ignition time can be selected.
12. All electrical and electronic components are incorporated on two plug-in type printed circuit boards.

INSTALLATION INSTRUCTIONS

1. The control box can be mounted on the burner, or installed as part of a separate switching system. It is suitable for mounting in any attitude.
2. The wiring must be checked exactly, ensuring that the control box has been correctly installed. Incorrect wiring puts the safety of the burner system at risk, and could cause damage to the control box or system.
3. It is important that no stray light is allowed to reach the photo-resistor. Stray light can enter the burner through the inspection window or through cracks, or be caused by the glowing refractory layer on the inside of the combustion chamber.
   Stray light can cause the control box to switch to lockout.
4. The control box and photo-resistor should be mounted in a position where the ambient temperature cannot, on any account, rise above 60° C. At higher temperatures there is a risk of unreliable operation, and the life of the control box will be reduced.
5. The unit is designed to withstand moderate vibration, as experienced in burner systems. It should, however, be mounted in a position where it is not exposed to harsh vibration and is protected from bumps.
6. If during the test of the burner the click-rate (according to EN 55014) is higher than the max. allowed valve, a X2-capacitor of 0.1 µF can be connected between terminal 8 and 9.

PROGRAMME SEQUENCE

Normal start procedure

When the controlling thermostat calls for heat, the burner motor and ignition circuits are switched on.
If no air damper lock is fitted, the sequence switches immediately to pre-purge. Otherwise, the sequence only continues when the signal indicating opening of the air damper has been received.
After 30 sec. pre-purge time, the signal commanding the air damper to remain open is interrupted and the switching sequence stops until the "air damper min." signal is received.
The programme sequence is not interrupted if no air damper monitoring is employed. The switching sequence continues and the low-flame valve is opened.
When the flame has been established, and is "seen" by the photo-resistor, the built-in flame-monitoring relay allows the programme sequence to continue to post-ignition and high flame.
The release for high-flame operation causes a voltage to be applied to the high-flame thermostat via terminal 6. If the thermostat demands high flame, the air damper is first opened via terminal 12. On receipt of the signal for "air damper max.", high-flame valve V2 is also opened.
Programme sequence switching finally stops and the control box is in its normal operating mode.

Start sequence without establishment of flame

Less than 5 sec. after release of fuel, the control box switches to lockout.
The indicator on the reset button lights up. The burner system only goes back into operation after the built-in reset button has been pressed or the remote reset has been activated. The normal start sequence begins again after reset, at the end of the safety interval.

Loss of flame during operation

Loss of flame during operation is instantly detected by the photo-resistor due to the absence of radiated light. Depending on how the control box has been "programmed", this is followed by:

a) If jumper II has been cut for "repeat cycle" operation:
   Immediate interruption of the supply of fuel and repeat of normal start sequence.
b) If jumper II is intact, for "direct lockout" operation:
   The control box immediately switches to lockout. A new start sequence can only begin after the reset button has been pressed.

When the ignition transformer is connected to terminal 10, the control box employs a short pre-ignition period. In this way, the ignition procedure is only initiated at the end of pre-purge.

PROGRAMME SELECTION

"Repeat cycle" or "direct lockout"

Jumper II on the underside of the unit should be cut if the control box is required to repeat the start sequence after loss of flame during operation.
By connecting terminals 17 and 18 on the baseplate, the control box can again be programmed for "direct lockout" operation.

Monitoring of the air damper

No monitoring:
Jumper I on the underside of the unit should be left intact. Terminals 14 and 15 on the baseplate should be connected together.
Monitoring of "air damper max.":
Jumper I on the underside of the unit should be left intact. Switch indicating end of air damper travel should be connected between terminals 14 and 15.
Monitoring of "air damper min.":
Cut jumper I on the underside of the unit. Connect terminals 14 and 16 together and the air damper end switch between terminals 14 and 15.
Monitoring of air damper "max." and "min.":
The circuit should be as shown in fig.1, with wire jumper I on the baseplate cut.

No lockout caused by absence of signal indicating air damper at end of travel:
Jumper III should be cut
e.g.: - If air damper open/close time is greater than 60 sec.
- In conjunction with pre-heating for heavy oil

CIRCUIT DIAGRAM - WITH AIR DAMPER CONTROL

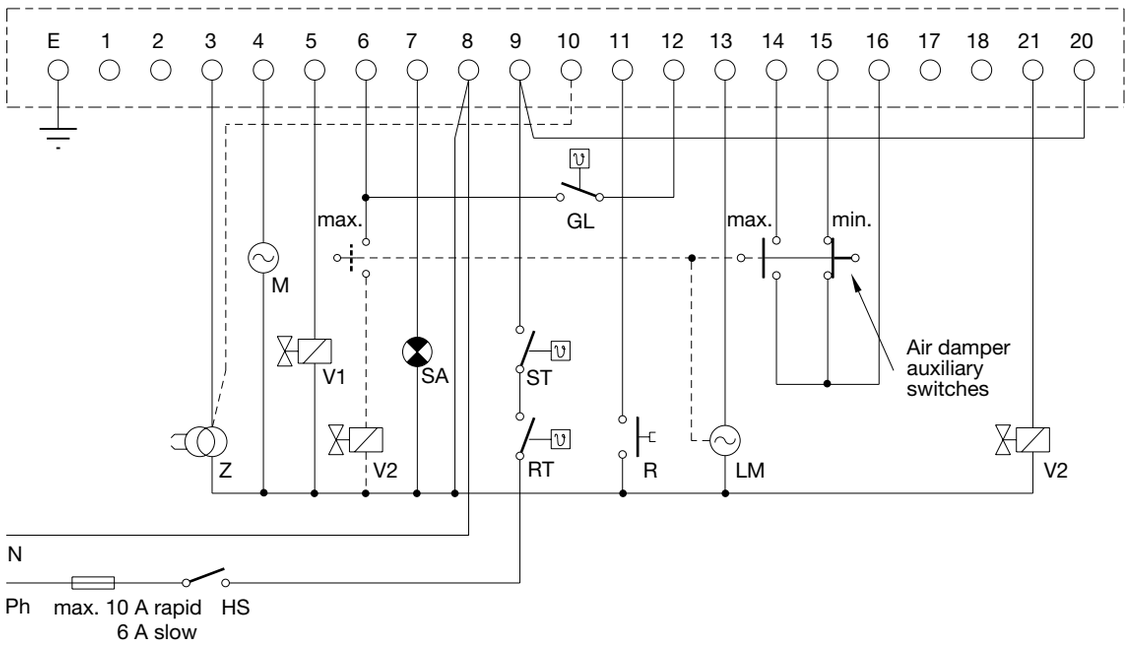

FZ WIRING DIAGRAM

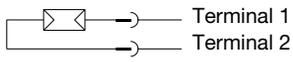

IRD CONNECTION

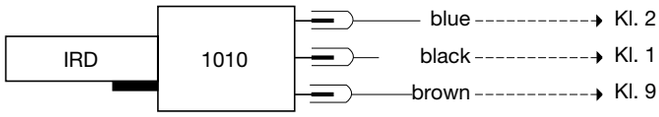

HS	Main switch
ST	Safety thermostat
RT	Controlling thermostat
GL	High-flame thermostat
SA	Remote lockout indicator
LM	Air damper motor
M	Burner Motor
Z	Ignition
R	Remote reset
V1	Solenoid valve, low flame
V2	Solenoid valve, high flame
FZ	Photo-resistor

REFERENCE WIRING V2

- On actuating-drives with 1 "max."-contact:
  V2 on terminal 21.
- On actuating-drives with 2 "max."-contacts:
  V2 by 2nd "max."-contact on terminal 6.

CIRCUIT DIAGRAM - WITHOUT AIR DAMPER CONTROL

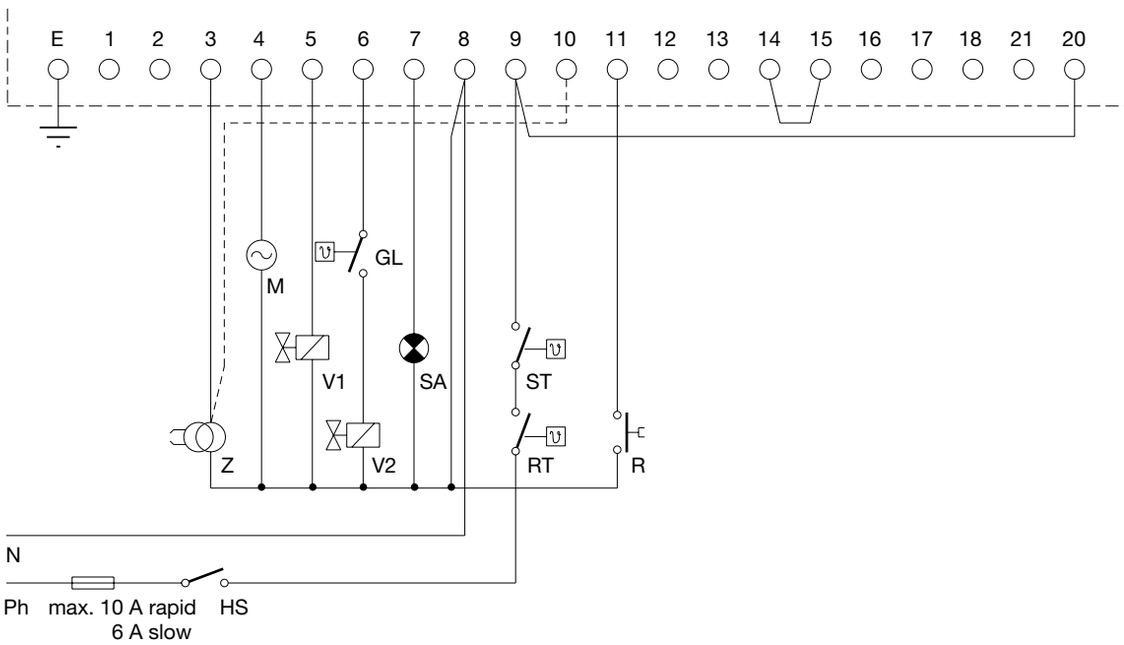

GENERAL CIRCUIT DIAGRAM

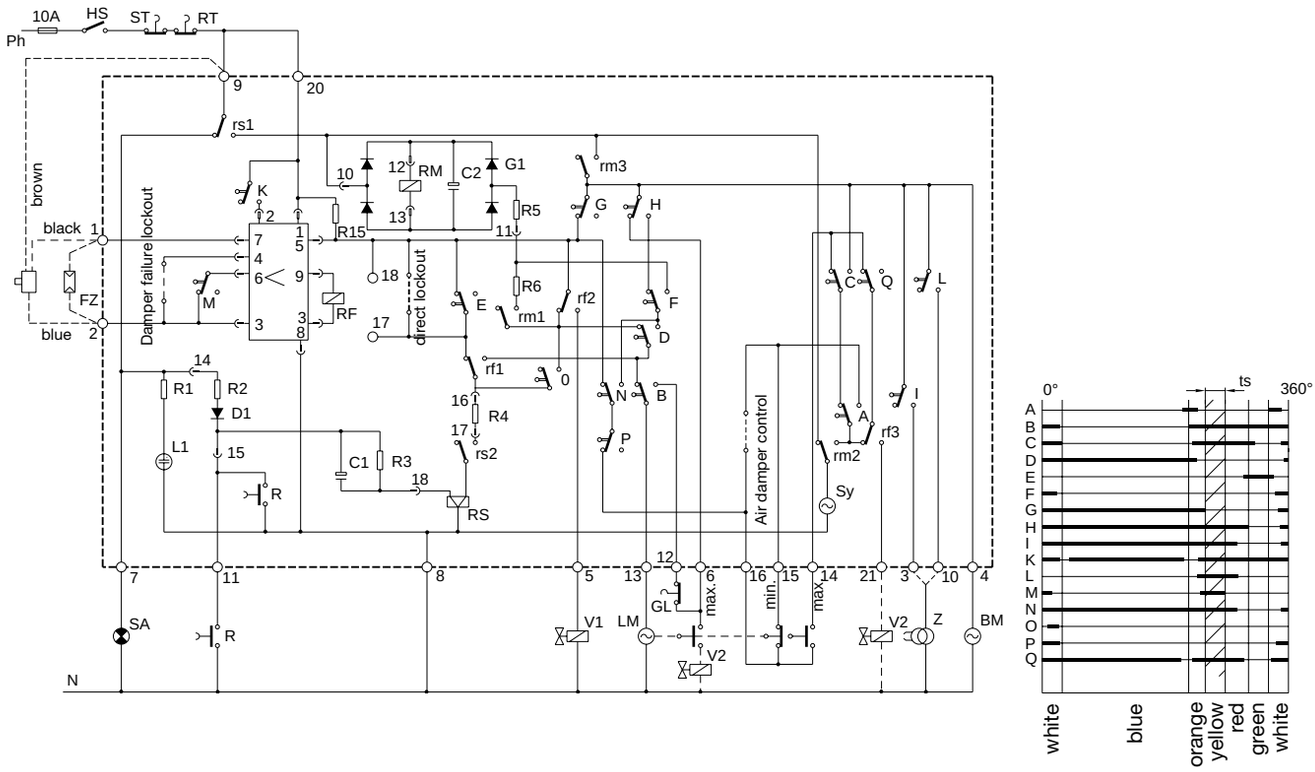

RM	Motor relay	E	Repeat cycle		Relay contacts
RF	Flame relay	F	RM on and hold	rs1	Lockout shutdown
RS	Lockout relay	G	V1 open, beginning of ts	rs2	Lockout relay self interrupt
R	Reset	H	Release for high flame	rm1	RM hold
	Cam switches	I	Long pre-ignition	rm2	Synchronous motor control
A	Synchronous motor control Air damper monitoring	K	LM operation supervision	rm3	Main contact
B	Air damper control	L	Short pre-ignition	rf1	Lockout initiation
C	Synchronous motor control Air damper monitoring	M	Programme start	rf2	Hold V1
D	Switchover to RM hold	P	Check rf1	rf3	Hold V2
		Q	Synchronous motor control Air damper monitoring	tv	Pre-purge time with damper open
				ts	Safety time

PROGRAMME SEQUENCE

a) Start sequence, flame established

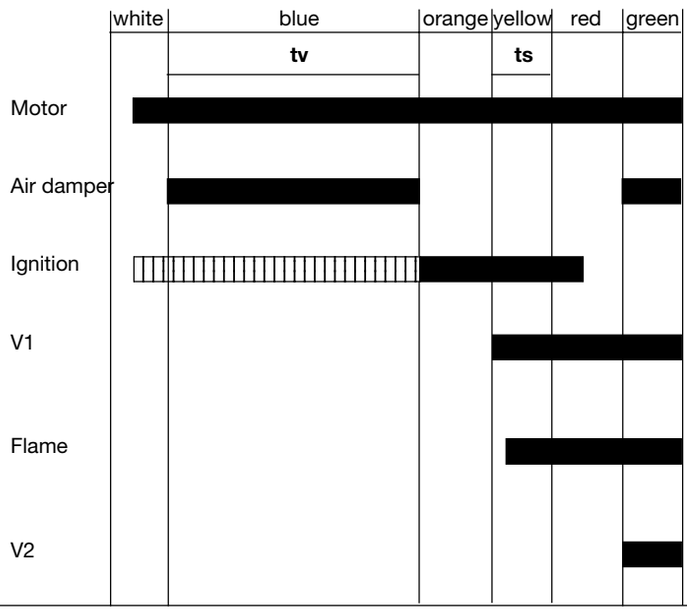

b) Start sequence, flame not established

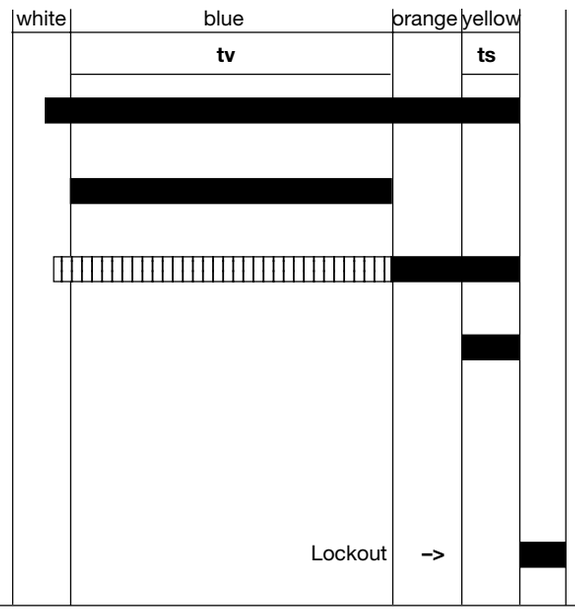

TMO 720-4

SUMMARY OF ALL SAFETY FEATURES

1. Loss of flame during operation results in immediate cancellation of fuel release, followed by direct lockout or repeat of start sequence, as desired.
2. Start without flame establishment causes cancellation of fuel release within 5 sec. of its initial release.
3. Fuel is supplied only when all parts of the unit are functioning correctly. All safety circuits are automatically checked before fuel is released.
4. Continuous air damper monitoring is possible, with air damper failure resulting in lockout. This precaution also protects the ignition transformer from overload.
5. Failure of the mains supply always results in a normal start sequence on restoration of power. If the control box is at lockout, failure of the mains supply does not cause it to reset.
6. Stray light during the pre-purge phase leads to shutdown and lockout.
7. Increased sensitivity of the flame detector during the pre-purge phase ensures that stray light is detected, or deterioration of the photo-resistor's capabilities is noticed before it becomes a risk to the safety of the system. The circuit responsible for stray light security is of a fail-safe design.

COMMISSIONING AND MAINTENANCE

The control box requires no maintenance. It should therefore not be opened.
The photo-resistor should be checked periodically at the light-sensitive side for cleanliness. Dirt and dust reduce the amount of light it receives, which could lead to a shutdown.
Due to the very low variations in the voltage produced by the photo-resistor, measurement of this voltage does not provide reliable results. As a test, a resistor (R=4 k 7) should be connected in series with the FZ 711 S. If the control box does not go to lockout when the next start sequence begins, the amount of light being "seen" by the photo-resistor is satisfactory.
The resistor must be removed when the test has been completed.
On commissioning the system, and when carrying out servicing work, correct operation of the monitoring systems should be checked as follows:

1. Attempt to start the burner with the photo-resistor pulled out and covered up. Lockout should take place at the end of the safety interval (yellow sector). The photo-resistor must be well covered up, otherwise lockout will occur due to stray light.
2. Attempt to start with the photo-resistor exposed to stray light (the lighting in a reasonably bright room is sufficient). A stray-light shutdown should result.
3. Start the system, with the photo-resistor in position, allowing the flame to become established and the programme sequence to complete (end of green sector). Pull out the photo-resistor and cover it up. The result should be as follows:

a) Lockout, if the control box is programmed for "direct lockout" operation
b) If programmed for "repeat cycle" operation, fuel should be cut off immediately, and the sequence restarted.

ADDITIONAL SAFEGUARD AGAINST STRAY LIGHT AND PHOTO-RESISTOR FAILURE

During the pre-purge phase, the control box increases the sensitivity of the flame signal amplifier to a level considerably higher than that for normal burner operation.
The slightest stray light, or even a minor deterioration of the photo-resistor's operating characteristics, cause a stray-light shutdown before fuel is released.

FAULT FINDING

1. Burner does not start, programme indicator stops at end of green section, no lockout indicated:
   a) Incorrect wiring
   b) No voltage at terminal 9
   c) No neutral connection
2. Lockout, with programme indicator at beginning or end of blue section:
   a) No signal indicating "damper max."
   b) No signal indicating "damper min."
   c) In systems which do not provide monitoring of the air damper position, jumper I on the underside of the unit has been cut, or the connection in the baseplate between terminals 14 and 15 is missing.

Caution: The signals indicating the air damper positions "max." or "min." for pre-purge or end of ignition, must be received within 60 sec. At the end of this delay, lockout will occur, preventing the burner from remaining permanently on pre-purge.

3. Lockout in blue section:
   a) Stray light detected by photo-resistor
   b) Photo-resistor defective
   c) Solenoid valve leaking or open
   d) Defect in control box flame-monitoring circuit
4. Burner starts and fuel release signal is given, but no flame is established. Lockout at the end of the yellow section:
   a) No ignition
   b) Fuel supply fault
   c) Solenoid valve defective or not connected
5. Burner starts and flame is established, lockout occurs at the end of the yellow section:
   a) Photo-resistor is dirty
   b) Photo resistor installed incorrectly-"sees" no light
   c) Photo-resistor defective or connected incorrectly
   d) Control box flame-monitoring circuit defective
   e) No voltage at terminal 20

Caution: When a control box switches to lockout, it is, in most cases, performing the function for which it was designed. Apart from the possibilities already mentioned, lockout can be caused by one or more of the following:

1) Ignition spark in wrong position
2) Fuel tank empty
3) Fuel valve closed
4) Oil filter blocked
5) Defective oil pump
6) Poor combustion
7) Unreliable burner start




TMO 720-4 WITH BASEPLATE

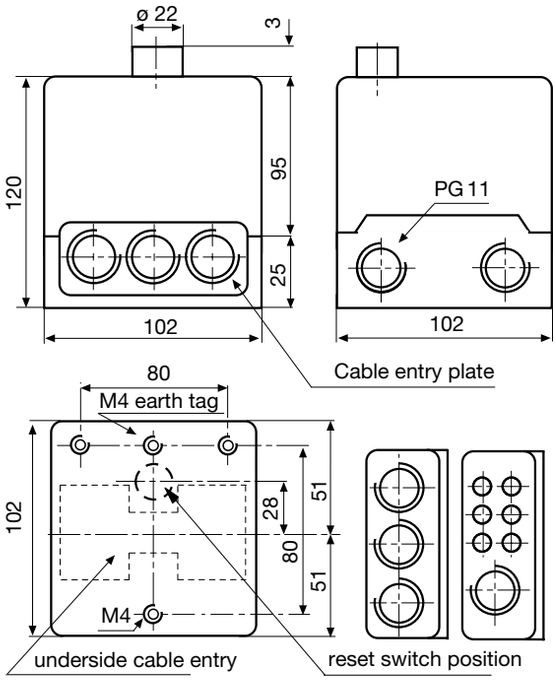

FZ 711 S PHOTO-RESISTOR

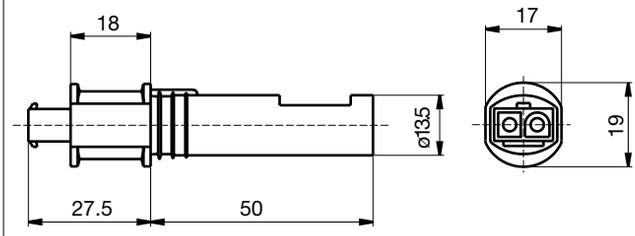

HOLDER ZU FZ 711 AND IRD 1010

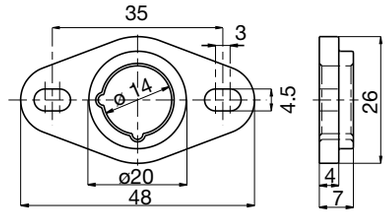

IRD 1010

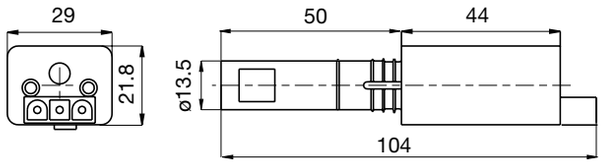

IRD VARIATIONS

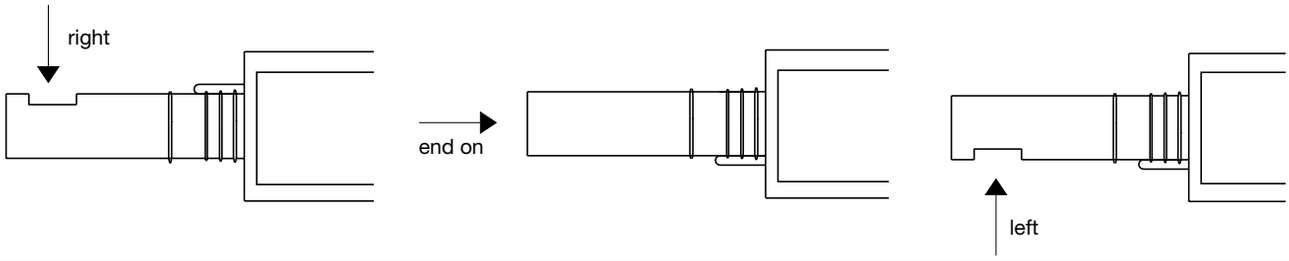

ORDERING INFORMATION

ITEM	DESIGNATION	ITEM NO.
Control box	TMO 720-4	08001
Baseplate	TMO base	70201
Insert plate (2x)	PG plate	70502
optionally	Cable entry plate	70501
Flame detector	FZ 711 S red	40001
optionally	FZ 711 S white	41001
Infrared flicker detector	IRD 1010 right	16501
optionally	IRD 1010 end on	16502
optionally	IRD 1010 left	16503
Flame detector mount	FZ Holder M74	59074
FZ 711 S cable	Sensorcable, 2-wire, 0.5 m with tag wire ends	7225001
IRD / FZ cable	Sensorcable, 3-wire, 0.6 m, with tag wire ends	7236001

The above ordering information refers to the standard version.
Special versions are also included in our product range.

Specifications subject to change without notice.

Satronic AG
Brüelstrasse 7
Postfach 324
CH-8157 Dielsdorf

Oil Burner Safety Control

For oil burners on Direct Air Heaters and for burners above 30 kg/h throughput for intermittend operation, with or without oil preheater, 1- or 2-stage, recycling and post-purge after loss of flame
Flame detection:
- Photoresistor MZ 770 S
- Infrared-flicker detector IRD 1010
- UV flame sensor UVD 970



INTRODUCTION

The DKW 972/976 oil burner safety control boxes are suitable for oil burners with or without preheater with throughputs exceeding 30 kg/h. They are approved and certified according to the applicable European standards and regulations.
The microprocessor- based programming sequence ensures extremely stable timings independent of voltage variations, ambient temperature and/or switch-on cycles. The built-in information system not only provides a continuous monitoring of the actual state of the box (very helpful especially for monitoring the start-up phase) but also informs about the cause of a possible lock out. The lock out cause is stored in such a way that it can be retrieved even after a power failure. The control box is designed for maximum safety in case of fluctuations in the voltage supply. If the mains voltage drops below the permitted level, operation is interrupted and the control box automatically prevents the start sequence from being repeated. In this way, the safety of the system is not put at risk by a drop in the mains voltage. This low-voltage protection works not only during start-up but also permanently during operation.

TYPES AVAILABLE

DKW 972	2-stage operation, without terminals for oil preheater
DKW 976	2-stage operation, with override contact, with terminals for oil preheater

CONSTRUCTIONAL FEATURES

The control box circuitry is protected by a flame resistant, transparent plug-in type plastic housing. A central fixing screw locks the control box to the wiring base. The plug-in control box incorporates the microprocessor based timer, flame check and reset circuits. Manual reset from lock out and set to lock out is provided by a push button with an integrated lock out signal lamp. The wiring base S98 is equipped with spare- and extraterminals and allows together with a variety of cable entry points utmost flexibility of electrical wiring.

The DKW 972 is with the exception of the IRD connection compatible to the TTO 872 and MMO 872. The DKW 976 is with the exception of the IRD connection compatible to the TTO 876 and MMO 876.

TECHNICAL DATA

Operating voltage	220 / 240 V (-15... +10%) 50 Hz (±5%)
Fuse rating	10 A fast, 6 A slow
Power consumption	ca. 15 VA
Max. load per output	
- term. 3 ignition trafo	1.5 A, cos φ 0.2
- term. 4 motor	2.0 A, cos φ 0.4
- term. 5 solen. valves	1.0 A, cos φ 0.4
- term. 6 solen. valves (DKW 972)	1.0 A, cos φ 1.0
- term. 6 oil preheater (DKW 976)	2.0 A, cos φ 1.0
- term. 7 alarm indicator	1.0 A, cos φ 0.4
- term. B solen. valves (DKW 976)	1.0 A, cos φ 0.4
total load	5.0 A, cos φ 0.4 max. 10 A during 0,5 sec
Reset time from lock out	none
Pre-purge after loss of flame during operation	60 sec
Flame detectors	< 2 m length of cable
MZ 770 S	side-on and end-on viewing
Light sensitivity	better 6 Lux
IRD 1010	side-on or end-on viewing
UVD 970	end-on viewing
Weight incl. Wiring base	190 g
Mounting position	any
Protection class	IP 40
Approved ambient parameter for control and flame detector	max. 95% at 30° C
- for operation	-20° C... +60° C
- for storage	-20° C... +80° C
Build-up of ice, penetration of water and condensing water are	inadmissible
Approvals according to European standards	EN 230, as well as all other relevant Directives and standards

Timings (sec.)

Model	waiting time start	max. warm-up time oil preheater **ta**	Pre-purge and pre-ignition time **tv1**	Stray light monitoring **tf**	safety time **ts**	Post-ignition time after V1 **tn**	delay time to V2 **tv2**
05	0	400	20	5	5	7	20

APPLICATION FEATURES

1. Information system

The information system is microprocessor based and reports on all aspects of burner control box operation and flame supervision. It informs continuously about the actual programming sequence the unit is just performing. Besides monitoring of the programming sequence it also allows to identify errors during start-up of operation without any additional testing devices. The automatically performed diagnoses is a valuable tool which facilitates service/ maintenance work and therefore saves costs. The analyses of the error cause can be done directly on stage or if not possible afterwards as the lock out reason is stored in a non-volatile lock out mode memory.
The information system communicates with the outside world using a LED (the used Flash-Code is similar to the Morse-Code). The messages are optically transmitted by flashing appropriately a LED. Using an (optional) additional terminal the messages can be recorded and displayed in easy readable form.

1.1 Programming sequence display

The built-in microprocessor controls not only the programming sequence but the information system too. The individual phases of the programming sequence are displayed as Flash-Code.
The following messages can be distinguished:

Message	Flash-Code
waiting for release thermostat (DKW 976 only)	▮ ▮ .
pre-ignition tv1	▮ ▮ ▮ ▮ .
safety time ts and post ignition tn	▮ ▮ .
delay 2nd stage tv2	▮ ▮ ▮ .
running	▮ _
low mains voltage	▮ ▮ ▮ _
post-purge	▮ .

Description
▮ = short pulse
▮ = long pulse
. = short pause
_ = long pause

1.2 Lock-out diagnoses

In case of a failure the LED is permanently illuminated. Every 10 seconds the illumination is interrup-ted by a flash code, which indicates the cause of the error. Therefore the following sequence is performed which is repeated as long as the unit is not reset.

Sequence:

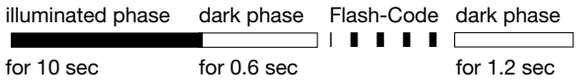

Error diagnosis

Error message	Flash-Code	Possible fault
lock out	▮ ▮ ▮ ▮ ▮	within lock out safety time no flame establishment
stray light	▮ ▮ ▮ ▮ ▮	stray light during monitored phase, detector may be faulty
limit thermostat time-out (only DKW 976)	▮ ▮ ▮ ▮ ▮	contact of thermostat release does not close within 400 sec.

Flash-Code for manual lock out	
manual/external lock out (see also 4. lock out and reset)	▮ ▮ ▮ ▮ _ ▮ ▮ ▮ ▮ ▮

2. Flame control

The following detectors can be used for flame supervision:
– for yellow oil flame: photoresistor MZ 770 S
– for blue or yellow flame: infrared-flicker detector type IRD 1010 or as an alternative the UV solide state flame sensor UVD 970
Generally, the no flame signal is generated at light levels below 3 Lux with respect to the operating cycle of the control. According to EN 230 stray light safety level has to be established in conjunction with the accompanying burner. Connecting the IRD 1010 or UVD 970, the correct wiring has to be observed.

2.1 Stray light monitoring

The stray light check is performed at the end of the pre-purge time for the duration as mentioned in the technical datas.

3. Burner control

DKW 976 with oil preheater
The fuel heater of the burner has to have a temperature control switch. The closing contact-switch of the heater has to be connected between terminals 4 and 6. A special contact in the control unit connects the thermo-switch of the heater as soon as the burner is operating and a photocurrent is generated. Therefore an interruption of the burner operation due to a decrease in oil temperature is prevented (e.g. in case of high oil flow).
According to EN 230 A 2.1, the short circuiting of the thermoswitch is allowed only for an oil flow of max. 10 kg/h oil. Burners with a higher throughput have to shut down if the oil temperature gets below the allowed minimum. In such a case the thermo-switch has to be put in the phase-circuit and terminals 4 and 6 have to be connected with a link.
The contact of the release thermostat of the oil preheater is monitored. If the contact does not close within the predefined time (400 sec), the programmer goes into lock out mode.
Therefore excessive oil temperatures in the preheater over long periods can be prevented avoiding cracking of the oil and oulsequent blocking of the preheater or nozzle.

DKW 976 without oil preheater
In such a case the terminals 4 and 6 have to be connected with a link.



Attention
The switch of the release thermostat for the oil preheater must never be linked between 4 and 9 or 6 and 9!
During lockout, the preheater will not be separeted from power. This could lead to a defective pre-heater due to burn out its heating winding.

4. Lock out and reset

The unit can be reset or brought into lock out mode in two different ways:

Internal
In the lock out case the unit can be reset by pushing the built-in button meaning a new start-up cycle is performed.

External
Instead of using the built-in lock out button the same function can be achieved by using an external button which connects terminal 9 with A (see also circuit and block diagram).

If the pushputton (internal or external) is pressed during normal operation or during the start sequence for more then 3 sec. and afterwards released, the control box will perform a shutdown.



Please note
The unit can only be brought to lockout mode or be reseted if power is applied to the unit.

5. Low-voltage protection

The mains voltage has to be more than 187 V_{eff} in order to allow the unit to perform a start-up.
The mains voltage is not only monitored in the start-up phase but also permanently during operation. If the voltage drops below < 160 V_{eff} during start-up or run time the control box goes into lock out mode. If the voltage rises again, the control box performs automatically a start-up as soon as the mains voltage is > 187 V_{eff}.

6. Safety

The design and control sequence of the DKW 972/976 controls will comply with the currently applicable standards and regulations (see also TECHNICAL DATA).
The controller is recycling. This means in case of loss of flame during operation the shut-off valves close immediately and a post-purge of 60 seconds is follows. Afterwards a new start up will be performed.

7. Mounting and electrical wiring

Wiring base:
- 3 earth terminals with additional terminal for burner earthing
- 3 neutral terminals with internal permanent connection to neutral terminal 8
- 2 independant spare terminals (S1 and S2)
- extra terminals A, B and C are standard
- 2 slide-in plates and 2 easy knock out holes (PG11 thread) plus 2 knock out holes in the base bottom faciliate the base wiring

The digital controls are ideally wiried on the new wiring bases S98, which are equipped with (terminals B and C are only for some special types of DMO or DMG) terminal A, which is used for the remote reset / remote lockout functions.

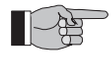

Please note
To assist trouble-free operation the main neutral connection terminal in the wiring base must be fully tightened. The terminal screws are already in the undone position. To connect a wire to the terminal, the screw only needs to be fastened.

General: The control box and detector probes should not be subjected to excessive vibration.

INSTALLATION INSTRUCTIONS AND MAINTENANCE

1. Important notes

- The controls must be installed by qualified personnel only. The relevant national regulations have to be observed.
- On commissioning the wiring has to be carefully check-ed according the appropriate diagram, Incorrect wiring can damage the unit and endanger the installation.
- The fuse rating has to ensure that the limits specified in TECHNICAL DATA will not be exceeded. If these precautions are not observed, the effect of a short circuit can cause severe damage to the control and installation.
- For safety reasons a minimum of one control shutdown per 24 hours has to be observed.
- Disconnect the mains before the control box is plugged in or out.
- The control box is a safety device and must not be opened!

2. Function control

For safety reasons the flame detection system should be tested on commissioning the installation as well as after a service or longer shut-down.

a) Start-up with covered flame detector
   – After safety time is over the unit has to go into lock out mode!

b) Start-up with exposed flame detector
   – After 17 sec prepurge time the unit has to go into lock out mode!

c) Normal start up with burner in the normal/operation position, cover up the flame detector.
   – The shut-off valve must close immediately and a post-purge of 60 seconds must follow.
   – Afterwards a normal start up should follow and a the end of safety time the unit has to go into lock out mode !

3. Fault finding

The built-in information system facilitates the trouble shooting in the case of problems occurring during start-up or during operation.
A list of possible lock out messages can be found in APPLICATION FEATURES chapter 1.2.



Please note:
The control box is locked in lock out mode and the reasen for the lock out is displayed until the control box is reset, either by en internal or external reset (see also subject “3. Lock out and reset").

Removing the control box from its wiring base or by interrupting the supply line may not reset a lock out (according to EN 230). There fore, by applying power, the fan motor/ nozzle preheater switches on for 2-3 secs. before the control box goes to lock out again and the cause of the last lock out.

Error	Possible fault
Burner not working	- Thermostat circuit open - Faulty electrical wiring - Oil preheater defective - mains voltage < 187 V
Fan motor/nozzle preheater starts for a short period of time, control box goes to louk out	- Control box has not been reset
Burner starts, flame not established, lock out	- Stray light on flame detector - No ignition or no fuel
Burner starts, flame established, after safety time, lock out	- Dirty or faulty flame detector - Insufficient light on detector - Sensitivity adjustment too low on IRD

DKW 972/976

CIRCUIT AND TIMING DIAGRAM DKW 972

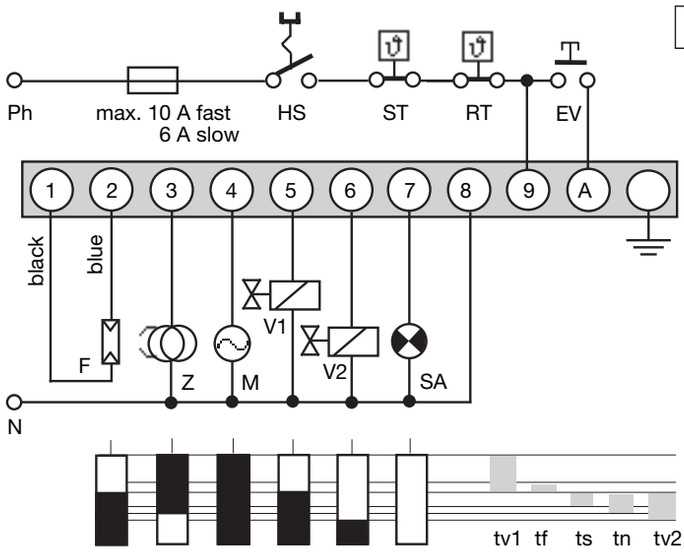

IRD-/UVD-CONNECTION

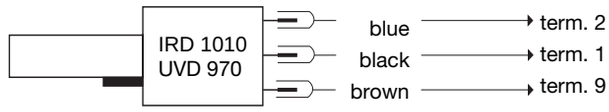

HS	Mains switch
ST	Limit thermostat
RT	Control thermostat
EV	External reset and lock out button
F	Flame detector MZ 770 S (IRD 1010,UVD 970 see separate diagram)
Z	Ignition
M	Burner motor
V1	Oil solenoid valve, 1st-stage
V2	Oil solenoid valve, 2st-stage
SA	External lock out signal
tv1	Pre-purge and pre-ignition time
tf	stray light monitoring
ts	Lock out safety time
tn	Post-ignition time
tv2	Delay time to oil V2

CIRCUIT AND TIMING DIAGRAM DKW 976

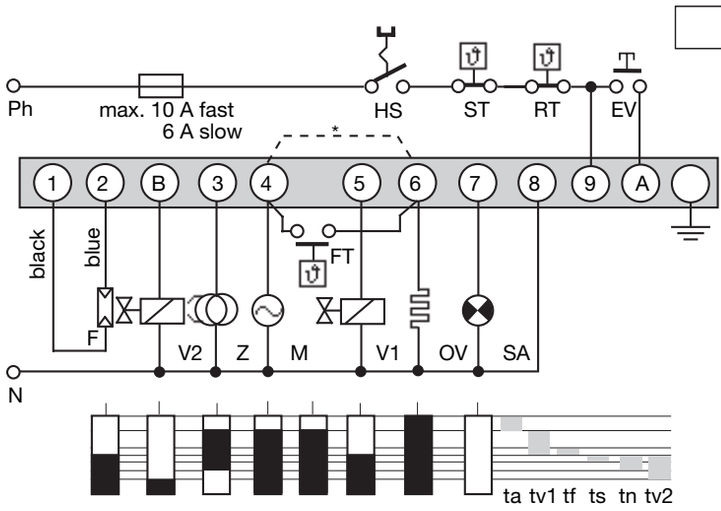

IRD-/UVD-CONNECTION

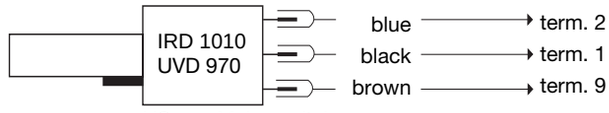

HS	Mains switch
ST	Limit thermostat
RT	Control thermostat
EV	External reset and lock out button
F	Flame detector MZ 770 S (IRD 1010,UVD 970 see separate diagram)
Z	Ignition
M	Burner motor
V1, V2	Solenoid valves
OV	Oil preheater
FT	Release thermostat oil preheater
*	For burners without fuel heaters term. 4 and 6 have to be connected with a link
SA	External lock out signal
ta	Pre-heat-time oil preheater
tv1	Pre-purge and pre-ignition time
tf	stray light monitoring
ts	Lock out safety time
tn	Post-ignition time
tv2	Delay time to oil V2

BLOCK DIAGRAM DKW 972

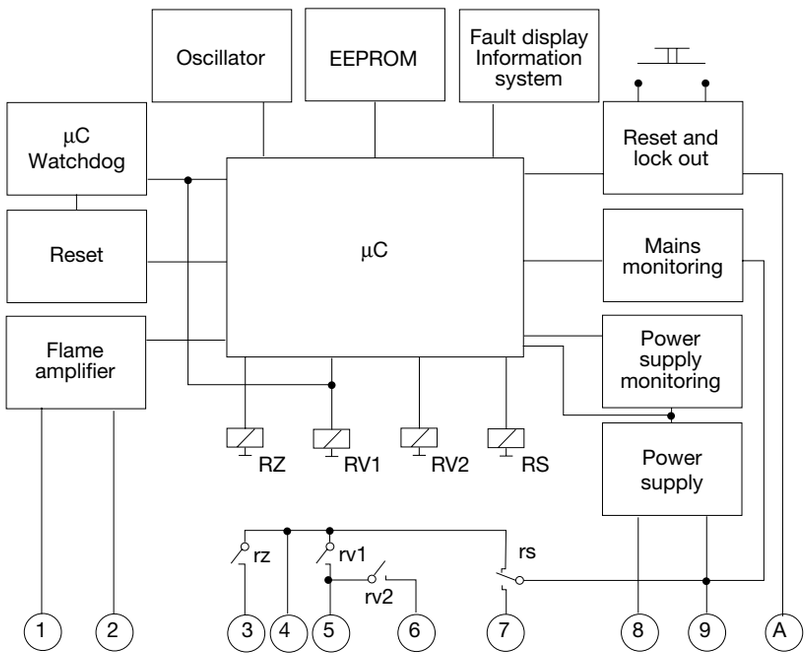

BLOCK DIAGRAM DKW 976

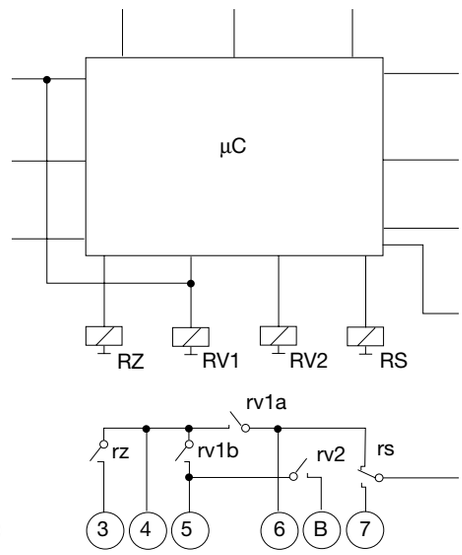

DKW 972/976

DKW 972/976 WITH SOCKET

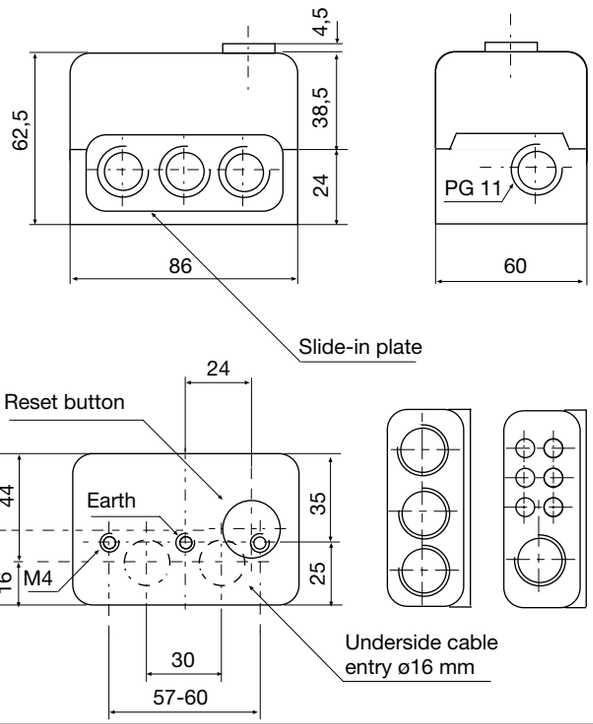

HOLDER FOR MZ 770 S

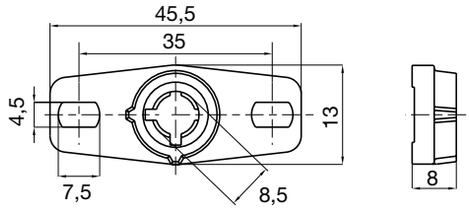

SHAFT MZ 770 S

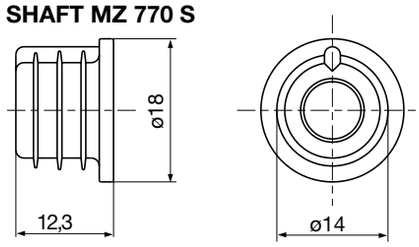

PHOTORESISTOR MZ 770 S

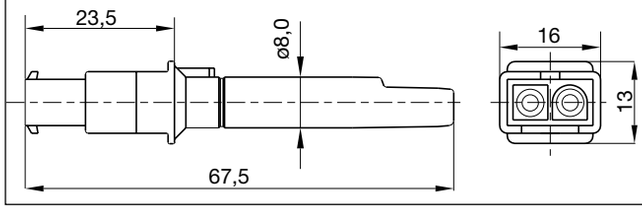

UVD 970

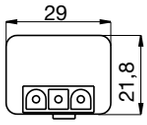

IRD 1010

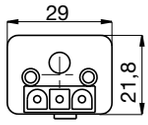

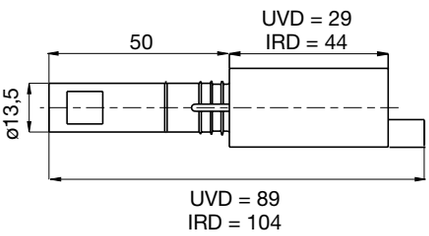

HOLDER M74 FOR IRD OR UVD

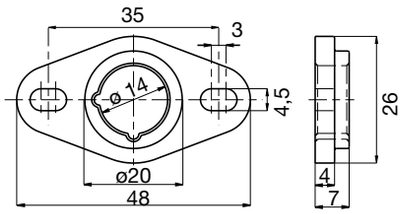

VARIATION IRD

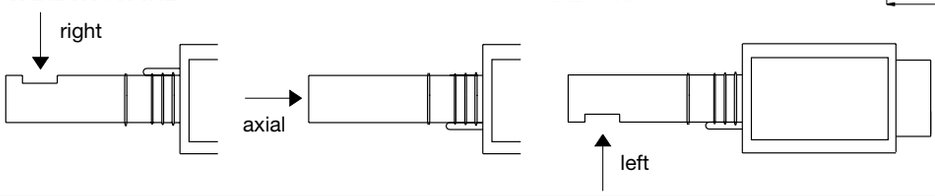

ORDERING INFORMATION

ITEM	DESIGNATION	ITEM NO.
Control box	Typ DKW 972 Mod. 05	0322005
or	Typ DKW 976 Mod. 05	0326005
Socket	Wiring base S98 / 12 terminals	75310
Insert plate	PG-Plate	70502
optional	Cable entry plate	70501
Flame detector	MZ 770 S	50001
optional	MZ 770 S with shaft	51001
optional	IRD 1010 right	16501
	IRD 1010 end-on	16502
	IRD 1010 left	16503
optional	UVD 970	16702
Support for flame detector	Holder for MZ 770 S	59101
optional	Holder M 74 for IRD or UVD	59074
Connection cable	Plug type, 3 core cable, 0.6 m with tag wire ends	7236001
Connection cable	Plug type, 2 core cable, 0.5 m with tag wire ends	7225001

The above ordering information refers to the standard version.
Special versions are also included in our product range.

Specifications subject to change without notice

Satronic AG
Brüelstrasse 7
Postfach 324
CH-8157 Dielsdorf

certified Qualitysystem
ISO 9001 / EN 29001
Reg. Nr. 10529

satronic
A Honeywell Company

DMO 976

Oil Burner Safety Control

For 1- or 2-stage oil burners up to 30 kg/h throughput and intermittent operations with or without oil preheating facility to connect an air damper motor

Flame detection:
- **Photoresistor MZ 770 S**
- **Infrared-flicker detector IRD 1010**
- **UV flame sensor sensor UVD 970**

INTRODUCTION

The DMO 976 oil burner safety control boxes are suitable for oil burners with or without preheater with throughputs up to 30 kg/h. They will be approved and certified according to the applicable European standards and regulations.
The microprocessor- based programming sequence ensures extremely stable timings independent of voltage variations, ambient temperature and/or switch-on cycles. The built-in information system not only provides a continuous monitoring of the actual state of the box (very helpful especially for monitoring the start-up phase) but also informs about the cause of a possible lock out. The lock out cause is stored in such a way that it can be retrieved even after a power failure.
The control box is designed for maximum safety in case of fluctuations in the voltage supply. If the mains voltage drops below the permitted level, operation is interrupted and the control box automatically prevents the start sequence from being repeated. In this way, the safety of the system is not put at risk by a drop in the mains voltage. This low-voltage protection works not only during start-up but also permanently during operation.

CONSTRUCTIONAL FEATURES

The control box circuitry is protected by a flame resistant, transparent plug-in type plastic housing. A central fixing screw locks the control box to the wiring base.
The plug-in control box incorporates the microprocessor based timer, flame check and reset circuits.
Manual reset from lock out and set to lock out is provided by a push button with an integrated lock out signal lamp.
The wiring base S98 is equipped with spare- and extraterminals and allows together with a variety of cable entry points utmost flexibility of electrical wiring.



TECHNICAL DATA

Operating voltage	220 / 240 V (-15... +10%) 50 Hz (±5%)
Fuse rating	10 A fast, 6 A slow
Power consumption	ca. 15 VA
Max. load per output	
- term. 3 ignition trafo	1.0 A, cos φ 0.2
- term. 4 motor	2.0 A, cos φ 0.4
- term. 5 + B solenoid valves	1.0 A, cos φ 0.4
- term. 6 oil preheater	2.0 A, cos φ 1.0
- term. 7 alarm indicator	1.0 A, cos φ 0.4
- term. C air damper	1.0 A, cos φ 0.4
total load	4.0 A, cos φ 0.4 max. 10 A during 0.5 sec
Reset time from lock out	none
Flame detectors	< 3 m length of cable
MZ 770 S	side-on and end-on viewing
Light sensitivity	better 6 Lux
IRD 1010	side-on or end-on viewing
UVD 970	end-on viewing
Weight incl. Wiring base	190 g
Mounting position	any
Protection class	IP 40
Approved ambient parameter for control and flame detector	max. 95% bei 30° C
- for operation	0° C... +60° C
- for storage	-20° C... +80° C
Build-up of ice, penetration of water and condensing water are	inadmissible
Approvals according to European standards	EN 230, aswell as all other relevant Directives and standards

Timings (sec.)

Model	waiting time start	max. warm up time oil preheater **ta**	Pre-purge and pre-ignition time **tv1**	LK-open command during pre-purge **tlk**	LK- close movement **tr**	Stray light monitoring **tf**	safety time **ts**	Post-ignition time after V1 **tn**	delay time terminal B / C **tv2**
01	0	400	22	17	5	10	5	7	13

0736.10-01-e/01/99

APPLICATION FEATURES

1. Information system

The information system is microprocessor based and reports on all aspects of burner control box operation and flame supervision. It informs continuously about the actual programming sequence the unit is just performing. Besides monitoring of the programming sequence it also allows to identify errors during start-up of operation without any additional testing devices. The automatically performed diagnoses is a valuable tool which facilitates service/ maintenance work and therefore saves costs. The analyses of the error cause can be done directly on stage or if not possible afterwards as the lock out reason is stored in a non-volatile lock out mode memory.
The information system communicates with the outside world using a LED (the used Flash-Code is similar to the Morse-Code). The messages are optically transmitted by flashing appropriately a LED. Using an (optional) additional terminal the messages can be recorded and displayed in easy readable form.

1.1 Programming sequence display

The built-in microprocessor controls not only the programming sequence but the information system too. The individual phases of the programming sequence are displayed as Flash-Code.
The following messages can be distinguished:

Message	Flash-Code
waiting for control thermostat	▮ ▮ .
Pre-purge with air damper open	▮ ▮ ▮ .
pre-ignition tv1	▮ ▮ ▮ ▮ .
safety time ts post ignition tn	▮ ▮ .
delay 2nd stage tv2	▮ ▮ ▮ .
running	▮ _
low mains voltage	▮ ▮ ▮ _

Description
▮ = short pulse
▮ = long pulse
. = short pause
_ = long pause

1.2 Lock-out diagnoses

In case of a failure the LED is permanently illuminated. Every 10 seconds the illumination is interrup-ted by a flash code, which indicates the cause of the error. Therefore the following sequence is performed which is repeated as long as the unit is not reset.

Sequence:

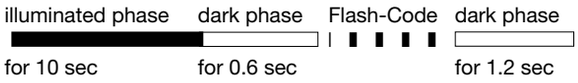

Error diagnosis

Error message	Flash-Code	Possible fault
lock out	▮ ▮ ▮ ▮ ▮	within lock out safety time no flame establishment
stray light	▮ ▮ ▮ ▮ ▮	stray light during monitored phase, detector may be faulty
limit thermostat time-out	▮ ▮ ▮ ▮ ▮	contact of limit thermostat does not close within 400 sec.

Flash-Code for manual lock out	
manual/external lock out (see also 4. lock out and reset)	▮ ▮ ▮ ▮ ▮ _ ▮ ▮ ▮ ▮ ▮ ▮

2. Flame control

The following detectors can be used for flame supervision:
– for yellow oil flame: photoresistor MZ 770 S
– for blue or yellow flame: infrared-flicker detector type IRD 1010 or as an alternative the UV solide state flame sensor UVD 970
Generally, the no flame signal is generated at light levels below 3 Lux with respect to the operating cycle of the control. According to EN 230 stray light safety level has to be established in conjunction with the accompanying burner. Connecting the IRD 1010 or UVD 970, the correct wiring has to be observed.

2.1 Stray light monitoring

The stray light check is performed at the end of the pre-purge time for thr duration as mentioned in the technical datas.

3. Burner control

With oil preheater
The fuel heater of the burner has to have a temperature control switch. The closing contact-switch of the heater has to be connected between terminals 4 and 6. A special contact in the control unit connects the thermo-switch of the heater as soon as the burner is operating and a photocurrent is generated. Therefore an interruption of the burner operation due to a decrease in oil temperature is prevented (e.g. in case of high oil flow).
According to EN 230 A 2.1, the short circuiting of the thermoswitch is allowed only for an oil flow of max. 10 kg/h oil. Burners with a higher throughput have to shut down if the oil temperature gets below the allowed minimum. In such a case the thermo-switch has to be put in the phase-circuit and terminals 4 and 6 have to be connected with a link.
The contact of the release thermostat of the oil preheater is monitored. If the contact does not close within the predefined time (400 sec), the programmer goes into lock out mode.
Therefore excessive oil temperatures in the preheater over long periods can be prevented avoiding cracking of the oil and oulsequent blocking of the preheater or nozzle.

Without oil preheater
In such a case the terminals 4 and 6 have to be connected with a link.



Attention
The switch of the release thermostat for the oil preheater must never be linked between 4 and 6 or 6 and 9!
During lockout, the preheater will not be separeted from power. This could lead to a defective pre-heater due to burn out its heating winding.

4. Lock out and reset

The unit can be reset or brought into lock out mode in two different ways:

Internal
In the lock out case the unit can be reset by pushing the built-in button meaning a new start-up cycle is performed.

External
Instead of using the built-in lock out button the same function can be achieved by using an external button which connects terminal 9 with A (see also circuit and block diagram).

If the pushputton (internal or external) is pressed during normal operation or during the start sequence for more then 3 sec. and afterwards released, the control box will perform a shutdown.

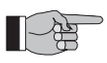

Please note
The unit can only be brought to lockout mode or be reseted if power is applied to the unit.

5. Low-voltage protection

The mains voltage has to be more than 187 V_{eff} in order to allow the unit to perform a start-up.
The mains voltage is not only monitored in the start-up phase but also permanently during operation. If the voltage drops below < 160 V_{eff} during start-up or run time the control box goes into lock out mode. If the voltage rises again, the control box performs automatically a start-up as soon as the mains voltage is > 187 V_{eff}.

6. Safety

The design and control sequence of the DKO 974/976 controls will comply with the currently applicable standards and regulations (see also TECHNICAL DATA).

7. Burner with an air damper motor

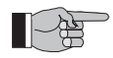

The position of the air damper during pre-purge has to be assured by suitable actions

8. Mounting and electrical wiring

Wiring base:
- 3 earth terminals with additional terminal for burner earthing
- 3 neutral terminals with internal permanent connection to neutral terminal 8
- 2 independant spare terminals (S1 and S2)
- extra terminals A, B and C are standard
- 2 slide-in plates and 2 easy knock out holes (PG11 thread) plus 2 knock out holes in the base bottom faciliate the base wiring

The digital controls are ideally wiried on the new wiring bases S98, which are equipped with (terminals B and C are only for some special types of DMO or DMG) terminal A,. which is used for the remote reset / remote lockout functions.

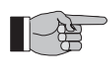

Please note
To assist trouble-free operation the main neutral connection terminal in the wiring base must be fully tightened. The terminal screws are already in the undone position. To connect a wire to the terminal, the screw only needs to be fastened.

General: The control box and detector probes should not be subjected to excessive vibration.

INSTALLATION INSTRUCTIONS AND MAINTENANCE

1. Important notes

- The controls must be installed by qualified personnel only. The relevant national regulations have to be observed.
- On commissioning the wiring has to be carefully check-ed according the appropriate diagram, Incorrect wiring can damage the unit and endanger the installation.
- The fuse rating has to ensure that the limits specified in TECHNICAL DATA will not be exceeded. If these precautions are not observed, the effect of a short circuit can cause severe damage to the control and installation.
- For safety reasons a minimum of one control shutdown per 24 hours has to be observed.
- Disconnect the mains before the control box is plugged in or out.
- The control box is a safety device and must not be opened!

2. Function control

For safety reasons the flame detection system should be tested on commissioning the installation as well as after a service or longer shut-down.

a) Start-up with covered flame detector
   – After lock out safety time is over the unit has to go into lock out mode!

b) Start-up with exposed flame detector
   – After 12 sec prepurge time the unit has to go into lock out mode!

c) Normal start-up with burner in the normal position, cover up the flame detector
   – After start-up, and end of lock out safety time the unit has to go into lock out mode!

3. Fault finding

The built-in information system facilitates the trouble shooting in the case of problems occurring during start-up or during operation.
A list of possible lock out messages can be found in APPLICATION FEATURES chapter 1.2.



Please note:
The control box is locked in lock out mode and the reasen for the lock out is displayed until the control box is reset, either by en internal or external reset (see also subject “3. Lock out and reset").

Removing the control box from its wiring base or by interrupting the supply line may not reset a lock out (according to EN 230). There fore, by applying power, the fan motor/ nozzle preheater switches on for 2-3 secs. before the control box goes to lock out again and the cause of the last lock out.

Error	Possible fault
Burner not working	- Thermostat circuit open - Faulty electrical wiring - Oil preheater defective - mains voltage < 187 V
Fan motor/nozzle preheater starts for a short period of time, control box goes to louk out	- Control box has not been reset
Burner starts, flame not established, lock out	- Stray light on flame detector - No ignition or no fuel
Burner starts, flame established, after safety time, lock out	- Dirty or faulty flame detector - Insufficient light on detector - Sensitivity adjustment too low on IRD

DMO 976

CIRCUIT AND TIMING DIAGRAM DMO 976 WITH AIR DAMPER MOTOR

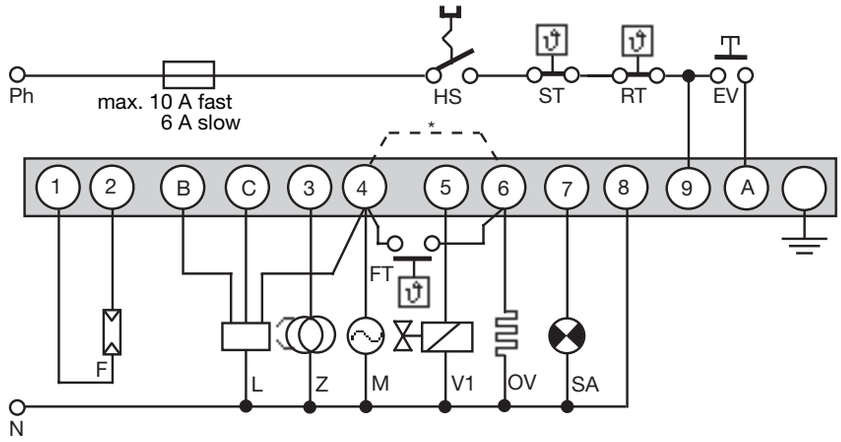

HS	Mains switch
ST	Limit thermostat
RT	Control thermostat
EV	External reset and lock out button
F	Flame detector MZ 770 S (IRD 1010, UVD 970 see separate diagram)
Z	Ignition
M	Burner motor
V1, V2	Oil solenoid valve
OV	Oil preheater
FT	Release thermostat oil preheater
*	For burners without fuel heaters term. 4 and 6 have to be connected with a link
SA	External lock out signal
L	Air damper motor
ta	Pre-heat-time oil preheater
tv1	Pre-purge and pre-ignition time
tlk	LK-open command during pre-purge
tr	LK-close movement
tf	stray light monitoring
ts	Lock out safety time
tn	Post-ignition time
tv2	Delay terminal 6

WITHOUT AIR DAMPER MOTOR

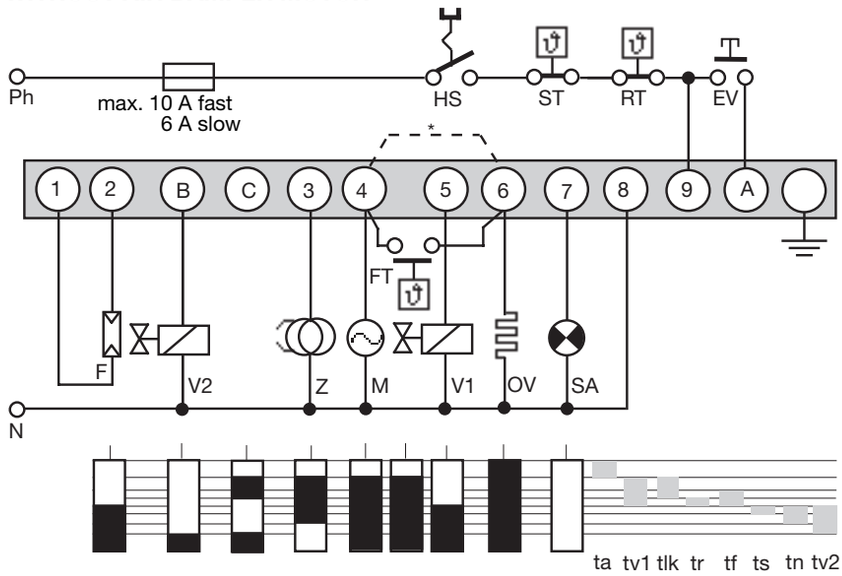

IRD-/UVD-CONNECTION

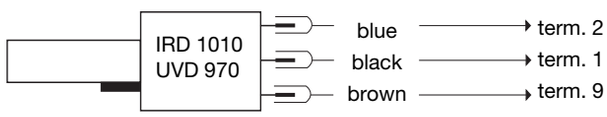

BLOCK DIAGRAM DMO 976

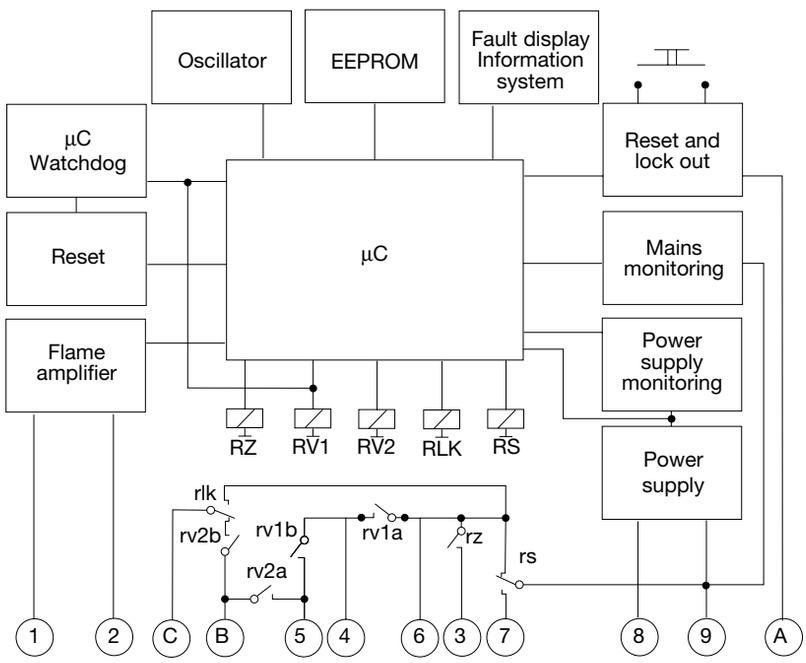

DMO 976

DKO 974/976 AND SOCKET

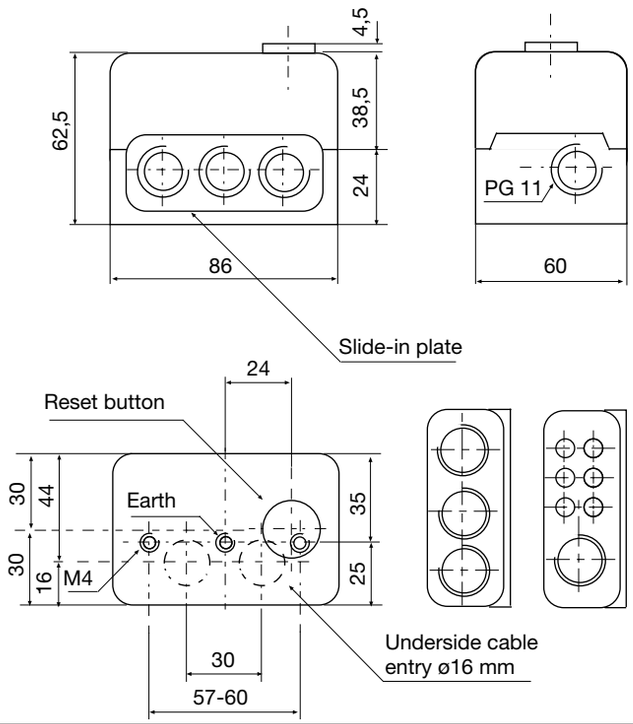

HOLDER FOR MZ 770 S

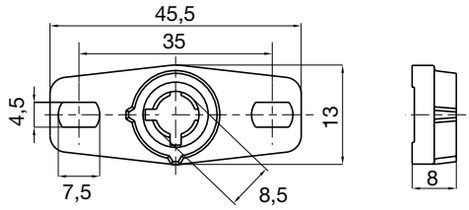

SHAFT MZ 770 S

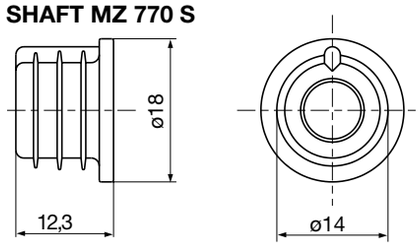

PHOTORESISTOR MZ 770 S

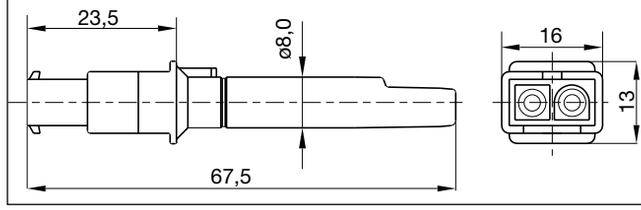

UVD 970

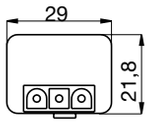

IRD 1010

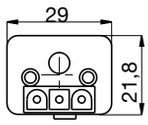

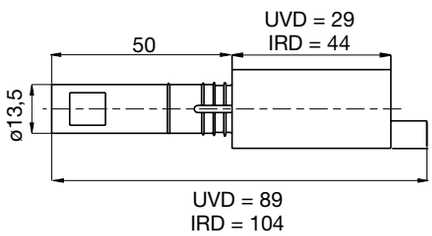

HOLDER M74 FOR IRD OR UVD

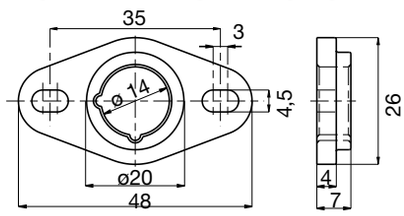

VARIATION IRD

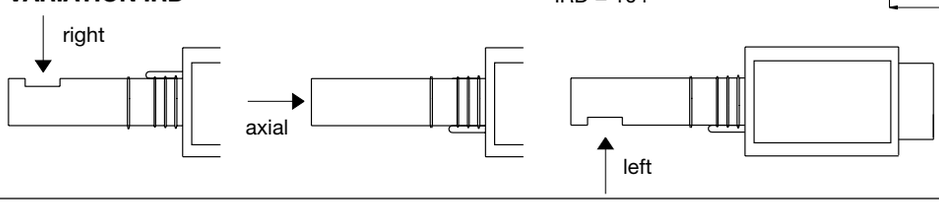

ORDERING INFORMATION

ITEM	DESIGNATION	ITEM NO.
Control box	DMO 976 Mod. 01	0346001
Socket	Wiring base S98	75310
Insert plate	PG-Plate	70502
optional	Cable entry plate	70501
Flame detector	MZ 770 S	50001
optional	MZ 770 S with shaft	51001
optional	IRD 1010 right	16501
	IRD 1010 end-on	16502
	IRD 1010 left	16503
optional	UVD 970	16702
Support for flame detector	Holder for MZ 770 S	59101
optional	Holder M 74 for IRD or UVD	59074
Connection cable	Plug type, 3 core cable, 0.6 m with tag wire ends	7236001
Connection cable	Plug type, 2 core cable, 0.5 m with tag wire ends	7225001

The above ordering information refers to the standard version.
Special versions are also included in our product range. Specifications subject to change without noticSocket

Satronic AG
Brüelstrasse 7
Postfach 324
CH-8157 Dielsdorf

Gas Burner Control Box

For 2-stage atmospheric gas burners

Possible flame detectors:
- Ionisation probe
- Infra-red flicker detector



INTRODUCTION

The TFI 812.2 gas burner control boxes are capable of controlling and monitoring atmospheric gas burners. They have been tested and approved as per DIN 4788 part 3 edition 04.89 and with the European standard EN 298. They are also suitable for use with stationary warm air generators (as per DIN 4794).
The control boxes are designed for maximum safety in case of fluctuations in the voltage supply. If the mains voltage drops below the permitted level, operation is interrupted and the control box automatically prevents the start sequence from being repeated. In this way, the safety of the system is not put at risk by a drop in the mains voltage.
The control box and the monitoring function which it performs is not negatively affected by occasional stray ignition sparks jumping to the ionisation electrode.
The FR 870 remote reset (item no. 70700) can be connected, and allows remote reset of the control box (see doc. no. 750).
The TFI 812 mod.5 can be installed in place of the TFI 712 F, and the TFI 812 mod.10 can be employed to replace the TFI 712.
It is not necessary to rewire or replace the baseplate. The difference in the heights of the units can be compensated by attaching the reset button extension (item no. 70601).
The difference between the TFI 812.1 and the TFI 812.2 is that the TFI 812.2 control boxes are equipped with the voltage drop fail-safe function. Otherwise, they are identical in terms of operation and possible applications.

CONSTRUCTIONAL FEATURES

The control box is well protected by a flame-resistant, transparent, plug-in type plastic housing which encloses the thermo-mechanical temperature-compensated timing unit, the flame monitoring unit and the reset device.
The reset button, which incorporates an indicator lamp, and the central screw fastening, are situated on the upper part of the control box.
The baseplate, which can be equipped with additional terminals, together with the various optional cable entry points, makes universal wiring possible.

TYPES AVAILABLE

TFI 812.2 mod. 5	Safety interval 5 sec. Pre-ignition time approx. 15 sec. appropriate nominal capacity according to the appliance standort or the gas appliance directive.
TFI 812.2 mod. 10	Safety interval 10 sec. Pre-ignition time approx. 10 sec. appropriate nominal capacity according to the appliance standort or the gas appliance directive.
TFI 812.2 B mod. 5	dito – without Pre-ignition time
TFI 812.2 B mod. 10	dito – without Pre-ignition time

TECHNICAL DATA

Supply voltage	220/240 V (-15...+10%) 50 Hz (40 - 60 Hz)
Fuse rating	10 A rapid or 6 A slow
Power consumption	5 VA
Max. current per output terminal	4 A
Max. current total	6 A
Pre-ignition time	15 or 10 sec.
Delay, post-ignition time	none
Safety interval	5 or 10 sec.
2nd stage delay	approx. 20 sec.
Reset delay after lockout	approx. 60 sec.
Permissible ambient temperature	-20° C to +60° C
Sensitivity	1.5 µA
Min. ionisation current required	2 - 3 µA
Ionisation probe insulation	probe - earth greater than 50 MΩ
Stray capacitance	probe - earth less than 1000 pF (max. 20 m cable)
Insulation standard	IP 44
Weight incl. baseplate	250 g
Mounting attitude	any

TECHNICAL FEATURES

1. Flame detection

The following types of flame detectors are suitable:
- Ionisation probe, temperature resistant material, well insulated (material and insulation same as for ignition electrode).
- IRD 1020 infra-red flicker detector (see doc. 746)

Flame detection using an ionisation probe is only possible in conjunction with mains supplies which provide a neutral earth connection.

2. Safety

In terms of design/construction and programme sequence, the TFI 812 control boxes conform to the presently applicable European standards and regulations.

3. Installation

At the baseplate:
- 3 earth terminals, with an additional tag for the burner earth.
- 3 neutral terminals, with a fixed, internal through connection to the neutral input, terminal 8.
- 2 independent terminals, which can be used as desired.
- 2 separate slide-in plates and 2 fixed, threaded knock-outs (PG 11 thread) as well as 2 knock-outs underneath, facilitate wiring of the baseplate.

General:
- Can be mounted in any position, insulated as per IP 44 standard (unaffected by water spray).
  The control box and detector probe should not, however, be subjected to excessive vibration.
- The applicable installation regulations must be observed during installation.

COMMISSIONING AND MAINTENANCE

1. Important notes

- The wiring must be checked exactly when commissioning the installation. Incorrect wiring could damage the control box, putting the safety of the burner system at risk.
- The chosen fuse rating must not, on any account, be higher than the value given in the technical data. Failure to observe this instruction could, in the case of a short circuit, have serious consequences for the control box or burner system.
- For safety reasons, it must be ensured that the control box performs at least one normal shut-down during every 24 hour period.
- Switch off or disconnect the power before plugging in or unplugging the unit.
- Burner control boxes are responsible for the safety of the system and should not be opened.

2. Routine checks

On commissioning or after servicing the burner system, or if the system has not been in operation for a long period, a check of the safety-relevant control box functions must be made.

a) Attempt to start with gas valve closed:
   - At the end of the safety interval
   -> Lockout

b) After a normal start, with the burner in operation, close the gas valve:
   - At the end of the safety interval, system attempts to restart
   -> Lockout

3. Possible faults

Burner does not start:
- Fault in electrical supply, thermostat OFF
- Mains voltage too low

Switches to lockout after attempted start without establishing flame:
- No ignition or no fuel reaching burner
- Flame signal during the pre-purge phase
- Mains voltage more than 15% below nominal value

Burner starts, flame is established but control box switches to lockout after elapse of safety interval:
- No flame signal or signal too weak
- Flame detector dirty or defective

WIRING AND SEQUENCE DIAGRAMS TFI 812.2

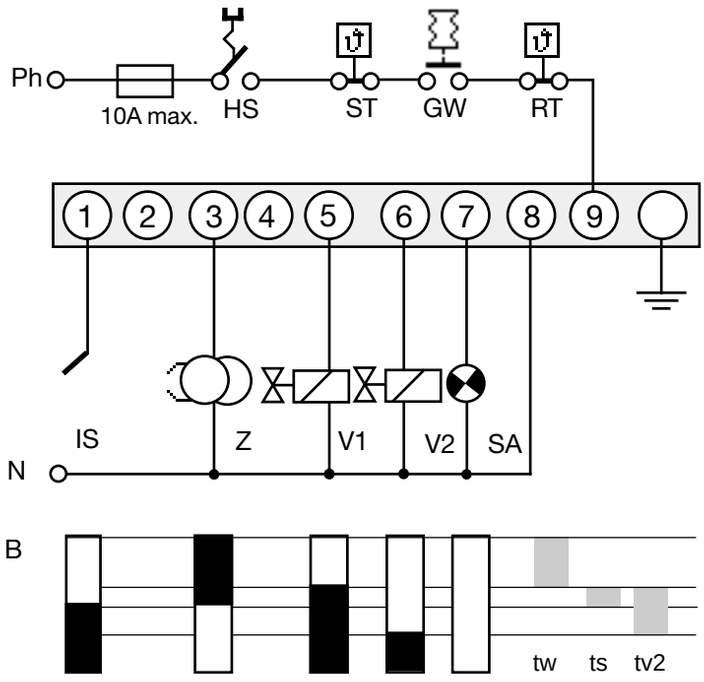

HS	Main switch
GW	Gas proving switch
ST	Safety thermostat
RT	Controlling thermostat
IS	Ionisation probe
Z	Ignition
V1	Solenoid valve, 1st stage
V2	Solenoid valve, 2nd stage
SA	remote lockout indicator
tw	Pre-ignition time approx. 15 sec. (mod. 5) approx. 10 sec. (mod. 10)
ts	Safety time 5 sec. (mod. 5) 10 sec. (mod. 10)
tv2	2nd stage delay approx. 20 sec.

IRD CONNECTION

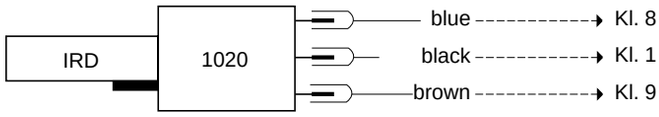

GENERAL CIRCUIT DIAGRAM TFI 812.2

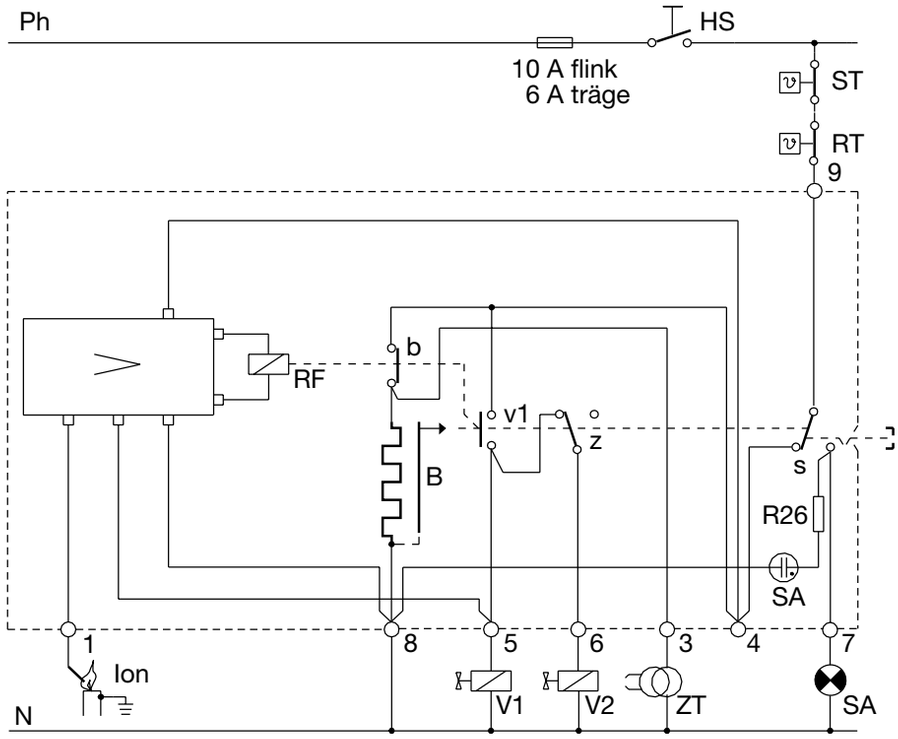

HS	Main switch	ST	Safety thermostat
RT	Controlling thermostat	RF	Flame relay
B	Thermal timing unit	V1	Valve1
R26	Resistor	V2	Valve 2
Ion	Ionisation probe	SA	Lockout indicator
ZT	Ignition	>	Amplifier IV7

DIMENSIONS WITH BASEPLATE TFI 812

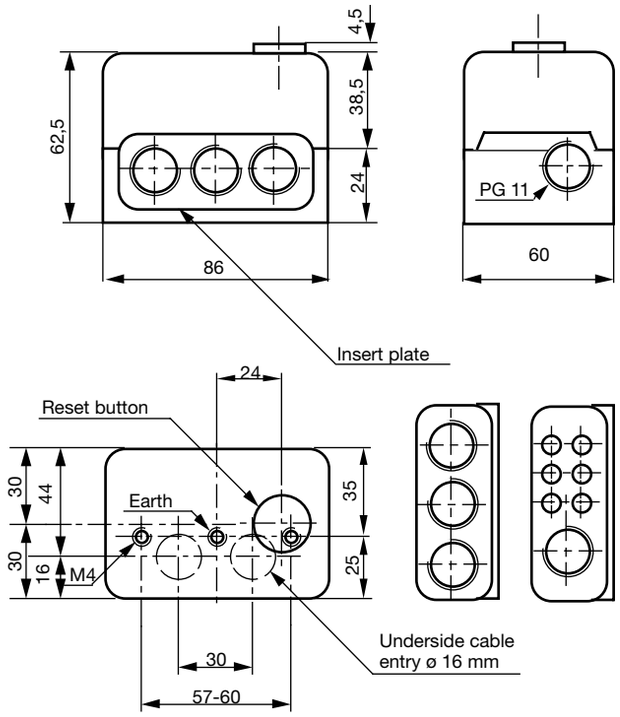

MEASUREMENT OF THE FLAME SIGNAL

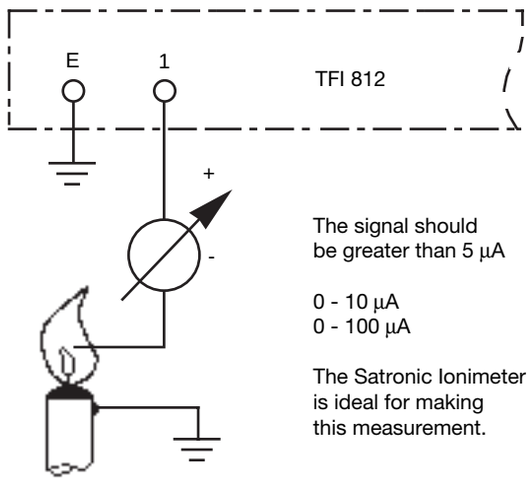

The signal should
be greater than 5 µA

0 - 10 µA
0 - 100 µA

The Satronic Ionimeter
is ideal for making
this measurement.

IRD 1020

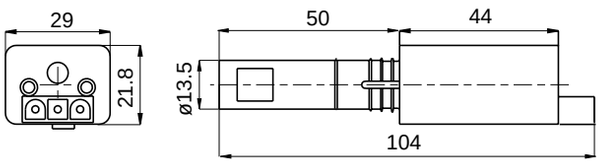

HOLDER M93

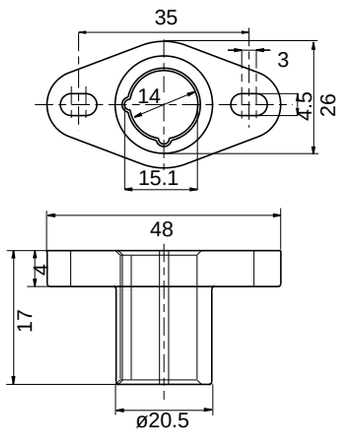

ORDERING INFORMATION

ITEM	DESIGNATION	ITEM NO.
Control box	TFI 812.2 mod. 5	02601
Control box	TFI 812.2 mod. 10	02602
Control box	TFI 812.2 B mod. 5	02607
Control box	TFI 812.2 B mod. 10	02608
Base	701 ABEN base	70001
Insert plate	PG plate	70502
optionally	Cable entry plate	70501
Flame detector	IRD 1020 end-on viewing	16522
Flame detector	IRD 1020 side-on left	16523
Flame detector	IRD 1020 side-on right	16521
IRD mounting flange	IRD Holder M93	59093
Flame detector cable	3-wire, 0.6 m	7236001

The above ordering information refers to the standard version.
Special versions are also included in our product range.

Specifications subject to change without notice.

Satronic AG
Brüelstrasse 7
Postfach 324
CH-8157 Dielsdorf

Gas burner automatic safety control

For 2-stage forced draught and combi oil/ gas burners

Possible flame detectors:
- Ionization probe
- Infrared flicker detector



INTRODUCTION

The gas burner automatic safety control MMI controls and monitors blown gas- and combined burners of any nominal thermal load (tested and certified according to EN 298).
The automatic safety controls MMI 810.1 models 13, 33 and 35 can also be utilized for burners on fixed hot air heaters (Direct air heaters according to DIN 4794).
Various types and model designations differentiate the automatic safety controls with respect to the programme times, as well as with regard to differing national standards.

TYPES AVAILABLE

MMI 810.1	Mod. 13 *	Art. Nr. 0620720
	Mod. 33	Art. Nr. 0620220
	Mod. 35	Art. Nr. 0620920
	Mod. 43	Art. Nr. 0622520
	Mod. 55	Art. Nr. 0621320
MMI 811.1	Mod. 35	Art. Nr. 0621120
	Mod. 63	Art. Nr. 0620420

* Must only be used on boilers or other applications where the 10 second pre-purge time is sufficient to provide at least 3 volume changes of the combustion chamber.

CONSTRUCTIONAL FEATURES

The automatic control is housed in a non-inflammable, transparent, plug-in type plastic case and contains:
- Synchronous motor with speed reducer gears as the drive for the switching cam
- Switching cam with informative programme display in colour
- 12 times cam drive for controlling the programme sequence
- Plug-in type circuit boards with the electronic components

The following important indicating - and operating elements are located on the front panel of the automatic control:
- Illuminated pushbutton for indication of malfunctions and reset
- Programme display in colour
- Screw for central mounting

TECHNICAL DATA

Operating voltage	220 / 240 V (-15... +10%) 50 Hz (50 - 60 Hz)
Differing frequency	Results in a proportional deviation of the time.
Rating fuse	max. 10 A rapid, 6 A slow
Power consumption	10 VA
Max. load per output:	
- term. 3	2A, cos φ 0.2
- term. 4, B	2A, cos φ 0.4
- term. 5, 6	1A, cos φ 0.4
total load	5A, cos φ 0.4
Amplifier sensitivity	1 µA
Minimum required Ionization current	5 µA
Flame detector cable	max. 20 m cable length
Air pressure monitor	working contact 4 A, 230 V
Waiting time for malfunction remedy	None
Flame detector	
- Ionization probe	
- Infrared flicker detector	IRD 1020
Weight, incl. base	350 g
Mounting position	any
Insulation standard	IP 44
Admissible ambient temperature for controller and flame detector	-20° C... +60° C
Classified acc. to EN 298	BTLLXN

program timings (sec.)		MMI 810.1					811.1	
Modell		13	33	35	43	55	35	63
Waiting time at start ca.	tw	6	9	9	9	9	9	6
Max. reaction time for air proving switch	tlw	3.5	6	6	6	17	6	5
Pre-purge time	tv1	3	24	24	40	20	24	55
Pre-ignition time	tvz	2	3	3	3	15	3	3
T. ignition time	tz	5	6	8	6	20	8	5.5
Safety time	ts	3	3	5	3	5	5	3
Time delay term.6/term.C	tv2	6	10	10	10	10	10	6

For external resetting, the remote reset device FR 870 (art. No. 70700) can be utilized. (Refer to doc. 750).

APPLICATION TECHNOLOGY FEATURES

1. Flame Monitoring

The flame monitoring can be effected with the following flame detectors:

- With ionization electrodes in power grids with earthed neutral conductor, utilizable with gas burners (interference effects of the ignition spark cannot influence the formation of the flame signal).
- With infrared flicker detector type IRD 1020 for all types of burners.

2. Burner Control

– The burner controls features a low-voltage protection. If the supply voltage dropps below 160 V during operation, the burner switches-off. When the supply voltage raises above 180 V, the burner performs a restart independently.
– The automatic burner controls MMI only operate, when a load is connected to terminal 5. If the fuel valve is interrupted by an external contact during the pre-purging phase, a resistance of max. 22 kW, 4 Watt has to be applied bet-ween the terminals 5 and 8.
– Functional test of the air pressure monitor before the startup and monitoring of the air pressure during the pre-purging time, as well as in the operating condition of the burner. For normal applications a working contact with a power rating of 4 A / 230 V is sufficient.
– In the case of the automatic control MMI 810.1, contacts can be installed between the terminals 1 and 9 (e.g., valve limit position contacts). These are checked for their correct closing position when the unit is started up. The connection 1 - 9 has to be closed during the starting phase of the automatic control.

3. Safety

With respect to design and programme sequence, the gas burner automatic safety controls of the MMI type range comply with the currently applicable European standards and regulations.

4. Mounting and Electrical Installation

On the base:

– 3 earth conductor terminals with additional strap for the earthing of the burner.
– 3 neutral conductor terminals with an internal, fixed connection to the neutral conductor input, terminal 8.
– 2 individual slide-in plates and 2 fixed knock-out apertures with thread PG 11, as well as 2 knock-out apertures from below, make the wiring of the base more easy.

General:

– Mounting position as required, insulation standard IP 44 (splash-proof). The automatic control and sensor should, however, not be exposed to excessive vibration.
– During mounting and installation, the applicable regulations for installation have to be observed.

COMMISSIONING AND SERVICE/MAINTENANCE

1. Important Remarks

– Before commissioning, the wiring has to be accurately checked. Faulty wiring can damage the unit and endanger the safety of the installation.
– The mains fuse has to be selected so that the limit values indicated under "Technical Specifications" are under no circumstances exceeded. Non-compliance with this regulation can have very serious consequences for the control unit and for the installation in the case of a short-circuit.
– For safety reasons, at least one control shut-down per 24 hours must be assured.
– The control unit must be plugged-in or -out only when the mains supply has been disconnected.
– Automatic burner safety controls are safety devices and must not be opened.

2. Functional Check

During commissioning and after an overhaul of the burner, the following checks have to be carried out:

a) Starting test with closed manual valve and bridged gas monitor contact:
   – The device must go into a fault condition after the safety period has elapsed.
b) Close the manual valve in operating position with the gas monitor contact bridged.
   – The device must go into a fault condition after a flame failure.
c) Air pressure monitor contact interrupted:
   – Device goes into a fault condition.
d) Bridge air pressure monitor contact before starting:
   – Device must not start.

3. Trouble Shooting

Burner does not go into operation, programme indication remains:

– Electrical connection defective.
– Thermostat or gas monitor "OFF".

Burner does not go into operation, programme indication rotates continuously:

– Air pressure monitor defective, respectively, not in starting position. (Working contact must be open).
– Connection term. 1 - term. 9 interrupted
– mains voltage < 180V

The automatic control switches to fault condition shortly after the start of the pre-purge time (line within the blue zone):

– Air pressure monitor contact does not close.
– No load on terminal 5.
– Flame signal.

Automatic control switches to fault condition during the pre-purging (blue zone):

– No flame formation (ignition missing, valve does not open, etc.)
– No flame signal or too weak flame signal (flame does not adhere, poor insulation of the flame detector, burner not properly connected to the earth conductor).

Automatic control switches to fault condition during the operating position (red, resp. green zone):

– Flame lift-off
– Air pressure monitor contact opens
– Flame signal too weak.

SCHEMATIC CONNECTION DIAGRAM AND PROCESS DIAGRAM MMI 810.1

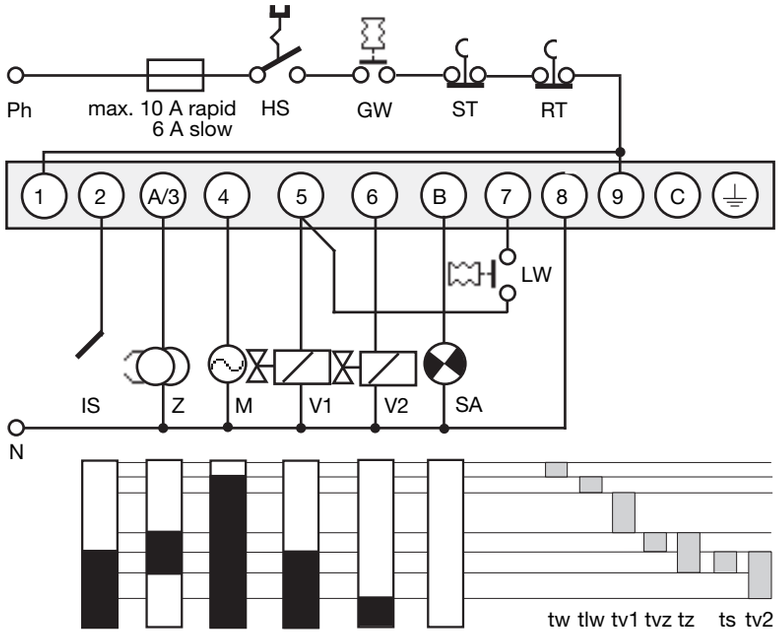

SCHEMATIC CONNECTION DIAGRAM AND PROCESS DIAGRAM MMI 811.1

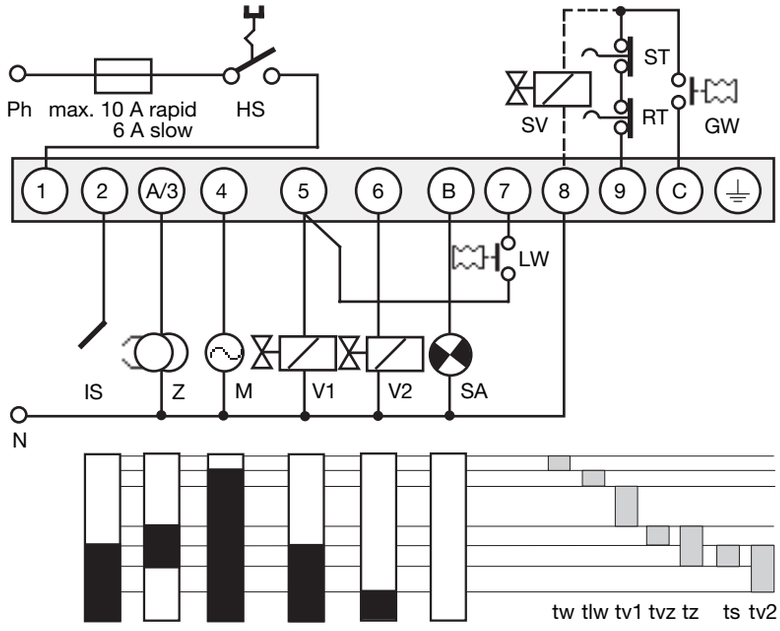

HS	Main switch
GW	Gas pressure switch
ST	Limit thermostat
RT	Control thermostat
IS	Ionization probe
Z	Ignition
M	Burner motor
V1	Solenoid valve 1st stage
V2	Solenoid valve 2nd stage
LW	Air pressure monitor
SA	External fault indication
SV	Safety valve
tw	Waiting time at start-up
tlw	Max. reaction time for air proving switch
tv1	Pre-purge time
tvz	Pre-ignition time
tz	Total ignition time
ts	Safety time
tv2	Time delay term.6 / term.C

IRD CONNECTION

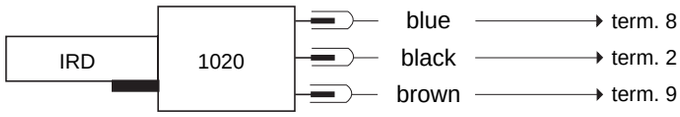

SCHEMATIC DIAGRAM MMI 810.1

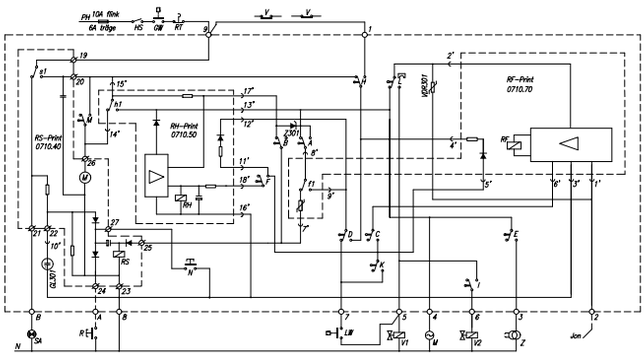

SCHEMATIC DIAGRAM MMI 811.1

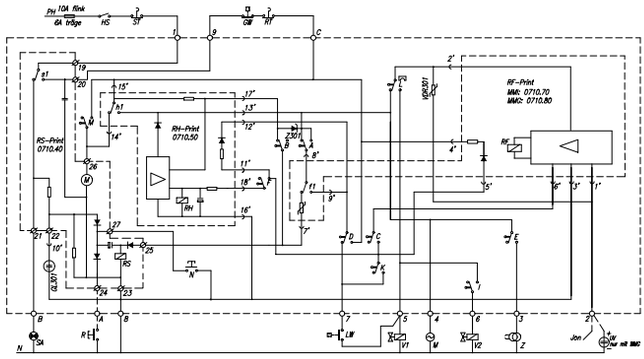

MMI WITH BASE

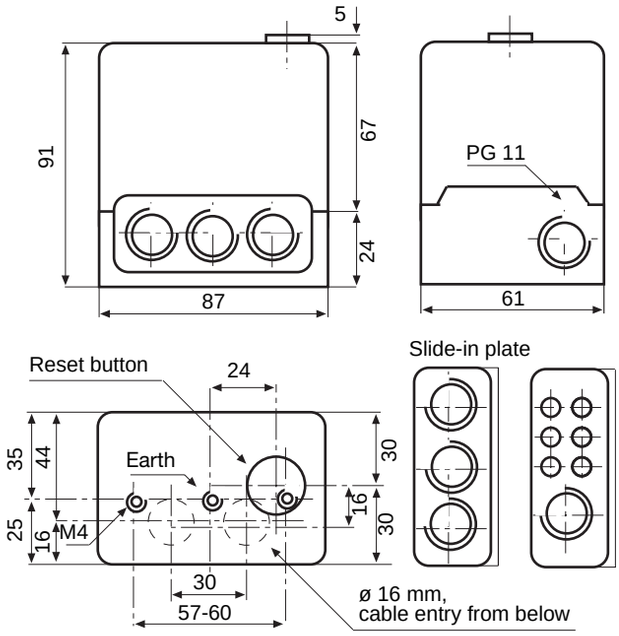

MEASUREMENT OF THE FLAME SIGNAL

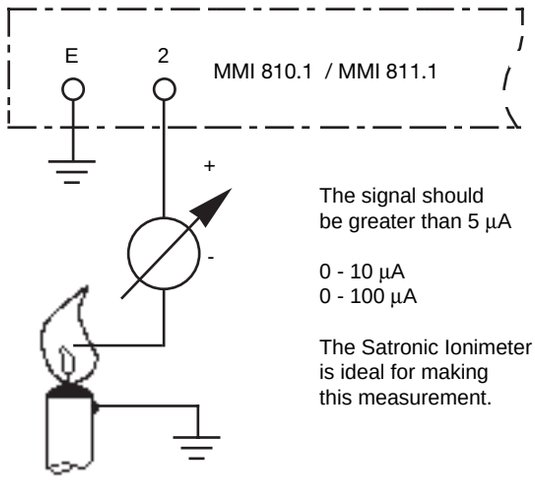

The signal should be greater than 5 µA

0 - 10 µA
0 - 100 µA

The Satronic Ionimeter is ideal for making this measurement.

IRD 1020

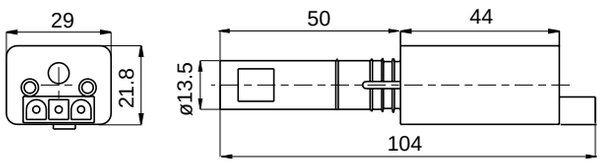

HOLDER M93

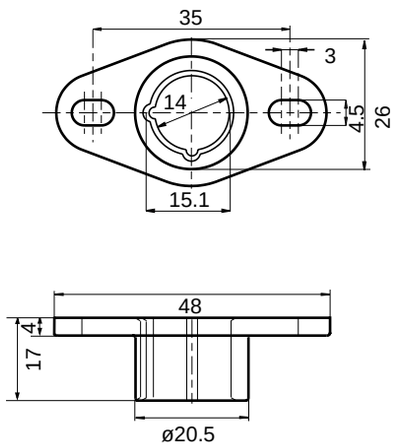

ORDERING INFORMATION

ITEM	DESIGNATION	ITEM NO.
Control unit	Type MMI 810.1 mod. 33	0620220
or	Type MMI 811.1 mod. 35	0621120
Base for MMI 810.1	Base 701 TTG-EN	70101
Base for MMI 811.1	Base 710 TTG-FN	70102
Slide-in plate	PG-plate	70502
optionally	Cable clamping plate	70501
Flame detector	IRD 1020 end-on viewing	16522
Flame detector	IRD 1020 side-on left	16523
Flame detector	IRD 1020 side-on right	16521
IRD mounting flange	IRD Holder M93	59093
Flame detector cable	3-wire, 0.6 m	7236001

The above ordering information refers to the standard version.
Special versions are also included in our product range.

Specifications subject to change without notice.

Satronic AG
Brüelstrasse 7
Postfach 324
CH-8157 Dielsdorf

Gas burner automatic safety control

For 2-stage forced draught gas burners
Facility to connect an air damper unit

Possible flame detectors:
- Ionization probe
- Infrared flicker detector



INTRODUCTION

The gas burner automatic safety control MMI 812 controls and monitors blown gas- and combined burners of any nominal thermal load (tested and certified according to EN 298).
If an air damper unit is connected, a 2-stage operation with two fuel valves or a modulating operation with one fuel valve is possible.
Various types and model designations differentiate the automatic safety controls with respect to the programme times, as well as with regard to differing national standards.

TYPES AVAILABLE

MMI 812.1	Modell 23	Art. Nr. 06223
MMI 812	Modell 33	Art. Nr. 06205

CONSTRUCTIONAL FEATURES

The automatic control is housed in a non-inflammable, transparent, plug-in type plastic case and contains:
- Synchronous motor with speed reducer gears as the drive for the switching cam
- Switching cam with informative programme display in colour
- 10 times cam drive for controlling the programme sequence
- Plug-in type circuit boards with the electronic components

The following important indicating - and operating elements are located on the front panel of the automatic control:
- Illuminated pushbutton for indication of malfunctions and reset
- Programme display in colour
- Screw for central mounting

TECHNICAL DATA

Operating voltage	220 / 240 V (-15... +10%) 50 Hz (40 - 60 Hz)
Differing frequency	Results in a proportional deviation of the time.
Rating fuse	max. 10 A rapid, 6 A slow
Power consumption	10 VA
Max. load per output	4 A
Overall	6 A
Amplifier sensitivity	1 µA
Minimum required Ionization current	5 µA
Flame detector cable	max. 20 m cable length
Air pressure monitor	1 working contact 4 A, 230 V
Waiting time for malfunction remedy	None
Flame detector - Ionization probe - Infrared flicker detector	 IRD 1020
Weight, incl. base	350 g
Mounting position	Any
Insulation standard	IP 44
Admissible ambient temperature for controller and flame detector	-20° C... +60° C
Classified acc. to EN 298	BTLLXN

program timings (sec.)		MMI 812.1	MMI 812
Modell		23	33
Waiting time at start-up	tw	8	5
Max. reaction time for air proving switch	tlw	15	18
Pre-purge time	tv1	30	42
LK open signal	tlk	36	49
Pre-ignition time	tvz	3	3
Total ignition time	tz	5.5	5.5
Safety time	ts	3	3
Time delay term.6 / term.C	tv2	6	6

For external resetting, the remote reset device FR 870 (art. No. 70700) can be utilized. (Refer to doc. 750).

APPLICATION TECHNOLOGY FEATURES

1. Flame Monitoring

The flame monitoring can be effected with the following flame detectors:
- With ionization electrodes in power grids with earthed neutral conductor, utilizable with gas burners (interference effects of the ignition spark cannot influence the formation of the flame signal).
- With infrared flicker detector type IRD 1020 for all types of burners.

2. Burner Control

- The automatic burner controls MMI only operate, when a load is connected to terminal 5. If the fuel valve is interrupted by an external contact during the pre-purging phase, a resistance of max. 22 kΩ, 4 Watt has to be applied between the terminals 5 and 8.
- Functional test of the air pressure monitor before the startup and monitoring of the air pressure during the pre-purging time, as well as in the operating condition of the burner. For normal applications a working contact with a power rating of 4 A / 230 V is sufficient.
- In the case of the automatic control MMI 810, contacts can be installed between the terminals 1 and 9 (e.g., valve limit position contacts). These are checked for their correct closing position when the unit is started up. The connection 1 - 9 has to be closed during the starting phase of the automatic control.
- No fuel valve must be connected to terminal 6.

3. Safety

With respect to design and programme sequence, the gas burner automatic safety controls of the MMI type range comply with the currently applicable European standards and regulations.

4. Mounting and Electrical Installation

On the base:
- 3 earth conductor terminals with additional strap for the earthing of the burner.
- 3 neutral conductor terminals with an internal, fixed connection to the neutral conductor input, terminal 8.
- 2 individual slide-in plates and 2 fixed knock-out apertures with thread PG 11, as well as 2 knock-out apertures from below, make the wiring of the base more easy.

General:
- Mounting position as required, insulation standard IP 44 (splash-proof). The automatic control and sensor should, however, not be exposed to excessive vibration.
- During mounting and installation, the applicable regulations for installation have to be observed.

COMMISSIONING AND SERVICE/MAINTENANCE

1. Important Remarks

- Before commissioning, the wiring has to be accurately checked. Faulty wiring can damage the unit and endanger the safety of the installation.
- The mains fuse has to be selected so that the limit values indicated under "Technical Specifications" are under no circumstances exceeded. Non-compliance with this regulation can have very serious consequences for the control unit and for the installation in the case of a short-circuit.
- For safety reasons, at least one control shut-down per 24 hours must be assured.
- The control unit must be plugged-in or -out only when the mains supply has been disconnected.
- Automatic burner safety controls are safety devices and must not be opened.

2. Functional Check

During commissioning and after an overhaul of the burner, the following checks have to be carried out:

a) Starting test with closed manual valve and bridged gas monitor contact:
   -The device must go into a fault condition after the safety period has elapsed.

b) Close the manual valve in operating position with the gas monitor contact bridged.
   -The device must go into a fault condition after a flame failure.

c) Air pressure monitor contact interrupted:
   -Device goes into a fault condition.

d) Bridge air pressure monitor contact before starting:
   -Device must not start.

3. Trouble Shooting

Burner does not go into operation, programme indication remains:
- Electrical connection defective.
- Thermostat or gas monitor "OFF".

Burner does not go into operation, programme indication rotates continuously:
- Air pressure monitor defective, respectively, not in starting position. (Working contact must be open).

The automatic control switches to fault condition shortly after the start of the pre-purge time (line within the blue zone):
- Air pressure monitor contact does not close.
- No load on terminal 5.
- Flame signal.

Automatic control switches to fault condition during the pre-purging (blue zone):
- No flame formation (ignition missing, valve does not open, etc.)
- No flame signal or too weak flame signal (flame does not adhere, poor insulation of the flame detector, burner not properly connected to the earth conductor).

Automatic control switches to fault condition during the operating position (red, resp. green zone):
- Flame lift-off
- Air pressure monitor contact opens
- Flame signal too weak.

SCHEMATIC CONNECTION DIAGRAM AND PROCESS DIAGRAM MMI 812

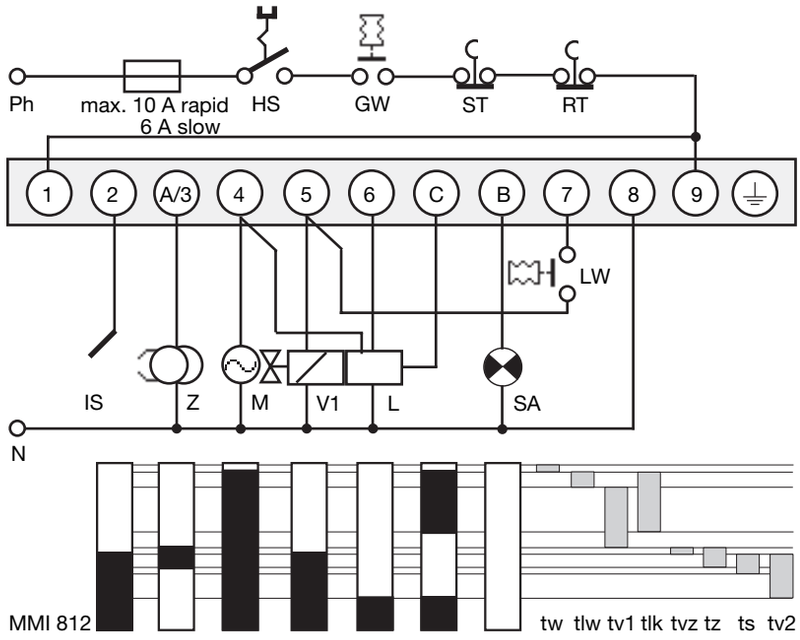

HS	Main switch
GW	Gas pressure switch
ST	Limit thermostat
RT	Control thermostat
IS	Ionization probe
Z	Ignition
M	Burner motor
V1	Solenoid valve 1st stage
L	Air damper unit
LW	Air pressure monitor
SA	External fault indication
tw	Waiting time at start-up
tlw	Max. reaction time for air proving switch
tv1	Pre-purge time
tlk	LK open signal
tvz	Pre-ignition time
tz	Total ignition time
ts	Safety time
tv2	Time delay term.6 / term.C

IRD CONNECTION

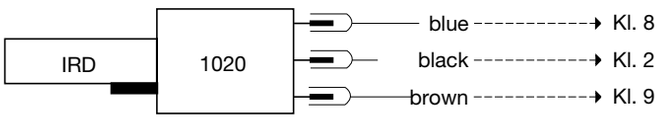

SCHEMATIC DIAGRAM MMI 812

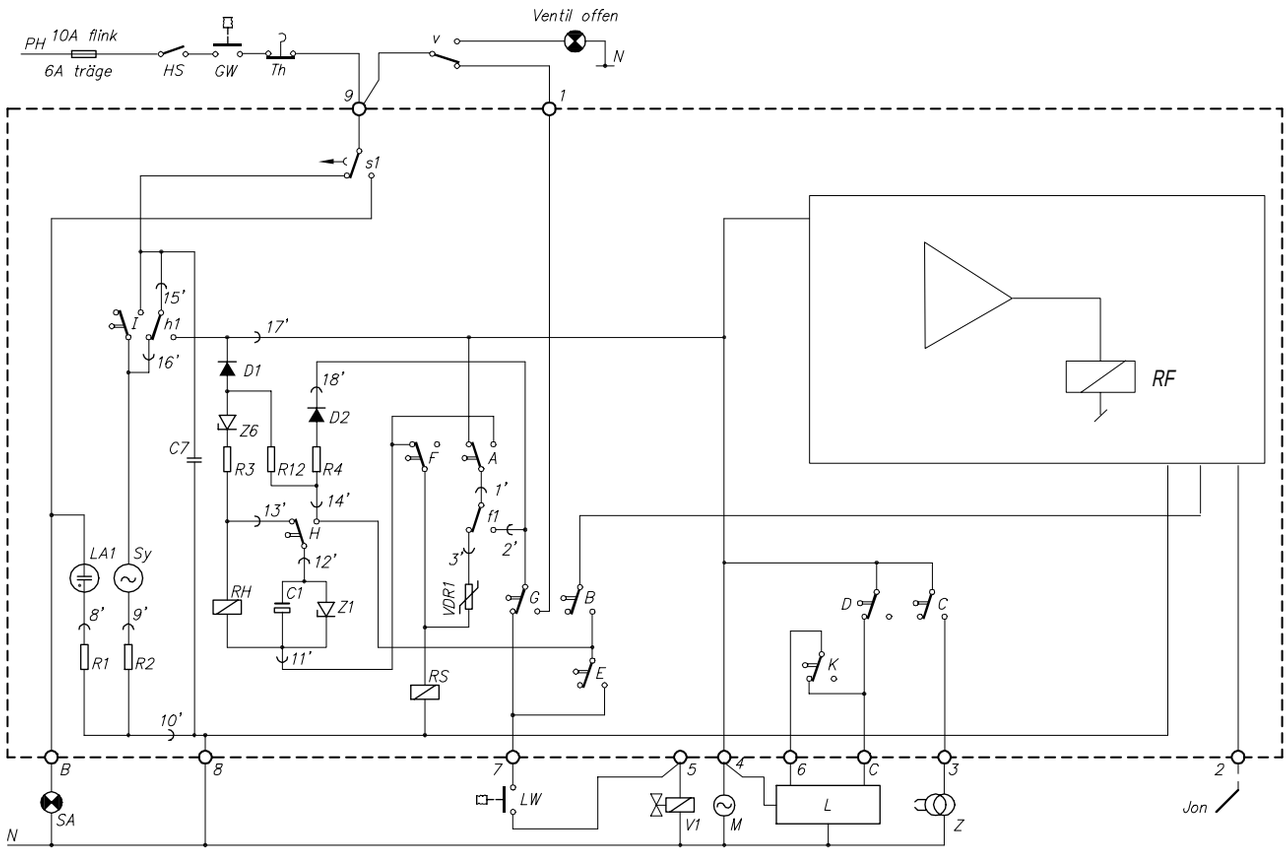

MMI WITH BASE

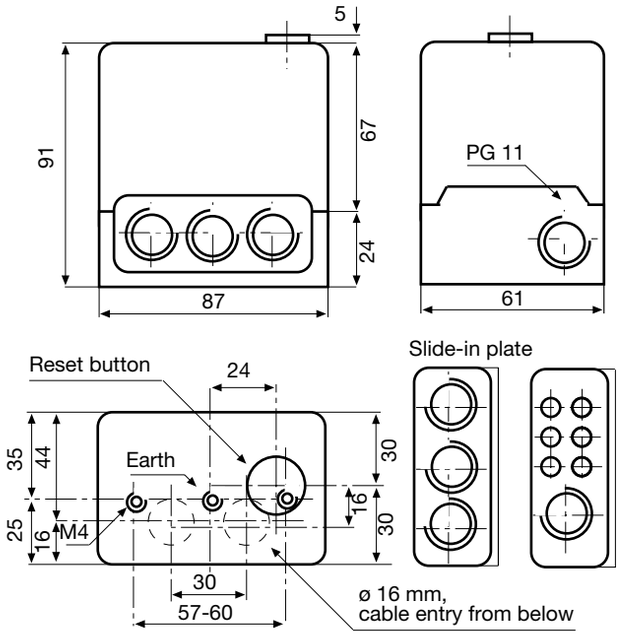

MEASUREMENT OF THE FLAME SIGNAL

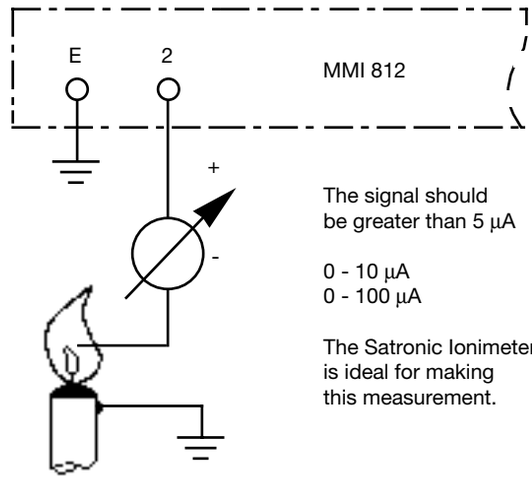

The signal should be greater than 5 µA

0 - 10 µA
0 - 100 µA

The Satronic Ionimeter is ideal for making this measurement.

IRD 1020

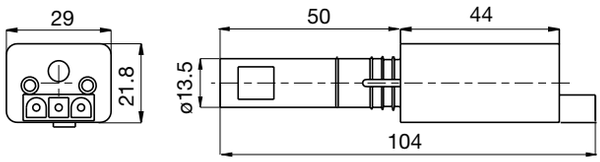

HOLDER M93

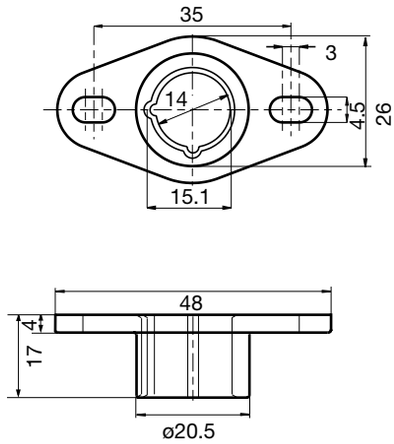

ORDERING INFORMATION

ITEM	DESIGNATION	ITEM NO.
Control unit	Type MMI 812.1 mod. 23	06223
or	Type MMI 812 mod. 33	06205
Base for MMI 811	Base 710 TTG-FN	70102
Slide-in plate	PG-plate	70502
optionally	Cable clamping plate	70501
Flame detector	IRD 1020 end-on viewing	16522
Flame detector	IRD 1020 side-on left	16523
Flame detector	IRD 1020 side-on right	16521
IRD mounting flange	IRD Holder M93	59093
Flame detector cable	3-wire, 0.6 m	7236001

The above ordering information refers to the standard version.
Special versions are also included in our product range.

Specifications subject to change without notice.

Satronic AG
Brüelstrasse 7
Postfach 324
CH-8157 Dielsdorf

Gas burner automatic safety control

For 2-stage forced draught gas burners
Designated for an air damper control

Possible flame detectors:
- Ionization probe
- Infrared flicker detector



INTRODUCTION

The gas burner automatic safety control MMI 813.1 controls and monitors blown gas- and combined burners of any nominal thermal load (tested and certified according to EN 298).
Together with an air damper motor, a 2-stage burner with 2 fuel valves, a 2-stage operation with 1 fuel valve or a modulating system ave possible.

CONSTRUCTIONAL FEATURES

The automatic control is housed in a non-inflammable, transparent, plug-in type plastic case and contains:
- Synchronous motor with speed reducer gears as the drive for the switching cam
- Switching cam with informative programme display in colour
- 12 times cam drive for controlling the programme sequence
- Plug-in type circuit boards with the electronic components

The following important indicating - and operating elements are located on the front panel of the automatic control:
- Illuminated pushbutton for indication of malfunctions and reset
- Programme display in colour
- Screw for central mounting

TECHNICAL DATA

Operating voltage	220 / 240 V (-15... +10%)
	50 Hz (50 - 60 Hz)
Differing frequency	results in a proportional deviation of the time.
Rating fuse	max. 10 A rapid, 6 A slow
Power consumption	10 VA
Max. current per output	
term. 3	2A, cos φ 0.2
term. 4, B	2A, cos φ 0.4
term. 5, 6, C	1A, cos φ 0.4
Total load	5A, cos φ 0.4
Amplifier sensitivity	1 µA
Minimum required Ionization current	5 µA
Flame detector cable	max. 20 m cable length
Air pressure monitor	1 working contact 4 A, 220 V
Waiting time for malfunction remedy	none
Running time air damper for 90°	max. 15 sec.
Flame detector	
- Ionization probe	
- Infrared flicker detector	IRD 1020
Weight, incl. base	350 g
Mounting position	any
Insulation standard	IP 44
Admissible ambient temperature for controller and flame detector	-20° C... +60° C
Classification acc. EN 298	BTLLXN

Automatic Control		MMI 813.1
Model		23
Waiting time at start approx.	tw	9
Maximum reaction time of air pressure monitor	tlw	10
Pre-purge time	tv1	34
Air damper open signal during pre-purge	tlk	36.5
Pre-ignition time	tvz	3
Ignition time, overall	tz	6
Ignition safety time	ts	3
Delay time terminal 6	tv2	6

For external resetting, the remote reset device FR 870 (art. No. 70700) can be utilized. (Refer to documentation 750).

APPLICATION TECHNOLOGY FEATURES

1. Flame Monitoring

The flame monitoring can be effected with the following flame detectors:

- With ionization electrodes in power grids with earthed neutral conductor, utilizable with gas burners (interference effects of the ignition spark cannot influence the formation of the flame signal).
- With infrared flicker detector type IRD 1020 for all types of burners.

2. Burner Control

- The burner controls features a low-voltage protection. If the supply voltage dropps below 160 V during operation, the burner switches-off. When the supply voltage raises above 180 V, the burner performs a restart independently.
- The automatic burner controls MMI only operate, when a load is connected to terminal 5. If the fuel valve is interrupted by an external contact during the pre-purging phase, a resistance of max. 22 kW, 4 Watt has to be applied bet-ween the terminals 5 and 8.
- Functional test of the air pressure monitor before the startup and monitoring of the air pressure during the pre-purging time, as well as in the operating condition of the burner. For normal applications a working contact with a power rating of 4 A / 220 V is sufficient.
- In the case of the automatic control MMI 813.1, contacts can be installed between the terminals 1 and 9 (e.g., valve limit position contacts). These are checked for their correct closing position when the unit is started up. The connection 1-9 has to be closed during the starting phase of the automatic control.

3. Safety

With respect to design and programme sequence, the gas burner automatic safety controls of the MMI type range comply with the currently applicable European standards and regulations.

4. Mounting and Electrical Installation

Wiring base:

- 3 earth terminals with additional terminal for burner earthing
- 3 neutral terminals with internal permanent connection to neutral terminal 8
- 2 independant spare terminals (S1 and S2)
- extra terminals A, B and C are standard
- 2 slide-in plates and 2 easy knock out holes (PG11 thread) plus 2 knock out holes in the base bottom faciliate the base wiring

General:

- Mounting position as required, insulation standard IP 44 (splash-proof). The automatic control and sensor should, however, not be exposed to excessive vibration.
- During mounting and installation, the applicable regulations for installation have to be observed.

COMMISSIONING AND SERVICE/MAINTENANCE

1. Important Remarks

- Before commissioning, the wiring has to be accurately checked. Faulty wiring can damage the unit and endanger the safety of the installation.
- The mains fuse has to be selected so that the limit values indicated under "Technical Specifications" are under no circumstances exceeded. Non-compliance with this regulation can have very serious consequences for the control unit and for the installation in the case of a short-circuit.
- For safety reasons, at least one control shut-down per 24 hours must be assured.
- The control unit must be plugged-in or -out only when the mains supply has been disconnected.
- Automatic burner safety controls are safety devices and must not be opened.

2. Functional Check

During commissioning and after an overhaul of the burner, the following checks have to be carried out:

a) Starting test with closed manual valve and bridged gas monitor contact:
   - The device must go into a fault condition after the safety period has elapsed.

b) Close the manual valve in operating position with the gas monitor contact bridged.
   - The device must go into a fault condition after a flame failure.

c) Air pressure monitor contact interrupted:
   - Device goes into a fault condition.

d) Bridge air pressure monitor contact before starting:
   - Device must not start.

3. Trouble Shooting

Burner does not go into operation, programme indication remains:

- Electrical connection defective
- Thermostat or gas monitor "OFF"

Burner does not go into operation, programme indication rotates continuously:

- Air pressure monitor defective, respectively, not in starting position. (Working contact must be open).
- Connection term. 1 - term. 9 interrupted
- mains voltage < 180V

The automatic control switches to fault condition shortly after the start of the pre-purge time (line within the blue zone):

- Air pressure monitor contact does not close
- No load on terminal 5
- Flame signal

Automatic control switches to fault condition during the pre-purge (blue zone):

- Air pressure monitor contact open
- Flame signal (stray light)

Automatic control switches to fault condition during the safety time (yellow zone):

- No flame formation (ignition missing, valve does not open, etc.)
- No flame signal or too weak flame signal (flame does not adhere, poor insulation of the flame detector, burner not properly connected to the earth conductor).

Automatic control switches to fault condition during the operating position (red, resp. green zone):

- Flame lift-off
- Air pressure monitor contact opens
- Flame signal too weak.

SCHEMATIC CONNECTION DIAGRAM AND PROCESS DIAGRAM MMI 813.1 WITH AIR DAMPER CONTROL

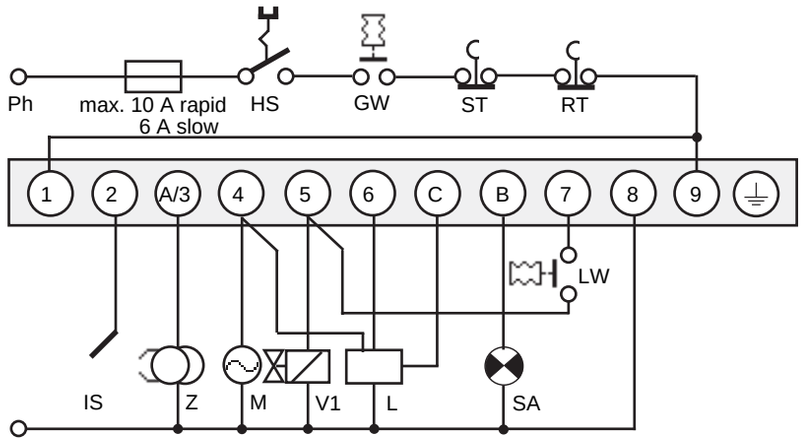

WITHOUT AIR DAMPER CONTROL

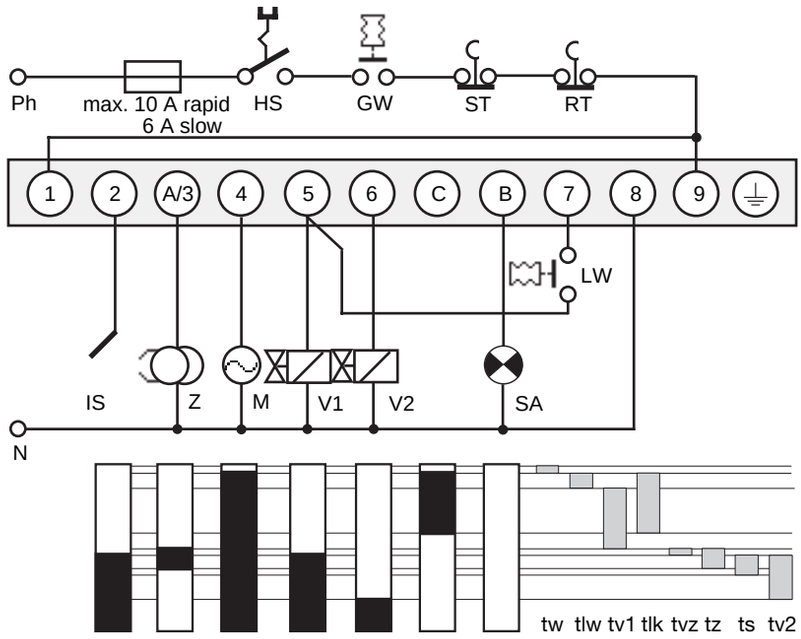

HS	Main switch
GW	Gas pressure switch
ST	Limit thermostat
RT	Control thermostat
IS	Ionization probe
Z	Ignition
M	Burner motor
V1	Solenoid valve 1st stage
V2	Solenoid valve 2nd stage
L	Air damper control unit
LW	Air pressure monitor
SA	External fault indication
tw	Waiting time at start-up
tlw	max. reaction time of air pressure monitor
tv1	Pre-purge period
tlk	Air damper open signal during pre-purge
tvz	Pre-ignition period
tz	Overall ignition period
ts	Safety period
tv2	Time delay terminal 6

IRD CONNECTION

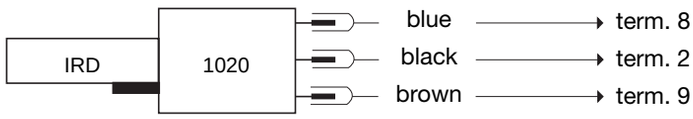

SCHEMATIC DIAGRAM MMI 813.1

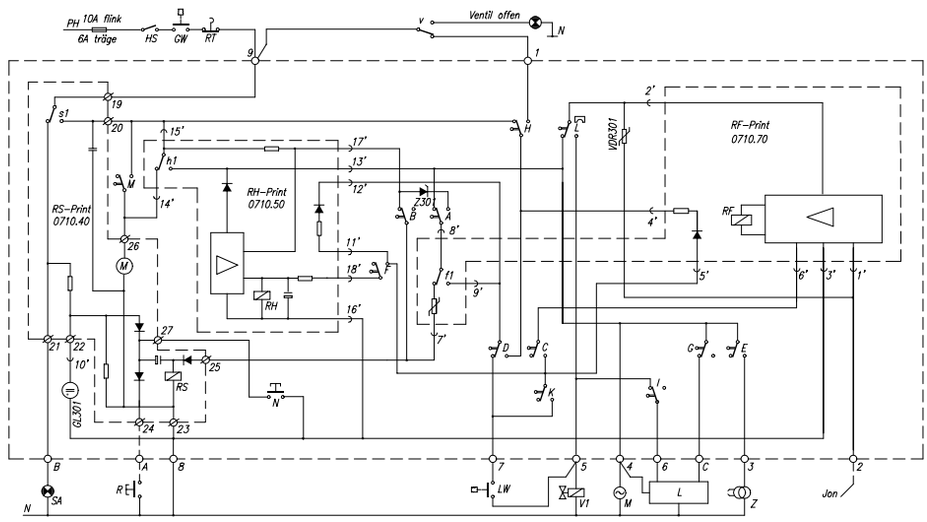

MMI 813.1

MMI WITH BASE

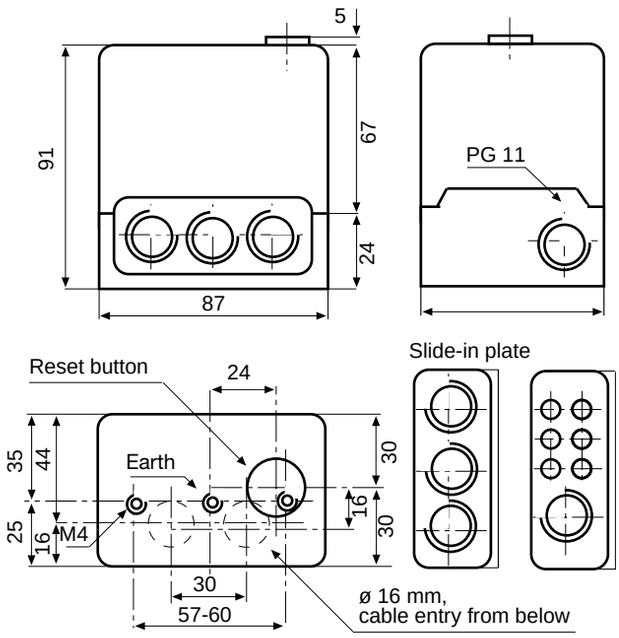

MEASUREMENT OF THE FLAME SIGNAL

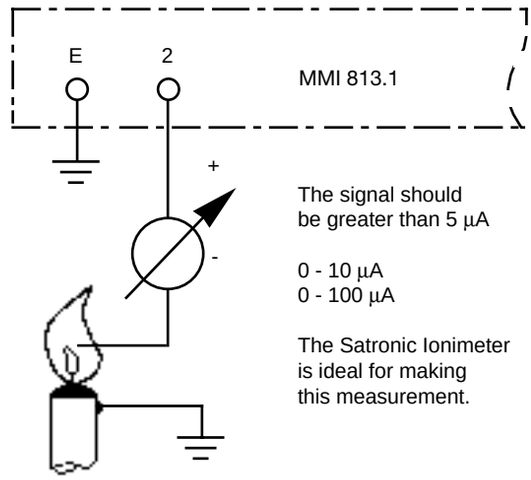

The signal should
be greater than 5 µA

0 - 10 µA
0 - 100 µA

The Satronic Ionimeter
is ideal for making
this measurement.

IRD 1020

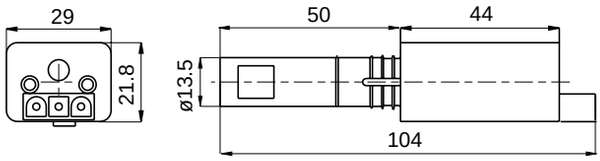

HOLDER M93

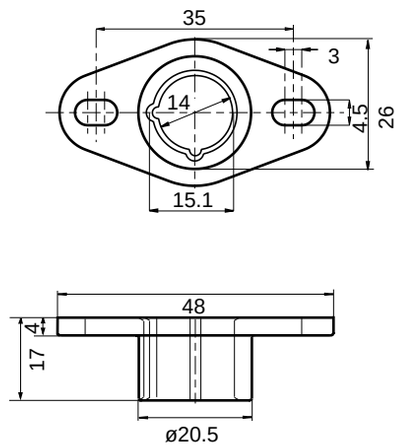

ORDERING INFORMATION

ITEM	DESIGNATION	ITEM NO.
Control unit	Type MMI 813.1 mod. 23	0622220
Base for MMI 813.1 (without air damper)	Wiring base 701 TTG-EN	70101
Base for MMI 813.1 (with air damper)	Wiring base S 98	75310
Slide-in plate	PG-plate	70502
optionally	Cable clamping plate	70501
Flame detector	IRD 1020 end-on viewing	16522
Flame detector	IRD 1020 side-on left	16523
Flame detector	IRD 1020 side-on right	16521
IRD mounting flange	IRD Holder M93	59093
Flame detector cable	3-wire, 0.6 m	7236001

The above ordering information refers to the standard version.
Special versions are also included in our product range.

Specifications subject to change without notice.

Satronic AG
Brüelstrasse 7
Postfach 324
CH-8157 Dielsdorf

Gasfeuerungsautomat

**Für atmosphärische Gasbrenner
bis max. 350 kW Nennleistung 2-stufig**

Mögliche Flammenfühler:
- Ionisationssonde
- Infrarot-Flackerdetektor



ANWENDUNGSBEREICH

Der Gasfeuerungsautomat MMI 815 steuert und überwacht atmosphärische Gasbrenner.

AUFBAU UND KONSTRUKTION

Die Automatik ist gut geschützt in einem schwer entflammbaren, transparenten und steckbaren Kunststoffgehäuse eingebaut und beinhaltet:
- Synchronmotor mit Untersetzungsgetriebe als Schaltwalzenantrieb
- Schaltwalze mit informativer, farbiger Programmanzeige
- 10-fach Nockenschaltwerk zur Steuerung des Programmablaufs
- Steckbare Printplatten mit den elektronischen Komponenten

Folgende wichtige Anzeige- und Bedienungselemente sind auf der Frontseite des Automaten zusammengefasst:
- Leuchttaste für Störanzeige und Entriegelung
- Farbige Programmanzeige
- Schraube zur Zentralbefestigung

TECHNISCHE DATEN

Betriebsspannung	220 / 240 V (-15... +10%) 50 Hz (40 - 60 Hz)
Abweichende Frequenz	ergibt proportionale Abweichung der Zeit
Vorsicherung	max. 10 A flink, 6 A träge
Eigenverbrauch	10 VA
Max. Belastung pro Ausgang	4 A
Total	6 A
Empfindlichkeit Verstärker	1 µA
Min. erforderlicher Ionisationsstrom	5 µA
Leitung Flammenfühler	max. 20 m Kabellänge
Wartezeit für Entstörung	keine
Flammenfühler	
- Ionisationssonde	
- Infrarot-Flackerdetektor	IRD 1020
Gewicht inkl. Sockel	350 g
Einbaulage	beliebig
Schutzart	IP 44
Zugelassene Umgebungstemperatur für	
Gerät und Flammenfühler	-20° C… +60° C

Automat	MMI 815	
Modell	5	10
Wartezeit Start ca.	17	17
Vorspülzeit	-	-
Vorzündzeit	4	4
Zündzeit total	8	13
Sicherheitszeit	5	<9
Verzög. 2. Stufe	15	15

Zur externen Entriegelung kann die Fernrückstellung FR 870 (Art. Nr.70700) eingesetzt werden.

ANWENDUNGSTECHNISCHE MERKMALE

1. Flammenüberwachung

Die Flammenüberwachung kann mit folgenden Flammenfühlern erfolgen:
- Mit Ionisationselektrode in Netzen mit geerdetem Nulleiter, anwendbar bei Gasbrennern (Störeinflüsse des Zündfunkens können die Bildung des Flammensignals nicht beeinflussen)
- Mit Infrarot-Flackerdetektor Typ IRD 1020 für alle Brennerarten

2. Sicherheit

Bezüglich Konstruktion und Programmablauf entsprechen die Feuerungsautomaten der Typenreihe MMI den zur Zeit geltenden europäischen Normen und Vorschriften.

3. Montage und Elektroinstallation

Sockelseitig:
- 3 Erdleiterklemmen mit zusätzlicher Lasche für die Brennererdung
- 3 Nulleiterklemmen mit interner, fester Verbindung zum Nulleitereingang Klemme 8
- 2 individuelle Einschiebeplatten und 2 feste Ausbruchöffnungen mit Gewinde PG 11, sowie 2 Ausbruchöffnungen von unten erleichtern die Sockelverdrahtung.

Allgemein:
- Einbaulage beliebig, Schutzart IP 44 (spritzwassersicher). Automat und Fühler sollen jedoch nicht übermässigen Vibrationen ausgesetzt werden.
- Bei der Montage sind die einschlägigen Installationsvorschriften zu beachten.

INBETRIEBNAHME UND UNTERHALT

1. Wichtige Hinweise

- Vor Inbetriebnahme ist die Verdrahtung genau nachzuprüfen. Fehlverdrahtungen können das Gerät beschädigen und die Sicherheit der Anlage gefährden.
- Die Vorsicherung ist so zu wählen, dass die unter den Technischen Daten angegebenen Grenzwerte keinesfalls überschritten werden.
- Das Nichtbeachten dieser Vorschrift kann bei einem Kurzschluss schwerwiegende Folgen für Steuergerät oder Anlage haben.
- Aus sicherheitstechnischen Gründen muss mindestens eine Regelabschaltung pro 24 Std. sichergestellt sein.
- Steuergerät nur spannungslos ein- und ausstecken.
- Feuerungsautomaten sind Sicherheitsgeräte und dürfen nicht geöffnet werden.

2. Funktionskontrolle

Bei der Inbetriebsetzung und nach einer Revision des Brenners sind folgende Kontrollen durchzuführen:

a) Anlaufversuch bei geschlossenem Handventil und überbrücktem Gaswächterkontakt:
   - Gerät muss nach Ablauf der Sicherheitszeit auf Störung gehen.

b) In Betriebstellung bei überbrücktem Gaswächterkontakt das Handventil schliessen:
   - Gerät muss nach Flammenausfall auf Störung gehen.

3. Fehlermöglichkeiten

Brenner geht nicht in Betrieb, Programmanzeige bleibt stehen:
- Elektrische Zuleitung fehlerhaft
- Thermostat oder Gaswächter "AUS"

Automat schaltet auf Störung im blauen Feld:
- Flammensignal

Automat schaltet während der Sicherheitszeit auf Störung (gelber Bereich):
- Keine Flammenbildung (fehlende Zündung, Ventil öffnet nicht etc.)
- Kein oder zu schwaches Flammensignal (Flamme haftet nicht, schlechte Isolation des Flammenfühlers, Brenner nicht richtig an Erdleiter angeschlossen).

Automat schaltet während der Betriebsstellung auf Störung (roter resp. grüner Bereich):
- Flammenabriss
- Flammensignal zu schwach

ANSCHLUSSSCHEMA UND ABLAUFDIAGRAMM MMI 815

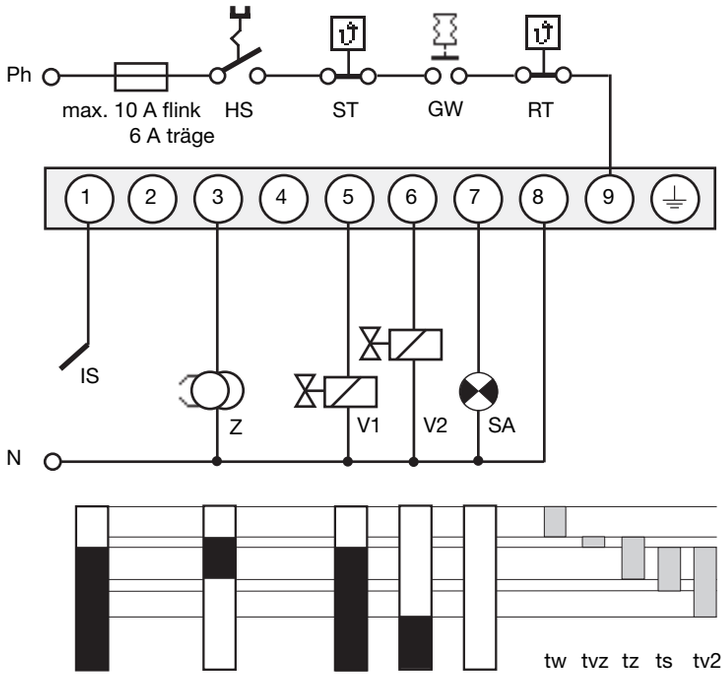

HS	Hauptschalter
GW	Gaswächter
ST	Sicherheitsthermostat
RT	Regelthermostat
IS	Ionisationssonde
V1	Magnetventil 1. Stufe
V2	Magnetventil 2. Stufe
tw	Wartezeit
tvz	Vorzündzeit
tz	totale Zündzeit
ts	Sicherheitszeit
tv2	Verzögerung Ventil 2

IRD ANSCHLUSS

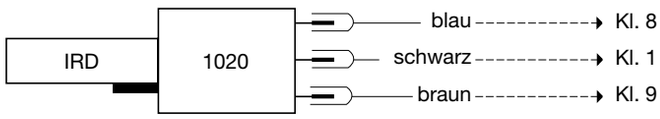

PRINZIPSCHEMA MMI 815

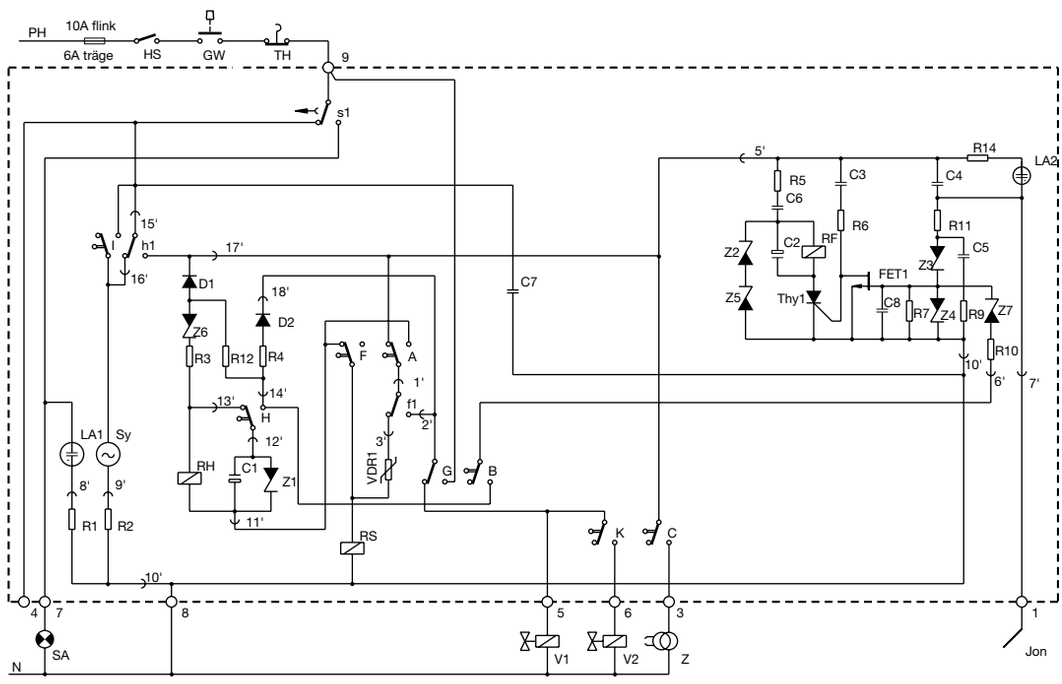

MMI MIT SOCKEL

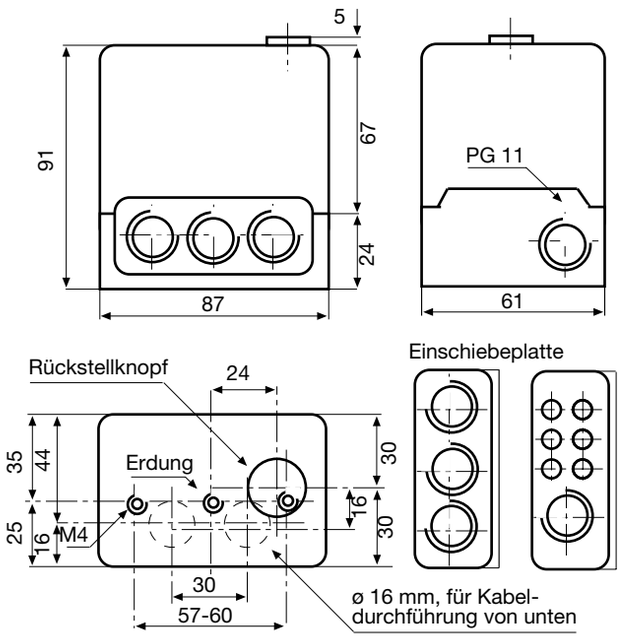

MESSUNG DES FLAMMENSIGNALS

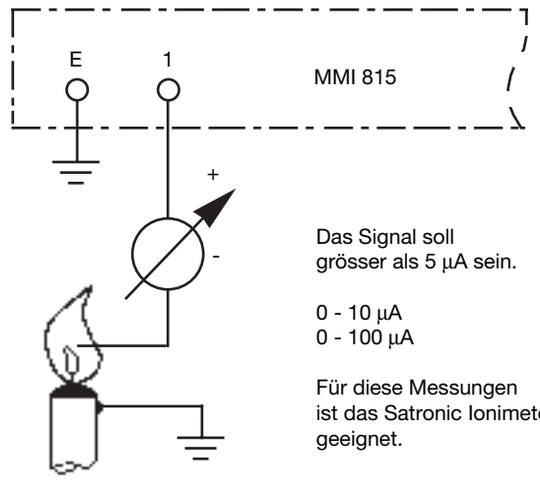

Das Signal soll
grösser als 5 µA sein.

0 - 10 µA
0 - 100 µA

Für diese Messungen
ist das Satronic Ionimeter
geeignet.

IRD 1020

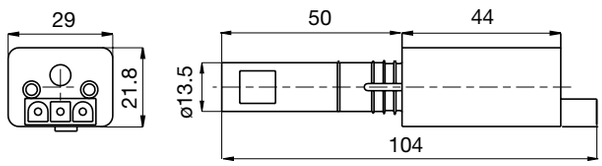

HALTER M93

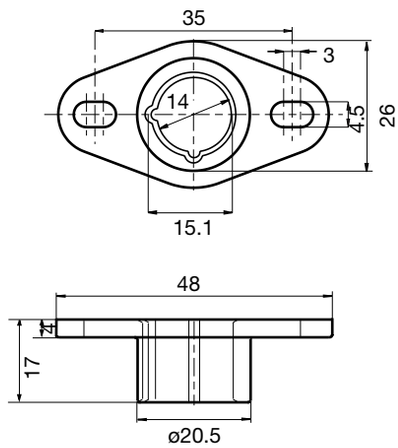

BESTELLANGABEN

ARTIKEL	BESTELLTEXT	ART. NR.
Steuergerät	Typ MMI 815 Mod. 5	06217
oder	Typ MMI 815 Mod. 10	06218
Sockel für MMI 815	Sockel 701 ABEN	70001
Einschiebeplatte	PG-Platte	70502
wahlweise	Kabelklemmplatte	70501
Flammenfühler	IRD 1020 axial	16522
Flammenfühler	IRD 1020 links	16523
Flammenfühler	IRD 1020 rechts	16521
Halter IRD	Halter M 93 zu IRD 1020	59093
Fühlerkabel	3-polig, 0.6 m	7236001

Obige Bestellangaben beziehen sich auf die Normalausführung.
Das Verkaufsprogramm umfasst auch Spezialausführungen.

Technische Änderungen vorbehalten.

Satronic AG
Brüelstrasse 7
Postfach 324
CH-8157 Dielsdorf

Gasfeuerungsautomat

Für atmosphärische Gasbrenner, 2-stufig, mit Ionisationsüberwachung

Mögliche Flammenfühler:
- Ionisationssonde
- Infrarot-Flackerdetektor



ANWENDUNGSBEREICH

Der Gasfeuerungsautomat MMI 816.1 steuert und überwacht atmosphärische Gasbrenner, mit einem abschaltenden Zündgasventil.

Der Gasfeuerungsautomat MMI 816.1 ersetzt den Typ TFI 716. Eine Umverdrahtung oder Auswechslung des Sockels ist nicht notwendig.

AUFBAU UND KONSTRUKTION

Die Automatik ist gut geschützt in einem schwer entflammbaren, transparenten und steckbaren Kunststoffgehäuse eingebaut und beinhaltet:
- Synchronmotor mit Untersetzungsgetriebe als Schaltwalzenantrieb
- Schaltwalze mit informativer, farbiger Programmanzeige
- 12-fach Nockenschaltwerk zur Steuerung des Programmablaufs
- Steckbare Printplatten mit den elektronischen Komponenten

Folgende wichtige Anzeige- und Bedienungselemente sind auf der Frontseite des Automaten zusammengefasst:
- Leuchttaste für Störanzeige und Entriegelung
- Farbige Programmanzeige
- Schraube zur Zentralbefestigung

Im Montagesockel befinden sich die Anschlußklemmen für die Speisung (220 / 240 V, 50 Hz), die Ionisationssonde, den Zündtrafo, das Zünd- und Hauptgasventil. Der Automat ist mit einem Anschluss für eine externe Störanzeige versehen. Der Automat kann in jeder beliebigen Lage eingebaut werden.

TECHNISCHE DATEN

Betriebsspannung	220 / 240 V (-15... +10%) 50 Hz (50 - 60 Hz)
Vorsicherung	10 A flink, 6 A träge
Eigenverbrauch	10 VA
Max. Belastung pro Ausgang	
- Kl.3	2 A, cos φ 0.2
- Kl. 7	2 A, cos φ 0.4
- Kl. 5, 6	1 A, cos φ 0.4
Total Belastung	5 A, cos φ 0.4
Wartezeit ca.	18 sec.
Vorzündzeit ca.	3 sec.
Zündzeit total ca.	11 sec.
Sicherheitszeit Zündgasventil	10 sec.
Einschaltdauer Zündgasventil ca.	24 sec.
Verzögerung Hauptgasventil ca.	14 sec.
Sicherheitszeit Hauptgasventil	10 sec.
Wartezeit nach Störung	keine
Zugelassene Umgebungstemperatur	-20° C... +60° C
Min. erforderlicher Ionisationsstrom	5 µA
Sondenisolation	>50 MΩ
Max. Länge Ionisationsleitung	20 m
Schutzart	IP 44
Gewicht inkl. Sockel	340 g
Einbaulage	beliebig

0708.25-01-d/04/99

ANWENDUNGSTECHNISCHE MERKMALE

1. Flammenüberwachung

Die Flammenüberwachung erfolgt mittels Ionisationselektrode. Dabei ist besonders auf temperaturfestes Material und gute Isolierung zu achten.
Die Flammenüberwachung mit der Ionisationssonde ist nur in Netzen mit geerdetem Nulleiter möglich.
Mit Infrarot-Flackerdetektor Typ IRD 1020 für alle Brennerarten

2. Brennersteuerung

- Bei Wärmeanforderung erfolgt zuerst eine programmierte Wartezeit von 18 Sekunden. Danach wird die Zündung eingeschaltet und 3 Sekunden später das Zündgasventil.

- Bei Flammenbildung während der ersten Sicherheitszeit wird 14 Sekunden nach Öffnung des Zündgasventiles (Stabilisierung der Zündgasflamme) das Hauptgasventil geöffnet. Das Zündgasventil bleibt jetzt noch 10 Sekunden geöffnet (zweite Sicherheitszeit). Wenn nach Ablauf dieser zweiten Sicherheitszeit keine Hauptflamme vorhanden ist, werden Zünd- und Hauptgasventil sofort geschlossen und der Automat verriegelt.

- Bei Flammenausfall während des Betriebes verriegelt der Automat ebenfalls. Wenn vorzeitig, d.h. während der Wartezeit, ein Flammensignal gemeldet wird, kann die Zündung nicht eingeschaltet, und die Gasventile nicht geöffnet werden, der Automat verriegelt.

- Der Automat MMI 816.1 ist unterspannungssicher ausgelegt. Sinkt die Betriebsspannung, wird bei spätestens 160V der Brenner abgeschaltet. Steigt die Betriebsspannung wieder an, erfolgt bei spätestens 180 V selbsttätig ein neuer Anlauf.

- Nach einer Störung kann der Automat sofort entriegelt werden.

3. Sicherheit

Bezüglich Konstruktion und Programmablauf entsprechen die Feuerungsautomaten der Typenreihe MMI den zur Zeit geltenden europäischen Normen und Vorschriften.

4. Montage und Elektroinstallation

Sockelseitig:
- 3 Erdleiterklemmen mit zusätzlicher Lasche für die Brennererdung
- 3 Nulleiterklemmen mit interner, fester Verbindung zum Nulleitereingang Klemme 8
- 2 individuelle Einschiebeplatten und 2 feste Ausbruchöffnungen mit Gewinde PG11, sowie 2 Ausbruchöffnungen von unten erleichtern die Sockelverdrahtung.

Allgemein:
- Einbaulage beliebig, Schutzart IP 44 (spritzwassersicher). Automat und Fühler sollen jedoch nicht übermässigen Vibrationen ausgesetzt werden.
- Bei der Montage sind die einschlägigen Installationsvorschriften zu beachten.

INBETRIEBNAHME UND UNTERHALT

1. Wichtige Hinweise

- Vor Inbetriebnahme ist die Verdrahtung genau nachzuprüfen. Fehlverdrahtungen können das Gerät beschädigen und die Sicherheit der Anlage gefährden.
- Die Vorsicherung ist so zu wählen, dass die unter den Technischen Daten angegebenen Grenzwerte keinesfalls überschritten werden. Das Nichtbeachten dieser Vorschrift kann bei einem Kurzschluss schwerwiegende Folgen für Steuergerät oder Anlage haben.
- Aus sicherheitstechnischen Gründen muss mindestens eine Regelabschaltung pro 24 Std. sichergestellt sein.
- Steuergerät nur spannungslos ein- und ausstecken.
- Feuerungsautomaten sind Sicherheitsgeräte und dürfen nicht geöffnet werden.

2. Funktionskontrolle

Eine sicherheitstechnische Überprüfung der Flammenüberwachung muss sowohl bei der erstmaligen Inbetriebnahme wie auch nach Revisionen oder längerem Stillstand der Anlage vorgenommen werden

a) Anlaufversuch bei geschlossenem Handventil und überbrücktem Gaswächterkontakt:
   - Gerät muss nach Ablauf der Sicherheitszeit auf Störung gehen.

b) In Betriebstellung bei überbrücktem Gaswächterkontakt das Handventil schliessen:
   - Gerät geht nach Flammenausfall auf Störung.

3. Mögliche Störungsursachen

Achten Sie bei einer Störung immer auf die Position der farbigen Programmanzeige.

- Brenner geht nicht in Betrieb, Walze bleibt stehen:
  –> Elektrische Zuleitung fehlerhaft
  –> Thermostat oder Gaswächter "Aus"

- Automat schaltet während der Wartezeit (blauer Bereich) auf Störung:
  –> Flammensignal

- Automat schaltet während der Sicherheitszeit (Zündgasventil, erster gelber Bereich) auf Störung:
  –> keine Zündgasflamme (fehlende Zündung, Ventil öffnet nicht etc.)
  –> kein oder zu schwaches Flammensignal (Flamme haftet nicht, schlechte Isolation des Flammenfühlers, Brenner nicht richtig an Erdleiter angeschlossen)

- Automat schaltet im roten Bereich auf Störung:
  –> Zündgasflamme instabil, Flammenabriss
  –> Flammensignal zu schwach

- Automat schaltet während der Sicherheitszeit (Hauptgasventil, zweiter gelber Bereich) auf Störung:
  –> keine Hauptgasflamme (Ventil öffnet nicht, Zündung durch Zündgasflamme nicht möglich, ungeeignete Position des Flammenfühlers)
  –> Flammensignal zu schwach

- Automat schaltet während der Betriebstellung (grüner Bereich) auf Störung:
  –> Hauptgasflamme instabil, Flammenabriss
  –> Flammensignal zu schwach

ANSCHLUSSSCHEMA MMI 816.1

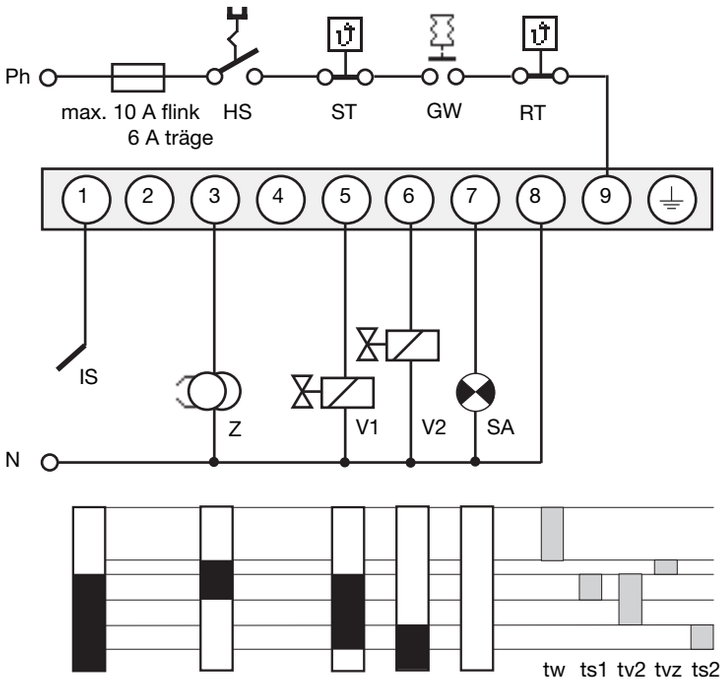

HS	Hauptschalter
GW	Gaswächter
ST	Sicherheitsthermostat
RT	Regelthermostat
IS	Ionisationssonde
Z	Zündtrafo
V1	Zündgasventil
V2	Hauptgasventil
SA	Externe Störanzeige

tw	Wartezeit
ts1	1. Sicherheitszeit
tv2	Verzögerung Hauptventil
tvz	Vorzündzeit
ts2	2. Sicherheitszeit

IRD ANSCHLUSS

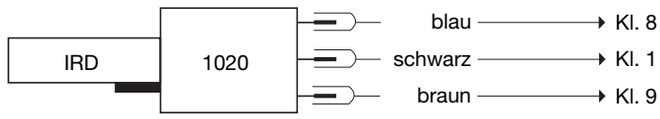

PRINZIPSCHEMA MMI 816.1

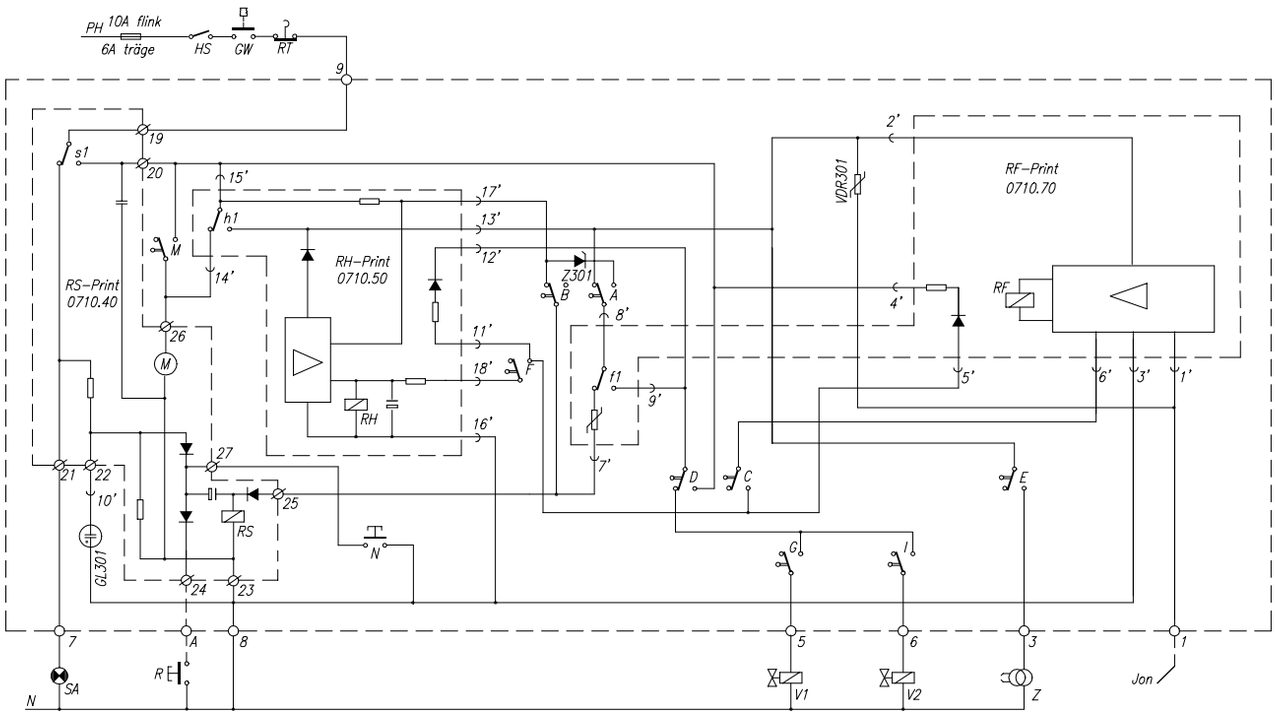

MASSBILD MMI 816.1

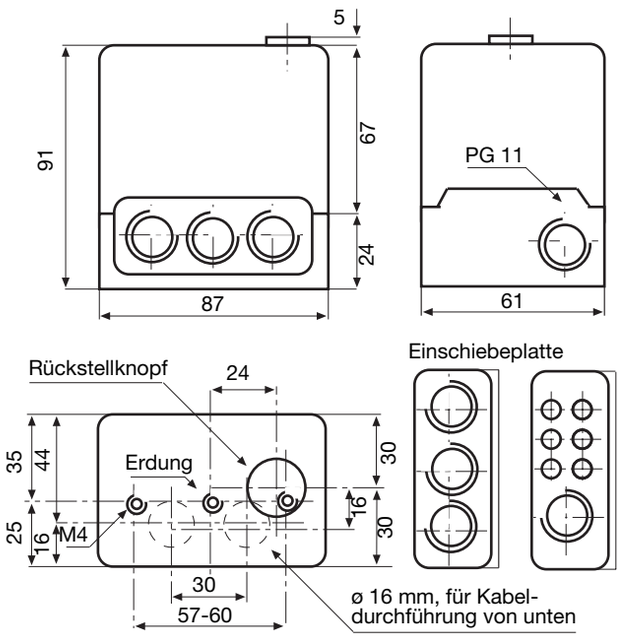

MESSUNG DES FLAMMENSIGNALES

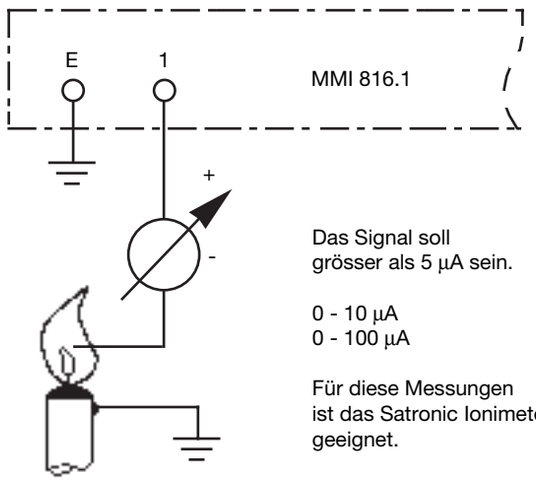

Das Signal soll
grösser als 5 µA sein.

0 - 10 µA
0 - 100 µA

Für diese Messungen
ist das Satronic Ionimeter
geeignet.

IRD 1020

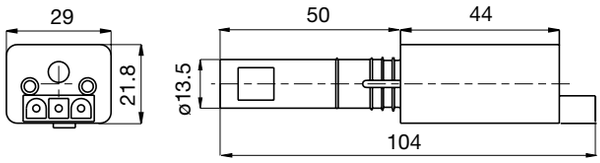

HALTER M93

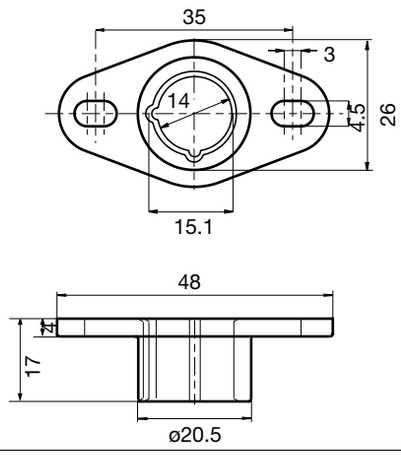

BESTELLANGABEN

ARTIKEL	BESTELLTEXT	ART. NR.
Feuerungsautomat	MMI 816.1	0621620
Sockel	Typ ABEN	70001
Einschiebeplatte	PG-Platte	70502
wahlweise	Kabelklemmplatte	70501
Flammenfühler	IRD 1020 axial	16522
Flammenfühler	IRD 1020 links	16523
Flammenfühler	IRD 1020 rechts	16521
Halter IRD	Halter M 93 zu IRD 1020	59093
Fühlerkabel	3-polig, 0.6 m	7236001

Obige Bestellangaben beziehen sich auf die Normalausführung.
Das Verkaufsprogramm umfasst auch Spezialausführungen.

Technische Änderungen vorbehalten

Satronic AG
Brüelstrasse 7
Postfach 324
CH-8157 Dielsdorf

Gas burner automatic safety control

For power gas burners
Terminals for air damper motor
Built-in remote reset for lock-outs

Possible flame detectors:
- Ionization probe
- Infrared flicker detector



INTRODUCTION

The gas burner automatic safety control MMI 962.1 controls and monitors blown gas- and combined burners of any nominal thermal load (tested and certified according to EN 298).
If an air damper unit is connected, a 2-stage operation with two fuel valves or a modulating operation with one fuel valve is possible.
Various types and model designations differentiate the automatic safety controls with respect to the programme times, as well as with regard to differing national standards. The control box type MMI 962.1 Mod. 23 can be used instead of the types MMI 812 Mod. 23 or MMI 812.1 Mod. 23.

CONSTRUCTIONAL FEATURES

The automatic control is housed in a non-inflammable, transparent, plug-in type plastic case and contains:
- Synchronous motor with speed reducer gears as the drive for the switching cam
- Switching cam with informative programme display in colour
- 12 times cam assembly for controlling the programme sequence
- Plug-in type circuit boards with the electronic components

The following important indicating - and operating elements are located on the front panel of the automatic control:
- Illuminated pushbutton for indication of malfunctions and reset
- Programme display in colour
- Screw for central mounting

TECHNICAL DATA

Operating voltage	220 / 240 V (-15... +10%) 50 Hz
Differing frequency	Results in a proportional deviation of the time
Rating fuse	max. 10 A rapid, 6 A slow
Power consumption	10 VA
Max. load per output:	
- term. 3	2A, cos φ 0.2
- term. 4, B	2A, cos φ 0.4
- term. 5, 6, C	1A, cos φ 0.4
total load	5A, cos φ 0.4
Amplifier sensitivity	1 µA
Minimum required Ionization current	5 µA
Flame detector cable	max. 20 m cable length
Air pressure monitor	working contact 4 A, 230 V
Waiting time for malfunction remedy	None
Flame detector	
- Ionization probe	
- Infrared flicker detector	IRD 1020
Weight, incl. base	350 g
Mounting position	any
Insulation standard	IP 44
Admissible ambient temperature for controller and flame detector	-20° C... +60° C
Classified acc. to EN 298	BTLLXN

program timings (sec.)		MMI 962.1
Model		23
Waiting time at start-up	tw	8
Max. reaction time for air proving switch	tlw	15
Pre-purge time	tv1	30
LK open signal	tlk	38
Pre-ignition time	tvz	3
Total ignition time	tz	6.6
Safety time	ts	3
Time delay term.6 / term.C	tv2	8

APPLICATION TECHNOLOGY FEATURES

1. Flame Monitoring

The flame monitoring can be effected with the following flame detectors:
- With ionization electrodes in power grids with earthed neutral conductor, utilizable with gas burners (interference effects of the ignition spark cannot influence the formation of the flame signal).
- With infrared flicker detector type IRD 1020 for all types of burners. (siehe Dok. 746)

2. Burner Control

- The burner controls MMI 962.1 features a low-voltage protection. If the supply voltage dropps below 160 V during operation, the burner switches-off. When the supply voltage raises above 180 V, the burner performs a restart independently.
- The automatic burner controls MMI only operates when a load is connected to terminal 5. If the fuel valve is interrupted by an external contact during the pre-purging phase, a resistance of max. 22 kW, 4 Watt has to be applied bet-ween the terminals 5 and 8.
- Functional test of the air pressure monitor before the startup and monitoring of the air pressure during the pre-purging time, as well as in the operating condition of the burner. For normal applications a working contact with a power rating of 4 A / 230 V is sufficient.
- In the case of the automatic control MMI 962.1, contacts can be installed between the terminals 1 and 9 (e.g., valve limit position contacts). These are checked for their correct closing position when the unit is started up. The connection 1-9 has to be closed during the starting phase of the auto-matic control.
- No fuel valve must be connected to terminal 6.

3. Safety

With respect to design and programme sequence, the gas burner automatic safety controls of the MMI 962 type range comply with the currently applicable European standards and regulations.

4. Mounting and Electrical Installation

Wiring base:
- 3 earth terminals with additional terminal for burner earthing
- 3 neutral terminals with internal permanent connection to neutral terminal 8
- 2 independant spare terminals (S1 and S2)
- extra terminals A, B and C are standard
- 2 slide-in plates and 2 easy knock out holes (PG11 thread) plus 2 knock out holes in the base bottom faciliate the base wiring

General:
- Mounting position as required, insulation standard IP 44 (splash-proof). The automatic control and sensor should, however, not be exposed to excessive vibration.
- During mounting and installation, the applicable regulations for installation have to be observed.

Remote reset for lock-outs:
- For the external reset, a temporary switch (push-button switch) has to be wired between terminals A and Mp.
- The terminal A can be broke-off if not used.

COMMISSIONING AND SERVICE/MAINTENANCE

1. Important Remarks
- Before commissioning, the wiring has to be accurately checked. Faulty wiring can damage the unit and endanger the safety of the installation.
- The mains fuse has to be selected so that the limit values indicated under "Technical Specifications" are under no circumstances exceeded. Non-compliance with this regulation can have very serious consequences for the control unit and for the installation in the case of a short-circuit.
- For safety reasons, at least one control shut-down per 24 hours must be assured.
- The control unit must be plugged-in or -out only when the mains supply has been disconnected.
- Automatic burner safety controls are safety devices and must not be opened.

2. Functional Check
During commissioning and after an overhaul of the burner, the following checks have to be carried out:

a) Starting test with closed manual valve and bridged gas monitor contact:
   - The device must go into a fault condition after the safety period has elapsed.

b) Close the manual valve in operating position with the gas monitor contact bridged.
   - The device must go into a fault condition after a flame failure.

c) Air pressure monitor contact interrupted:
   - Device goes into a fault condition.

d) Bridge air pressure monitor contact before starting:
   - Device must not start.

3. Trouble Shooting
Burner does not go into operation, programme indication remains:
- Electrical connection defective.
- Thermostat or gas monitor "OFF".

Burner does not go into operation, programme indication rotates continuously:
- Air pressure monitor defective, respectively, not in starting position. (Working contact must be open).
- Connection term. 1 - term. 9 interrupted
- mains voltage < 180V

The automatic control switches to fault condition shortly after the start of the pre-purge time (line within the blue zone):
- Air pressure monitor contact does not close.
- No load on terminal 5.
- Flame signal.

Automatic control switches to fault condition during the pre-purging (blue zone):
- Air pressure monitor contact open
- Flame signal (stray light)

Automatic control switches to fault condition during the safety time (yellow zone):
- No flame formation (ignition missing, valve does not open, etc.)
- No flame signal or too weak flame signal (flame does not adhere, poor insulation of the flame detector, burner not properly connected to the earth conductor).

Automatic control switches to fault condition during the operating position (red, resp. green zone):
- Flame lift-off
- Air pressure monitor contact opens
- Flame signal too weak.

SCHEMATIC CONNECTION DIAGRAM AND PROCESS DIAGRAM MMI 962.1

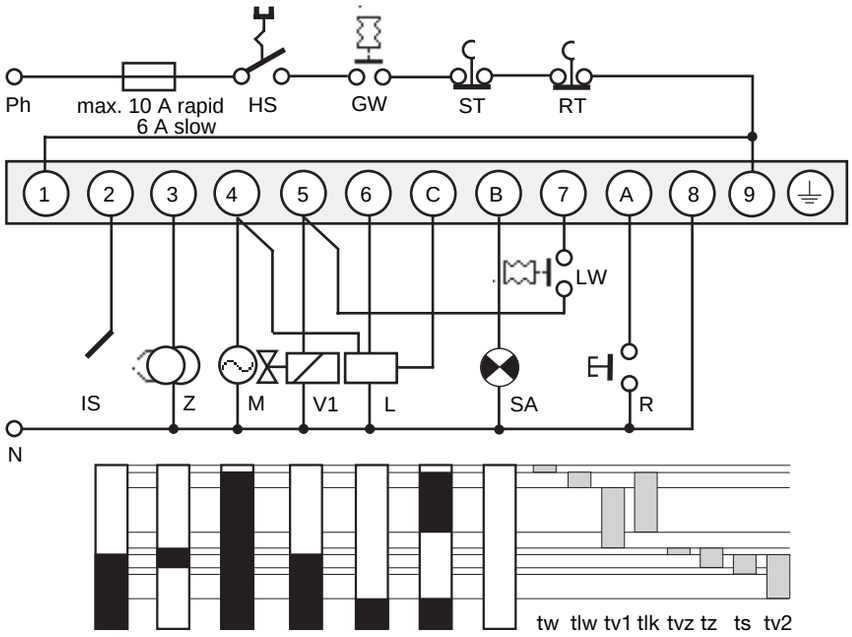

HS	Mains switch
GW	Gas pressure switch
ST	Limit thermostat
RT	Control thermostat
IS	Ionization probe
Z	Ignition
M	Burner motor
V1	Solenoid valve 1st stage
L	Air damper unit
LW	Air pressure monitor
SA	External fault indication
R	Remote reset temporary switch
tw	Waiting time at start-up
tlw	Max. reaction time for air proving switch
tv1	Pre-purge time
tlk	LK open signal
tvz	Pre-ignition time
tz	Total ignition time
ts	Safety time
tv2	Time delay term. 6 / term. C

IRD CONNECTION

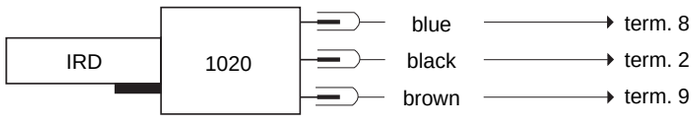

SCHEMATIC DIAGRAM MMI 962.1

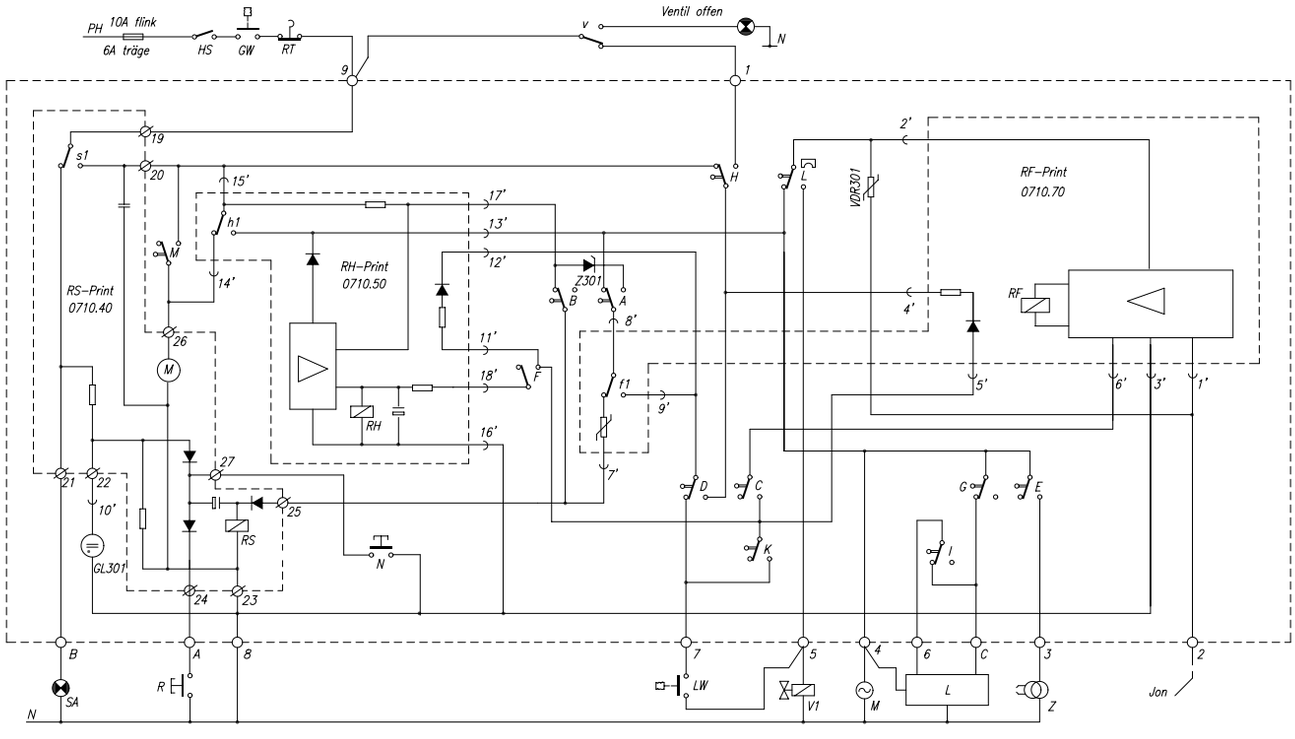

MMI WITH BASE

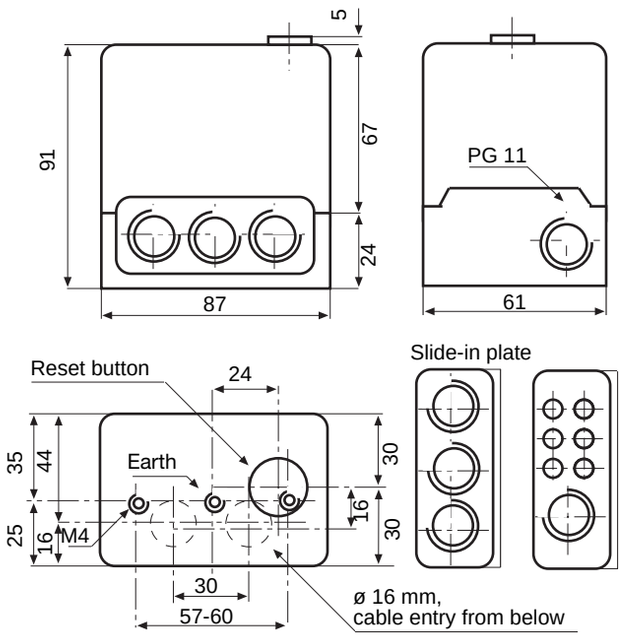

MEASUREMENT OF THE FLAME SIGNAL

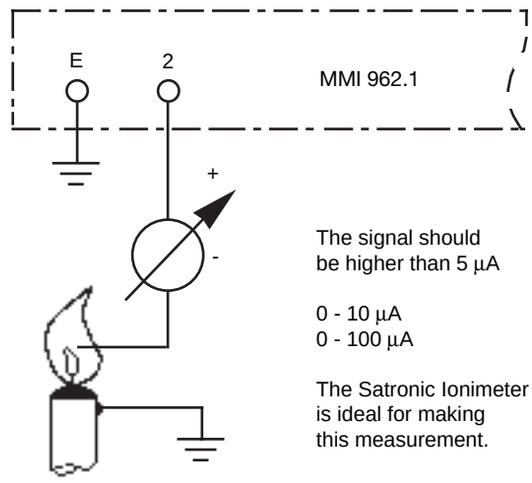

The signal should be higher than 5 µA

0 - 10 µA
0 - 100 µA

The Satronic Ionimeter is ideal for making this measurement.

IRD 1020

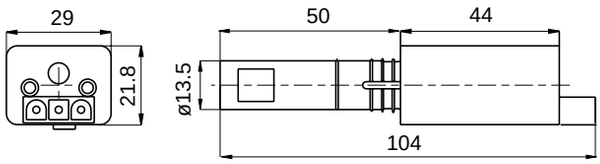

HOLDER M 93

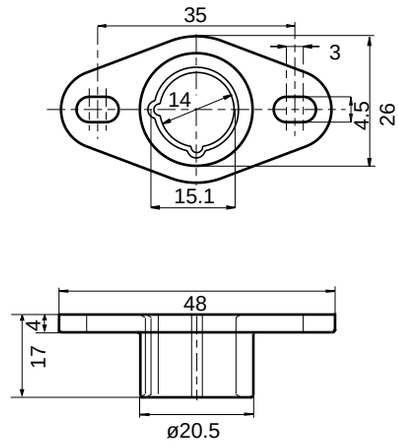

ORDERING INFORMATION

ITEM	DESIGNATION	ITEM NO.
Control unit	Type MMI 962.1 mod. 23	06256
Socket	Wiring base S 98	75310
Multiwire base	Wiring base MW 880 ABC	74001
Slide-in plate	PG-plate	70502
optionally	Cable clamping plate	70501
Flame detector	IRD 1020 end-on viewing	16522
Flame detector	IRD 1020 side-on left	16523
Flame detector	IRD 1020 side-on right	16521
IRD mounting flange	Mounting flange M 93 for IRD 1020	59093
Flame detector cable	3-wire, 0.6 m	7236001

The above ordering information refers to the standard version.
Special versions are also included in our product range.

Specifications subject to change without notice.

Satronic AG
Brüelstrasse 7
Postfach 324
CH-8157 Dielsdorf

Burner Control Box

For 2-stage forced draught and combi oil/gas burners

Suitable flame detectors:
- Ionisation probe
- UV sensor
- Infra-red flicker detector



INTRODUCTION

The MMG burner control box is capable of controlling and monitoring forced draught and combi oil/gas burners of any nominal rating (tested and approved as per EN 298). The MMG 810.1 model 33 control boxes are also suitable for use in stationary warm air generators (Direct air heaters according to DIN 4794).
Different type and model designations identify the control boxes according to varying national standards, and to some extent, according to programme times.

TYPES AVAILABLE

MMG 810.1	Mod. 33	Art. Nr. 0640220
	Mod. 43	Art. Nr. 0642520
	Mod. 45	Art. Nr. 0642620
MMG 811.1	Mod. 33	Art. Nr. 0640520
	Mod. 63	Art. Nr. 0640420

ONSTRUCTIONAL FEATURES

The control box is enclosed in a protective, flame resistant, transparent, plug-in type plastic housing, and includes:
- Synchronous motor with reduction gearing driving cam switch
- Cam switch with informative, coloured programme indicator
- 12-way cam switch assembly controlling the programme sequence
- Electronic components on plug-in printed circuit

The following important indicators and operating controls are situated on the front of the control box:
- Reset button incorporating signal lamp for malfunction (lockout)
- Coloured programme indicator
- Central screw fastening

TECHNICAL DATA

Supply voltage	220 / 240 V (-15... +10%) 50 Hz (50 - 60 Hz)
AC frequency variations	result in proportional timing deviations
Fuse rating	max. 10 A rapid, 6 A slow
Power consumption	10 VA
Max. current per output	
term. 3	2A, cos φ 0.2
term. 4, B	2A, cos φ 0.4
term. 5, 6, C	1A, cos φ 0.4
Total load	5A, cos φ 0.4
Amplifier sensitivity	1 µA
Min. current from UV tube or ionisation probe	5 µA
Flame detector cable	max. 20 m cable length
Air proving switch	1 terminal 4 A, 230 V
Reset delay	none
Flame detector	
- Ionisation probe	
- Infra-red flicker detector	IRD 1020
- UV tube type	UVZ 780 red markings installed radially or axially
Infra red flare detector	IRD 1020
Weight incl. base	350 g
Mounting attitude	any
Insulation standard	IP 44
Permissable ambient temp.	-20° C... +60° C
Classified acc. to EN 298	BTLLXN

program timings (sec.)		MMG 810.1			811.1	
Model		33	43	45	33	63
Waiting time at start-up	tw	9	9	9	9	6
Max. reaction time for air proving switch	tlw	6	6	6	6	5
Pre-purge time	tv1	24	40	40	24	55
Pre-ignition time	tvz	3	3	3	3	3
T. ignition time	tz	6	6	8	6	5.5
Safety time	ts	3	3	5	3	3
Time delay term.6 / term.C	tv2	10	10	10	10	6

For external resetting, the remote reset device FR 870 (art. No. 70700) can be utilized. (Refer to doc. 750).

TECHNICAL FEATURES

1. Flame detection

The following types of flame detector can be employed:

- Ionisation electrode, where the mains supply provides a neutral earth connection. Suitable for gas burners (signal current from flame cannot be influenced by interference from ignition spark).
- UV sensor type UVZ 780 red, suitable for gas and combi burners.
- Infra-red flicker detector type IRD 1020 for all types of burner.

2. Burner Control

- The burner controls features a low-voltage protection. If the supply voltage dropps below 160 V during operation, the burner switches-off. When the supply voltage raises above 180 V, the burner performs a restart independently.
- The MMG control boxes only operate when a load is connected to terminal 5. If the fuel valve is isolated during the pre-purge by way of an external switch contact, a resistor with a value of max. 22 kΩ/4 watts, must be connected between terminals 5 and 8.
- Functional check of the air proving switch before the start, and monitoring of the air pressure during pre-purge as well as during normal operation. In normal use, switch contacts with a rating of 4 A / 220 V are sufficient.
- On the MMG 810.1, switch contacts (e.g. valve end contact) can be wired between terminals 1 and 9. These contacts are checked for proper closure during the burner start phase. The connection between terminals 1 and 9 must be complete during the start phase.
- The MMG 810.1 control box monitors the ignition spark if the UVZ 780 (red) is used for flame detection, and terminals C and 9 are wired together.

3. Safety

The design/construction and programme sequence of the control boxes in the MMG series conform to the present applicable European standards and regulations.

4. Installation

At the base:

- 3 earth terminals, with an additional tag for the burner earth.
- 3 neutral terminals, with a fixed internal through connection to the neutral input, terminal 8.
- 2 separate slide-in plates and 2 fixed, threaded knock-outs (PG 11 thread) as well as 2 knock-outs underneath, facilitate wiring of the base.

General:

- Can be mounted in any position, insulated as per IP 44 standard (unaffected by water spray). The control box and detector probes should however not be subjected to excessive vibration.
- The applicable installation regulations must be observed during installation.

COMMISSIONING AND MAINTENANCE

1. Important

- The wiring must be checked exactly when commissioning the installation. Incorrect wiring could damage the control box, putting the safety of the burner system at risk.
- The chosen fuse rating must not, on any account, be higher than the value given in the technical data. Failure to observe this instruction could, in the case of a short circuit, have serious consequences for the control box or burner system.
- For safety reasons, it must be ensured that the control box performs at least one normal shut-down during every 24 hour period.
- Switch off or disconnect the power before plugging in or unplugging the unit.
- Control boxes are safety devices and should not to be interfered with.

2. Functional Check

During commissioning and after an overhaul of the burner, the following checks have to be carried out:

a) Starting test with closed manual valve and bridged gas monitor contact:
   - The device must go into a fault condition after the safety period has elapsed.

b) Close the manual valve in operating position with the gas monitor contact bridged.
   - The device must go into a fault condition after a flame failure.

c) Air pressure monitor contact interrupted:
   - Device goes into a fault condition.

d) Bridge air pressure monitor contact before starting:
   - Device must not start.

3. Trouble Shooting

Burner does not go into operation, programme indication remains:

- Electrical connection defective.
- Thermostat or gas monitor "OFF".

Burner does not go into operation, programme indication rotates continuously:

- Air pressure monitor defective, respectively, not in starting position. (Working contact must be open).
- Connection term. 1 - term. 9 interrupted
- mains voltage < 180V

The automatic control switches to fault condition shortly after the start of the pre-purge time (line within the blue zone):

- Air pressure monitor contact does not close.
- No load on terminal 5.
- Flame signal.

Automatic control switches to fault condition during the pre-purging (blue zone):

- No flame formation (ignition missing, valve does not open, etc.)
- No flame signal or too weak flame signal (flame does not adhere, poor insulation of the flame detector, burner not properly connected to the earth conductor).

Automatic control switches to fault condition during the operating position (red, resp. green zone):

- Flame lift-off
- Air pressure monitor contact opens
- Flame signal too weak.

SCHEMATIC CONNECTION DIAGRAM AND PROCESS DIAGRAM MMG 810.1

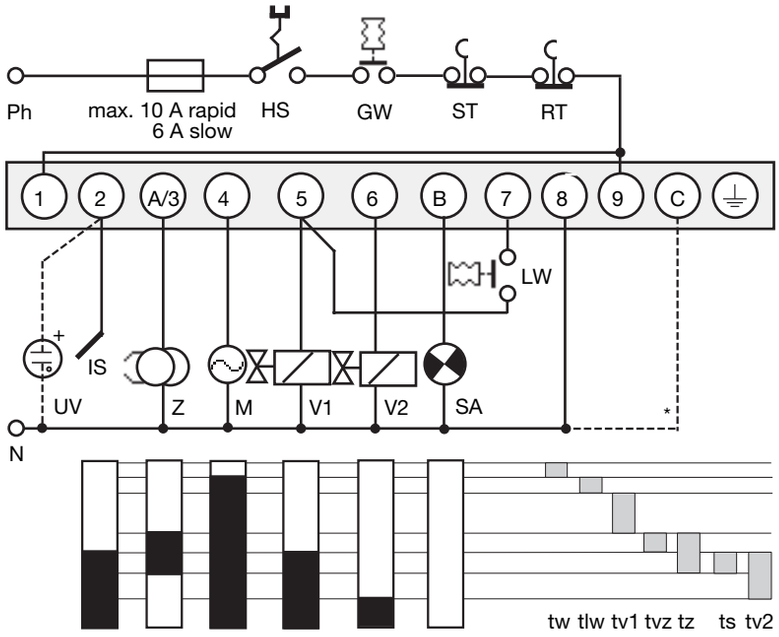

SCHEMATIC CONNECTION DIAGRAM AND PROCESS DIAGRAM MMG 811.1

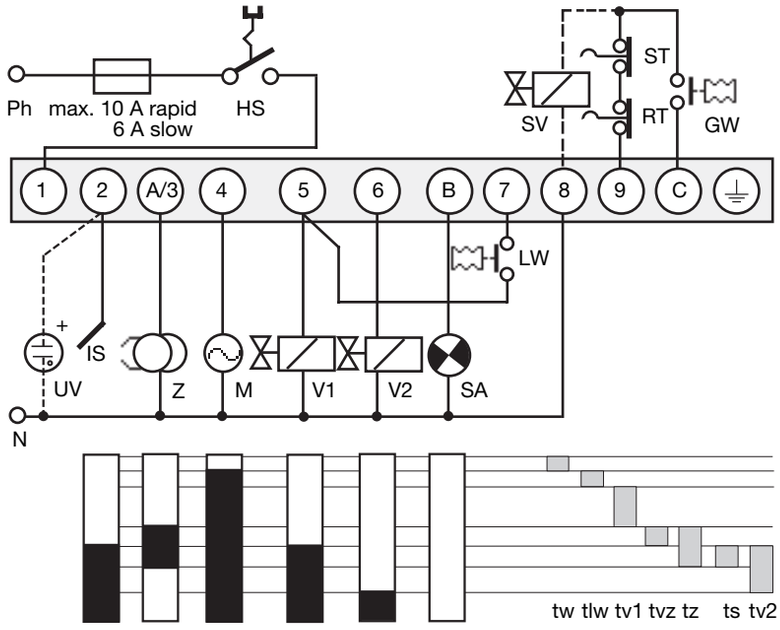

* for ign. spork detection only

HS	Mains switch
GW	Gas pressure switch
ST	Limit thermostat
RT	Control thermostat
IS	Ionisation probe
UV	UV sensor
Z	Ignition
M	Burner motor
V1	Solenoid valve, 1st-stage
V2	Solenoid valve, 2nd-stage
LW	Air pressure monitor
SA	External lock-out signal for spark detection only
SV	Safety valve
tw	Waiting time at start-up
tlw	Max. reaction time for air proving switch
tv1	Pre-purge time
tvz	Pre-ignition time
tz	Total ignition time
ts	Safety time
tv2	Time delay term.6 / term. C

IRD CONNECTION

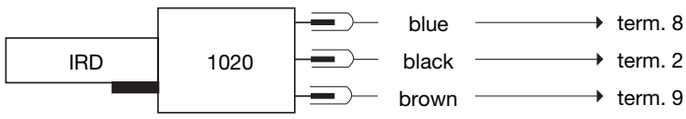

SCHEMATIC DIAGRAMM MMG 810.1

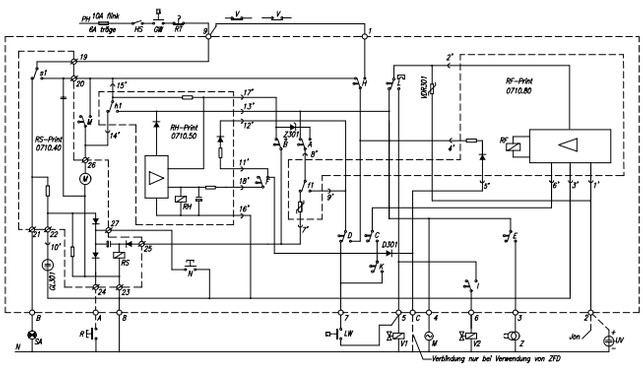

SCHEMATIC DIAGRAMM MMG 811.1

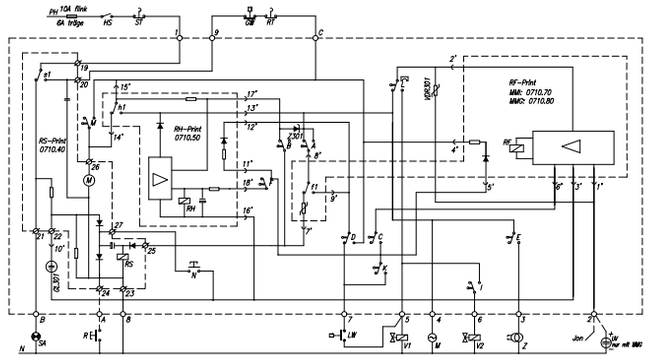

MMG AND SOCKET

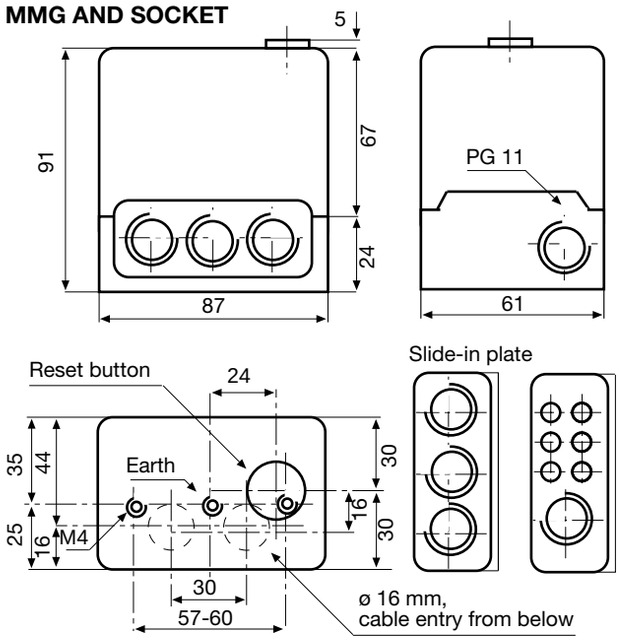

UVZ 780 AND HOLDER

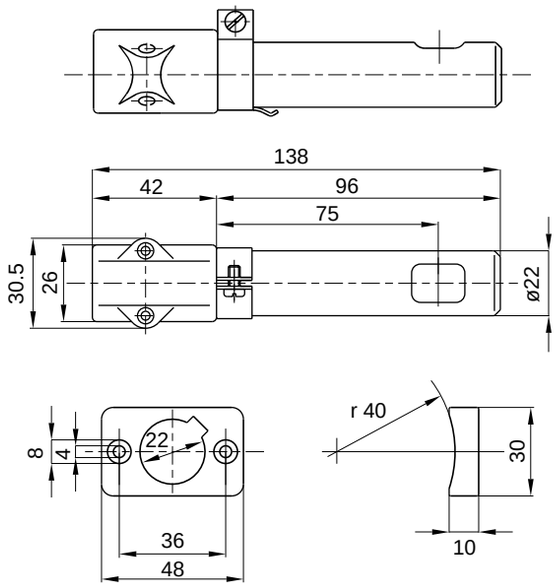

IRD 1020

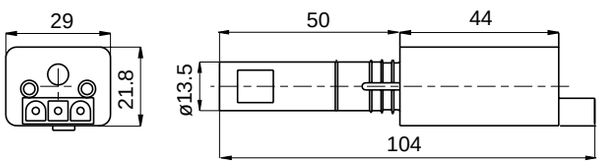

HOLDER M93

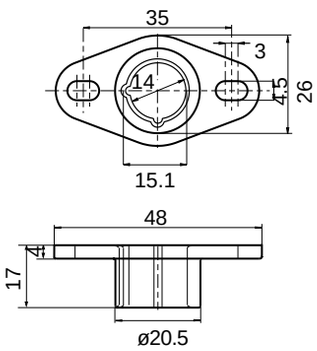

CHECKING THE FLAMESIGNAL

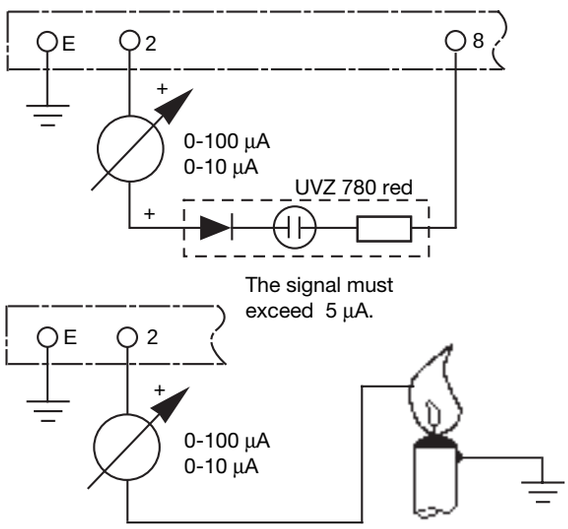

ORDERING INFORMATION

ITEM	DESIGNATION	ITEM NO.
Control box	Type MMG 810.1 mod. 33	0640220
or	Type MMG 811.1 mod. 33	0640520
Socket for MMG 810.1	Socket 701 TTG-EN	70101
Socket for MMG 811.1	Socket 701 TTG-FN	70102
Slide-in plate	Cable terminal plate	70502
or	PG-plate	70501
Flame detector	IRD 1020 end-on viewing	16522
Flame detector	IRD 1020 side-on left	16523
Flame detector	IRD 1020 side-on right	16521
Flame detector	UVZ 780 red	18813
IRD mounting flange	IRD Holder M93	59093
UVZ mounting flange	UVZ Holder	18807
Flame detector cable	3-wire, 0.6 m	7236001

The above ordering information refers to the standard version.
Special versions are also included in our product range.

Specifications subject to change without notice.

Satronic AG
Brüelstrasse 7
Postfach 324
CH-8157 Dielsdorf

TMG 740-3

Burner Control Box

For high performance forced draught and dual fuel burners in intermittent operation (single or two stage versions).
Suitable flame detectors:
- Ionisation probe
- UV sensor
- Infra-red flicker detector

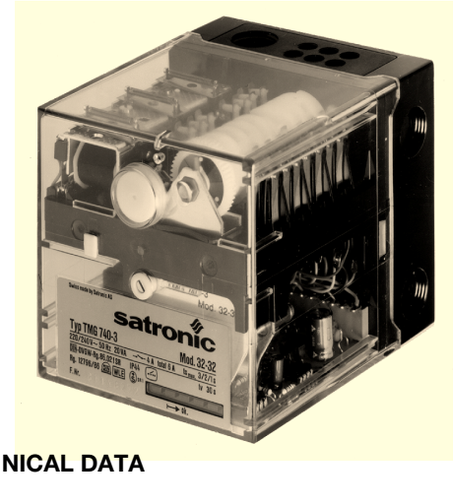

INTRODUCTION

The TMG 740-3 burner control box is capable of controlling and monitoring medium to high performance forced draught and dual fuel oil/gas burners in single or two stage versions. It can be used, as prefered, for multi-stage or modulating operation with burners of any nominal rating as well as in direct air heaters (as per DIN 4794).
Different model designations identify the control boxes according to programme times for varying national standards, or for special applications e.g. high-speed steam generators.
A special version is available for operation with ignition spark monitoring in conformance with French national regulations.
The TMG 740-3 is fully interchangeable with the earlier versions -1 and -2.

CONSTRUCTIONAL FEATURES

The control box is enclosed in a protective, flame resistant, transparent, plug-in type plastic housing, and includes:
- Synchronous motor with gearbox driving cam switch
- Cam switch with informative, coloured programme indicator
- 16-way cam switch assembly controlling the programme sequence
- 2 DC relays and 1 remanence relay on common yoke
- Plug-in printed circuit board with mains transformer, LED display and electronic components

On the underside of the unit are robust plug terminals where the air proving switch and monitoring of the ignition spark can be programmed via two wire links which can be cut as required. The flame detector selection switch is also situated on the the underside of the unit.

The following important indicators and operating controls can be found on the front of the control box:
- Reset button incorporating signal lamp for malfunction (lockout)
- Coloured programme indicator
- Flame signal indicator with 5 LED's
- Central screw fastening

TECHNICAL DATA

Supply voltage		220 / 240 V (-15... +10%) 50 HZ (40 - 60 Hz)
AC frequency variations		result in proportional timing
deviations		
Fuse rating		10 A rapid, 6 A slow
Power consumption		approx. 15 VA
Max. current per		
output terminal		4 A
Total		6 A
Sensitivity		
Ionisation input		1.6 µA
UV input		70 µA
Min. sensor current		
Ionisation/IR probe		5 µA = 2 LED
UV tube		250 µA = 2 LED
Air proving switch		6 A, 220 V
Reset delay		none
Flame detector cable		
	Ionisation	50 m normal cable 100 m screened cable
	UV tube	100 m normal cable 200 m screened cable
UV tube	UVZ 780 blue	low sensitivity
	UVZ 780 white	medium sensitivity
	UVZ 780 red	high sensitivity
Weight incl. base		1100 g
Mounting attitude		any
Insulation standard		IP 44
Permissable ambient temp.		-20° C to +60° C incl.
Classified acc. to EN 298		BTLLXN

Model No.	32-32 sec.	63-55 sec.	43-35 sec.	13-53* sec.
Pre-purge time supervised	24	60	32	4
Pre-purge time with air damper open	30	60	40	6
Pre-ignition time fixed	3	4	4	1
Start valve safety interval	2	3	3	3
Pilot valve safety interval	3	5	3	5
Pilot valve switch on time	11	13.5	14	8
Main valve 1 safety interval	2	5	5	3
Valve 1 delay	9	10	10	6
Valve 2 delay	6	20	10	4
Post-purge	7	16	10	-

* For high-speed steam generators. Prescribed ventilation must be verified.

TECHNICAL FEATURES

1. Flame detection

The following types of flame detector can be used:
- Ionisation electrode, where the mains supply provides a neutral earth connection. Suitable for gas burners (signal current from flame cannot be influenced by interference from ignition spark).
- UV sensor type UVZ 780 red, suitable for gas, oil and dual fuel burners.
- Infra-red flicker detector type IRD 820 and 1020 for all types of burner.

The flame signal amplifier is adjusted to the the type of detector probe fitted by using the flame detector selection switch on the underside of the unit. If the IRD flicker detector is used, the selection switch must be adjusted to the "ION" position.
Flame detection is only operational when the switch position selected corresponds to the type of detector probe connected.
By optimally matching the amplifier to the detector probe, considerably longer signal transmission distances with less sensitivity to interference can be achieved.

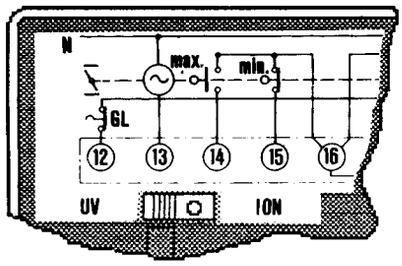

The flame signal current indicator consists of a five stage LED display which shows the signal current continuously. An indication of the strength of the flame signal current is therefore always given. Fluctuations in the monitoring sensitivity can be noticed at an early stage, and appropriate corrective action can be taken.
If the infra-red flicker detector IRD 820 or 920 is employed, the flame signal current indicator on the control box is not relevant. In this case, the IRD indicator is the decisive indication of flame signal strength.

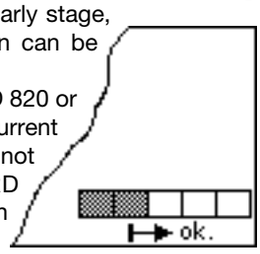

Flame signal current indicator

2. Burner Control

- Burners can be operated with or without post-purge. This varies according to model (see technical data) and is activated when the burner motor is connected to terminal 19.
- Air damper operation is monitored to ensure the nominal air volume during pre-purge and in the starting position before fuel is released. If confirmation of the damper positions "MIN" and "MAX" is not received, the control box start sequence is interrupted.
- The air proving switch is checked for corrrect operation before the start, and air pressure is monitored during pre-purge as well as during normal operation. In normal use, switch contacts with a rating of 6A/220V are sufficient. Additional switch contacts which are to be monitored can be connected between terminal 18 and the air proving switch working contact. In this case, jumper II on the underside of the control box should be cut.
- A separate connection for a pilot valve PV is provided, which is again closed at the end of the second safety interval. The heat output of the gas flow which is controlled by this valve must not exceed 120kW.
- The terminal for the start valve SV must not be used when connecting the pilot valve PV.
- Together with the start valve SV, a total of 3 power levels are available for use. The gas flow controlled by valves SV, V1 and V2 must lead to a common nozzle unit.
- To determin the heating power of the gas flow controlled by the pilot- and start valve, EN 676 has to be consulted.
- In addition to the built-in button with signal lamp, it is also possible to connect a remote lockout indicator and reset switch.
- For monitoring of the ignition spark, link 1 on the base of the control box must be cut. In this case, flame detection is carried out by a UVZ 780 ultra-violet sensor.

3. Safety

The design and programme sequence employed in the control boxes in the TMG 740-3 series conform to the presently applicable European standards and regulations. The following features exceed the requirements of most standards, and therefore ensure additional safety:
- After a normal shutdown, the stray light test is started immediatly by the control box which directs an increased voltage to the UV sensor. The very important extinguishing function of the sensor can therefore be checked. If the fuel valve does not close correctly, or a sensor or amplifier malfunction occurs, shutdown and lockout take place after approx. 20 sec., even if the controlling thermostat is open.
- The contacts responsible for the release of fuel are checked when the programme starts, to ensure that they have not become welded together.

4. Mounting and Electrical Installation

At the base:
- 3 earth terminals, with an additional tag for the burner earth.
- 3 neutral terminals, with a fixed internal through connection to the neutral input, terminal 8.
- 2 separate slide-in plates and 4 fixed, threaded knockouts (PG 11 thread) as well as a wiring opening from below, to facilitate wiring of the base.
- A keyed fit ensures that the wrong control box type cannot be fitted to the base. The corresponding control box designation is shown in lettering on the base.

General:
- Can be mounted in any position, insulated as per IP 44 standard (unaffected by water spray). The control box and detector probes should not however be subjected to excessive vibration. With the UVZ 780 ultra-violet sensor, care should be taken to ensure that a good electrical contact to the burner exists via the metal flange.
- If an ionisation electrode is used, appropriate protective measures are required in order to avoid contact with the electrode while installation work is being carried out. Trouble-free operation with this type of flame detection is not possible if a voltage of over 25 volts is measured between neutral and earth. In this case, provision must be made for a separate isolating transformer.
- The maximum lengths for the detector probe cables, depending on the type of cable installed, are listed in the technical data and must be adhered to without fail. Laying the cables parallel to mains cabling over long distances should be avoided, and the use of multiple core cable is also not permitted.

WIRING DIAGRAMS

IRD CONNECTION

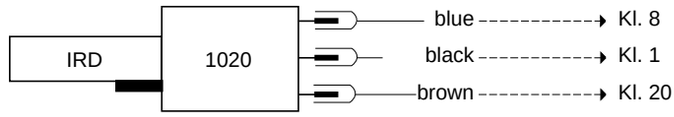

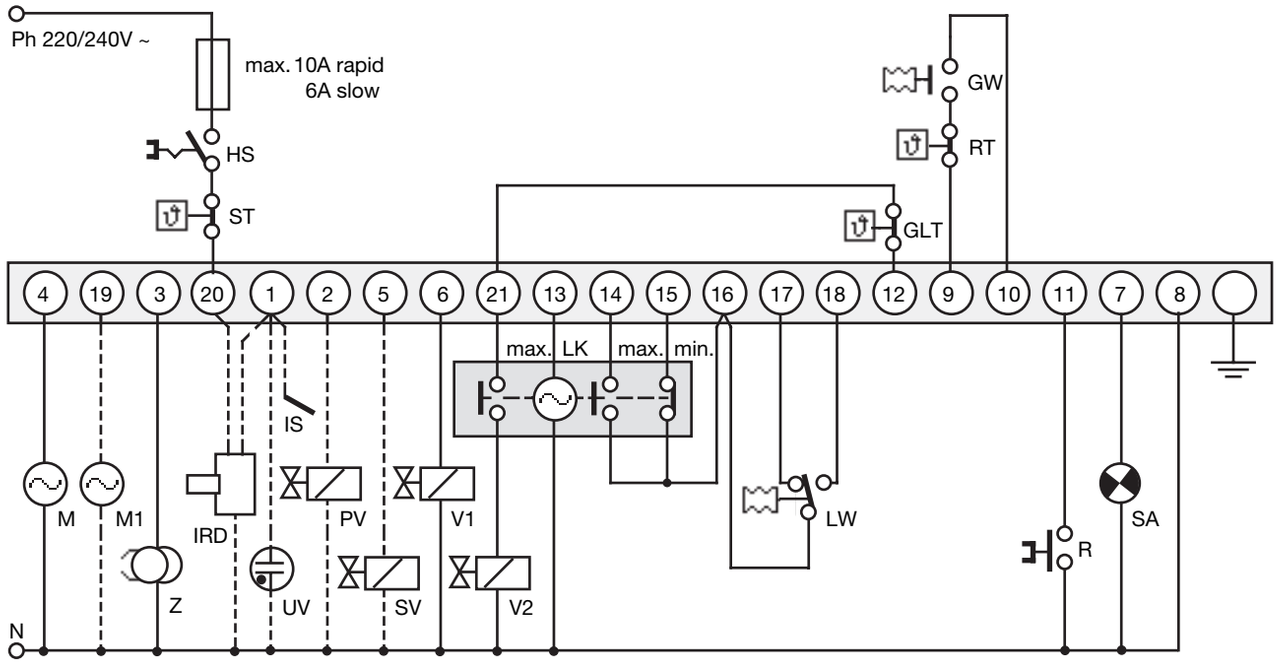

HS	Mains switch
ST	Limit thermostat
GW	Gas Pressure proving switch
RT	Control thermostat
GLT	High/low operation thermostat
M	Burner motor
M1	Burner motor for post-purge
Z	Ignition transformer
IRD	Infra-red flicker detector
UV	UV-cell
IS	Flame ionisation probe
PV	Pilot flame gas valve
SV	Start flame gas valve
V1	Main flame gas valve
V2	High flame or modulation stage gas valve
LK	Air damper motor or actuator
LW	Air pressure proving switch
R	Remote reset switch
SA	External lockout signal lamp

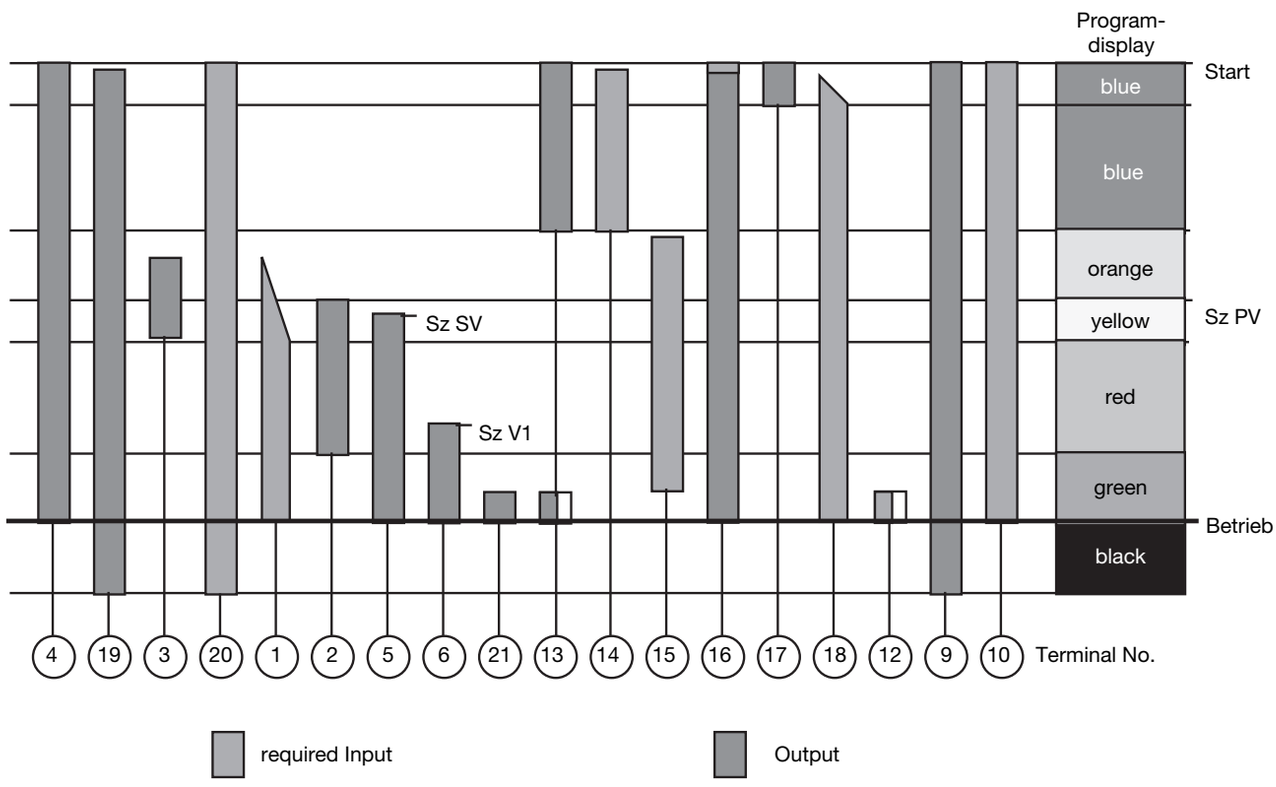

TMG 740-3

COMMISSIONING AND MAINTENANCE

1. Important

The wiring must be checked exactly when commissioning the installation. Incorrect wiring could damage the control box, putting the safety of the burner system at risk.
When mounting and wiring the control box, the applicable installation regulations must be observed.

- The chosen fuse rating must not, on any account, be higher than the value listed in the technical data.
- Failure to observe this instruction could, in the case of a short circuit, have serious consequences for the control box or burner system.
- For safety reasons, it must be ensured that the control box performs at least one normal shutdown during every 24 hour period.
- Switch off or disconnect the power before plugging in or unplugging the unit.
- Burner control boxes are safety devices and should not be opened.

2. Routine Checks

An inspection of the technical safety of the flame detection system must be carried out during commissioning of the unit as well as after servicing, or if the system has not been in operation over a long period.

For test a), the gas proving switch should be bridged.

a) Attempt to start with the hand valve closed:
   - After the first safety interval has elapsed
   -> Lockout
b) During normal operation, interrupt detector probe or cut off light:
   - In less than 1 sec.
   -> Lockout

Fault finding

Fault finding is considerably simplfied by making use of the coloured programme indicator. Irregularities during commissioning, normal operation or a normal shutdown pause can be localised via the programme indicator disc. If a malfunction occurs, it is useful to note the exact position of the indicator before operating the control switch or reset button.

The following list is designed to assist with fault finding.

COLOUR	WHERE	WHAT	REASON
BLUE	beginning	doesn't start	- no power, break in control circuit, air proving switch not in resting position
		continuous ventilation	- end switch "MAX" air damper doesn't operate
	line	lockout	- air proving switch doesn't switch over or is too late
	end	continuous ventilation	- end switch "ignition position", air damper doesn't operate
	anywhere	lockout	- stray light
YELLOW	end	lockout	- flame establishment pilot or start valve impossible no flame signal current or too weak (min. 2 LED's) flame detector selector switch set incorrectly
RED	end	lockout	- no flame signal current or too weak after end of second safety interval (double fuel feed burner)
GREEN	end	lockout	- loss of flame during operation, air pressure too low
BLACK	end	lockout	- stray light due to burning on, UVZ sensor tube reached end of life and activates shutoff, defect in flame detector circuit

A test baseplate is available for checking the burner control box functions (model designation UP 7520, item no. 18601)

BURNER 1- OR 2-STAGE

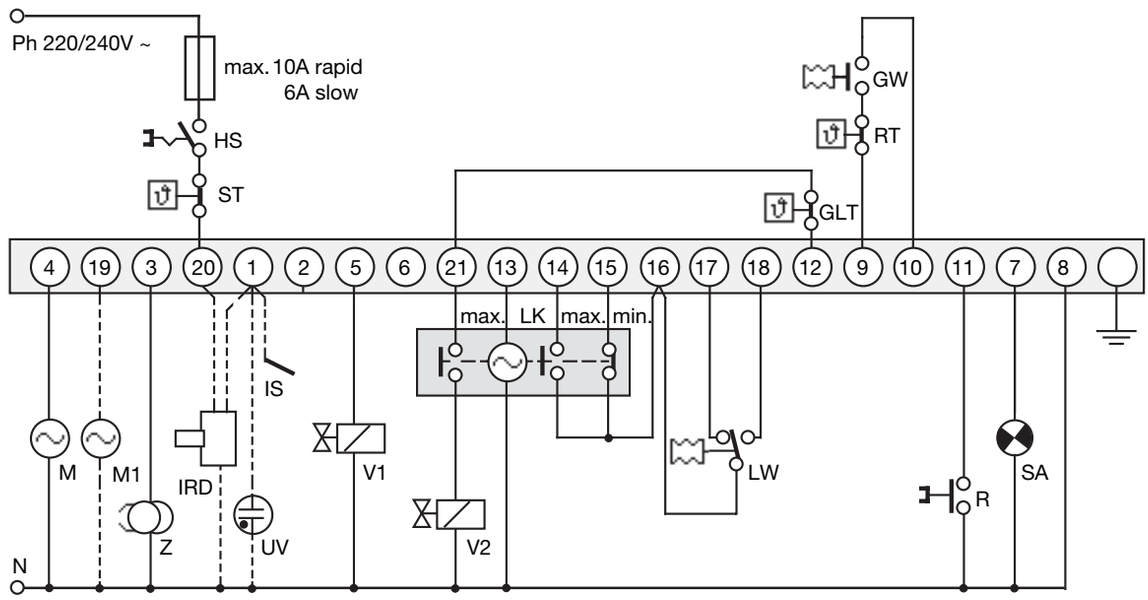

BURNER WITH START-VALVE

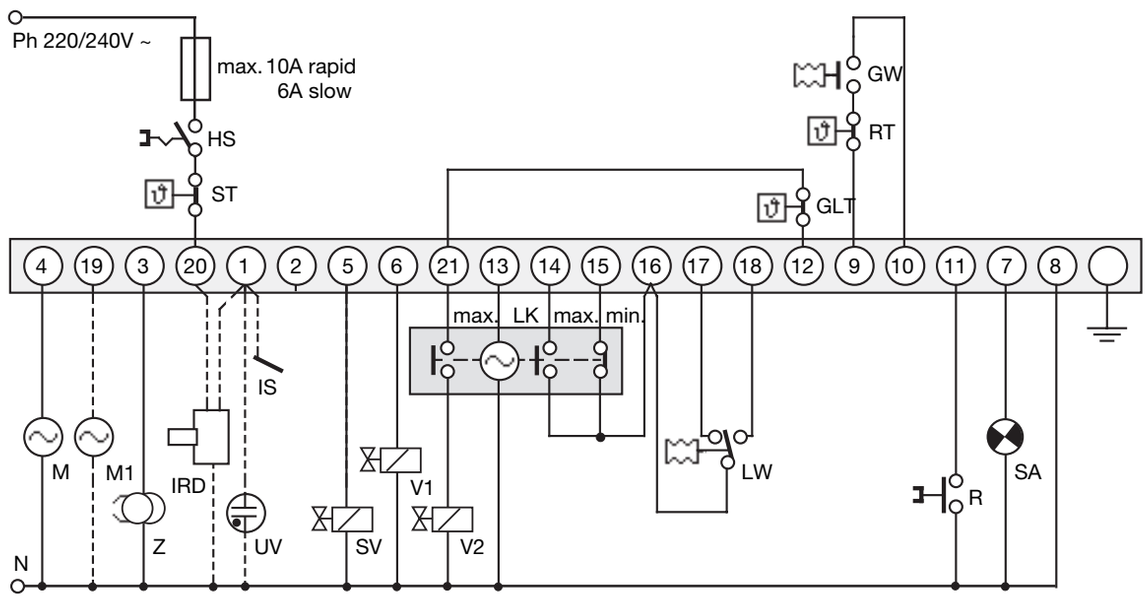

2 NOZZLE BURNER

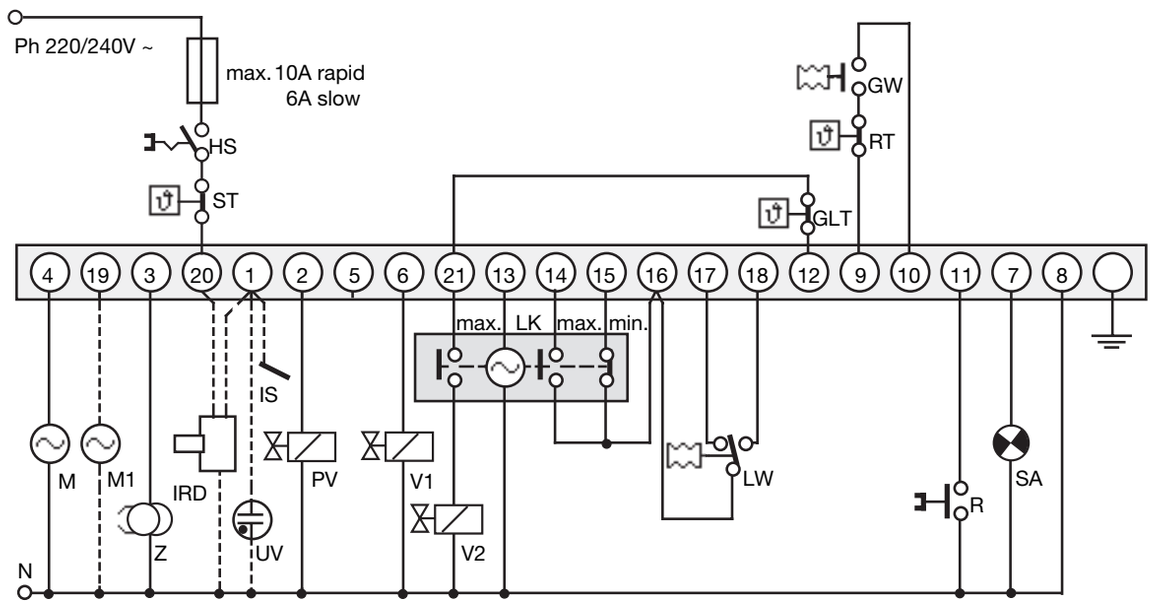

SCHEMATIC DIAGRAMM

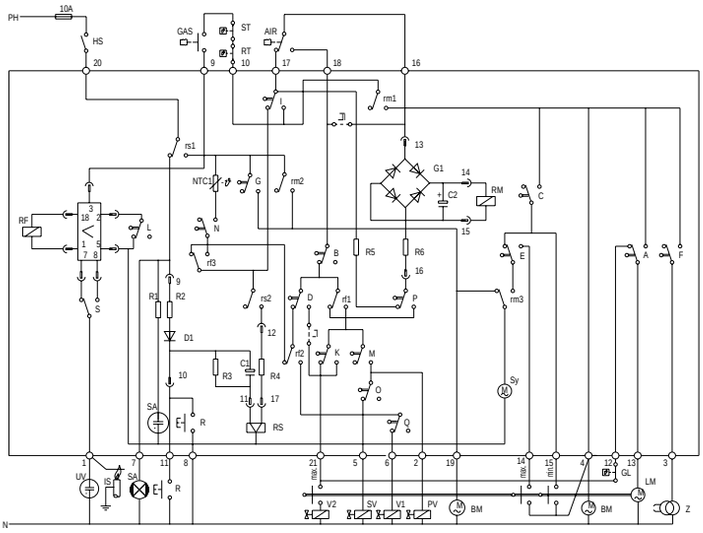

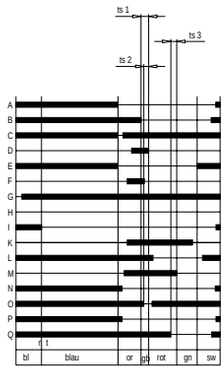

ts1 = Pilot valve safety interval
ts2 = Start valve safety interval
ts3 = Main valve 1 safety interval

I = cut for monitoring of the iguition spork
II = cut for additional switch contacts

TMG 740-3 WITH SOCKET

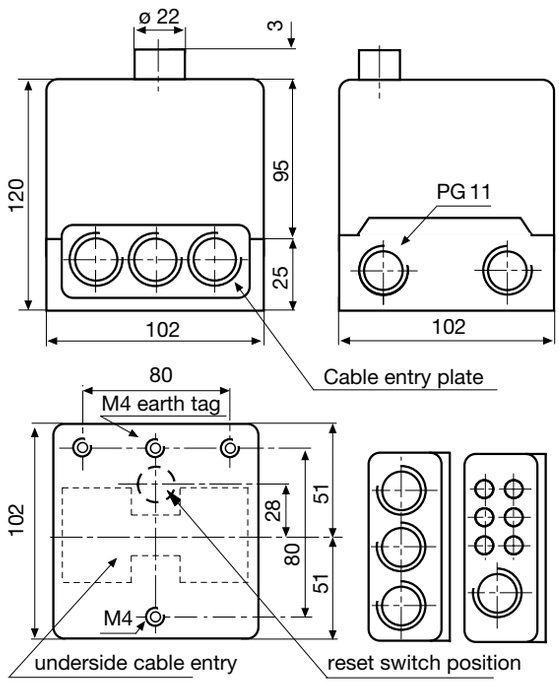

UVZ 780 WITH SUPPORT

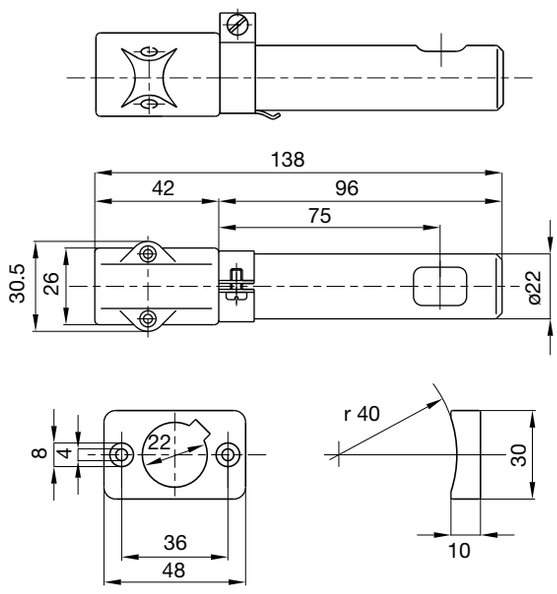

ORDERING INFORMATION

ITEM	DESIGNATION	ITEM NO.
Burner control box	Type TMG 740-3 Mod. 32-32	08211
Socket	Socket TMG	70205
Insert plate	PG-plate	70502
optional	Cable entry plate	70501
Flame detector	UVZ 780 white	18814
or	UVZ 780 blue	18812
or	UVZ 780 red	18813
Flame detector	IRD 820	16201
Flame detector	IRD 1020 end-on viewing	16522
Flame detector	IRD 1020 side-on left	16523
Flame detector	IRD 1020 side-on right	16521
IRD mounting flange	IRD Holder M93	59093
Flame detector cable	3-wire, 0.6 m	7236001

The above ordering information refers to the standard version.
Special versions are also included in our product range.

Specifications subject to change without notice.

Satronic AG
Brüelstrasse 7
Postfach 324
CH-8157 Dielsdorf

Feuerungsautomat

Für Gas- und Kombibrenner mit unbegrenzter Leistung für Dauerbetrieb geeignet.
Mögliche Flammenfühler:
- Fotoelement FZE 780
- Ionisationselektrode
- UV-Zelle UVZE 780



ANWENDUNGSBEREICH

Der Feuerungsautomat TME 780 steuert und überwacht Öl-, Gas- und Kombibrenner unbegrenzter Leistung.
Er ist zugelassen für Dauerbetrieb und bei Betrieb ohne ständige Beaufsichtigung (geprüft und zugelassen nach EN 298, EN 230 und DIN 4788, ebenfalls geprüft und zugelassen für den 72-Stunden-Betrieb nach TRD 604).

TYPENÜBERSICHT

TME 780 Mod. 32-52	allgemeine Anwendung (Klemme 5: Startventil mit 2 sec. Sicherheitszeit)
TME 780 Mod. 32-25	spez. geeignet für Ölbetrieb mit gaselektrischer Zündung (Klemme 5: Hauptventil Öl mit 5 sec. Sicherheitszeit)

AUFBAU UND KONSTRUKTION

Die Automatik ist gut geschützt in einem schwer entflammbaren, transparenten und steckbaren Kunststoffgehäuse eingebaut und beinhaltet:
- Synchronmotor mit Untersetzungsgetriebe als Schaltwalzenantrieb
- Schaltwalze mit informativer, farbiger Programmanzeige
- 16-fach Nockenschaltwerk zur Steuerung des Programmablaufs
- 2 Gleichstrom- und 1 Remanenzrelais
- Steckbare Printplatten mit Netztrafo, weiteren Relais und den elektronischen Komponenten

Auf der Geräteunterseite mit den robusten Steckkontakten kann über zwei aufschneidbare Drahtbrücken und eine Programmierlasche die Programmwahl vorgenommen werden. Folgende wichtige Anzeige- und Bedienungselemente sind auf der Frontseite des Automaten zusammengefasst:
- Leuchttaste für Störanzeige und Entriegelung
- Farbige Programmanzeige
- Schraube zur Zentralbefestigung

Eine Verschlüsselung verhindert das Einstecken eines falschen Gerätetyps in den Sockel.

TECHNISCHE DATEN

Betriebsspannung	220 / 240 V (-15... +10%) 50 Hz	
Abweichende Frequenz	ergibt proportionale Abweichung der Zeiten	
Vorsicherung	10 A flink, 6 A träge	
Eigenverbrauch	ca. 15 VA	
Max. Belastung	pro Ausgang 4 A, Total 6 A	
Luftwächterkontakt	1 Schliesser 6 A, 230 V	
Startwartezeit ca.	13 sec.	
überwachte Vorspülzeit	22 sec.	
Vorzündzeit	30 s. Öl resp. 1,6 s. Gas	
Sicherheitszeiten	Mod. 32-52	Mod. 32-25
- Pilotventil Klemme 2	5 sec.	5 sec.
- Ventil Klemme 5	2 sec.	5 sec.
- Ventil Klemme 6	2 sec.	2 sec.
Einschaltzeit Pilotventil	11 sec.	
Verzögerung Ventil 2 resp. Freigabe Leistungsregulierung	2 sec.	
Nachbelüftung	8 sec. (Motor auf Kl. 19)	
Wartezeit nach Störabschaltung	keine	
Leitungslänge Flammenfühler:		
- Ionisationsüberwachung	max. 20 m	
- UVZE 780	max. 10 m	
separat, abgeschirmt	max. 100 m	
- FZE 780 separat, verlegt	max. 10 m	
separat, abgeschirmt	max. 100 m	
UV-Zelle für alle Brenner	Typ UVZE 780	
Fotozelle für Ölbrenner	Typ FZE 780	
Zugelassene Umgebungstemperatur für Gerät und Fühler	-20° C... +60° C	
Schutzart	IP 44	
Einbaulage	beliebig	
Gewicht Gerät mit Sockel	ca. 1200 g	
UVZE 780 mit Kugelhalter	ca. 670 g	
Klassifizierung nach EN 298	BBLLXK	

ANWENDUNGSTECHNISCHE MERKMALE

FLAMMENÜBERWACHUNG

Die periodische Selbstüberprüfung der Flammenüberwachungseinrichtung erstreckt sich bis einschliesslich Starkstromkontakt für die Brennstofffreigabe. Die Taktzeit beträgt ca. 240 sec. Die Flammenüberwachung kann wahlweise mit UV-Zelle UVZE 780, Ionisationssonde(n) oder Fotoelement FZE 780 erfolgen. Innerhalb der Überwachungsperioden wird die Ionisationselektrode bzw. das Fotoelement weggeschaltet, während die UV-Diode abgedunkelt wird. Steht in dieser Überwachungsperiode, bedingt durch einen Bauteilefehler, trotzdem ein Flammensignal an, so erfolgt eine Störabschaltung und Verriegelung während des Betriebes.

Beschreibung des fehlersicheren Prüfvorganges

1. Normaler Anlaufvorgang bis zur Betriebsstellung d.h. bis zur ordnungsgemässen Flammenbildung. Relais RM in Selbsthaltung.
2. Flammenrelais RF zieht an und trennt Kondensator C1 von der Speisung.
3. Die Entladung von C1 bewirkt nach ca. 240 sec. den Anzug des Überbrückungsrelais RÜ und das Abfallen des Unterbrecherrelais RT. RM erhält Speisung von Kondensator C2.
4. Relais RÜ überbrückt den Kontakt f2 für die Ventilspeisung und verhindert gleichzeitig eine Störauslösung beim nachfolgenden Abfall des Flammenrelais RF.
5. Relais RT trennt die Ionisationssonde resp. das Fotoelement FZE vom Verstärker ab und bewirkt die elektromagnetische Abdunkelung der UV-Röhre in der UVZE.
6. Bei richtiger Funktionsweise muss nun das Flammenrelais RF abfallen, Kondensator C1 wird wieder geladen.
7. Relais RT zieht wieder an. Die Flammenfühler werden wieder mit dem Verstärker verbunden und die Blende in der UVZE öffnet.
8. Das Flammenrelais RF zieht an, Relais RÜ fällt ab und der Entladevorgang von Kondensator C1 beginnt von neuem. Der nächste Prüfzyklus folgt in ca. 240 sec.

Falls beim Prüfvorgang das Flammenrelais RF nicht abfällt, bleiben die Relais RÜ und RT in Prüfposition stehen. Als Folge fällt das Betriebsrelais RM nach der Entladung von Kondensator C2 ab, und es ergibt sich eine Störauslösung über die Kontakte m2, f4 (angezogen) und ü3.

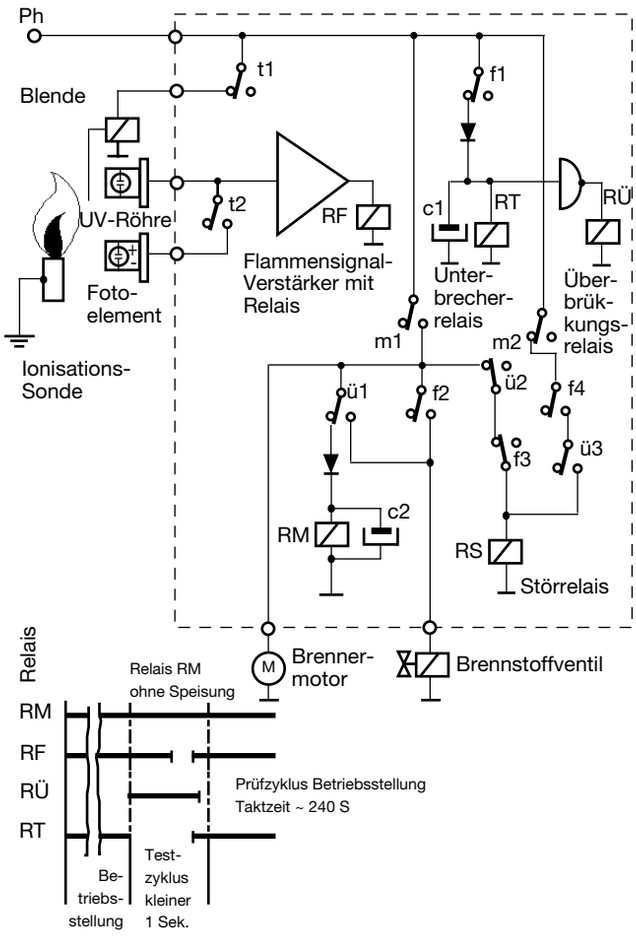

FOTOELEMENT TYP FZE 780

Der Lichtfühler Typ FZE 780 enthält ein Silizium-Fotoelement, welches bei Auftreffen von Tageslicht eine elektrische Spannung abgibt. Die höchste Spektralempfindlichkeit dieses in einem Glaskolben eingeschmolzenen Elementes liegt bei 620 nm. Das Fotoelement FZE 780 eignet sich somit zur Überwachung von Ölbrennern, welche mit einer leuchtenden Flamme brennen.

Technische Daten

Einsatz	axial und radial
Spektralbereich	400… 700 nm
Empfindlichkeit	besser 50 Lux
Überwachungsstrom	min. 2 µA bis max 8 µA
Umgebungstemperatur	max. 60° C

Anschluss

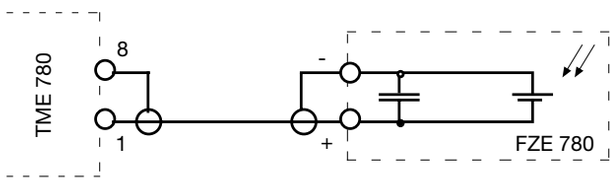

- Die Zuleitung zum TME muss immer separat verlegt und bei einer Länge von mehr als 10 m abgeschirmtes Kabel verwendet werden. Leitungslänge max. 100 m.
- Die Abschirmung ist einerseits an der Minus-Klemme der FZE 780 und andererseits an der Klemme 8 im Steuergerätesockel anzuschliessen.
- Der Minuspol der FZE 780 muss immer direkt mit der Klemme 8 im Steuergerätesockel verbunden werden. Der Anschluss an andere Mp-Leitungen der Brennerverdrahtung kann Störungen verursachen.

IONISATIONSÜBERWACHUNG

Technische Daten

Empfindlichkeit Verstärker	<1 µA
Überwachungsstrom	min. 5 µA
Streukapazität Sonde-Masse	<1000 pF (bei ca. 20 m Leitungslänge)
Sondenisolation	>50 MΩ
Sondenmaterial	temperaturfest (Material wie Zündelektrode)

Zu beachten

- Einwandfreie Erdung des Brenners, die Spannung zwischen Nulleiter und Erde darf nicht grösser als 25 V sein, Phasen- und Nulleiteranschluss beachten.
- Ionisationselektrode muss in der Reaktionszone der Flamme liegen.
- Zündelektrode(n) dürfen nicht in die Flamme eintauchen und müssen möglichst weit entfernt sein.
- Hochspannungskabel (Zündung) und Ionisationskabel dürfen nicht parallel geführt werden.
- Flammenwurzel darf bei allen Verbrennungsbedingungen nicht von der Staueinrichtung abheben.

UV-ÜBERWACHUNGSSYSTEM TYP UVZE 780

In diesem Flammenfühlertyp ist eine Ultraviolett-Fotozelle eingebaut, die es erlaubt, elektromagnetische Strahlung aus dem ultravioletten Teil des Spektrums zu überwachen.

Die Überwachungsart mit einer Ultraviolett-Fotozelle ist aus bekannten Gründen nicht fehlersicher. Zur Prüfung des Zünd- und Löschverhaltens der UV-Zelle in der UVZE 780 wird deshalb eine periodische Abdunkelung vorgenommen. Diese wird über einen sehr leistungsfähigen Magnetantrieb (100% ED) bewerkstelligt und deckt gleichzeitig die axiale und radiale Lichteinfallöffnung ab. Die von einem Taktgeber im Steuergerät angesteuerte Abdunkelung erfolgt alle 240 sec., wobei die "Dunkelphase" weniger als 1 sec. dauert (Abmeldezeit-Verstärker). Magnetantrieb und Abdeckmechanismus sind staubdicht eingebaut und absolut wartungsfrei. Die UVZE 780 enthält desweiteren eine mechanische Empfindlichkeitseinstellung, mit welcher die beiden Lichteinfallöffnungen stufenlos verändert werden können. 2 Messbuchsen mit selbsttätiger Unterbrechung gestatten eine sehr einfache und rasche Kontrolle des UV-Stromes.



Technische Daten

Einsatz	axial und radial
Spektralbereich	190… 270 nm
Empfindlichkeit axial	min. 0,5 m Kerzenflamme
Empfindlichkeit radial	min. 0,5 m Kerzenflamme
Überwachungsstrom	min. 0,7 mA bis max. 1,0 mA
Umgebungstemperatur	max 60° C
Schutzart	IP 41
Eingebaute UV-Zelle	P 607 Sylvania

Anschluss

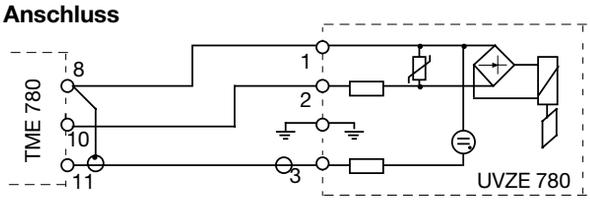

- Die Zuleitung zur UVZE 780 muss immer separat verlegt werden.
- Bei einer Leitungslänge von mehr als 10 m muss für die Signalleitung separat abgeschirmtes 1-poliges Kabel verwendet werden. Leitungslänge max. 100 m. Die Abschirmung ist dabei direkt mit Klemme 8 im Steuergerät zu verbinden.

EINSTELL- UND MESSMÖGLICHKEIT UVZE 780

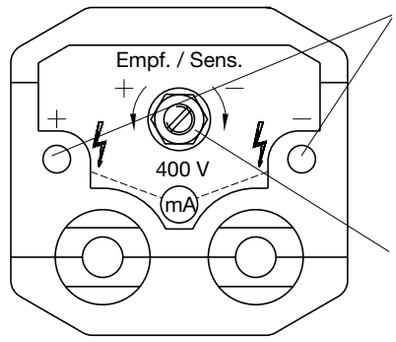

Die generelle Ausrichtung der UVZE 780 für optimalen Lichteinfall wird mit dem mitgelieferten Kugelhalter vorgenommen. Dieser erlaubt ein allseitiges Schwenken der Fühlerachse um ±18°. Beim Ausrichten der axial eingebauten UVZE 780 ist wie folgt vorzugehen:

- Anschluss eines Messinstrumentes mit einem Messbereich von 0… 1 mA (z.B. Ionimeter Bereich 1 mA)
- Ungefähres Ausrichten der UVZE von Auge.
- Stellschraube für die Empfindlichkeitsverstellung in Richtung weniger (-) drehen, bis ein UV Strom von ca. 0,5 mA gemessen wird.
- Ausrichten der Zelle auf max. Ausschlag des Messinstrumentes.
- Stellschraube Empfindlichkeitsverstellung (bis zum Anschlag) in Richtung mehr (+) drehen und Kontermutter festziehen.

Bei einer radial eingebauten UVZE 780 kann in der Regel das oben genannte Vorgehen weggelassen werden. Hier genügt in den meisten Fällen das Ausrichten der Zelle von Auge und eine anschliessende Kontrolle des UV-Stromes mit dem Messinstrument.

Zu beachten

Der Anschluss des Messinstrumentes muss über 4 mm Stecker (Bananen-od. Büschelstecker) vorgenommen werden, da anderenfalls die Schaltbuchsen nicht funktionieren. Die Messbuchsen führen eine Spannung von 400V gegen Masse. **ACHTUNG LEBENSGEFAHR**

PROGRAMMWAHL TME 780 (AN GERÄTEUNTERSEITE)

1. Kurze oder lange Vorzündung Brücke III.
   Mit Brücke Vorzündung lang, dh. über die gesamte Vorspülzeit für Ölbetrieb. Ohne Brücke Vorzündung kurz, dh. Einsatz nach abgelaufener Vorspülzeit und Rückmeldung des Luftklappen MIN-Stellung. Die Vorzündzeit vor dem Öffnen des Pilotventils beträgt 1,6 sec.
2. Mit oder ohne Zündfunkenüberwachung Brücke IV.
   Mit Brücke keine Zündfunkenüberwachung. Ohne Brücke Zündfunkenüberwachung, dh. die Freigabe der Brennstoffventile erfolgt nur bei vorhandenem Zündfunken. Eine Zündfunkenüberwachung ist nur bei Betrieb mit der UVZE 780 möglich. Der Zündfunke muss dabei im Sichtbereich der UV-Zelle liegen.
3. Externe Stör- oder Betriebsanzeige Programmierlasche.

Spannung an Klemme 7 wenn Gerät auf Störung

Spannung an Klemme 7 wenn Gerät nicht auf Störung

INBETRIEBNAHME UND UNTERHALT

- Verdrahtung genau nachprüfen, Fehlverdrahtungen können Gerät und Flammenfühler beschädigen sowie die Sicherheit der Anlage gefährden.
- Bei Montage und Verdrahtung sind die einschlägigen Installationsvorschriften zu beachten. Die angegebenen Kontaktbelastungen dürfen nicht überschritten werden.
- Die Vorsicherung ist so zu wählen, dass die unter den technischen Daten angegebenen Grenzwerte keinesfalls überschritten werden.
- Gerät nur spannungslos ein- und ausstecken.
- Feuerungsautomaten sind Sicherheitsgeräte und dürfen nicht geöffnet werden.
- Bei Brennern mit Ionisationsüberwachung Spannung zwischen Erde und Mp messen. Ist diese grösser als 25 V, muss ein Trenntransformator vorgesehen werden.
- Genaue Funktionskontrolle ohne Gas vornehmen. Der Gaswächter ist für diese Prüfung zu überbrücken.
- Man vergewissere sich speziell, ob Klemme 20 auch Spannung führt, wenn Thermostaten oder andere Begrenzungselemente ausgeschaltet sind. Dies ist für die Sicherheit der Flammenüberwachung wichtig.
- Das Gerät benötigt keinerlei Unterhalt und darf auch nicht geöffnet werden.
- Die Flammenfühler sollten periodisch auf Sauberkeit der Lichteinfallöffnungen kontrolliert werden. Schmutz und Staub vermindern die Menge des einfallenden Lichtes und führen zu Störabschaltungen.
- Es wird empfohlen, allfällige Reservegeräte und Reservefühler vierteljährlich einzusetzen. Damit soll sichergestellt werden, dass diese voll funktionsfähig sind und eventuelle negative Einflüsse durch jahrelange Lagerzeit vermieden werden.
- Bei Ansprechen des Luftwächters während des Brennerbetriebs erfolgt ein kompletter Neuanlauf.

FEHLERSUCHE

Brenner läuft nicht an, Programmanzeige Anfang blau
- Verdrahtung und Sicherung kontrollieren
- Keine (oder zu tiefe) Spannung an Klemme 9 und 20
- Luftwächterkontakt nicht offen

Brennermotor läuft, Programmanzeige Anfang blau, Dauerlüftung
- Keine Rückmeldung Luftklappen MAX-Stellung
- Rückmeldung Luftklappen MAX-Stellung unterbrochen

Störabschaltung im Sektor blau
- Fremdlicht während der Vorspülzeit
- Luftdruckmangel, Luftdruckwächter

Programmstop zwischen blau und orange, Dauerlüftung
- Keine Rückmeldung Luftklappen MIN-Stellung

Störabschaltung im Sektor orange
- Fremdlicht

Störabschaltung zwischen dem Sektor orange und gelb
- Brücke für Zündfunkenüberwachung (IV) aufgeschnitten, aber keine Überwachung möglich da FZE oder Ionisationssondenbetrieb.
- UVZE "sieht" den Zündfunken nicht

Störabschaltung zwischen gelb und rot ohne Flammenbildung
- Keine Zündung oder kein Brennstoff

Störabschaltung zwischen gelb und rot mit Flammenbildung
- Kein Flammensignal
- Falsche Verdrahtung Flammenfühler
- Brenner bei Ionisationsüberwachung nicht geerdet

Störabschaltung im Sektor rot
- Zu geringes Flammensignal, verschmutzte Fühler

Störabschaltung zwischen gelb und grün
- Hauptflamme zündet nicht bei Pilotventil-Betrieb

Störabschaltung zwischen grün und weiss
- Flammenabriss aus Betriebsstellung
- Zu geringes Flammensignal, verschmutzte Fühler
- Störimpulse auf der Flammenfühlerleitung
- Abdunkelung der UVZE funktioniert nicht (Prüfzyklus alle 100 sec.)

PROGRAMMABLAUF TME 780 MOD. 32-52

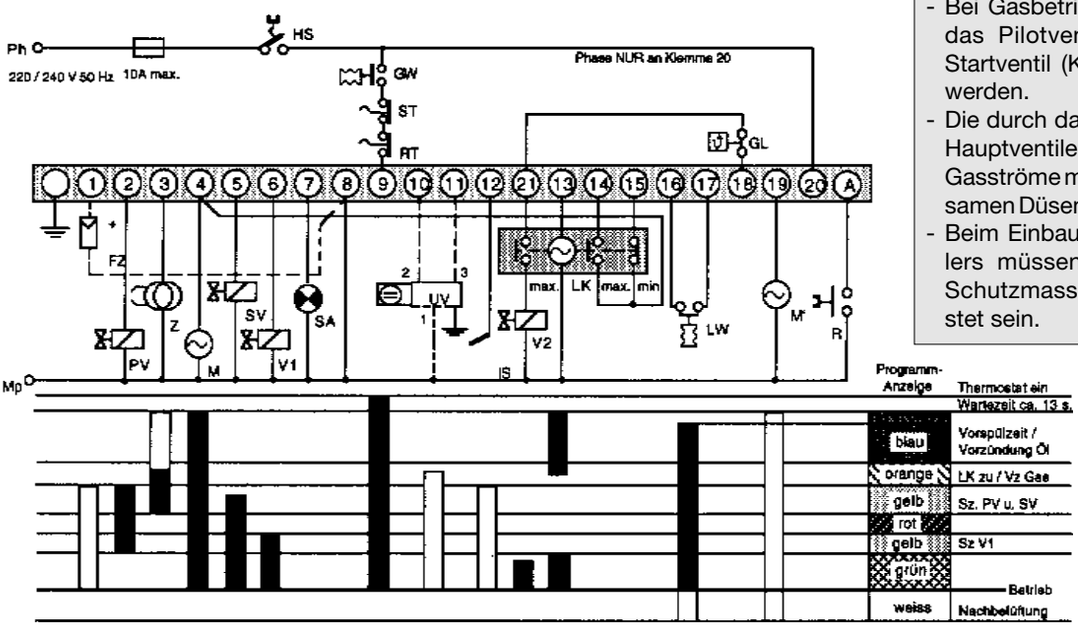

ACHTUNG
- Bei Gasbetrieb darf entweder nur das Pilotventil (Kl.2) oder das Startventil (Kl. 5) angeschlossen werden.
- Die durch das Startventil und die Hauptventile 1 und 2 gesteuerten Gasströme müssen einer gemeinsamen Düsenkammer zuströmen.
- Beim Einbau des Ionisationsfühlers müssen die erforderlichen Schutzmassnahmen gewährleistet sein.

TME 780 MOD. 32 - 52

Ölbetrieb:
Überwachung: FZE / UVZE

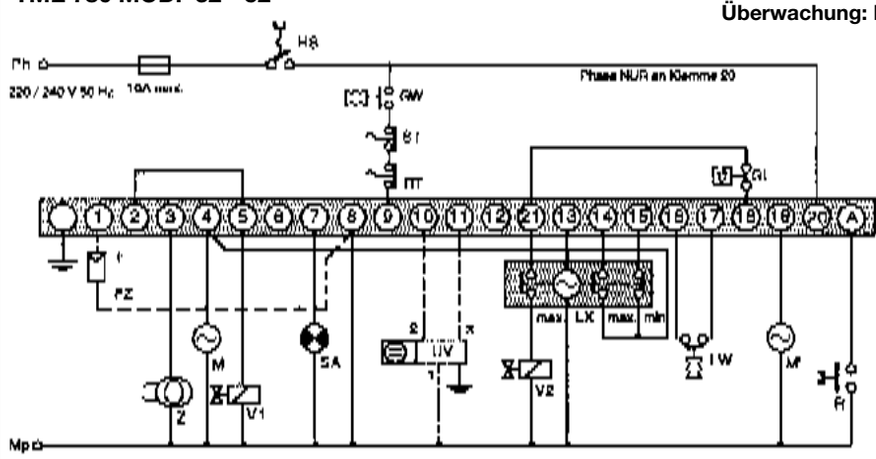

TME 780 MOD. 32 - 25

Ölbetrieb: gaselektr. Zündung
Überwachung: Pilotventil / Ionisationssonde
Ölventil FZE

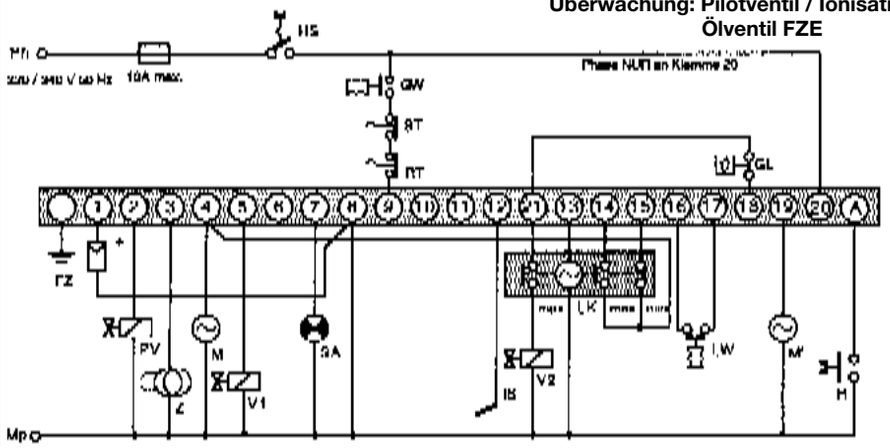

TME 780 MOD. 32 - 52 / MOD. 32 - 25

Gasbetrieb: Pilotventil
Überwachung: Ion-Sonde / UVZE

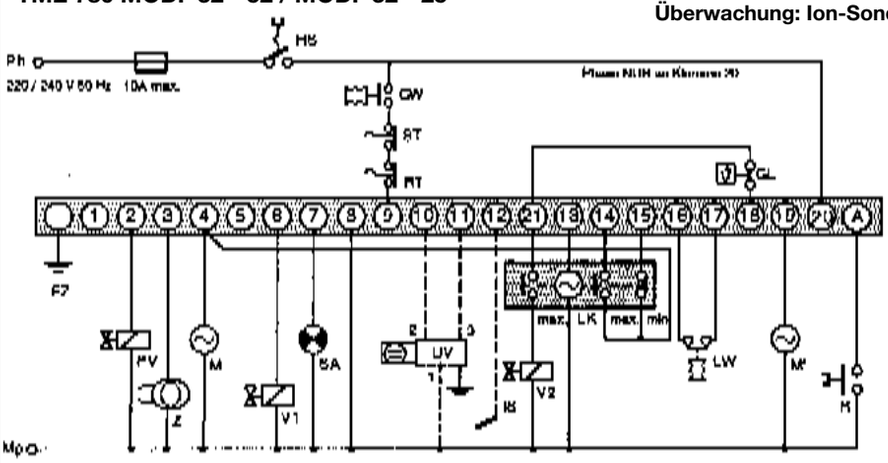

HS	Hauptschalter
GW	Gaswächter
FZ	Fotoelement Typ FZE 780
UV	UV-Detektor Typ UVZE 780
IS	Ionisationssonde
PV	Pilotventil
SV	Startventil
V1	Hauptventil 1
V2	Grosslastventil 2
SA	Anzeige "Störung" oder "keine Störung"
R	Entstörung
ST	Sicherheits-thermostat
RT	Regelthermostat
GL	Grosslast-thermostat
Z	Zündung
LK	Luftklappenantrieb
LW	Luftwächter
M	Brennmotor
M'	Brennermotor - Nachlüftung

TME 780 MOD. 32 - 52

Gasbetrieb: Funkenzündung
Überwachung: Ion-Sonde / UVZE

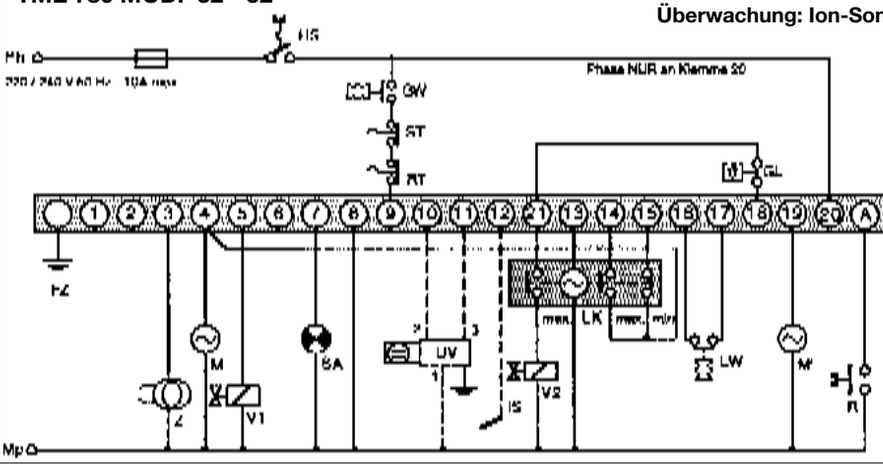

TME 780 MIT SOCKEL

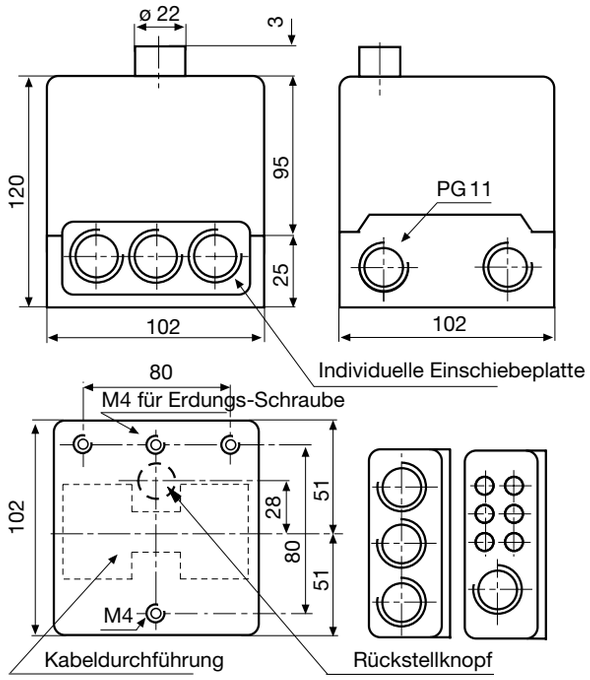

FZE 780 MIT HALTER

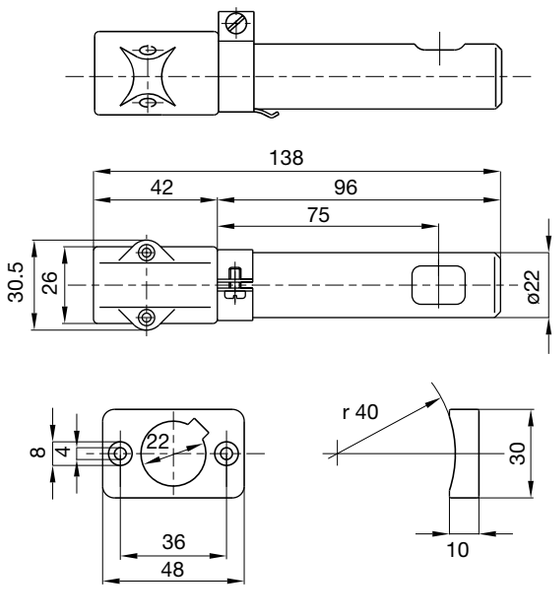

UVZE 780

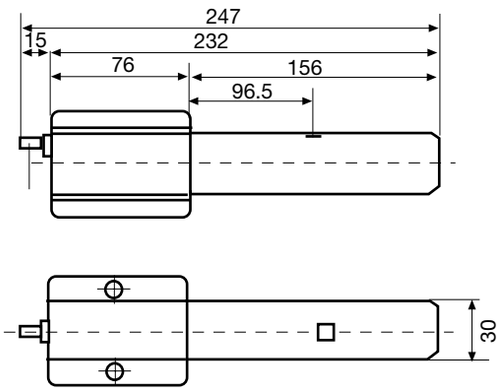

KUGELHALTER

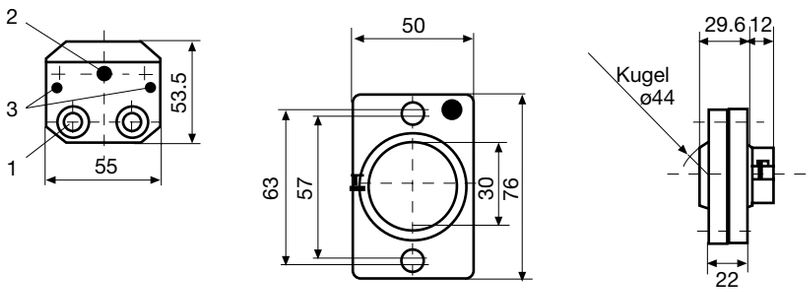

1 PG-Anschluss
2 Empfindlichkeiteinstellung, Einstellwinkel ±18 °
3 Strommessung (UV)

BESTELLANGABEN

ARTIKEL	BESTELLTEXT	ART. NR.
Steuergerät	Typ TME 780 Mod. 32-52	08801
wahlweise	Typ TME 780 Mod. 32-25	08803
Sockel	Sockel TME	70220
Einschiebeplatte 2x	PG-Platte	70502
wahlweise	Kabelklemmplatte	70501
Flammenfühler	UVZE 780	18815
wahlweise	FZE 780	18238
Halter zu Flammenfühler	Halter zu UVZE	18808
wahlweise	Halter zu FZE	18807

Obige Bestellangaben beziehen sich auf die Normalausführung.
Das Verkaufsprogramm umfasst auch Spezialausführungen.

Technische Änderungen vorbehalten.

Satronic AG
Brüelstrasse 7
Postfach 324
CH-8157 Dielsdorf

Control box

The SGU 930 and SGU 930i control boxes are suitable for oil, gas and dual-fuel burners of high firing rates. The SGU 930i has a micro-processor controlled information system with a serial interface.
Methods of flame detection include:
- flame ionisation rod
- U-V detector cell
- Infra-red flicker detector

INTRODUCTION

The SGU 930 and SGU 930i control boxes have been designed to control and supervise single, two-stage and modulating burners on oil, gas or dual-fuel applications. They comply with the European standards EN 230 and EN 298 and can be fitted on burners with unlimited firing rates and also on direct-fired air heaters.
The communications feature of the information system of the SGU 930i gives the option of a link-up with a personal computer (PC) or a remote building management system.

CONSTRUCTIONAL FEATURES

The SGU 930 and SGU 930i are completely new designs. They combine the most up to date mechanics for the safety features together with electronic components. The SGU 930i works in conjunction with a microprocessor controlled information system. It not only reports on the actual state of the control box, but can also store data on previous lock-outs. With the same dimensions as the earlier TM series of burner controls, the SGU 930 and SGU 930i contain the following design features and functions:
- 24 unit mechanical cam switch assembly and 4 relays for fail save functions
- flame signal LED display
- wiring base with 44 screw type terminals
- programmable functions, with underside wiring links in the base
- 2-wire control for 3 position air damper motor
- extendible safety interlock circuit and remote lockout option
- replaceable internal fuse
- separate start circuit for proof of closure switches

additional at SGU 930i:
- microprocessor controlled Information system with serial interface
- dual colour LED visual information display
- cycle time supervision for air damper motor
- microprocessor supervised safety times and hours of operation counter



TECHNICAL DATA

supply voltage*		220/240 V (-15... +10%) 50 Hz (40 - 60 Hz)
frequency variations		timings will vary in prop. to supply frequency
power consump. SGU 930/930i		10 VA/12 VA approx.
built-in fuse		T6.3 / 250, DIN 41571
external fuse		16 A max.
max. current rating per output terminal:		
- term. 18 + 19 ign. trafo		2A, cos φ 0.2
- term. 16 + 17 fan motor rated output:		2A, cos φ 0.4 P2 approx. 450 W max.
- term. 20, 21, 22, 23 solenoid valves		1A, cos φ 0.4
- term. 25, 26, 27 damper		1A, cos φ 0.4
- term. 6		1A, cos φ 0.4
total load		6 A
air proving switch contacts		changeover 230 V contact rating ca. 10 mA
reset time from lockout		none
ambient temperature		-20° C... +60° C
mounting attitude		any
insulation stand. SGU 930/930i		IP 44 / IP 43
flame signal display		5 red LEDs
sensitivity of flame-amplifier		1.6 µA... Ionisation 70 µA... UV cell
min. flame current	Ion/IRD	6 µA = 2 LED on flame signal display
	UV-cell	250 µA = 2 LED on flame signal display
max. wiring length to flame detectors	Ion/IRD	50 m standard cable 100 m screened cable
	UV-cell	100 m standard cable 200 m screened cable
flame detectors	Ion	ionisation rod
	IRD	IRD 1020
	UV	UVZ 780 red, white, blue

* also available for 110/120 V.

Programme timing Model 33-33	secs.
pre-purge time supervised	30
pre-purge time with open air damper	37
response time for air-proving switch	9
pre-ignition time (short)	3.5
pre-ignition time (long)	46
safety time, pilot valve	3
safety time, start valve	3
safety time main valve	3
time to lockout during operation	<1
activated time of pilot	11
delay time to valve 1	9
delay time to valve 2	6
post-purge	8.5





APPLICATION FEATURES

1. Information system – SGU 930i

The information system for the SGU 930i is controlled by a microprocessor. It is designed to report on every aspect of the burner control box's operation and on flame supervision. It records continuously every function of the control box. In the case of a lock-out, it offers a fault diagnosis and also stores the number of lock-outs which occur. The information is conveyed by means of an LED display and a serial interface. The micro-processor is used only for information purposes and is not connected with the safety functions of the control box. All signals which are checked by the information system are electrically isolated from the remainder of the control box circuit.

1.2. Reconstruction of the cycle and lockout-diagnosis

The information system uses certain signals of the control box to reconstruct the programme cycle. The system measures these signals at every stage of the cycle, checks them and decides if the next stage of the programme cycle has been reached.

1.3. Report

The programme cycle is observed and recorded continuously by the information system. As soon as a new stage is reached, a message is passed through the serial interface. The report line contains the time between "thermostat ON" and the function, the input and output signals, the strength of the flame signal in percentages (refer to 2.1) and a comment in simple language. The report lines for the lockouts are the same.

1.4 Report line format

Title.
Is printed when control thermostat switches on

```
          F L M S V  Flame   Cycle
h :m :s    T I H P L Signal  step
-------------------------------------
hh:mm:ss .|..|..... F xx%   Text        reportline
hh:mm:ss
```

`h :m :s`	hours :minutes :secondes – since Controlthermostat on
`.|..|.`	Input/Output signals
`|`	signal valid (e.g. thermostat is switched on)
`.`	signal not valid (e.g. thermostat is switched off)
`F`	flame relay
`T`	control thermostat
`L`	air proving switch
`I`	safety relay
`M`	synchronous motor
`H`	main relay
`S`	lockout relay
`P`	pilot valve
`V`	main valve 1
`L`	high flame thermostat
`F`	flame signal in xx% of max. current
`Text`	programme stage or lockout in simple language

1.5 Report line examples

```
         F L M S V
          T I H P L
00:00:16 .|||||.... F: 00%      pre-purge
00:00:46 .|||.|.... F: 00%      LK running
00:00:48 .|||||.... F: 00%      LK at min
00:00:54 .||||||.|. F: 00%      ts 1 PV/SV
```

1.6 LED Display

Together with the report, a code is given to the LED display. This gives a visual display of which stage the programme has reached or where lockout has occurred. The dual-coloured LED display can show 11 different programme stages and 10 different lockout causes. The lockout display is retained until the control box is reset, whether locally or remotely.

1.7 Lockout memory

The causes for a lockout are stored in the lockout memory. The last 8 lockouts are retained in this memory. They are stored in a non-volatile EEPROM even after power is switched off. The information is transmitted through the serial interface by the following means:
- reset of the information system by the reset button
- a request via the serial interface from a test base, PC, etc.

1.8 Format of a lockout line

```
1. lockout   in Program part
   Time hh:mm:ss cycle nr. xx
```

lockout	reason for the lockout in simple language
programme stage	programme stage at which the lockout occurred in simple language
hh:mm:ss	hours, minutes, seconds of the occurrence of the lockout since the beginning of the particular programme stage
xx	number of completed cycles before lockout occurred

1.9 Print-out examples from the lockout memory

```
1. stray light    in pre-purge
   time 00:00:11  Cycle No.    128
2. LW closed      in RT on
   time 00:00:04  Cycle No.    109
```

The lockouts are stored in the memory so that the most recent lockout is printed on the top line, etc.

1.10 Additional information

Besides the record of the programme and the lockouts, the information system supplies additional details about the performance of the burner. They are transmitted through the serial interface on command.

a) delay time in operation of air proving device (sec.)
b) damper running time until max. position is reached (min.sec.)
c) damper running time until min. position is reached (min.sec.)
d) usage of the safety time, delay in flame establishment (sec. 1/10 sec.)
e) operation time for stage 1 (h.min.)
f) operation time for stage 2 (h.min.)
g) operation time of the control box (h.min.)
h) number of programme cycles
i) number of lockouts

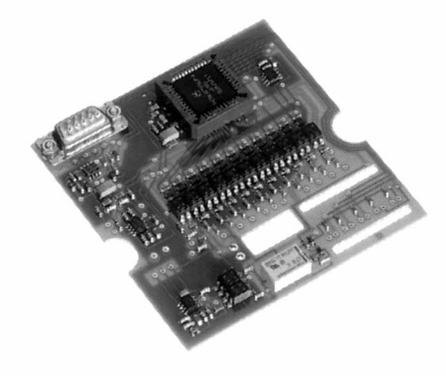

1.11 Print-out example

```
SGU INFORMATION SYSTEM
VERSION 1.0.4


Auxiliary information:
LW switch time (sec):     20
LK cycle time  (min):      1.11
LK cycle time  (min):      0.18
Ignition delay (sec):      1.60
Hrs. low flame      :      1.11
Hrs. High flame     :      1.31
Hrs. control box    :      3.30
No. of cycles       :     38
No. of lockouts     :     29

Lockout information:
1. Flame out     in Low flame
   Time 00:01:08 Cycle No.      38
2. LW open       in SI relay on
   Time 00:00:01 Cycle No.      37
3. LK failure    in LK running
   Time 00:00:29 Cycle No.      36
4. LW open       in SI relay on
   Time 00:00:15 Cycle No.      34
5. No flame      in End ts 1
   Time 00:00:01 Cycle No.      33
6. LK failure    in LK running
   Time 00:00:42 Cycle No.      32
7. Flame out     in Low flame
   Time 00:00:05 Cycle No.      31
8. LW open       in Pre-purge
   Time 00:00:02 Cycle No.      30

00:00:00 ..|..... F: 00% Synch
00:00:00 ..|..... F: 00% RT off

         F L M S V  Flame   Cycle
h :m :s   T I H P L signal  step
-------------------------------------
00:00:09 .||.|..... F: 00% RT on
00:00:02 .|..||.... F: 00% H relay on
00:00:08 .|...|.... F: 00% LK running
00:00:23 .||.||.... F: 00% LK at max.
00:00:28 .|.|||.... F: 00% SI relay on
00:00:29 .|||||.... F: 00% Pre-purge
00:00:29 .|||.|.... F: 00% LK running
00:01:01 .|||||.... F: 00% LK at min.
00:01:23 .||||||.|. F: 00% ts 1 PV/SV
00:01:29 ||||||.|.. F: 00% End ts 1
00:01:32 ||||||.||. F: 73% ts 2 V1
00:01:38 ||||||..|. F: 78% End ts2
00:01:40 ||||.|..|. F: 77% Low flame
00:02:46 |.|||..... F: 77% Post-purge
```

1.12 Supervision functions

The microprocessor in the information system is also used to carry out the following additional supervisory functions:
a) supervision of the damper running time, and cause lock-out after >100 sec.
b) supervision of the cam assembly during the safety times
c) supervision of the control box life, a "heart-attack" occurs after 250 000 cycles (A warning is given after 240 000 cycles by the information system; but an emergency operation facility exists).

1.13 LED information system code

The dual-coloured LED display contains 5 independent LED's and is mounted on the front of the control box. With this visual information display, 11 different programme stages and 10 different lockout causes can be shown.

programme stages

start
waiting for damper max. position
pre-purge
waiting for damper min. position
flame establishment
safety time
operation stage 1
operation stage 2
post-purge
return to start
pause

lockout-stages and warning

air proving switch
air proving switch at start
stray light
stray light at start
flame not established
flame extinguished
damper running time
safety time check
approaching end-of-life
heart attack

green green flashing red red flashing

1.14 Serial Interface

The serial interface works according the RS 422 standard with power level between 0V and 5V. The data transfer is 9600 baud, bidirectional, 8 data bit, 1 stop bit, none parity bit.

The levels of the transmit signals are as follows:
logical 1: transmit + ≈ 4.5V; transmit - ≈ 0.5V
logical 0: transmit + ≈ 0.5V; transmit - ≈ 4.5V

The receive signals require the following levels:
logical 1: difference betw. receive+ and receive- > 0.5V
logical 0: difference betw. receive - and receive+ > 0.5V

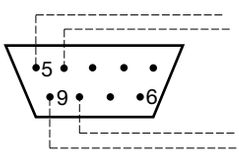

Overlay 9pol Dsub SGU:
4 Tx+ 5Tx-
8 Rx+ 9Rx-

1.15 Serial Interface

Generally speaking, any printer or computer with a serial interface type RS 422 can be connected to the SGU 930i, otherwise through a converter.

Possible configurations

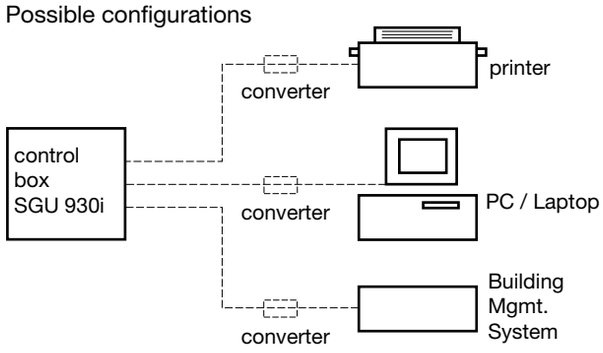

1.16 Configuration of the Info-system

Simple adjustments as well as requests for additional information can be done through a PC or laptop in conjunction with any terminal program. Below you will find the different commands which must be entered in capitol letters confirmed by the return key. By writing to the report the info-system then will acknowledge the reception accordingly to the command. This message acts as a proof that the command has been received.

SPRA1/SPRA2
The info-system is designed to handle two languages. The second language can be selected by the commands "SPRA1" for German and "SPRA2" for English.

LWBRE/LWBRA
The operation of burners with no air pressure switch requires the bridging of the terminals 9, 10 and 11. This must be communicated to the info-system with the command "LWBRA" to avoid confusion. The command "LWBRA" returns the info-system to operation with air pressure switch.

SGUIN
Print out of the additional information as well as of the lockout history.

PROTZ
With this command one always will receive the print out of a protocol line informing about the current status of the burner. The info-system only delivers a protocol line when it comes to an other program step. During the operation it therefore could be the case, that there won't be any print out for a long time. With the above mentioned command "PROTZ" a protocol line always can be requested.

PMOD1 / PMOD0
The "PMOD1" switches into the protocol mode 1. The Info system then delivers an extended protocol which includes all changes of the input signals. Usually the system works in the protocol mode 0. This mode only reports the single program steps. Not all proceedings are important for the program phases and therefore will not always being reported. With the mode 1 also these proceedings will be visible. The command "PMOD0" returns the system back to protocol mode 0.

INIAN
This command is used to check the self control function of the processor software and therefore whether the processor software itself works correctly. When the command "INIAN" is sent to the info system the following response must be reported:

```
SGU INFORMATIONSSYSTEM
VERSION 1.X.X
```

If this report does not appear, then the processor itself is defective.

2. Flame supervision

Flame supervision can be carried out by one of the following detectors:

- ionisation rod	where the mains supply provides a neutral earth connection
- U-V cell	type UVZ 780 for oil/gas- and dual fuel burners
- Infra-red flicker detector	type IRD 1020 for all type of burners

The different flame detectors are connected to separate terminals on the base, so that each detector is linked in the best possible way to the flame amplifier.
The flame signal display at the front of the control box is a 5-digit row of LED's . It displays continuously the value of the flame current and provides a constant indication of the flame signal strength. Any change in flame signal strength can be recognised immediately and corrective action can be taken without delay.

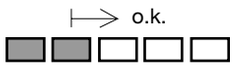

Flame signal display

2.1 Relation between flame signal indication and probe current

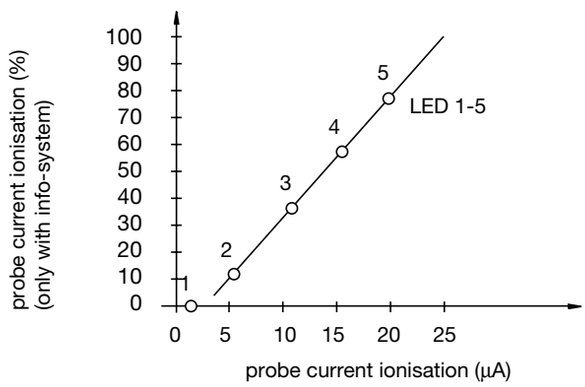

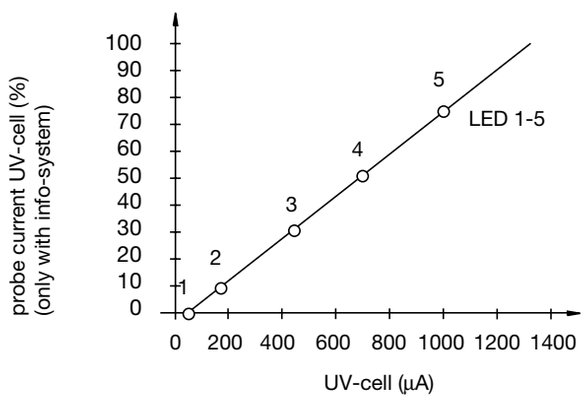

3. Control sequence for the burner

3.1 Selection of the programme
The various control programmes can be selected by external selector switches or by the appropriate wiring to the base:
- long pre-ignition time (terminal 18) or short pre-ignition time terminal 19
- lockout or recycling due to loss of flame, recycling is selected by a link between terminal 34 + 35
- ignition spark detection by U-V cell, no link between terminal 36 + 37
- fan motor with post-purge (terminal 17), or no post-purge terminal 16

3.2 Conditions to start
1. Control box at start position.
   Supply voltage connected to terminal 1 + N
2. Controlling thermostat calls for heat and safety interlocks are closed (between terminals 2 + 3)
3. Start command circuit SB, closed (terminals 7 + 8).
   These contacts may be open after approx. 6 secs.

3.3 Air damper control
With 3 separate output feeds, the air damper control can be set to either "closed", "low" air or "high" air positions. These monitored positions ensure "high" air for purging and "low" air before the initial release of fuel. Failure to reach both the "closed" and "high" air positions interrupt the control box sequence. If the air damper does not reach the required position within 100 seconds, the control box will go to lockout. Is no feed back from the air damper end position available, since no end contacts exist, then the terminals 28 and 2 must be connected together. Note, the air damper position is no longer controlled with this change. The output terminals of the air damper control are electrically isolated from the internal circuit of the control box after power is switched to the high flame or modulation stage thermostat. The modulation stage thermostat LR then controls the air damper, depending on the required firing rates of V1 (main flame) or V2 (high flame).

3.4 Air proving switch
The changeover contact of the air proving switch is connected to the safety circuit of the control box. Practically, a changeover contact for a switching current of 0.5 A will be used. If the contact is not in the "no air" position, the control sequence will not start. If this check is satisfied, the burner motor and air damper motor circuits are switched on. Combustion air supply must be proved within 9 seconds or the control box will go to lockout. Supervision of the combustion air supply ends with the interruption of the control thermostat circuit, the post-purge period is not monitored. To operate burner with no air proving switch, the terminals 9, 10 and 11 must be linked together.
Note, at SGU 930i this change must be told to the info-system (refer to 1.16 under LWBRE/LWBRA).

3.5 Valves
4 different valves can be connected, start valve or pilot valve, main valve (V1) and high flame or modulation stage valve (V2). On a single jet burner 3 firing rates can be achieved by use of the start valve and the main valves. Gas which flows through valves SV, V1 and V2 must join a common jet and the appropriate standards for the maximum firing rate of the start valve should be checked. Power is switched off to the pilot valve once the main flame is established. The maximum flow rate of the gas through the pilot valve is also limited by the relevant standard. It is not permitted to use the pilot valve and start valve at the same time.

3.6 Remote lockout facility

As a safety check, the control box can be put to lockout by closing the circuit between terminals 3 + 4. Reset from lockout can be achieved immediately by pressing the reset button at the front of the control box or by means of a remote switch.

4. Safety

The control boxes types SGU 930 and SGU 930i compliy with the latest European standards - EN 230 for oil burner control boxes and EN 298 for gas burner control boxes. The control boxes also offer the following safety features in addition to those set down in EN 230 and EN 298:

4.1 Stray light check

The stray light check begins approximately 8 seconds after the end of a programme cycle by applying a higher voltage to the U-V cell. During a shutdown, a flame signal of more than several seconds duration will lead to a lockout. Any flame signal due to stray light or breakdown of the U-V cell during the pre-purge period will result in an immediate lockout.

4.2 Safety circuit

In the safety circuit, the input signals (e.g. from the air proving switch or flame relay) are checked by cam switches. This check begins after the start of the programme cycle. If the input signal does not match the required one, the safety circuit will be interrupted and lockout will occur immediately. The safety circuit has the advantage that it can be easily extended to add an unlimited number of input signals, which can be checked and are fail-safe.

4.3 Additional safety features

All output voltages to the valves are supplied via the cam switches and the flame relay as normal and in addition, via two independent contacts on the safety and main relays. Together with the lockout switch, five switches control the voltage supply to each of the valves.
The control box will not start unless the mains supply is above 175 V. If the voltage drops to 150 V during the control sequence, power to the burner is shut off. When power returns to normal, the control box will relight the burner.
The micro-processor in the information system of the SGU 930i does not affect the control functions in any way. However, the micro-processor provides additional safety functions by supervising the safety times and the age of the control box.
The cam assembly, which controls the different timings of the control programme, is monitored during the safety times by the information system. Any irregularity results in a lockout.
The cam and switch assembly of the SGU 930i has a guaranteed lifetime of 250 000 cycles. If a control box reaches this number of cycles, the information system induces a "heart attack". The control box will then run to the end of the programme cycle and lockout. After resetting this lockout, an additional start is possible in an "emergency".

5. Mounting and Installation

5.1 Base

In the new base with its 44 terminals, all burner components, detectors, control devices and other connections can be made with up to 2 wires per terminal, and is therefore more practical and easier to check. Despite the high number of terminals, the construction of the base allows easy access to each terminal. The terminal screws are enclosed in a metal shoe, thus preventing any damage to the wiring. Apart from the 38 terminals for the control box, additional terminals are also available. They are as follows:

- 7 extra neutral terminals, internally linked in the base to the main neutral terminal
- 6 earth terminals, linked to the main earth tag
- 16 knock-out cable entry holes ø 7 mm in diameter
- 4 knock-out cable entry holes with a PG 11 thread

To assist trouble free operation the main neutral connection terminal in the wiring base must be fully tightened.
A keying arrangement on the base prevents the possibility of the incorrect control box being fitted onto the base.



5.2 General

Any mounting attitude is possible, but it is recommended to mount it in a way so that the LED displays and the coloured programme indicator can be easily seen. The control box itself is resistant to spray water (IP 44), but the flame detectors may be sensitive to water and moisture. If the U-V cell UVZ 780 is used, good contact with the burner earth by means of the mounting flange is essential. Control box and flame detectors should be protected from harsh vibration.
Where flame supervision is by ionisation electrode, safety regulations require that it should be properly insulated in order to prevent the risk of an electric shock. A voltage in excess of 25 V between neutral and earth will prevent troublefree operation. In this case, use of an isolating transformer is recommended.
As listed under technical data, the maximum cable length for the flame detector should not be exceeded for troublefree operation. It is not recommended to run the flame detector cables adjacent to power cables over long distances. Multi-cored cables should also not be used.
If during the test of the burner the click-rate (according to EN 55014) is higher than the max. allowed valve, a X2-capacitor of 0.1 µ F can be connected between terminal 1 and N.

WIRING DIAGRAM

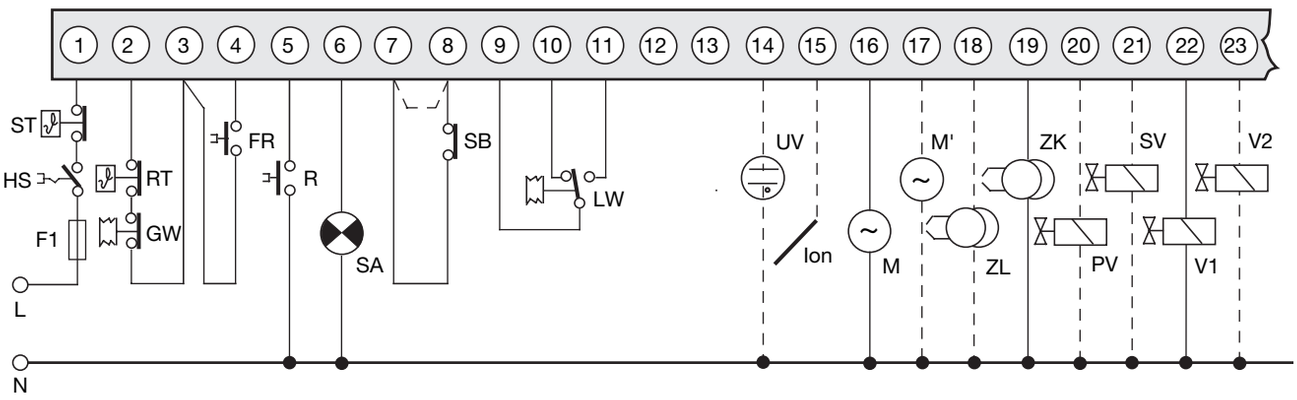

HS mains switch
LR high flame or modulation stage thermostat
RT control thermostat
ST limit thermostat
GW gas pressure switch
LW air pressure switch
SB start interlock
FR remote lockout
R reset
SA external lockout lamp
M burner motor without post-purge
M' burner motor with post-purge
LK air damper motor
Ion flame ionisation electrode
UV U-V cell
IRD I-R flicker detector
PV pilot valve
SV start valve
V1 main valve
V2 high flame or modulation stage valve
ZK ignition (short)
ZL ignition (long)
L,N mains voltage
F1 external fuse

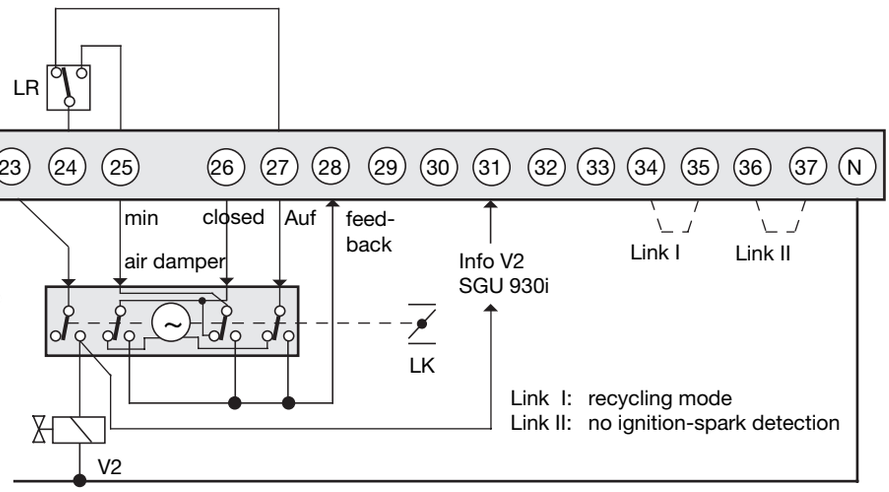

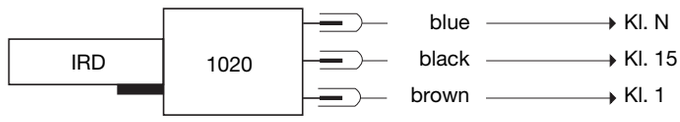

PROGRAMME CYCLE

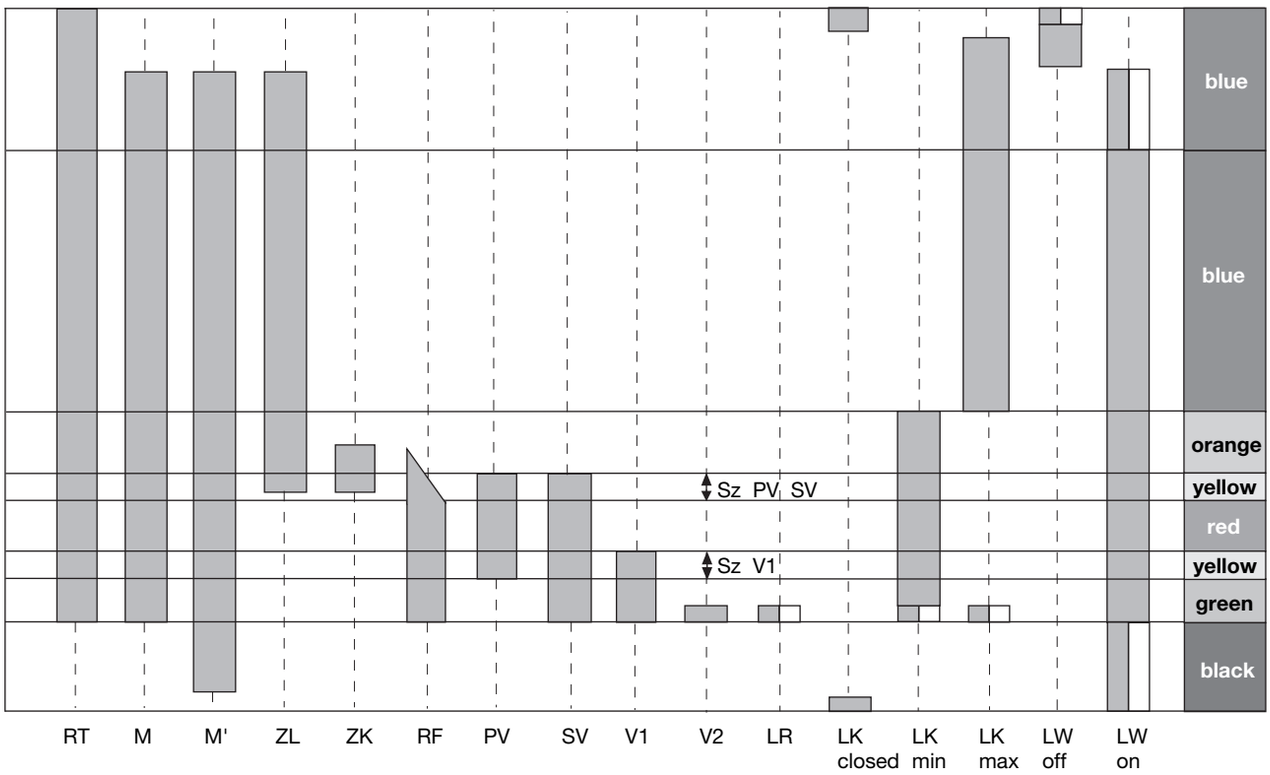

INSTALLATION INSTRUCTIONS AND MAINTENANCE

1. Important notes

- Ensure that the control box is correctly wired in accordance with the appropriate diagram. Faulty or incorrect wiring could cause damage to the control box or installation.
- When mounting and wiring to the control box, the appropriate installation standards must be observed.
- The external fuse rating should be as stated in the technical data. The built-in fuse must only be exchanged by one of the same rating, T6.3 A slow, according to DIN 41571. If this is ignored, damage and hazardous conditions as a result of a short circuit could occur.
- In compliance with the relevant standards, a shutdown must occur at least once every 24 hours.
- Power must be switched off whenever removing or fitting the control box.
- Control boxes are safety equipment and therefore sealed. They must not be opened and any interference with the internal workings of the control box may have hazardous consequences.

2. Function test

The safety test for the flame detector must be carried out when the control box is installed, and at every routine maintenance check and after any lengthy break in operation.

a) Shut off the fuel supply and link out the gas pressure switch and allow the burner to start:
   - at the expiry of the ignition safety time the control box must go to -> LOCKOUT

b) When the burner is in the "run" position cover the flame detector:
   - LOCKOUT must occur if the lockout mode is selected
   - or burner will shutdown and attempt to relight if the recycling mode is selected

3. Trouble shooting

With the help of the information system, time consuming and expensive trouble shooting is no longer necessary. The recording of the programme cycle and the fault diagnosis are new "tools", resulting in less difficult fault finding procedures and saving on maintenance cost. If an interpretation of the lockout and information memory is not needed at the site of the application, the investigation can be done afterwards. The non-volatile memory can be later connected to a printer, laptop or a PC to analyse it's contents while the burner is running with a replacement control box.
Another useful device to help follow the programme cycle and assist with trouble shooting is the built-in LED code display at the front of the control box. This shows all the various programme stages and lockouts or warnings. It is a continuous display and indicates at which stage the programme cycle has reached. Whe a lockout occurs, the reason for failure is shown on the display, it remains displayed until the control box is reset. Alongside the LED display, the most common codes are printed. Further decoding is listed in section 1.13 of this document. A detailed description of the complete information system can be found under the heading "APPLICATION FEATURES".
The coloured programme indicator of the cam assembly on control boxes without a built-in information system, at SGU 930, provides some help for trouble shooting. Faults during installation, operation or shutdown can be identified by this programme indicator. After lockout, it is recommended to make a note of the position of the indicator before re-setting.

The following list can be used for trouble shooting. Both cams of the SGU 930's cam assembly rotate synchronously and both programme indicators are identical.

Colour	Position	Fault	possible reason
BLUE	start	no start	no mains voltage, control or start circuit open
BLUE	after start	no start	air pressure switch not in "no air" position
BLUE	before red line	continuous	air damper not open (at "high" air position)
BLUE	red line	lockout	air pressure switch not in "air proved" position
BLUE	after red line	lockout	stray light, faulty flame detector
BLUE	after red line	burner stops	mains voltage <150 V
ORANGE	start	continuous	air damper not at "Low" air position
YELLOW	end	lockout	no flame established by start valve or pilot valve no flame signal or signal too weak ign. spark detection active without U-V cell no flame established after recycling
RED			
YELLOW	end	lockout	no flame signal after 2nd safety time or signal too weak (on 2-nozzle burners only)
GREEN	end	lockout	loss of flame in "run" position (in lockout mode) loss of combustion air supply
BLACK	end	lockout	stray light due to "after-burn" U-V cell failed the switch-off test due to aged or faulty U-V cell faulty flame detection circuit

BURNER 1- OR 2-STAGE

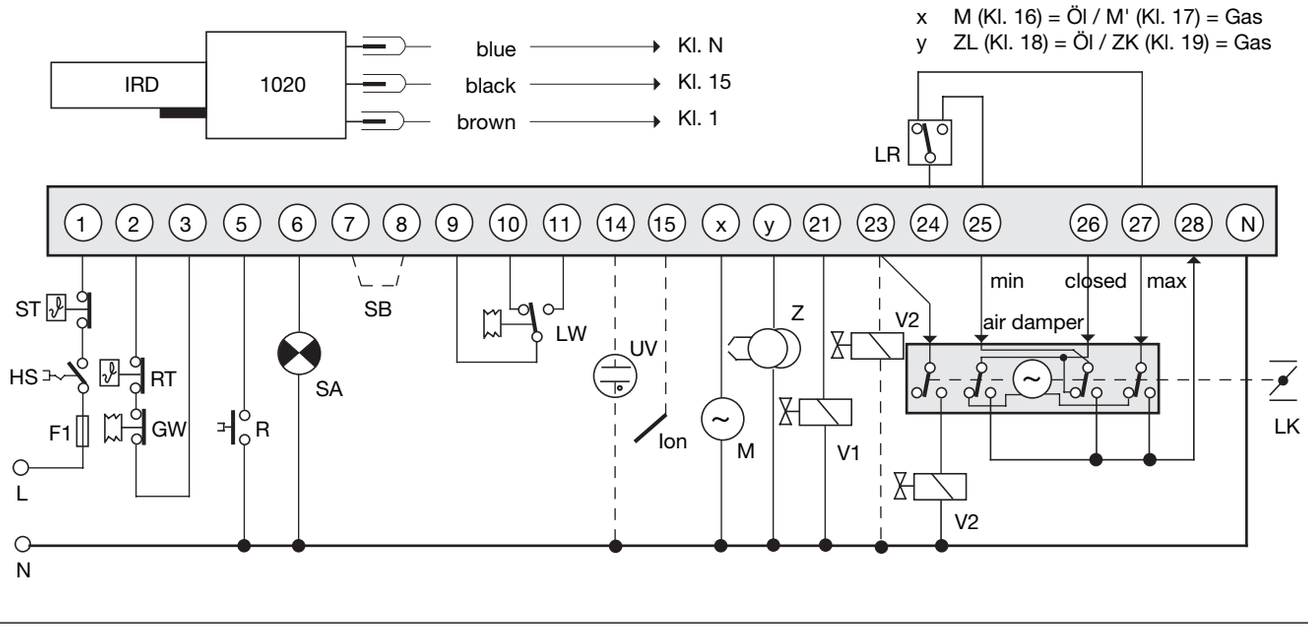

BURNER WITH START-VALVE

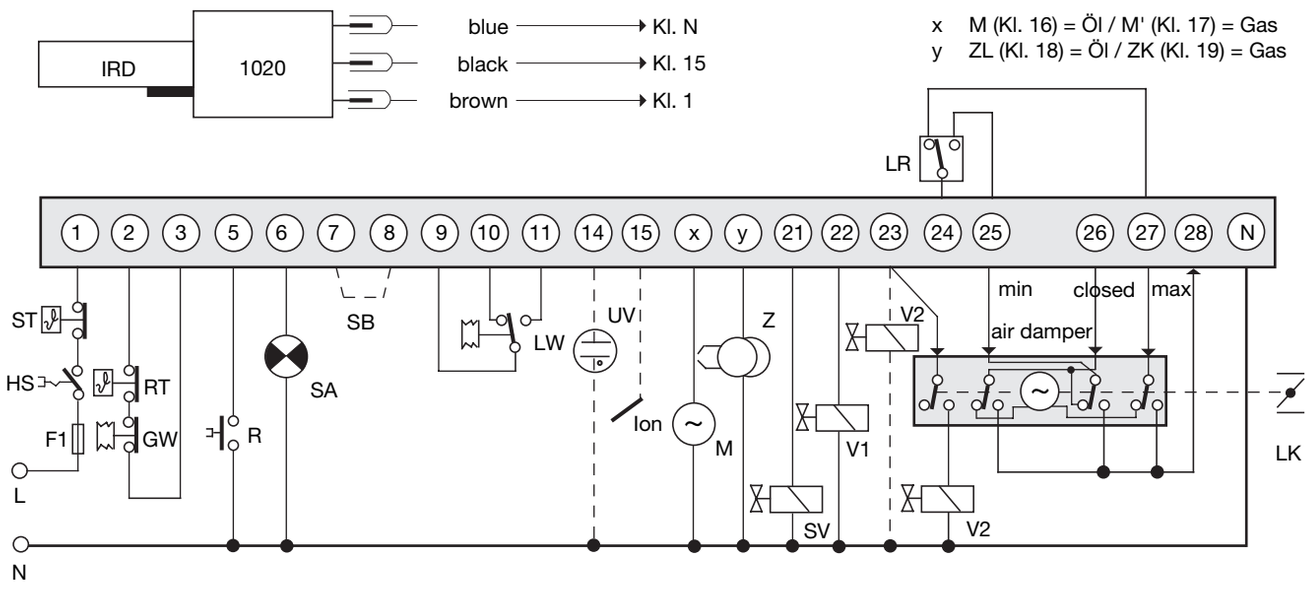

BURNER WITH 2 NOZZLES

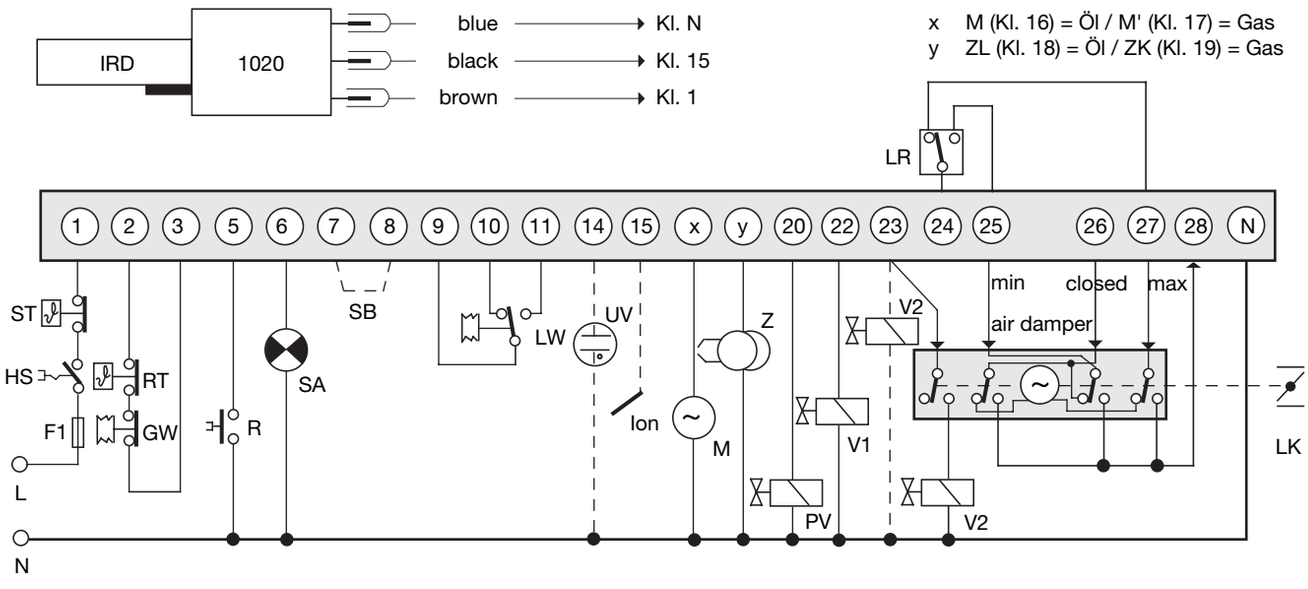

UVZ 780

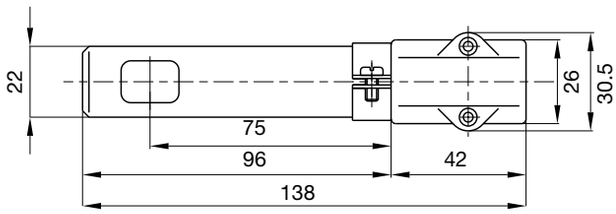

IRD 1020

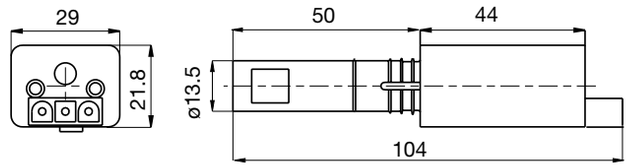

SGU 930 AND SGU 930i WITH BASE

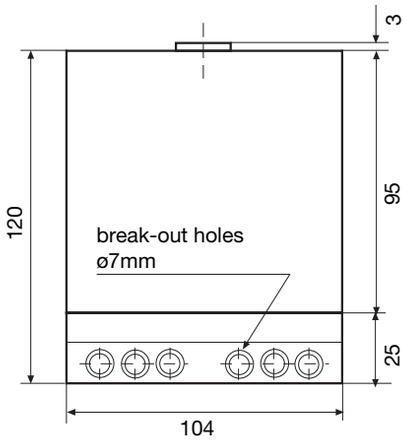

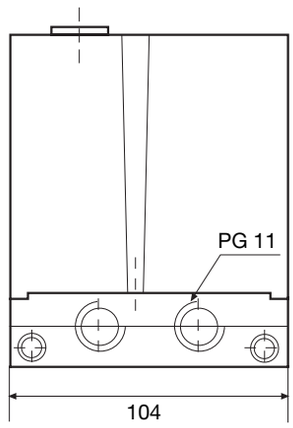

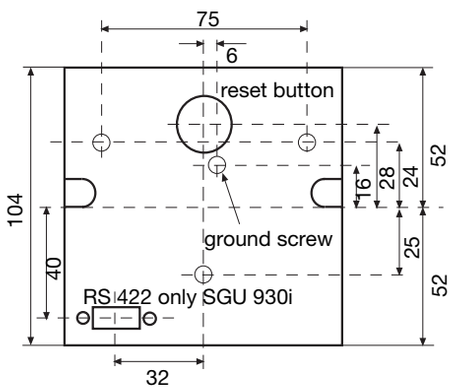

MOUNTING FLANGE IRD

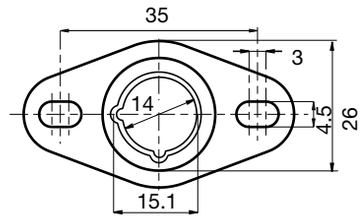

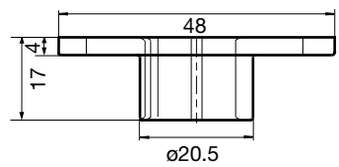

MOUNTING FLANGE UVZ

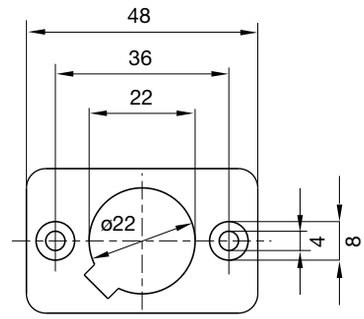

ORDERING INFORMATION

ITEM	DESIGNATION	ITEM NO.
Control box without info. system	SGU 930 Mod. 33-33	08910
Control box with info. system	SGU 930i Mod. 33-33	08911
Base	Base 930	70301
Flame detector	UVZ 780 blue	18812
Flame detector	UVZ 780 white	18814
Flame detector	UVZ 780 red	18813
Flame detector	IRD 1020 end-on viewing	16522
Flame detector	IRD 1020 side-on left	16523
Flame detector	IRD 1020 side-on right	16521
Mounting flange	UV Holder	18807
IRD mounting flange	IRD Holder M93	59093
Flame detector cable	3-wire, 0.5m	7236001

The above ordering information refers to the standard version.
Special versions are also included in our product range.

Specifications subject to change without notice.

Satronic AG
Brüelstrasse 7
Postfach 324
CH-8157 Dielsdorf

certified Qualitysystem
ISO 9001 / EN 29001
Reg. Nr. 10529

satronic
A Honeywell Company

DKG 972

Gas Burner Safety Control

For 2-stage atmospheric gas burners

Flame detection:
- **Ionisation probe**
- **Infrared-flicker detector IRD 1020**
- **UV flame sensor UVD 971**



INTRODUCTION

The burner control box DKG 972 controls and supervises atmospheric burners for gas. They are approved and certified according to the applicable European standards and regulations.
The microprocessor-based programming sequence ensures extremely stable timings independent of voltage variations, ambient temperature and/or switch-on cycles. The built-in information system not only provides a continuous monitoring of the actual state of the box (very helpful especially for monitoring the start-up phase) but also informs about the cause of a possible lock out. The lock out cause is stored in such a way that it can be retrieved even after a power failure.
The control box is designed for maximum safety in case of fluctuations in the voltage supply. If the mains voltage drops below the permitted level, operation is interrupted and the control box automatically prevents the start sequence from being repeated. In this way, the safety of the system is not put at risk by a drop in the mains voltage. This low-voltage protection works not only during start-up but also permanently during operation.

CONSTRUCTIONAL FEATURES

The control box circuitry is protected by a flame resistant, transparent plug-in type plastic housing. A central fixing screw locks the control box to the wiring base.
The plug-in control box incorporates the microprocessor based timer, flame check and reset circuits.
Manual reset from lock out and set to lock out is provided by a push button with an integrated LED information system.
A variety of cable entry points provides complete flexibility for electrical wiring.
The wiring base S98 is equipped with spare- and extraterminals and allows together with a variety of cable entry points utmost flexibility of electrical wiring.

The DKG 972 are compatible with the TFI 812. Different are only the pre- and post-ignition times.

Max. heating power according the limits in the Gas Appliance Directive.

TECHNICAL DATA

Operating voltage	220 / 240 V (-15... +10%) 50 Hz (±5%)
Fuse rating	10 A fast, 6 A slow
Power consumption	ca. 15 VA
Max. load per output	
- term. 3 ignition trafo	1.0 A, cos φ 0.2
- term. 5 + 6 solenoid valves	0.5 A, cos φ 0.4
- term. 7 alarm indicator	0.5 A, cos φ 0.4
total load	4.0 A, cos φ 0.4 max. 6 A during 0,5 sec
Reset time from lock out	none
Sensitivity	1 µA
min. ionisation current required	1.5 µA
Sensitivity for stray light	0.4 µA
Ionisation probe insulation greater than 50 MΩ	probe - earth
Stray capacitance less then 1000 pF	probe- earth
max. cable length	< 3 m
Flame detectors	
IRD 1020	side-on or end-on viewing
UVD 971	end-on viewing
Weight incl. Wiring base	190 g
Mounting position	any
Protection class	IP 40
Approved ambient parameter for control and flame detector	max. 95% at 30° C
- for operation	-20° C... +60° C
- for storage	-20° C... +80° C
Build-up of ice, penetration of water and condensing water are	inadmissible
Approvals according to European standards	EN 298 and EN 230, as well as all other relevant Directives and standards
Classified acc. to EN 298	FTLLXN

Timings (sec.)

Model	waiting time start **tw**	pre-ignition time **tvz**	Stray light monitoring **tf**	safety time **ts**	post-ignitiontime **tn**	delay 2nd-stage **tv2**
05	12	3	5	5	4.5	25
10	12	3	5	10	9.5	25
20	12	3	5	20	19.5	25

0651.10-00-e/01/99

APPLICATION FEATURES

1. Information system

The information system is microprocessor based and reports on all aspects of burner control box operation and flame supervision. It informs continuously about the actual programming sequence the unit is just performing. Besides monitoring of the programming sequence it also allows to identify errors during start-up of operation without any additional testing devices. The automatically performed diagnosis is a valuable tool which facilitates service/ maintenance work and therefore saves costs. The analyses of the error cause can be done directly on stage or if not possible afterwards as the lock out reason is stored in a non-volatile lock out mode memory.
The information system communicates with the outside world using a LED (the used Flash-Code is similar to the Morse-Code). The messages are optically transmitted by a appropriately flashing LED. Using an additional terminal (optional), the messages can be recorded and displayed in easy readable form.

1.1 Programming sequence display

The built-in microprocessor controls not only the programming sequence but the information system too. The individual phases of the programming sequence are displayed as Flash-Code.
The following messages can be distinguished:

Message	Flash-Code
waiting time tw	▮ ▮ ▮ .
pre-ignition tvz	▮ ▮ ▮ ▮ .
safety time ts post ignition tn	▮ ▮ ▮ .
delay time to valve V2 tv2	▮ ▮ ▮ ▮ .
running	▮ _
low mains voltage	▮ ▮ ▮ _

Description
x = short pulse
z = long pulse
. = short pause
_ = long pause

1.2 Lock-out diagnoses

In case of a failure the LED is permanently illuminated. Every 10 seconds the illumination is interrupted by a flash code, which indicates the cause of the error. Therefore the following sequence is performed which is repeated as long as the unit is not reset.

Sequence:

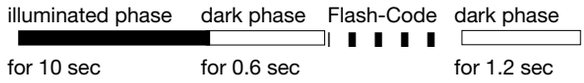

Error diagnosis

Error message	Flash-Code	Possible fault
lockout	▮ ▮ ▮ ▮ ▮	within lock out safety time no flame establishment
stray light	▮ ▮ ▮ ▮ ▮	stray light during monitored phase, detector may be faulty

Flash-Code for manual lock out

manual/external lock out (see also 3. lock out and reset)	▮ ▮ ▮ ▮ ▮ _ ▮ ▮ ▮ ▮ ▮ ▮

2. Flame detection

The following types of flame detectors are suitable:

- Ionisation probe, temperature resistant material, well insulated (material and insulation same as for ignition electrode).
- Infrared-flicker detector type IRD 1020 with mounting flange M 93 or the UV solid state flame sensor UVD 971.

Flame detection using an ionisation probe is only possible in conjunction with mains supplies which provides a neutral earth connection.
Connecting the IRD 1020 or UVD 971 the correct wiring has to be observed.

2.1 Stray light monitoring

The stray light check is performed at the end of the prepurge time for thr duration as mentioned in the technical datas.

3. Lock out and reset

The unit can be reset or brought into lock out mode in two different ways:

Internal
In the lock out case the unit can be reset by pushing the built-in button meaning a new start-up cycle is performed.

External
Instead of using the built-in lock out button the same function can be achieved by using an external button which connects terminal 9 with A (see also circuit and block diagram).

If the pushputton (internal or external) is pressed during normal operation or during the start sequence for more then 3 sec. and afterwards released, the control box will perform a shutdown.



Please note
The unit can only be brought to lockout mode or be reseted if power is applied to the unit.

4. Low-voltage protection

The mains voltage has to be more than 187 V_{eff} in order to allow the unit to perform a start-up.
The mains voltage is not only monitored in the start-up phase but also permanently during operation. If the voltage drops below < 160 V_{eff} during start-up or run time the control box goes into lock out mode. If the voltage rises again, the control box performs automatically a start-up as soon as the mains voltage is > 187 V_{eff}.

5. Safety

The design and control sequence of the DKG 972 controls will comply with the currently applicable standards and regulations (see also TECHNICAL DATA).

6. Mounting and electrical wiring

Wiring base:
- 3 earth terminals with additional terminal for burner earthing
- 3 neutral terminals with internal permanent connection to neutral terminal 8
- 2 independant spare terminals (S1 and S2)
- extra terminals A, B and C are standard
- 2 slide-in plates and 2 easy knock out holes (PG11 thread) plus 2 knock out holes in the base bottom faciliate the base wiring

The digital controls are ideally wiried on the new wiring bases S98, which are equipped with (terminals B and C are only for some special types of DMO or DMG) terminal A,. which is used for the remote reset / remote lockout functions.

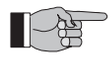

Please note
To assist trouble-free operation the main neutral connection terminal in the wiring base must be fully tightened. The terminal screws are already in the undone position. To connect a wire to the terminal, the screw only needs to be fastened.

General: The control box and detector probes should not be subjected to excessive vibration.

INSTALLATION INSTRUCTIONS AND MAINTENANCE

1. Important notes

- The controls must be installed by qualified personnel only. The relevant national regulations have to be observed.
- On commissioning the wiring has to be carefully checked according the appropriate diagram, Incorrect wiring can damage the unit and endanger the installation.
- The fuse rating has to ensure that the limits specified in TECHNICAL DATA will not be exceeded. If these precautions are not observed, the effect of a short circuit can cause severe damage to the control and installation.
- For safety reasons a minimum of one control shutdown every 24 hours has to be observed.
- Disconnect the mains before the control box is plugged in or out.
- The control box is a safety device and must not be opened!

2. Function control

For safety reasons the flame detection system should be tested on commissioning the installation as well as after a service or longer shut-down.

a) Attempt to start with gas valve closed:
   - At the end of the safety interval
     -> Lockout

b) After a normal start, with the burner in operation, close the gas valve:
   - At the end of the safety interval, system attempts to restart
     -> Lockout

3. Fault finding

The built-in information system facilitate the trouble shooting in the case of problems occurring during start-up or during operation.
A list of possible lock out messages can be found in APPLICATION FEATURES chapter 1.2.

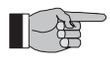

Please note:
The control box is locked in lock out mode and the reasen for the lock out is displayed until the control box is reset, either by an internal or external reset (see also subject “3. Lock out and reset").

Removing the control box from its wiring base or by interrupting the supply line may not reset a lock out. Therefore, by applying power, it needs 2-3 secs. before the control box goes to lock out again and the cause of the last lock out.

Error	Possible fault
Burner not working	- Thermostat circuit open - Faulty electrical wiring - mains voltage < 187 V
After 2-3 secs. after applying power. the unit goes to lock out	- Control box has not been reseted
Burner starts, flame not established, lock out	- No ignition or no fuel
Burner starts, flame established, after safety time, lock out	- no or too low flame signal (min. valves see TECHNICAL DATA) - wrongly wired, phase and neutral reversed - Ionisation probe dirty, broken or has contact to frame ground - too little light on flame senslor (IRD)

DKG 972

CIRCUIT AND TIMING DIAGRAM DKG 972

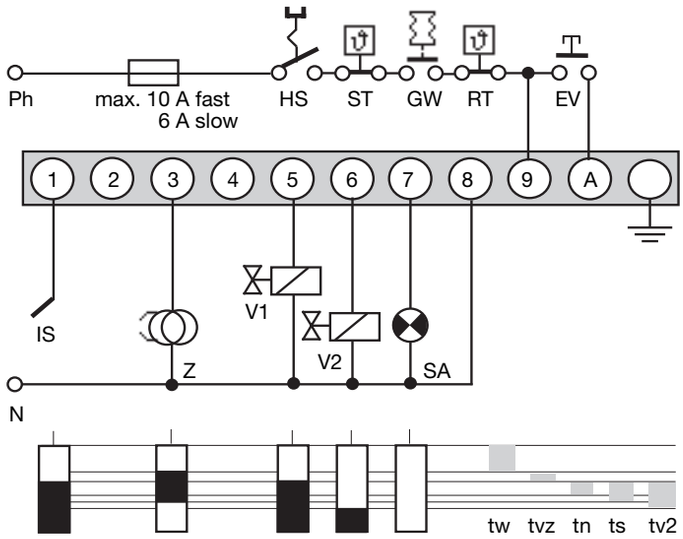

HS	Mains switch
GW	Gas proving switch
ST	Limit thermostat
RT	Control thermostat
EV	External reset and lock out button
IS	Ionisation probe (IRD 1020, UVD 971see separate diagram)
Z	Ignition
V1	Solenoid valve, 1st-stage
V2	Solenoid valve, 2nd-stage
SA	External lock out signal
tw	Waiting time
tvz	Pre-ignition time
tn	Post-ignition
ts	Safety time
tv2	2nd-stage delay

IRD- OR UVD CONNECTION

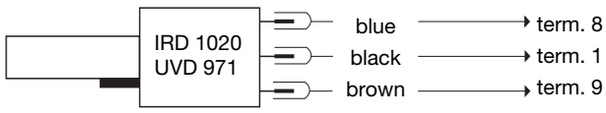

BLOCK DIAGRAM DKG 972

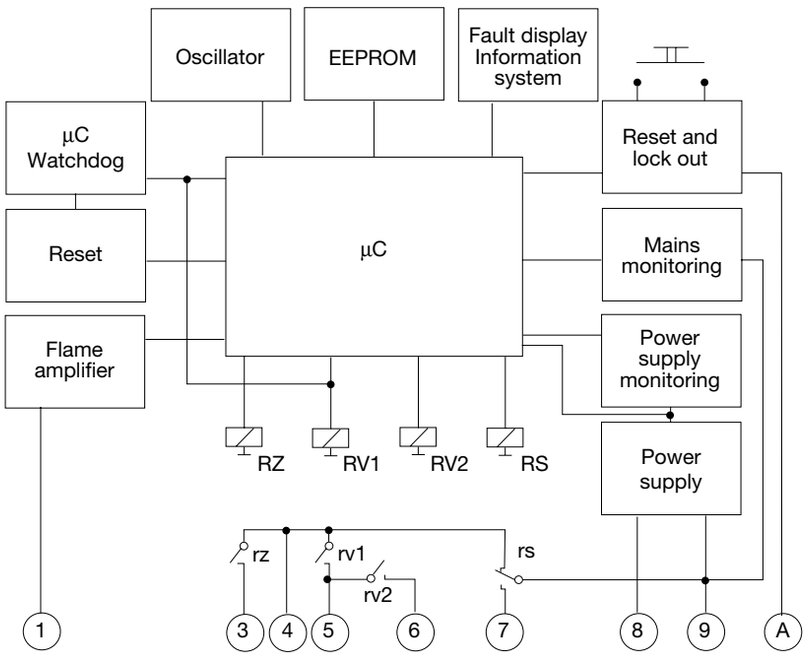

DKG 972 AND SOCKET

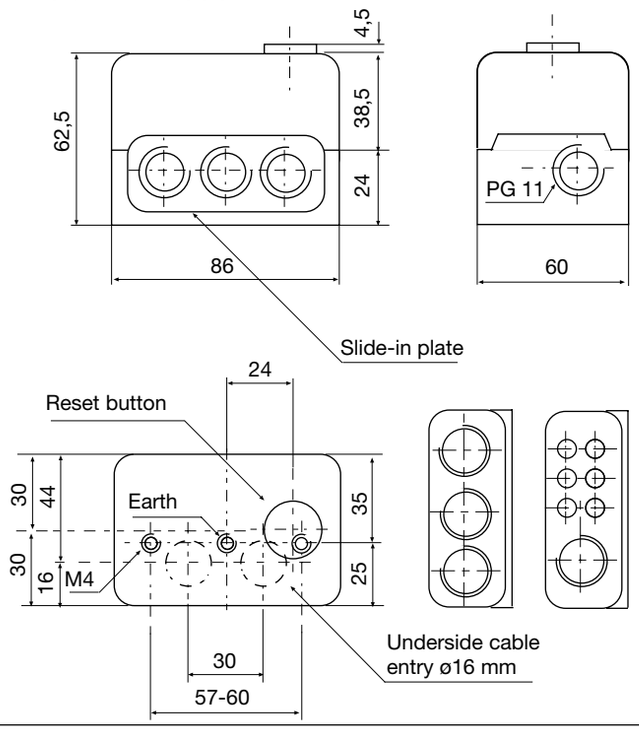

UVD 971

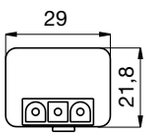

IRD 1020

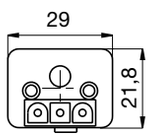

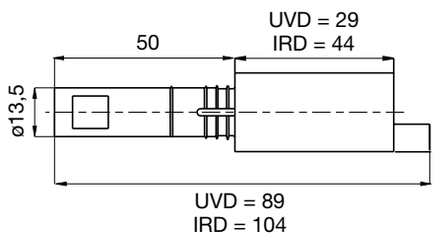

HOLDER M 93 FOR IRD

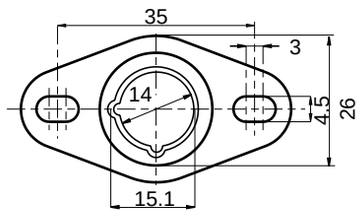

VARIATION IRD

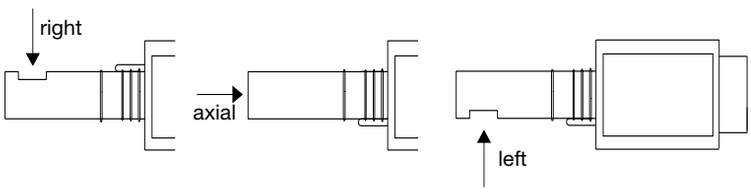

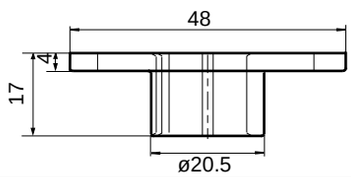

ORDERING INFORMATION

ITEM	DESIGNATION	ITEM NO.
Control box	DKG 972 Mod. 5	0332005
Control box	DKG 972 Mod. 10	0332010
Control box	DKG 972 Mod. 20	0332020
Socket	Wiring base S98	75310
Insert plate	PG-Plate	70502
optional	Cable entry plate	70501
Flame detector	IRD 1020 end-on	16522
Flame detector	IRD 1020 left	16523
Flame detector	IRD 1020 right	16521
optional	UVD 971	16722
Support for IRD	Holder M93 for IRD 1020	59093
Support for UVD	Holder M74 for UVD	59074
Connection cable	Plug type, 3 core cable, 0.6 m with tag wire ends	7236001

The above ordering information refers to the standard version.
Special versions are also included in our product range.

Specifications subject to change without notice

Satronic AG
Brüelstrasse 7
Postfach 324
CH-8157 Dielsdorf

Gas Burner Safety Control

For 2-stage forced draught and combi oil/gas burners

Possible flame detectors:
- **Ionisation probe**
- **Infrared flicker detector 1020**
- **UV flame sensor UVD 971**



INTRODUCTION

The burner control box DMG 970 controls and supervises power burner for gas and dual fuel. The control box is approved and certified according the relevant European standards. The use on direct air heaters according DIN 4794 is also possible.
The microprocessor- based programming sequence ensures extremely stable timings independent of voltage variations, ambient temperature and/or switch-on cycles. The built-in information system not only provides a continuous monitoring of the actual state of the box (very helpful especially for monitoring the start-up phase) but also informs about the cause of a possible lock out. The lock out cause is stored in such a way that it can be retrieved even after a power failure.
The control box is designed for maximum safety in case of fluctuations in the voltage supply. If the mains voltage drops below the permitted level, operation is interrupted and the control box automatically prevents the start sequence from being repeated. In this way, the safety of the system is not put at risk by a drop in the mains voltage. This low-voltage protection works not only during start-up but also permanently during operation.

CONSTRUCTIONAL FEATURES

Microprocessor, electronic components, output relais and flame amplifier are placed on two printed circuit boards. These plus the lockout- and reset circuit are well protected inside a flame resistant, plug-in type plastic housing.
The reset switch for reset / remote lockout with its built-in LED for displaying the information system plus the central fixing screw are placed on top of the housing.
The wiring base S98 is equipped with spare- and extraterminals and allows together with a variety of cable entry points utmost flexibility of electrical wiring.

The DMG 970 is funstionally compatible to MMI 810 and MMI 810.1

Please note: Is the DMG 970 to be used to replace the MMI 810 or 810.1, care has to be taken to make sure the air proving switch (LW) is wired between terminals 4 and 7 and not like on the MMI between 5 and 7.

TECHNICAL DATA

Operating voltage	220 / 240 V (-15... +10%) 50 Hz (±5%)
Fuse rating	10 A fast, 6 A slow
Power consumption	ca. 15 VA
Max. load per output	
- term. 3 ignition trafo	1.5 A, cos φ 0.2
- term. 4 motor	2.0 A, cos φ 0.4
- term. 5 + 6 solenoid valves	1.0 A, cos φ 0.4
- term. B alarm indicator	1.0 A, cos φ 0.4
total load	5.0 A, cos φ 0.4 max. 10 A during 0.5 sec
Air proving switch	1 working contact 4 A, 230V
Stray light monitoring	5 sec
Sensitivity (operation)	1 µA
Min. required ion. current	1.5 µA
Sensitivity for stray light	0.4µA
Ionisation probe insulation	Probe - earth greater than 50 MΩ
stray capacity	Probe - earth less than 1000 pF
cable lenght	< 3 m
Flame detectors	
IRD 1020	side-on or end-on viewing
UVD 971	end-on viewing
Weight incl. Wiring base	190 g
Mounting position	any
Protection class	IP 40
Approved ambient parameter	
for control and flame detector	max. 95% at 30° C
- for operation	-20° C... +60° C
- for storage	-20° C... +80° C
Build-up of ice, penetration of water and condensing water are inadmissible	
Approvals according to European standards	EN 298 and EN 230, as well as all other relevant Directives and standards
Classified acc. to EN 298	FTLLXN

Timings (sec.)

Model	waiting time start	max. reaction time for air proving switch **tlw**	supervised pre-purge time **tv1**	pre-ignition time **tvz**	ignition time total **tz**	Stray light monitoring **tf**	safety time **ts**	delay 2nd-stage **tv2**
01	0	60	24	3	5.5	5	3	12.5
02	0	60	24	3	7.5	5	5	14.5
03	0	60	40	3	5.5	5	3	12.5

0737.10-00-e/01/99

APPLICATION FEATURES

1. Information system

The information system is microprocessor based and reports on all aspects of burner control box operation and flame supervision. It informs continuously about the actual programming sequence the unit is just performing. Besides monitoring of the programming sequence it also allows to identify errors during start-up of operation without any additional testing devices. The automatically performed diagnosis is a valuable tool which facilitates service/ maintenance work and therefore saves costs. The analyses of the error cause can be done directly on stage or if not possible afterwards as the lock out reason is stored in a non-volatile lock out mode memory.
The information system communicates with the outside world using a LED (the used Flash-Code is similar to the Morse-Code). The messages are optically transmitted by a appropriately flashing LED. Using an additional terminal (optional), the messages can be recorded and displayed in easy readable form.

1.1 Programming sequence display

The built-in microprocessor controls not only the programming sequence but the information system too. The individual phases of the programming sequence are displayed as Flash-Code.
The following messages can be distinguished:

Message	Flash-Code
waiting for air proving switch	▮ ▮ .
pre-purge tv1	▮ ▮ ▮ .
pre-ignition tvz	▮ ▮ ▮ ▮ .
safety time ts	▮ ▮ .
delay 2nd stage tv2	▮ ▮ ▮ .
running	▮ _
low mains voltage	▮ ▮ ▮ _

Description
▮ = short pulse
▮ = long pulse
. = short pause
_ = long pause

1.2 Lock-out diagnoses

In case of a failure the LED is permanently illuminated. Every 10 seconds the illumination is interrupted by a flash code, which indicates the cause of the error. Therefore the following sequence is performed which is repeated as long as the unit is not reset.

Sequence:

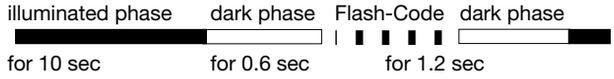

Error diagnosis

Error message	Flash-Code	Possible fault
lock out safety time	▮ ▮ ▮ ▮ ▮	within lock out safety time no flame establishment
stray light	▮ ▮ ▮ ▮ ▮	stray light during monitored phase, detector may be faulty
air proving switch in closed position	▮ ▮ ▮ ▮ ▮	air proving switch contact welded
air proving switch time-out	▮ ▮ ▮ ▮ ▮	air proving switch does not close within specified time
air proving switch opened	▮ ▮ ▮ ▮ ▮	air proving switch opens during start or operation
loss of flame	▮ ▮ ▮ ▮ ▮	loss of flame during operation

Flash-Code for manual lock out

anual/external lock out (see also 3. lock out and reset)	▮ ▮ ▮ ▮ ▮ _ ▮ ▮ ▮ ▮ ▮

2. Flame detection

The following types of flame detectors are suitable:
– Ionisation probe, temperature resistant material, well insulated (material and insulation same as for ignition electrode).
– Infrared-flicker detector type IRD 1020 with mounting flange M 93 or the UV solid state flame sensor UVD 971.

Flame detection using an ionisation probe is only possible in conjunction with mains supplies which provides a neutral earth connection.
Connecting the IRD 1020 or UVD 971 the correct wiring has to be observed.

2.1 Stray light monitoring

The stray light check is performed at the end of the pre-purge time for thr duration as mentioned in the technical datas.

DMG 970

3. Lock out and reset

The unit can be reset or brought into lock out mode in two different ways:

Internal
In the lock out case the unit can be reset by pushing the built-in button meaning a new start-up cycle is performed.

External
Instead of using the built-in lock out button the same function can be achieved by using an external button which connects terminal 9 with A (see also circuit and block diagram).

If the pushputton (internal or external) is pressed during normal operation or during the start sequence for more then 3 sec. and afterwards released, the control box will perform a shutdown.



Please note
The unit can only be brought to lockout mode or be reseted if power is applied to the unit.

4. Low-voltage protection

The mains voltage has to be more than 187 V_{eff} in order to allow the unit to perform a start-up.
The mains voltage is not only monitored in the start-up phase but also permanently during operation. If the voltage drops below < 160 V_{eff} during start-up or run time the control box goes into lock out mode. If the voltage rises again, the control box performs automatically a start-up as soon as the mains voltage is > 187 V_{eff}.

5. Safety

The design and control sequence of the DMG 970 controls will comply with the currently applicable standards and regulations (see also TECHNICAL DATA).

6. Mounting and electrical wiring

Wiring base:
- 3 earth terminals with additional terminal for burner earthing
- 3 neutral terminals with internal permanent connection to neutral terminal 8
- 2 independant spare terminals (S1 and S2)
- extra terminals A, B and C are standard
- 2 slide-in plates and 2 easy knock out holes (PG11 thread) plus 2 knock out holes in the base bottom faciliate the base wiring

The digital controls are ideally wiried on the new wiring bases S98, which are equipped with (terminals B and C are only for some special types of DMO or DMG) terminal A,. which is used for the remote reset / remote lockout functions.

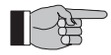

Please note
To assist trouble-free operation the main neutral connection terminal in the wiring base must be fully tightened. The terminal screws are already in the undone position. To connect a wire to the terminal, the screw only needs to be fastened.

General: The control box and detector probes should not be subjected to excessive vibration.





INSTALLATION INSTRUCTIONS AND MAINTENANCE

1. Important notes

- The controls must be installed by qualified personnel only. The relevant national regulations have to be observed.
- On commissioning the wiring has to be carefully checked according the appropriate diagram, Incorrect wiring can damage the unit and endanger the installation.
- The fuse rating has to ensure that the limits specified in TECHNICAL DATA will not be exceeded. If these precautions are not observed, the effect of a short circuit can cause severe damage to the control and installation.
- For safety reasons a minimum of one control shutdown per 24 hours has to be observed.
- Disconnect the mains before the control box is plugged in or out.
- The control box is a safety device and must not be opened!

2. Function control

For safety reasons the flame detection system should be tested on commissioning the installation as well as after a service or longer shut-down.

a) Start-up with closed gas valve
   - After lock out safety time is over the unit has to go into lock out mode!

b) Normal start-up, when burner is running, close gas valve
   - After loss of flame, the control box has to go into lockout mode

c) Normal start-up, during pre-purge or operation, interrupt the air proving switch
   - The control box has to perform a lockout immediatly

d) Bridged air proving switch before start
   - the fan motor switches on for approx. 2 - 3 secs, followed by a lockout. After 10 secs., this quick lockout is resetted by the control box and a second start attempt follows (fan motor switches on for approx. 2 - 3 secs.). A standard lockout appears if the air proving switch (LW) contact is still in it's closed position (e.g. welded contacts). Has the air proving switch (LW) changed to it's open position in the meantime (e.g. by a run down motor), a normal start sequence follows.

3. Fault finding

The built-in information system facilitates the trouble shooting in the case of problems occurring during start-up or during operation.
A list of possible lock out messages can be found in APPLICATION FEATURES chapter 1.2.



Please note:
The control box is locked in lock out mode and the reasen for the lock out is displayed until the control box is reset, either by an internal or external reset (see also subject "3. Lock out and reset").

Removing the control box from its wiring base or by interrupting the supply line may not reset a lock out. Therefore, by applying power, the fan motor switches on for 2-3 secs. before the control box goes to lock out again and the cause of the last lock out.

Error	Possible fault
Burner not working	- Thermostat circuit open - Faulty electrical wiring - mains voltage < 187 V
Fan motor/nozzle preheater starts for a short period of time, control box goes to lock out	- Control box has not been reset - Air proving switch not in open position
Control box locks out pre-purge	- Air proving switch has not during closed within 60 secs. - Air proving switch has re-opened
Control box locks out at the end of pre-purge	- Air proving switch open - Flame signal
Burner starts, flame not established, lock out	- Stray light on flame detector (IRD only) - No ignition or no fuel
Burner starts, flame established, after safety time, lock out	- No or too low flame signal (flame does not stick, bad insulation of the ionisation probe, bad connection to frame ground) - Insufficient light on IRD - Sensitivity adjustment too low on IRD

DMG 970

CIRCUIT AND TIMING DIAGRAM DMG 970

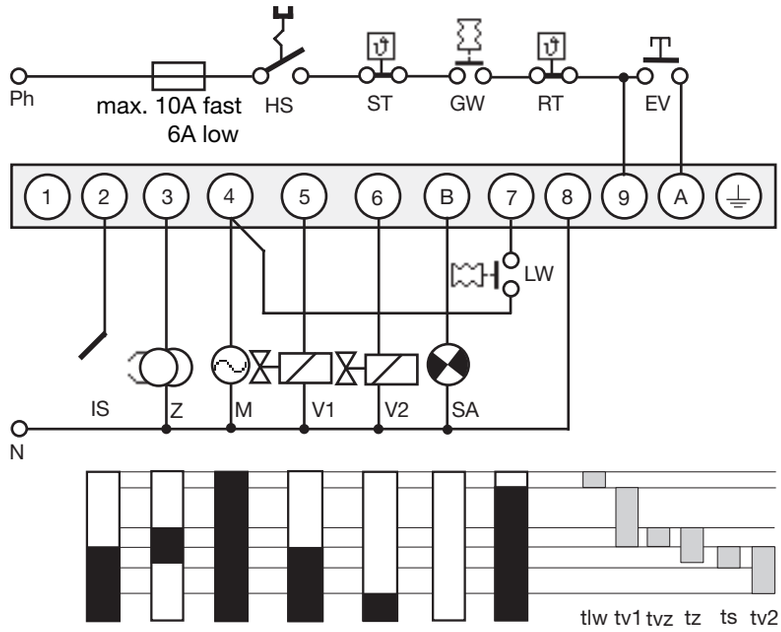

HS	Mains switch
GW	Gas proving switch
ST	Limit thermostat
RT	Control thermostat
EV	External reset and lock out button
IS	Ionisation probe (IRD 1010, UVD 971 see separate diagram)
Z	Ignition
M	Burner motor
V1	Solenoid valve, 1st-stage
V2	Solenoid valve, 2nd-stage
LW	Air proving switch
SA	External lock out signal
tlw	max. reaction time for air proving switch
tv1	Supervised pre-purge time
tvz	Pre-ignition time
tz	Ignition time total
ts	Safety time
tv2	Delay 2nd-stage

IRD- OR UVD CONNECTION

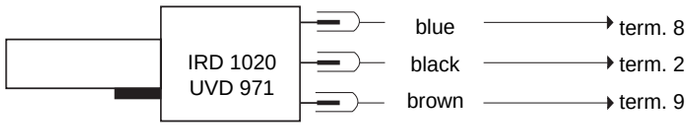

BLOCK DIAGRAM DMG 970

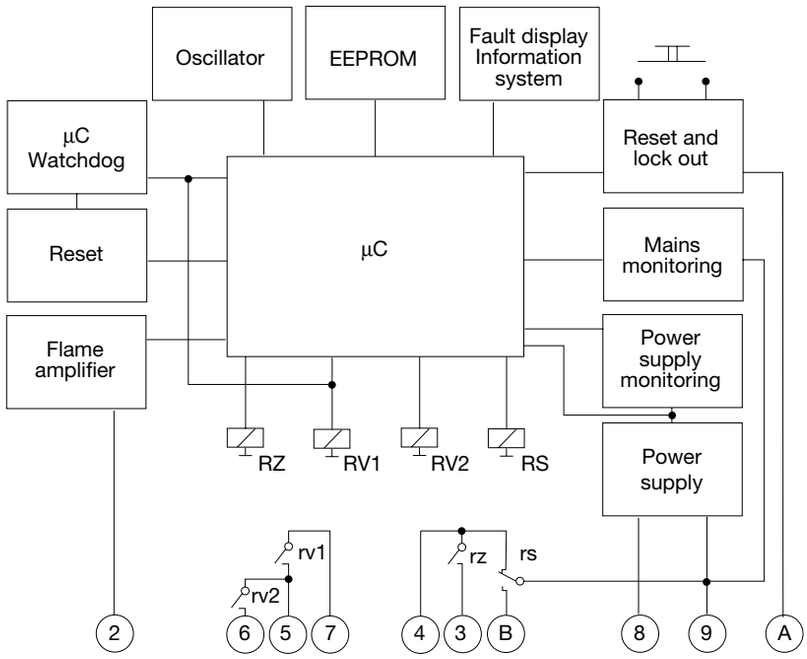

DMG 970 AND SOCKET

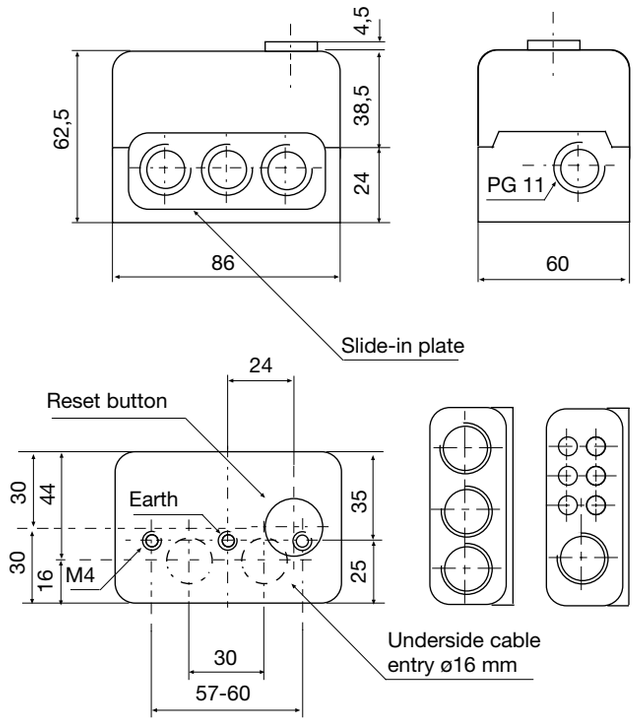

UVD 971

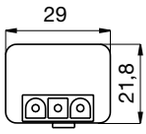

IRD 1020

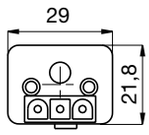

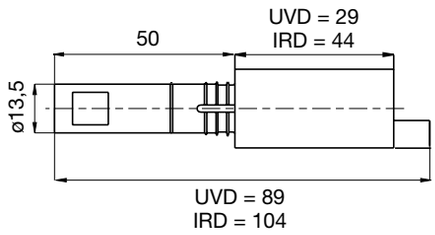

HOLDER M 93 FOR IRD

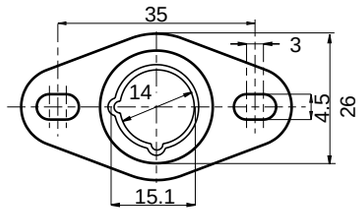

VARIATION IRD

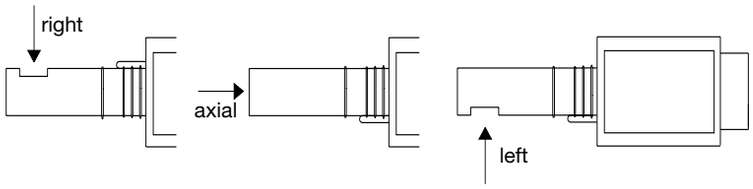

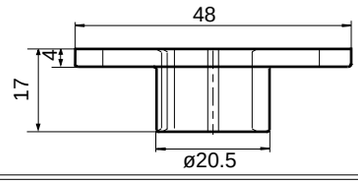

ORDERING INFORMATION

ITEM	DESIGNATION	ITEM NO.
Control box	DMG 970 Mod. 01	0350001
Control box	DMG 970 Mod. 02	0350002
Control box	DMG 970 Mod. 03	0350003
Socket	Wiring base S98	75310
Insert plate	PG-Plate	70502
optional	Cable entry plate	70501
Flame detector	IRD 1020 end-on	16522
Flame detector	IRD 1020 left	16523
Flame detector	IRD 1020 right	16521
optional	UVD 971	16722
Support for IRD	Holder M93 for IRD 1020	59093
Support for UVD	Holder M74 for UVD	59074
Connection cable	Plug type, 3 core cable, 0.6 m with tag wire ends	7236001

The above ordering information refers to the standard version.
Special versions are also included in our product range.

Specifications subject to change without notice

Satronic AG
Brüelstrasse 7
Postfach 324
CH-8157 Dielsdorf

certified Qualitysystem
SQS
ISO 9001 / EN 29001
Reg. Nr. 10529

satronic
A Honeywell Company

DMG 971

Gas Burner Safety Control

For 2-stage forced draught and combi oil/gas burners

Possible flame detectors:
- **Ionisation probe**
- **Infrared flicker detector 1020**
- **UV flame sensor UVD 971**



INTRODUCTION

The burner control box DMG 971 controls and supervises power burner for gas and dual fuel. The control box is approved and certified according the relevant European standards. The use on direct air heaters according DIN 4794 is also possible.
The microprocessor- based programming sequence ensures extremely stable timings independent of voltage variations, ambient temperature and/or switch-on cycles. The built-in information system not only provides a continuous monitoring of the actual state of the box (very helpful especially for monitoring the start-up phase) but also informs about the cause of a possible lock out. The lock out cause is stored in such a way that it can be retrieved even after a power failure.
The control box is designed for maximum safety in case of fluctuations in the voltage supply. If the mains voltage drops below the permitted level, operation is interrupted and the control box automatically prevents the start sequence from being repeated. In this way, the safety of the system is not put at risk by a drop in the mains voltage. This low-voltage protection works not only during start-up but also permanently during operation.

CONSTRUCTIONAL FEATURES

Microprocessor, electronic components, output relais and flame amplifier are placed on two printed circuit boards. These plus the lockout- and reset circuit are well protected inside a flame resistant, plug-in type plastic housing.
The reset switch for reset / remote lockout with its built-in LED for displaying the information system plus the central fixing screw are placed on top of the housing.
The wiring base S98 is equipped with spare- and extraterminals and allows together with a variety of cable entry points utmost flexibility of electrical wiring.

The DMG 971 is funstionally compatible to MMI 811 and MMI 811.1

Please note: Is the DMG 971 to be used to replace the MMI 811 or 811.1, care has to be taken to make sure the air proving switch (LW) is wired between terminals 4 and 7 and not like on the MMI between 5 and 7.

TECHNICAL DATA

Operating voltage	220 / 240 V (-15... +10%) 50 Hz (±5%)
Fuse rating	10 A fast, 6 A slow
Power consumption	ca. 15 VA
Max. load per output	
- term. 3 ignition trafo	1.5 A, cos φ 0.2
- term. 4 motor	2.0 A, cos φ 0.4
- term. 5 + 6 solenoid valves	1.0 A, cos φ 0.4
- term. B alarm indicator	1.0 A, cos φ 0.4
total load	5.0 A, cos φ 0.4 max. 10 A during 0.5 sec
Air proving switch	1 working contact 4 A, 230V
Stray light monitoring	5 sec
Sensitivity (operation)	1 µA
Min. required ion. current	1.5 µA
Sensitivity for stray light	0.4µA
Ionisation probe insulation	Probe - earth greater than 50 MΩ
stray capacity	Probe - earth less than 1000 pF
cable lenght	< 3 m
Flame detectors	
IRD 1020	side-on or end-on viewing
UVD 971	end-on viewing
Weight incl. Wiring base	190 g
Mounting position	any
Protection class	IP 40
Approved ambient parameter	
for control and flame detector	max. 95% at 30° C
- for operation	-20° C... +60° C
- for storage	-20° C... +80° C
Build-up of ice, penetration of water and condensing water are inadmissible	
Approvals according to European standards	EN 298 and EN 230, as well as all other relevant Directives and standards
Classified acc. to EN 298	FTLLXN

Timings (sec.)

Model	waiting time start	max. reaction time for air proving switch **tlw**	supervised pre-purge time **tv1**	pre-ignition time **tvz**	ignition time total **tz**	Stray light monitoring **tf**	safety time **ts**	delay 2nd-stage **tv2**
01	0	60	24	3	5	5	3	12.5

0737.11-00-e/01/99

APPLICATION FEATURES

1. Information system

The information system is microprocessor based and reports on all aspects of burner control box operation and flame supervision. It informs continuously about the actual programming sequence the unit is just performing. Besides monitoring of the programming sequence it also allows to identify errors during start-up of operation without any additional testing devices. The automatically performed diagnosis is a valuable tool which facilitates service/ maintenance work and therefore saves costs. The analyses of the error cause can be done directly on stage or if not possible afterwards as the lock out reason is stored in a non-volatile lock out mode memory.
The information system communicates with the outside world using a LED (the used Flash-Code is similar to the Morse-Code). The messages are optically transmitted by a appropriately flashing LED. Using an additional terminal (optional), the messages can be recorded and displayed in easy readable form.

1.1 Programming sequence display

The built-in microprocessor controls not only the programming sequence but the information system too. The individual phases of the programming sequence are displayed as Flash-Code.
The following messages can be distinguished:

Message	Flash-Code
waiting for air proving switch	▮ ▮ .
pre-purge tv1	▮ ▮ ▮ .
pre-ignition tvz	▮ ▮ ▮ ▮ .
safety time ts	▮ ▮ .
delay 2nd stage tv2	▮ ▮ ▮ .
running	▮ _
low mains voltage	▮ ▮ ▮ _

Description
▮ = short pulse
▮ = long pulse
. = short pause
_ = long pause

1.2 Lock-out diagnoses

In case of a failure the LED is permanently illuminated. Every 10 seconds the illumination is interrupted by a flash code, which indicates the cause of the error. Therefore the following sequence is performed which is repeated as long as the unit is not reset.

Sequence:

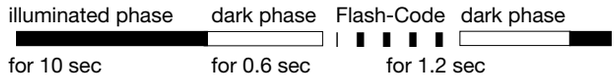

Error diagnosis

Error message	Flash-Code	Possible fault
lock out safety time	▮ ▮ ▮ ▮ ▮	within lock out safety time no flame establishment
stray light	▮ ▮ ▮ ▮ ▮	stray light during monitored phase, detector may be faulty
air proving switch in closed position	▮ ▮ ▮ ▮ ▮	air proving switch contact welded
air proving switch time-out	▮ ▮ ▮ ▮ ▮	air proving switch does not close within specified time
air proving switch opened	▮ ▮ ▮ ▮ ▮	air proving switch opens during start or operation
loss of flame	▮ ▮ ▮ ▮ ▮	loss of flame during operation

Flash-Code for manual lock out

anual/external lock out (see also 3. lock out and reset)	▮ ▮ ▮ ▮ ▮ _ ▮ ▮ ▮ ▮ ▮

2. Flame detection

The following types of flame detectors are suitable:
– Ionisation probe, temperature resistant material, well insulated (material and insulation same as for ignition electrode).
– Infrared-flicker detector type IRD 1020 with mounting flange M 93 or the UV solid state flame sensor UVD 971.

Flame detection using an ionisation probe is only possible in conjunction with mains supplies which provides a neutral earth connection.
Connecting the IRD 1020 or UVD 971 the correct wiring has to be observed.

2.1 Stray light monitoring

The stray light check is performed at the end of the pre-purge time for thr duration as mentioned in the technical datas.

DMG 971

3. Lock out and reset

The unit can be reset or brought into lock out mode in two different ways:

Internal
In the lock out case the unit can be reset by pushing the built-in button meaning a new start-up cycle is performed.

External
Instead of using the built-in lock out button the same function can be achieved by using an external button which connects terminal 1 with A (see also circuit and block diagram).

If the pushputton (internal or external) is pressed during normal operation or during the start sequence for more then 3 sec. and afterwards released, the control box will perform a shutdown.



Please note
The unit can only be brought to lockout mode or be reseted if power is applied to the unit.

4. Low-voltage protection

The mains voltage has to be more than 187 V_{eff} in order to allow the unit to perform a start-up.
The mains voltage is not only monitored in the start-up phase but also permanently during operation. If the voltage drops below < 160 V_{eff} during start-up or run time the control box goes into lock out mode. If the voltage rises again, the control box performs automatically a start-up as soon as the mains voltage is > 187 V_{eff}.

5. Safety

The design and control sequence of the DMG 971 controls will comply with the currently applicable standards and regulations (see also TECHNICAL DATA).

6. Mounting and electrical wiring

Wiring base:
- 3 earth terminals with additional terminal for burner earthing
- 3 neutral terminals with internal permanent connection to neutral terminal 8
- 2 independant spare terminals (S1 and S2)
- extra terminals A, B and C are standard
- 2 slide-in plates and 2 easy knock out holes (PG11 thread) plus 2 knock out holes in the base bottom faciliate the base wiring

The digital controls are ideally wiried on the new wiring bases S98, which are equipped with (terminals B and C are only for some special types of DMO or DMG) terminal A,. which is used for the remote reset / remote lockout functions.

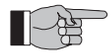

Please note
To assist trouble-free operation the main neutral connection terminal in the wiring base must be fully tightened. The terminal screws are already in the undone position. To connect a wire to the terminal, the screw only needs to be fastened.

General: The control box and detector probes should not be subjected to excessive vibration.




INSTALLATION INSTRUCTIONS AND MAINTENANCE

1. Important notes

- The controls must be installed by qualified personnel only. The relevant national regulations have to be observed.
- On commissioning the wiring has to be carefully checked according the appropriate diagram, Incorrect wiring can damage the unit and endanger the installation.
- The fuse rating has to ensure that the limits specified in TECHNICAL DATA will not be exceeded. If these precautions are not observed, the effect of a short circuit can cause severe damage to the control and installation.
- For safety reasons a minimum of one control shutdown per 24 hours has to be observed.
- Disconnect the mains before the control box is plugged in or out.
- The control box is a safety device and must not be opened!

2. Function control

For safety reasons the flame detection system should be tested on commissioning the installation as well as after a service or longer shut-down.

a) Start-up with closed gas valve
   - After lock out safety time is over the unit has to go into lock out mode!

b) Normal start-up, when burner is running, close gas valve
   - After loss of flame, the control box has to go into lockout mode

c) Normal start-up, during pre-purge or operation, interrupt the air proving switch
   - The control box has to perform a lockout immediatly

d) Bridged air proving switch before start
   - the fan motor switches on for approx. 2 - 3 secs, followed by a lockout. After 10 secs., this quick lockout is resetted by the control box and a second start attempt follows (fan motor switches on for approx. 2 - 3 secs.). A standard lockout appears if the air proving switch (LW) contact is still in it's closed position (e.g. welded contacts). Has the air proving switch (LW) changed to it's open position in the meantime (e.g. by a run down motor), a normal start sequence follows.

3. Fault finding

The built-in information system facilitates the trouble shooting in the case of problems occurring during start-up or during operation.
A list of possible lock out messages can be found in APPLICATION FEATURES chapter 1.2.

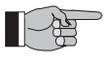

Please note:
The control box is locked in lock out mode and the reasen for the lock out is displayed until the control box is reset, either by an internal or external reset (see also subject "3. Lock out and reset").

Removing the control box from its wiring base or by interrupting the supply line may not reset a lock out. Therefore, by applying power, the fan motor switches on for 2-3 secs. before the control box goes to lock out again and the cause of the last lock out.

Error	Possible fault
Burner not working	- Thermostat circuit open - Faulty electrical wiring - mains voltage < 187 V
Fan motor/nozzle preheater starts for a short period of time, control box goes to lock out	- Control box has not been reset - Air proving switch not in open position
Control box locks out pre-purge	- Air proving switch has not during closed within 60 secs. - Air proving switch has re-opened
Control box locks out at the end of pre-purge	- Air proving switch open - Flame signal
Burner starts, flame not established, lock out	- Stray light on flame detector (IRD only) - No ignition or no fuel
Burner starts, flame established, after safety time, lock out	- No or too low flame signal (flame does not stick, bad insulation of the ionisation probe, bad connection to frame ground) - Insufficient light on IRD - Sensitivity adjustment too low on IRD

DMG 971

CIRCUIT AND TIMING DIAGRAM DMG 971

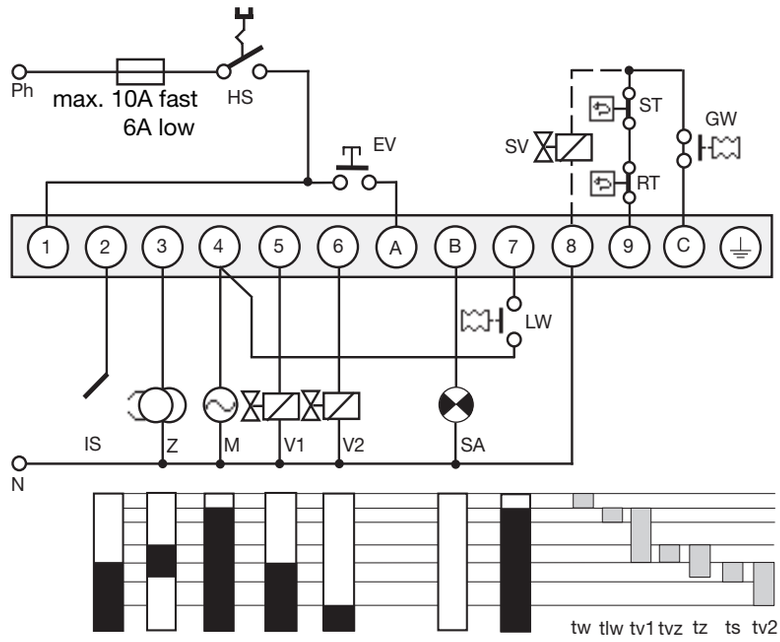

HS	Mains switch
GW	Gas proving switch
ST	Limit thermostat
RT	Control thermostat
EV	External reset and lock out button
IS	Ionisation probe (IRD 1010, UVD 971 see separate diagram)
Z	Ignition
M	Burner motor
V1	Solenoid valve, 1st-stage
V2	Solenoid valve, 2nd-stage
LW	Air proving switch
SA	External lock out signal
tlw	max. reaction time for air proving switch
tv1	Supervised pre-purge time
tvz	Pre-ignition time
tz	Ignition time total
ts	Safety time
tv2	Delay 2nd-stage

IRD- OR UVD CONNECTION

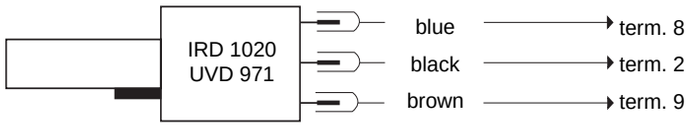

BLOCK DIAGRAM DMG 971

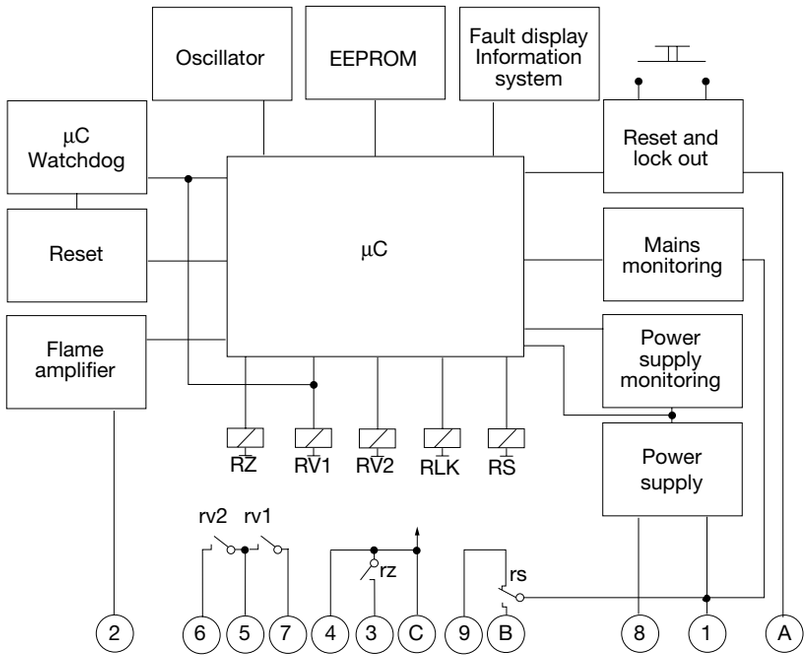

DMG 971 AND SOCKET

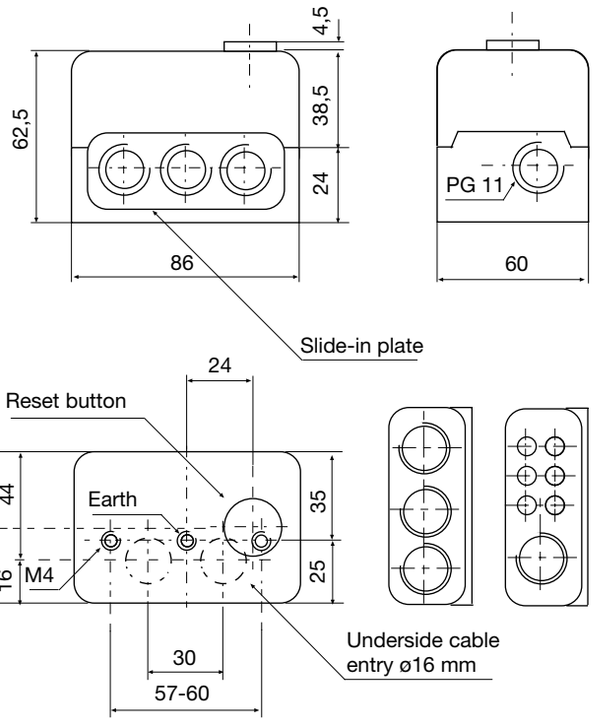

UVD 971

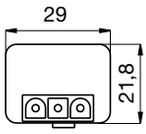

IRD 1020

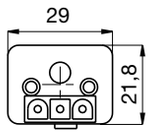

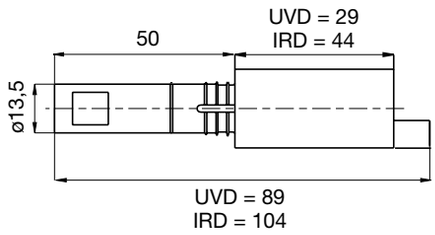

HOLDER M 93 FOR IRD

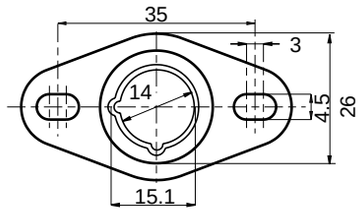

VARIATION IRD

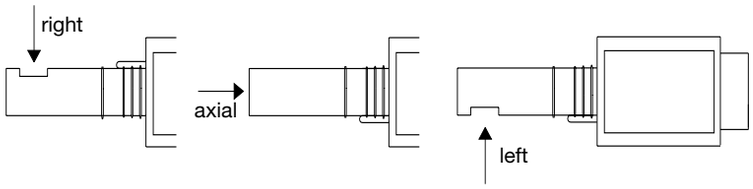

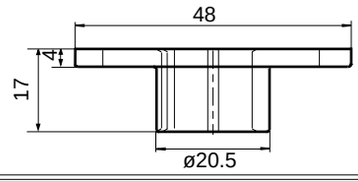

ORDERING INFORMATION

ITEM	DESIGNATION	ITEM NO.
Control box	DMG 971 Mod. 01	0351001
Socket	Wiring base S98	75310
Insert plate	PG-Plate	70502
optional	Cable entry plate	70501
Flame detector	IRD 1020 end-on	16522
Flame detector	IRD 1020 left	16523
Flame detector	IRD 1020 right	16521
optional	UVD 971	16722
Support for IRD	Holder M93 for IRD 1020	59093
Support for UVD	Holder M74 for UVD	59074
Connection cable	Plug type, 3 core cable, 0.6 m with tag wire ends	7236001

The above ordering information refers to the standard version.
Special versions are also included in our product range.

Specifications subject to change without notice

Satronic AG
Brüelstrasse 7
Postfach 324
CH-8157 Dielsdorf

Gas Burner Safety Control

For 2-stage forced draught and combi oil/gas burners, facility to connect an air damper unit

Possible flame detectors:
- **Ionisation probe**
- **Infrared flicker detector 1020**
- **UV flame sensor UVD 971**



INTRODUCTION

The burner control box DMG 972 controls and supervises power burner for gas and dual fuel. The control box is approved and certified according the relevant European standards. The use on direct air heaters according DIN 4794 is also possible.
With the facility to connect an air damper unit, a 2 stage operation with two fuel valves or a modulating operation with one fuel valve is possible.
The microprocessor- based programming sequence ensures extremely stable timings independent of voltage variations, ambient temperature and/or switch-on cycles. The built-in information system not only provides a continuous monitoring of the actual state of the box (very helpful especially for monitoring the start-up phase) but also informs about the cause of a possible lock out. The lock out cause is stored in such a way that it can be retrieved even after a power failure.
The control box is designed for maximum safety in case of fluctuations in the voltage supply. If the mains voltage drops below the permitted level, operation is interrupted and the control box automatically prevents the start sequence from being repeated. In this way, the safety of the system is not put at risk by a drop in the mains voltage. This low-voltage protection works not only during start-up but also permanently during operation.

CONSTRUCTIONAL FEATURES

Microprocessor, electronic components, output relais and flame amplifier are placed on two printed circuit boards. These plus the lockout- and reset circuit are well protected inside a flame resistant, plug-in type plastic housing.
The reset switch for reset / remote lockout with its built-in LED for displaying the information system plus the central fixing screw are placed on top of the housing.
The wiring base S98 is equipped with spare- and extraterminals and allows together with a variety of cable entry points utmost flexibility of electrical wiring.
The DMG 972 is funstionally compatible to MMI 812, MMI 812.1, MMI 962 and MMI 962.1

Is the DMG 972 to be used to replace the MMI 812, 812.1, MMI 962 or MMI 962.1 care has to be taken to make sure the air proving switch (LW) is wired between terminals 4 and 7 and not like on the MMI between 5 and 7.

TECHNICAL DATA

Operating voltage	220 / 240 V (-15... +10%) 50 Hz (±5%)
Fuse rating	10 A fast, 6 A slow
Power consumption	ca. 15 VA
Max. load per output	
- term. 3 ignition trafo	1.5 A, cos φ 0.2
- term. 4 motor	2.0 A, cos φ 0.4
- term. 5 + 6 solenoid valves	1.0 A, cos φ 0.4
- term. C air damper	1.0 A, cos φ 0.4
- term. B alarm indicator	1.0 A, cos φ 0.4
total load	5.0 A, cos φ 0.4 max. 10 A during 0.5 sec
Air proving switch	1 working contact 4 A, 230V
Sensitivity (operation)	1 µA
Min. required ion. current	1.5 µA
Sensitivity for stray light	0.4µA
Ionisation probe insulation	Probe - earth greater than 50 MΩ
stray capacity	Probe - earth less than 1000 pF
cable lenght	< 3 m
Flame detectors	
IRD 1020	side-on or end-on viewing
UVD 971	end-on viewing
Weight incl. Wiring base	190 g
Mounting position	any
Protection class	IP 40
Approved ambient parameter for control and flame detector	max. 95% at 30° C
- for operation	-20° C... +60° C
- for storage	-20° C... +80° C
Build-up of ice, penetration of water and condensing water are inadmissible	
Approvals according to European standards	EN 298 and EN 230, as well as all other relevant Directives and standards
Classified acc. to EN 298	FTLLXN

Timings (sec.)

Model	waiting time start	max. reaction time for air proving switch **tlw**	supervised pre-purge time **tv1**	pre-ignition time **tvz**	LK-open command during pre-purge **tkl**	LK-close movement **tr**	ignition time total **tz**	Stray light monitoring **tf**	safety time **ts**	delay terminal 6 **tv2**
01	0	60	44	3	36	8	5.5	5	3	6

0737.12-00-e/01/99

APPLICATION FEATURES

1. Information system

The information system is microprocessor based and reports on all aspects of burner control box operation and flame supervision. It informs continuously about the actual programming sequence the unit is just performing. Besides monitoring of the programming sequence it also allows to identify errors during start-up of operation without any additional testing devices. The automatically performed diagnosis is a valuable tool which facilitates service/ maintenance work and therefore saves costs. The analyses of the error cause can be done directly on stage or if not possible afterwards as the lock out reason is stored in a non-volatile lock out mode memory.
The information system communicates with the outside world using a LED (the used Flash-Code is similar to the Morse-Code). The messages are optically transmitted by a appropriately flashing LED. Using an additional terminal (optional), the messages can be recorded and displayed in easy readable form.

1.1 Programming sequence display

The built-in microprocessor controls not only the programming sequence but the information system too. The individual phases of the programming sequence are displayed as Flash-Code.
The following messages can be distinguished:

Message	Flash-Code
waiting for air proving switch	I I .
pre-purge tv1	I I I .
pre-ignition tvz	I I I I .
safety time ts	▮ I .
delay 2nd stage tv2	▮ I I .
running	I _
low mains voltage	I ▮ ▮ _

Description
I = short pulse
▮ = long pulse
. = short pause
_ = long pause

1.2 Lock-out diagnoses

In case of a failure the LED is permanently illuminated. Every 10 seconds the illumination is interrupted by a flash code, which indicates the cause of the error. Therefore the following sequence is performed which is repeated as long as the unit is not reset.

Sequence:

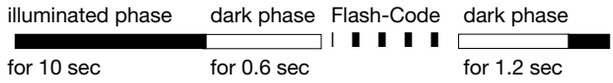

Error diagnosis

Error message	Flash-Code	Possible fault
lock out safety time	I ▮ ▮ ▮ ▮	within lock out safety time no flame establishment
stray light	I I ▮ ▮ ▮	stray light during monitored phase, detector may be faulty
air proving switch in closed position	▮ ▮ I I I	air proving switch contact welded
air proving switch time-out	I I I ▮ ▮	air proving switch does not close within specified time
air proving switch opened	I I I I ▮	air proving switch opens during start or operation
loss of flame	▮ ▮ ▮ ▮ I	loss of flame during operation

Flash-Code for manual lock out	
anual/external lock out (see also 3. lock out and reset)	I I ▮ ▮ ▮ _ ▮ ▮ ▮ ▮ ▮

2. Flame detection

The following types of flame detectors are suitable:
– Ionisation probe, temperature resistant material, well insulated (material and insulation same as for ignition electrode).
– Infrared-flicker detector type IRD 1020 with mounting flange M 93 or the UV solid state flame sensor UVD 971.

Flame detection using an ionisation probe is only possible in conjunction with mains supplies which provides a neutral earth connection.
Connecting the IRD 1020 or UVD 971 the correct wiring has to be observed.

2.1 Stray light monitoring

The stray light check is performed at the end of the prepurge time for thr duration as mentioned in the technical datas.

DMG 972

3. Lock out and reset

The unit can be reset or brought into lock out mode in two different ways:

Internal
In the lock out case the unit can be reset by pushing the built-in button meaning a new start-up cycle is performed.

External
Instead of using the built-in lock out button the same function can be achieved by using an external button which connects terminal 9 with A (see also circuit and block diagram).

If the pushputton (internal or external) is pressed during normal operation or during the start sequence for more then 3 sec. and afterwards released, the control box will perform a shutdown.



Please note
The unit can only be brought to lockout mode or be reseted if power is applied to the unit.

4. Low-voltage protection

The mains voltage has to be more than 187 V_{eff} in order to allow the unit to perform a start-up.
The mains voltage is not only monitored in the start-up phase but also permanently during operation. If the voltage drops below < 160 V_{eff} during start-up or run time the control box goes into lock out mode. If the voltage rises again, the control box performs automatically a start-up as soon as the mains voltage is > 187 V_{eff}.

5. Safety

The design and control sequence of the DMG 972 controls will comply with the currently applicable standards and regulations (see also TECHNICAL DATA).

6. Burner with an air damper motor



The position of the air damper during pre-purge has to be assured by suitable actions (EN 676, 4.4.1.2).

7. Mounting and electrical wiring

Wiring base:
- 3 earth terminals with additional terminal for burner earthing
- 3 neutral terminals with internal permanent connection to neutral terminal 8
- 2 independant spare terminals (S1 and S2)
- extra terminals A, B and C are standard
- 2 slide-in plates and 2 easy knock out holes (PG11 thread) plus 2 knock out holes in the base bottom faciliate the base wiring

The digital controls are ideally wiried on the new wiring bases S98, which are equipped with (terminals B and C are only for some special types of DMO or DMG) terminal A,. which is used for the remote reset / remote lockout functions.



Please note
To assist trouble-free operation the main neutral connection terminal in the wiring base must be fully tightened. The terminal screws are already in the undone position. To connect a wire to the terminal, the screw only needs to be fastened.

General: The control box and detector probes should not be subjected to excessive vibration.

INSTALLATION INSTRUCTIONS AND MAINTENANCE

1. Important notes

- The controls must be installed by qualified personnel only. The relevant national regulations have to be observed.
- On commissioning the wiring has to be carefully checked according the appropriate diagram, Incorrect wiring can damage the unit and endanger the installation.
- The fuse rating has to ensure that the limits specified in TECHNICAL DATA will not be exceeded. If these precautions are not observed, the effect of a short circuit can cause severe damage to the control and installation.
- For safety reasons a minimum of one control shutdown per 24 hours has to be observed.
- Disconnect the mains before the control box is plugged in or out.
- The control box is a safety device and must not be opened!

2. Function control

For safety reasons the flame detection system should be tested on commissioning the installation as well as after a service or longer shut-down.

a) Start-up with closed gas valve
   - After lock out safety time is over the unit has to go into lock out mode!

b) Normal start-up, when burner is running, close gas valve
   - After loss of flame, the control box has to go into lockout mode

c) Normal start-up, during pre-purge or operation, interrupt the air proving switch
   - The control box has to perform a lockout immediatly

d) Bridged air proving switch before start
   - the fan motor switches on for approx. 2 - 3 secs, followed by a lockout. After 10 secs., this quick lockout is resetted by the control box and a second start attempt follows (fan motor switches on for approx. 2 - 3 secs.). A standard lockout appears if the air proving switch (LW) contact is still in it's closed position (e.g. welded contacts). Has the air proving switch (LW) changed to it's open position in the meantime (e.g. by a run down motor), a normal start sequence follows.

3. Fault finding

The built-in information system facilitates the trouble shooting in the case of problems occurring during start-up or during operation.
A list of possible lock out messages can be found in APPLICATION FEATURES chapter 1.2.



Please note:
The control box is locked in lock out mode and the reasen for the lock out is displayed until the control box is reset, either by an internal or external reset (see also subject "3. Lock out and reset").

Removing the control box from its wiring base or by interrupting the supply line may **not** reset a lock out. Therefore, by applying power, the fan motor switches on for 2-3 secs. before the control box goes to lock out again and the cause of the last lock out.

Error	Possible fault
Burner not working	- Thermostat circuit open - Faulty electrical wiring - mains voltage < 187 V
Fan motor/nozzle preheater starts for a short period of time, control box goes to lock out	- Control box has not been reset - Air proving switch not in open position
Control box locks out during pre-purge	- Air proving switch open
Control box locks out at the end of pre-purge	- Air proving switch open - Flame signal
Burner starts, flame not established, lock out	- No ignition or no fuel
Burner starts, flame established, after safety time, lock out	- No or too low flame signal (flame does not stick, bad insulation of the ionisation probe, bad connection to frame ground) - Insufficient light on IRD - Sensitivity adjustment too low on IRD

DMG 972

CIRCUIT AND TIMING DIAGRAM DMG 972 WITH AIR DAMPER MOTOR

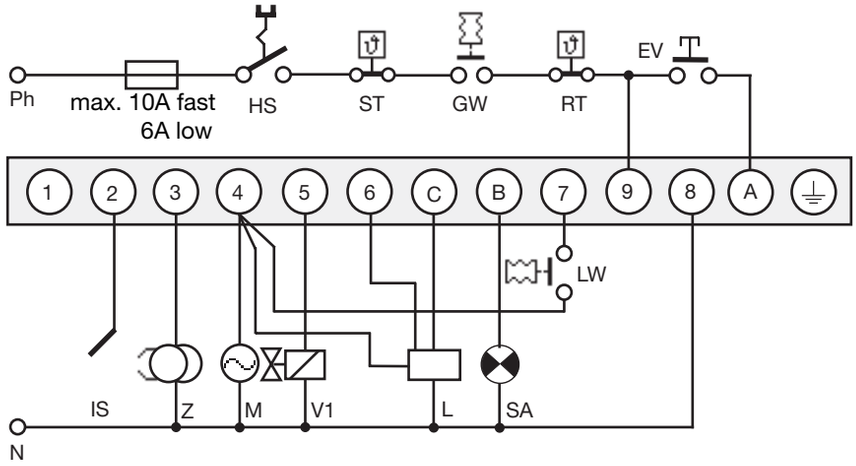

WITHOUT AIR DAMPER MOTOR

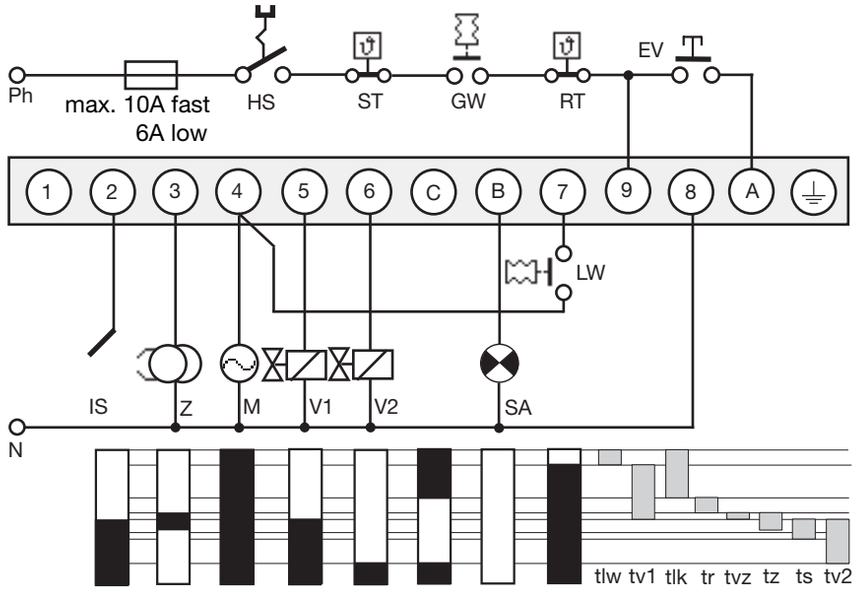

HS	Mains switch
GW	Gas proving switch
ST	Limit thermostat
RT	Control thermostat
EV	External reset and lock out button
IS	Ionisation probe (IRD 1010, UVD 970 see separate diagram)
Z	Ignition
M	Burner motor
V1	Solenoid valve, 1st-stage
V2	Solenoid valve, 2nd-stage
LW	Air proving switch
SA	External lock out signal
L	Air damper motor
tlw	max. reaction time for air proving switch
tv1	Supervised pre-purge time
tlk	LK-open command during pre-purge
tr	LK-close movement
tvz	Pre-ignition time
tz	Ignition time total
ts	Safety time
tv2	Delay terminal 6

IRD- OR UVD CONNECTION

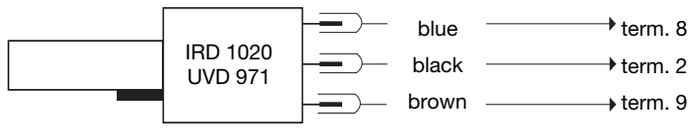

BLOCK DIAGRAM DMG 972

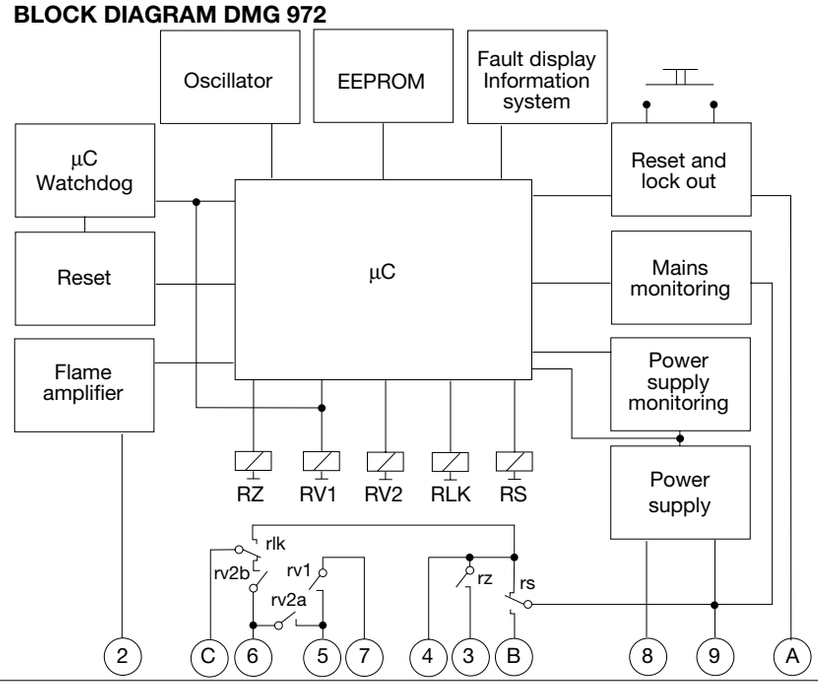

DMG 972

DMG 972 AND SOCKET

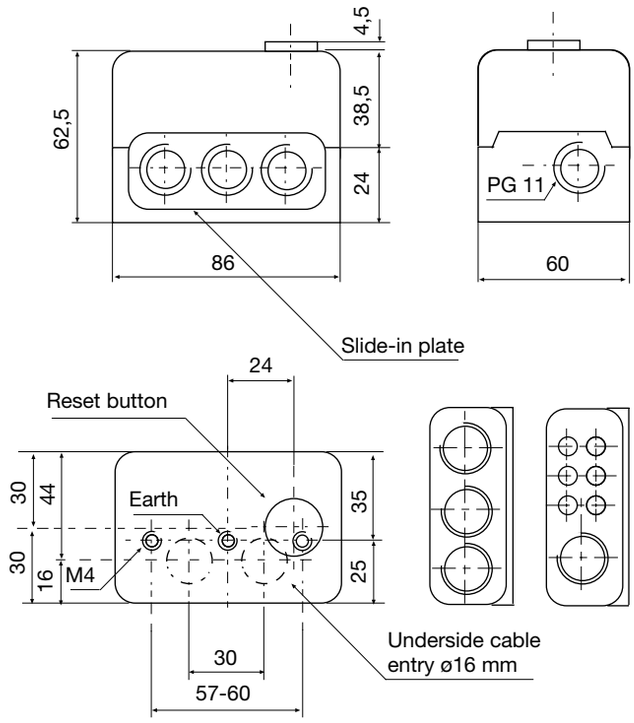

UVD 971

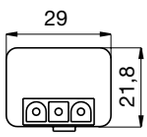

IRD 1020

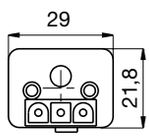

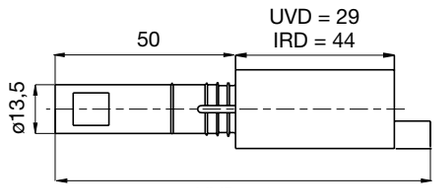

HOLDER M 93 FOR IRD

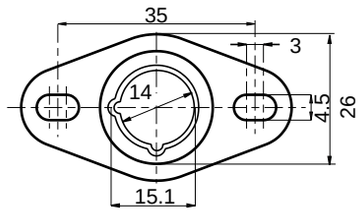

VARIATION IRD

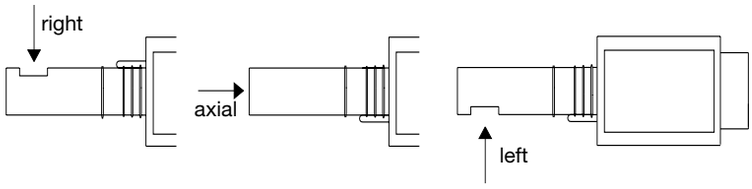

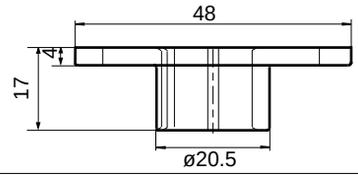

ORDERING INFORMATION

ITEM	DESIGNATION	ITEM NO.
Control box	DMG 972 Mod. 01	032001
Socket	Wiring base S98	75310
Insert plate	PG-Plate	70502
optional	Cable entry plate	70501
Flame detector	IRD 1020 end-on	16522
Flame detector	IRD 1020 left	16523
Flame detector	IRD 1020 right	16521
optional	UVD 971	16722
Support for IRD	Holder M93 for IRD 1020	59093
Support for UVD	Holder M74 for UVD	59074
Connection cable	Plug type, 3 core cable, 0.6 m with tag wire ends	7236001

The above ordering information refers to the standard version.
Special versions are also included in our product range.

Specifications subject to change without notice

Satronic AG
Brüelstrasse 7
Postfach 324
CH-8157 Dielsdorf

Gas Burner Safety Control

For 2-stage forced draught and combi oil/gas burners, facility to connect an air damper unit

Possible flame detectors:
- **Ionisation probe**
- **Infrared flicker detector 1020**
- **UV flame sensor UVD 971**



INTRODUCTION

The burner control box DMG 973 controls and supervises power burner for gas and dual fuel. The control box is currently under approval according the relevant European standards. The use on direct air heaters according DIN 4794 is also possible.
With the facility to connect an air damper unit, a 2 stage operation with two fuel valves or a modulating operation with one fuel valve is possible.
The microprocessor- based programming sequence ensures extremely stable timings independent of voltage variations, ambient temperature and/or switch-on cycles. The built-in information system not only provides a continuous monitoring of the actual state of the box (very helpful especially for monitoring the start-up phase) but also informs about the cause of a possible lock out. The lock out cause is stored in such a way that it can be retrieved even after a power failure.
The control box is designed for maximum safety in case of fluctuations in the voltage supply. If the mains voltage drops below the permitted level, operation is interrupted and the control box automatically prevents the start sequence from being repeated. In this way, the safety of the system is not put at risk by a drop in the mains voltage. This low-voltage protection works not only during start-up but also permanently during operation.

CONSTRUCTIONAL FEATURES

Microprocessor, electronic components, output relais and flame amplifier are placed on two printed circuit boards. These plus the lockout- and reset circuit are well protected inside a flame resistant, plug-in type plastic housing.
The reset switch for reset / remote lockout with its built-in LED for displaying the information system plus the central fixing screw are placed on top of the housing.
The wiring base S98 is equipped with spare- and extraterminals and allows together with a variety of cable entry points utmost flexibility of electrical wiring.
The DMG 973 is funstionally compatible to MMI 813 and MMI 813.1

Please note: Is the DMG 973 to be used to replace the MMI 813 or 813.1, care has to be taken to make sure the air proving switch (LW) is wired between terminals 4 and 7 and not like on the MMI between 5 and 7.

TECHNICAL DATA

Operating voltage	220 / 240 V (-15... +10%) 50 Hz (±5%)
Fuse rating	10 A fast, 6 A slow
Power consumption	ca. 15 VA
Max. load per output	
- term. 3 ignition trafo	1.5 A, cos φ 0.2
- term. 4 motor	2.0 A, cos φ 0.4
- term. 5 + 6 solenoid valves	1.0 A, cos φ 0.4
- term. C air damper	1.0 A, cos φ 0.4
- term. B alarm indicator	1.0 A, cos φ 0.4
total load	5.0 A, cos φ 0.4 max. 10 A during 0.5 sec
Air proving switch	1 working contact 4 A, 230V
Sensitivity (operation)	1 µA
Min. required ion. current	1.5 µA
Sensitivity for stray light	0.4µA
Ionisation probe insulation	Probe - earth greater than 50 MΩ
stray capacity	Probe - earth less than 1000 pF
cable lenght	< 3 m
Flame detectors	
IRD 1020	side-on or end-on viewing
UVD 971	end-on viewing
Weight incl. Wiring base	190 g
Mounting position	any
Protection class	IP 40
Approved ambient parameter for control and flame detector	max. 95% at 30° C
- for operation	-20° C... +60° C
- for storage	-20° C... +80° C
Build-up of ice, penetration of water and condensing water are inadmissible	
Approvals according to European standards	EN 298 and EN 230, as well as all other relevant Directives and standards
Classified acc. to EN 298	FTLLXN

Timings (sec.)

Model	waiting time start	max. reaction time for air proving switch **tlw**	supervised pre-purge time **tv1**	pre-ignition time **tvz**	LK-open command during pre-purge **tkl**	LK-close movement **tr**	ignition time total **tz**	Stray light monitoring **tf**	safety time **ts**	delay terminal 6 **tv2**
01	0	60	44	3	36	8	5.5	5	3	6

0737.13-00-e/01/99

APPLICATION FEATURES

1. Information system

The information system is microprocessor based and reports on all aspects of burner control box operation and flame supervision. It informs continuously about the actual programming sequence the unit is just performing. Besides monitoring of the programming sequence it also allows to identify errors during start-up of operation without any additional testing devices. The automatically performed diagnosis is a valuable tool which facilitates service/ maintenance work and therefore saves costs. The analyses of the error cause can be done directly on stage or if not possible afterwards as the lock out reason is stored in a non-volatile lock out mode memory.
The information system communicates with the outside world using a LED (the used Flash-Code is similar to the Morse-Code). The messages are optically transmitted by a appropriately flashing LED. Using an additional terminal (optional), the messages can be recorded and displayed in easy readable form.

1.1 Programming sequence display

The built-in microprocessor controls not only the programming sequence but the information system too. The individual phases of the programming sequence are displayed as Flash-Code.
The following messages can be distinguished:

Message	Flash-Code
waiting for air proving switch	I I .
pre-purge tv1	I I I .
pre-ignition tvz	I I I I .
safety time ts	▮ I .
delay 2nd stage tv2	▮ I I .
running	I _
low mains voltage	I ▮ ▮ _

Description
I = short pulse
▮ = long pulse
. = short pause
_ = long pause

1.2 Lock-out diagnoses

In case of a failure the LED is permanently illuminated. Every 10 seconds the illumination is interrupted by a flash code, which indicates the cause of the error. Therefore the following sequence is performed which is repeated as long as the unit is not reset.

Sequence:

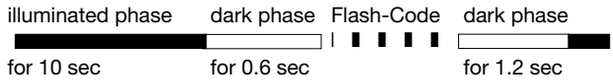

Error diagnosis

Error message	Flash-Code	Possible fault
lock out safety time	I ▮ ▮ ▮ ▮	within lock out safety time no flame establishment
stray light	I I ▮ ▮ ▮	stray light during monitored phase, detector may be faulty
air proving switch in closed position	▮ ▮ I I I	air proving switch contact welded
air proving switch time-out	I I I ▮ ▮	air proving switch does not close within specified time
air proving switch opened	I I I I ▮	air proving switch opens during start or operation
loss of flame	▮ ▮ ▮ ▮ I	loss of flame during operation

Flash-Code for manual lock out	
anual/external lock out (see also 3. lock out and reset)	I I ▮ ▮ ▮ _ ▮ ▮ ▮ ▮ ▮

2. Flame detection

The following types of flame detectors are suitable:
– Ionisation probe, temperature resistant material, well insulated (material and insulation same as for ignition electrode).
– Infrared-flicker detector type IRD 1020 with mounting flange M 93 or the UV solid state flame sensor UVD 971.

Flame detection using an ionisation probe is only possible in conjunction with mains supplies which provides a neutral earth connection.
Connecting the IRD 1020 or UVD 971 the correct wiring has to be observed.

2.1 Stray light monitoring

The stray light check is performed at the end of the pre-purge time for thr duration as mentioned in the technical datas.

DMG 973

3. Lock out and reset

The unit can be reset or brought into lock out mode in two different ways:

Internal
In the lock out case the unit can be reset by pushing the built-in button meaning a new start-up cycle is performed.

External
Instead of using the built-in lock out button the same function can be achieved by using an external button which connects terminal 9 with A (see also circuit and block diagram).

If the pushputton (internal or external) is pressed during normal operation or during the start sequence for more then 3 sec. and afterwards released, the control box will perform a shutdown.



Please note
The unit can only be brought to lockout mode or be reseted if power is applied to the unit.

4. Low-voltage protection

The mains voltage has to be more than 187 V_{eff} in order to allow the unit to perform a start-up.
The mains voltage is not only monitored in the start-up phase but also permanently during operation. If the voltage drops below < 160 V_{eff} during start-up or run time the control box goes into lock out mode. If the voltage rises again, the control box performs automatically a start-up as soon as the mains voltage is > 187 V_{eff}.

5. Safety

The design and control sequence of the DMG 970 controls will comply with the currently applicable standards and regulations (see also TECHNICAL DATA).

6. Burner with an air damper motor

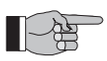

The position of the air damper during pre-purge has to be assured by suitable actions (EN 676, 4.4.1.2).

7. Mounting and electrical wiring

Wiring base:
- 3 earth terminals with additional terminal for burner earthing
- 3 neutral terminals with internal permanent connection to neutral terminal 8
- 2 independant spare terminals (S1 and S2)
- extra terminals A, B and C are standard
- 2 slide-in plates and 2 easy knock out holes (PG11 thread) plus 2 knock out holes in the base bottom faciliate the base wiring

The digital controls are ideally wiried on the new wiring bases S98, which are equipped with (terminals B and C are only for some special types of DMO or DMG) terminal A,. which is used for the remote reset / remote lockout functions.

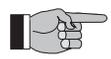

Please note
To assist trouble-free operation the main neutral connection terminal in the wiring base must be fully tightened. The terminal screws are already in the undone position. To connect a wire to the terminal, the screw only needs to be fastened.

General: The control box and detector probes should not be subjected to excessive vibration.

INSTALLATION INSTRUCTIONS AND MAINTENANCE

1. Important notes

- The controls must be installed by qualified personnel only. The relevant national regulations have to be observed.
- On commissioning the wiring has to be carefully checked according the appropriate diagram, Incorrect wiring can damage the unit and endanger the installation.
- The fuse rating has to ensure that the limits specified in TECHNICAL DATA will not be exceeded. If these precautions are not observed, the effect of a short circuit can cause severe damage to the control and installation.
- For safety reasons a minimum of one control shutdown per 24 hours has to be observed.
- Disconnect the mains before the control box is plugged in or out.
- The control box is a safety device and must not be opened!

2. Function control

For safety reasons the flame detection system should be tested on commissioning the installation as well as after a service or longer shut-down.

a) Start-up with closed gas valve
   - After lock out safety time is over the unit has to go into lock out mode!

b) Normal start-up, when burner is running, close gas valve
   - After loss of flame, the control box has to go into lockout mode

c) Normal start-up, during pre-purge or operation, interrupt the air proving switch
   - The control box has to perform a lockout immediatly

d) Bridged air proving switch before start
   - the fan motor switches on for approx. 2 - 3 secs, followed by a lockout. After 10 secs., this quick lockout is resetted by the control box and a second start attempt follows (fan motor switches on for approx. 2 - 3 secs.). A standard lockout appears if the air proving switch (LW) contact is still in it's closed position (e.g. welded contacts). Has the air proving switch (LW) changed to it's open position in the meantime (e.g. by a run down motor), a normal start sequence follows.

3. Fault finding

The built-in information system facilitates the trouble shooting in the case of problems occurring during start-up or during operation.
A list of possible lock out messages can be found in APPLICATION FEATURES chapter 1.2.



Please note:
The control box is locked in lock out mode and the reasen for the lock out is displayed until the control box is reset, either by an internal or external reset (see also subject "3. Lock out and reset").

Removing the control box from its wiring base or by interrupting the supply line may **not** reset a lock out. Therefore, by applying power, the fan motor switches on for 2-3 secs. before the control box goes to lock out again and the cause of the last lock out.

Error	Possible fault
Burner not working	- Thermostat circuit open - Faulty electrical wiring - mains voltage < 187 V
Fan motor/nozzle preheater starts for a short period of time, control box goes to lock out	- Control box has not been reset - Air proving switch not in open position
Control box locks out during pre-purge	- Air proving switch open
Control box locks out at the end of pre-purge	- Air proving switch open - Flame signal
Burner starts, flame not established, lock out	- No ignition or no fuel
Burner starts, flame established, after safety time, lock out	- No or too low flame signal (flame does not stick, bad insulation of the ionisation probe, bad connection to frame ground) - Insufficient light on IRD - Sensitivity adjustment too low on IRD

DMG 973

CIRCUIT AND TIMING DIAGRAM DMG 973 WITH AIR DAMPER MOTOR

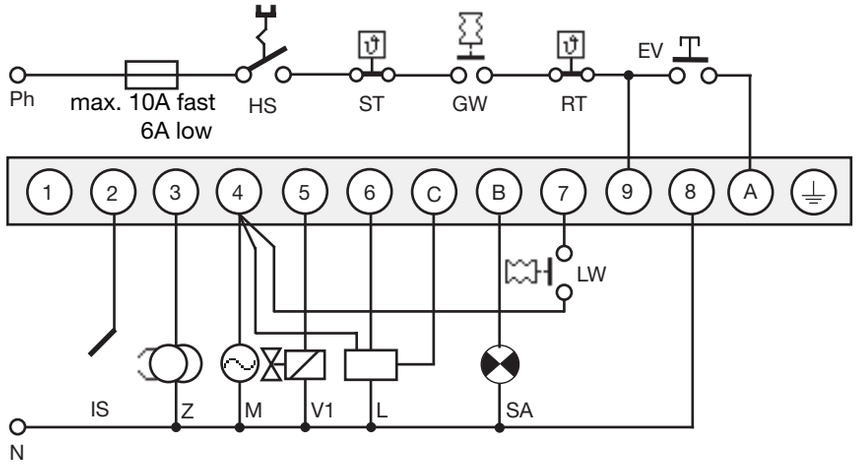

WITHOUT AIR DAMPER MOTOR

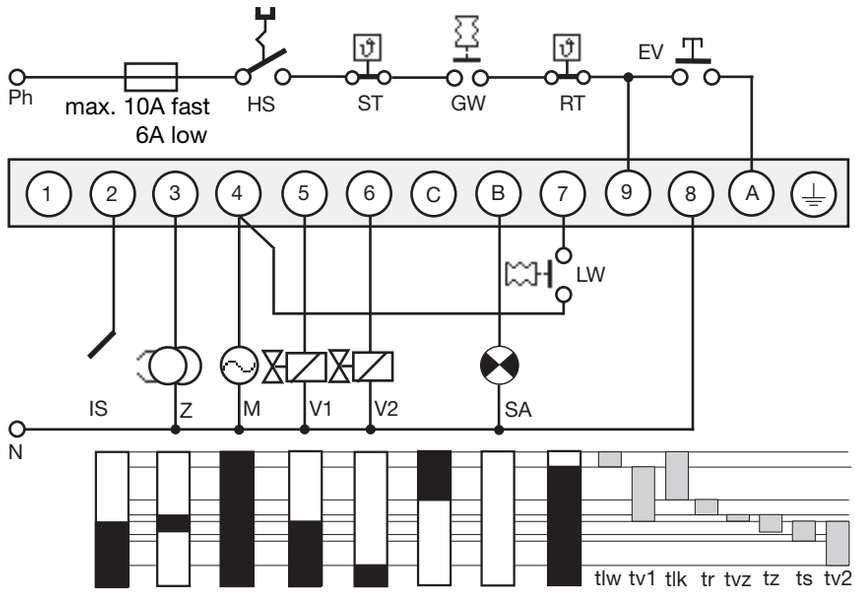

HS	Mains switch
GW	Gas proving switch
ST	Limit thermostat
RT	Control thermostat
EV	External reset and lock out button
IS	Ionisation probe (IRD 1010, UVD 970 see separate diagram)
Z	Ignition
M	Burner motor
V1	Solenoid valve, 1st-stage
V2	Solenoid valve, 2nd-stage
LW	Air proving switch
SA	External lock out signal
L	Air damper motor
tlw	max. reaction time for air proving switch
tv1	Supervised pre-purge time
tlk	LK-open command during pre-purge
tr	LK-close movement
tvz	Pre-ignition time
tz	Ignition time total
ts	Safety time
tv2	Delay terminal 6

IRD- OR UVD CONNECTION

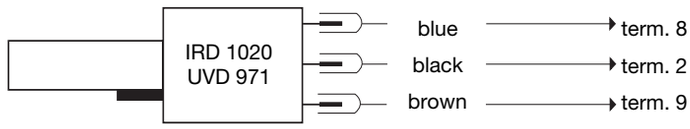

BLOCK DIAGRAM DMG 973

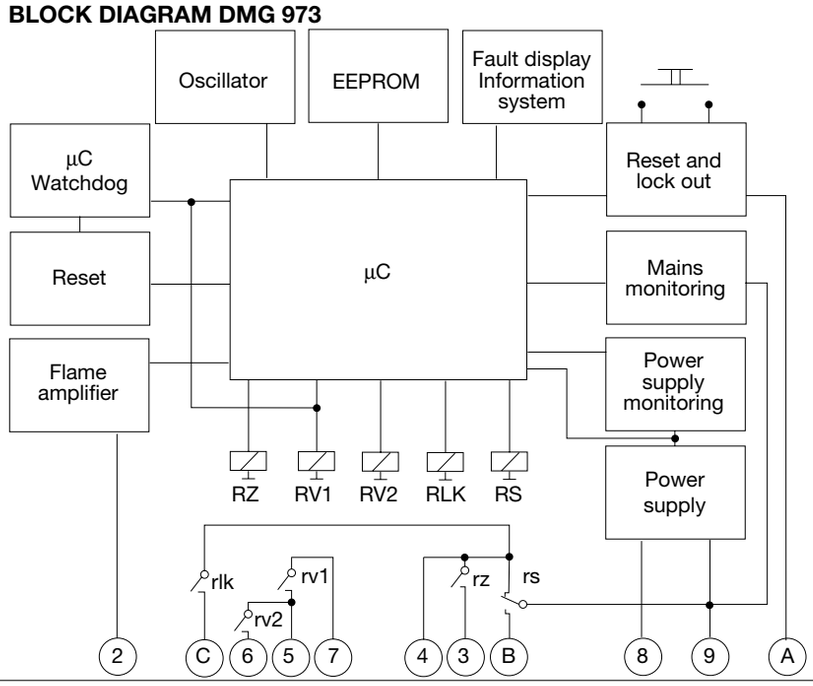

DMG 973

DMG 973 AND SOCKET

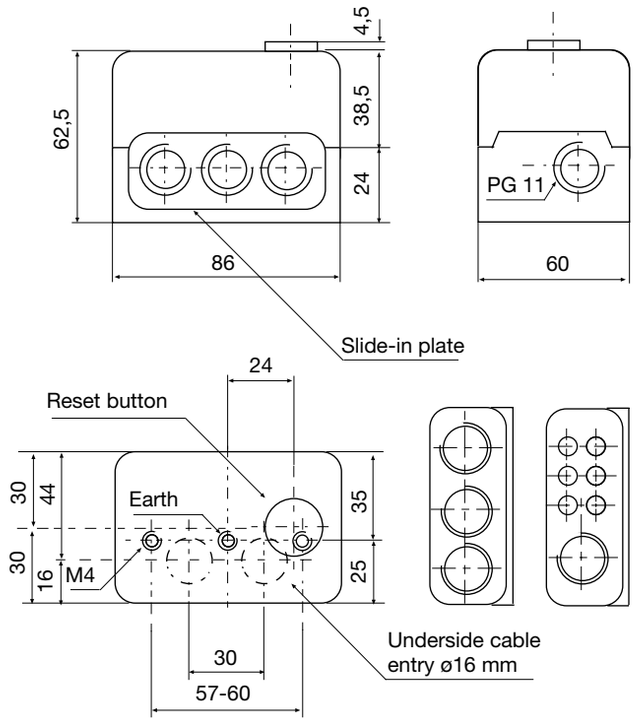

UVD 971

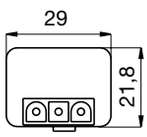

IRD 1020

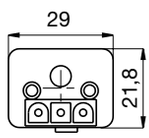

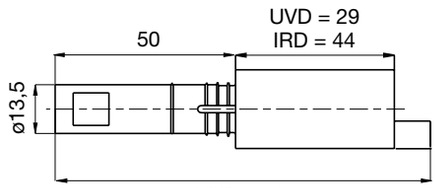

HOLDER M 93 FOR IRD

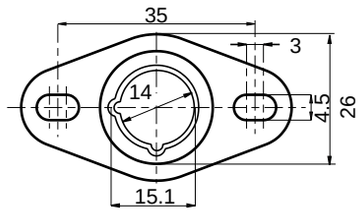

VARIATION IRD

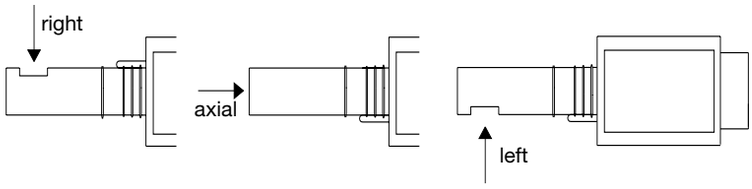

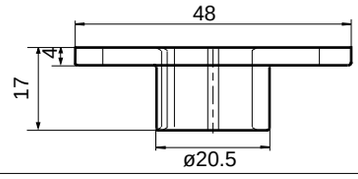

ORDERING INFORMATION

ITEM	DESIGNATION	ITEM NO.
Control box	DMG 973 Mod. 01	0353001
Socket	Wiring base S98	75310
Insert plate	PG-Plate	70502
optional	Cable entry plate	70501
Flame detector	IRD 1020 end-on	16522
Flame detector	IRD 1020 left	16523
Flame detector	IRD 1020 right	16521
optional	UVD 971	16722
Support for IRD	Holder M93 for IRD 1020	59093
Support for UVD	Holder M74 for UVD	59074
Connection cable	Plug type, 3 core cable, 0.6 m with tag wire ends	7236001

The above ordering information refers to the standard version.
Special versions are also included in our product range.

Specifications subject to change without notice

Satronic AG
Brüelstrasse 7
Postfach 324
CH-8157 Dielsdorf

Infrared Flicker Detector

Flame monitoring device for oil and/or gas flames

With a row of 5 LED indicators and adjustable sensitivity



INTRODUCTION

The IRD 810 or 820 is employed to monitor the flame of an oil and/or gas burner. This flame monitoring device should be connected to a Satronic oil or gas burner control box. Monitoring is based on the infra-red flicker principle, in other words, the flickering infra-red light of the flame is detected. The steady radiation from, for example, the glowing refractory layer on the inside of the boiler, has no effect on the detector. The detectors are also available in 110 V versions or in an industrial version which has a particularly robust and water-proof detector probe.

TYPES AVAILABLE

IRD 810	No potential difference at working contact 4-pole connection
IRD 820	With simulation of ionisation current For 3-pole connection to Satronic gas burner control boxes

CONSTRUCTIONAL FEATURES

The monitoring device consists of the detector probe and the electronics. The infra-red sensor and the pre-amplifier are hermetically sealed in glass and along with the electronics form an integral part of the flame detector.
The indicator control unit contains a mains transformer and a relay which transmits the flame signal to the appropriate control box via a working contact which carries no other potential difference. Signal strength is indicated by a row of 5 LED's. Beside the LED's is a potentiometer for infinitely variable adjustment of the sensitivity.
A fixed cable runs between the flame detector and the indicator control unit. This cable must not be disconnected. Power is supplied through either a 3 or 4-core cable (live, neutral and flame signal).

TECHNICAL DATA

Supply voltage	220 / 240 V (-15... +10%) 50 Hz (40 - 60 Hz)
Power consumption	2 VA
Max. current output terminal	2 A, 250 V
Permissible ambient temp.	-20° to +60° C
Insulation standard	IP 41
Mounting attitude	any
Weight	250 g
Flame viewing attitude	side-on and end-on
Spectral response	800 - 1100 nm
Max. sensitivity	950 nm
Frequency range	15 - 150 Hz
Max. sensitivity	30 Hz
Response time	0,1 sec.
Cancelling time	0,5 sec.
Cable length, detector - indicator ctrl. unit	
Normal version	0,5 m
Industrial version	1,0 m

TECHNICAL FEATURES

1. Oil and/or gas flames can be monitored.
2. The flame detector and indicator control unit are suitable for operation where the ambient temperature lies within the range -20° to +60° C. (Please contact the manufacturer for information on higher temperatures.)
3. The working contact carries no potential difference, allowing the flame signal to be transmitted over large distances.
4. The influence of possible stray light during the pre-purge phase or the intensity of the flame when the burner is operating is indicated by the row of 5 LED's. The status of the relay is visible at any time.
5. Sensitivity is adjustable.
6. The compact dimensions of the detector allow it to be installed on any burner.
7. The industrial version differs from the normal version by having a larger, robust, absolutely waterproof detector.
8. Unlike UV tubes, the IRD 810/820 flicker detector does not deteriorate with age.

INSTALLATION INSTRUCTIONS

1. The detector probe should be fitted so that it receives the light which pulsates most strongly. This can be achieved by positioning the detector as close as possible to the flame or by directing it at a particular zone of the flame.
2. No stray light must be allowed to fall on the detector (e.g. through cracks or from a sight glass). Pulsating stray light (e.g. from fluorescent lighting or light bulbs) could cause the system to switch to lockout.
3. The infra-red flicker detector should be fitted in such a way that the ambient temperature cannot under any circumstances rise above 60° C. At higher temperatures, there is a risk of incorrect operation and the life expectancy of the unit could be reduced. In addition, care should be taken that the detector is not subjected to unusually harsh vibration and receives no hard knocks.
4. The cable connecting the detector with the indicator control unit must not be disconnected. It must not, therefore, be shortened or lengthened.

COMMISSIONING AND MAINTENANCE

During commissioning and after servicing, the flame monitoring system should be checked for faultless operation as follows:

1. Check that the detector is connected properly. Wrong connections are a risk to safety, and could cause damage to the detector unit or burner system.
2. Adjust to maximum sensitivity and start the burner. After the start impulse, no LED should light up during the pre-purge phase.
3. With the system set for normal operation, pull out the detector probe and cover it up to cut off light. The LED indicators must go out. The control box should switch to lockout or attempt to restart the sequence.
4. Attempt to restart with the flame detector covered. There must be no indication from the LED's. The burner control box must switch to lockout at the end of the safety interval.
5. Attempt to start the burner with the detector exposed to stray light e.g. from fluorescent lighting, a cigarette lighter or light bulb (not daylight!). Depending on the type of control box, it should switch to lockout either immediately or at the end of the pre-purge, as a result of stray light.
6. Re-insert the detector into its mount. When the burner is operating normally, carefully turn back the sensitivity control until only one LED is lit. The control box must switch to lockout or restart the sequence.
7. Adjust the sensitivity to maximum. When the burner is operating normally, turn back the sensitivity control until only 4 LED's light continuously.
   We recommend this method of adjustment, because in this way, changes in the burner settings, dirty detector probe etc. or also the influence of stray light, can be detected very easily. (The internal relay is activated when 2 LED's light.)

The flame detection device requires no maintenance of any kind, and as it is classed as safety equipment, no attempt should be made to open the housing. The LED indicators should be checked visually at regular intervals. If a lower signal strength is indicated, it could mean that the burner settings have changed or that dirt and dust have reduced the amount of light reaching the detector.

Ionisation probe connection to oil burner control boxes

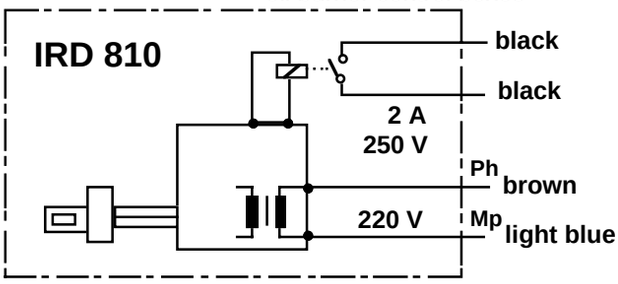

Ionisation probe connection to oil and gas burner control boxes

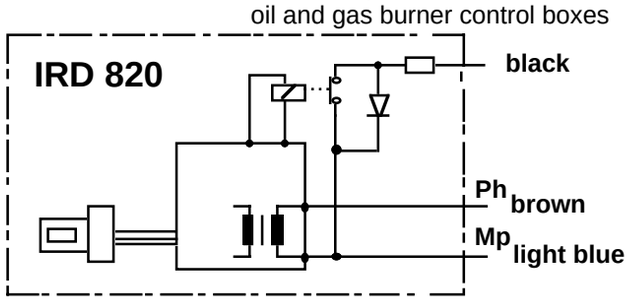

FAULT FINDING

1. LED's light up during the pre-purge phase (control box switches to lockout):

a) Stray light
b) Ignition spark visible to detector (only oil burners)
   Correct by preventing direct sight of ignition spark or install Satronic high-frequency ignition transformer.
c) Interference from ignition cable (lay cables some distance apart)
d) Live and neutral wired incorrectly
e) Burner not earthed/grounded
f) Detector or indicator control unit defective

2. No indication from LED's after establishment of flame:

a) Incorrect or faulty wiring
b) Detector probe incorrectly installed („sees" no light)
c) Detector is dirty
d) Sensitivity set at minimum
e) Detector probe or indicator control unit defective

CONNECTING THE IRD 810 TO SATRONIC OIL BURNER CONTROL BOXES (PHOTO-CELL CONNECTION)

Control box type corresponding terminal no.	IRD 810 - cable core colours				max. cable length IRD to control box (m)	
	brown	light blue	black	black	multiple cables	laid separately
TF 801	9	8	1	2	2	10
TF 802	9	8	1	2	2	10
TF 830	9	8	1	2	2	10
TF 832	9	8	1	2	2	10
TF 834	9	8	1	2	2	10
TMO 720- 4	20	8	1	2	2	200

CONNECTING THE IRD 820 TO SATRONIC OIL BURNER CONTROL BOXES (IONISATION PROBE CONNECTION)

Control box type corresponding terminal no.	IRD 820 - cable core colours				max. cable length IRD to control box (m)	
	brown	black	light blue		multiple cables	laid separately
MMI 810	9	2	8		2	200
MMI 812	9	2	8		2	200
MMG 810	9	2	8		2	200
TMG 740-2 / 740-3	20	1	8		2	200

IRD 810 AND 820 DETECTOR

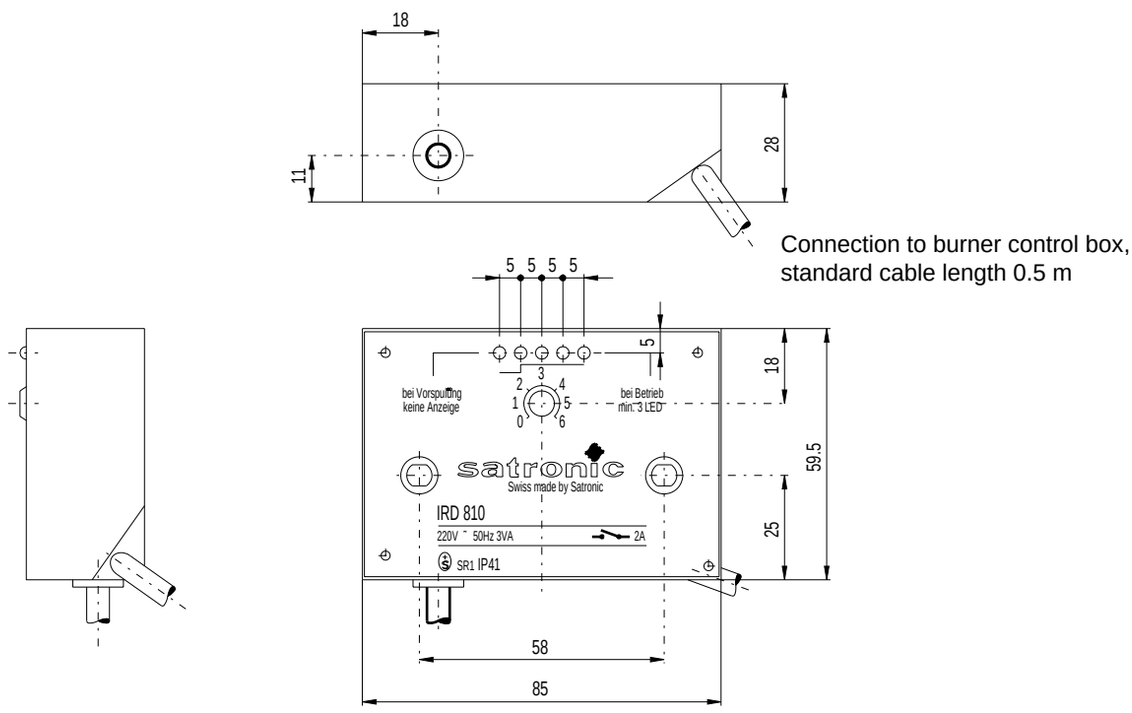

Connection to burner control box, standard cable length 0.5 m

IRD 810 AND 820 DETECTORS
NORMAL VERSION

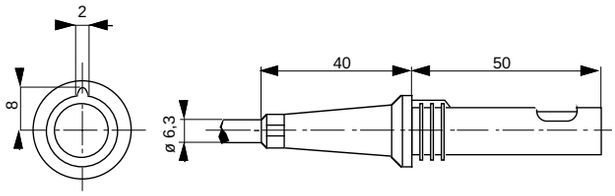

M 74 DETECTOR MOUNT
NORMAL VERSION

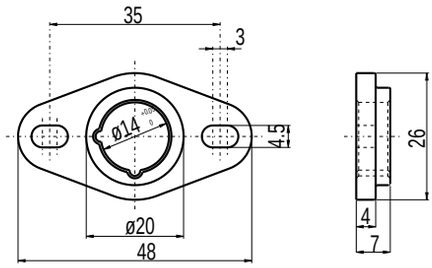

IRD 810 AND 820 DETECTORS
INDUSTRIAL VERSION

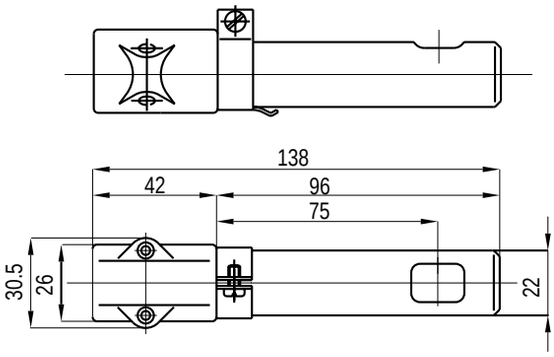

DETECTOR MOUNT
INDUSTRIAL VERSION

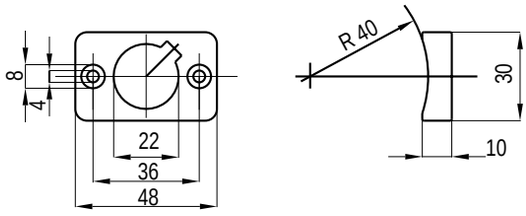

ORDERING INFORMATION

ITEM	DESIGNATION	ITEM NO.
Flame detector	IRD 810	16001
Flame detector	IRD 820	16201
Flame detector	IRD 810 Industrial	16002
Flame detector	IRD 820 Industrial	16202
Flame detector	IRD 810 110 volts	16021
Flame detector	IRD 820 110 volts	16221
Flame detector holder	FZ Holder M 68	59068
Flame detector holder	FZ Holder M 74	59074
Flame detector holder	FZ Holder M 75	59075
Holder	Industrial, UVZ + FZ	18807

The above ordering information refers to the standard version.
Spezial versions are also included in our product range.

Specifications subject to change without notice.

Satronic AG
Brüelstrasse 7
Postfach 324
CH-8157 Dielsdorf

Infra-red flicker detector

Flame monitoring device for yellow- or blue-burning oil flames



INTRODUCTION

The IRD 1010 is employed to monitor the flame of an oil burner. This flame monitoring device should be connected to a Satronic oil burner control box. Monitoring is based on the infra-red flicker principle, in other words, the flickering infra-red light of the flame is detected. The steady radiation from, for example, the glowing refractory layer on the inside of the boiler, has no effect on the detector. The IRD 1010 replaces the models IRD 910, 911 and 911 vi. If exchanging the units, care must be taken to connect them correctly (see page 3).

TYPES AVAILABLE (also see page 4, Variants)

Item no.	Designation
16501	Flicker detector IRD 1010 right
16502	Flicker detector IRD 1010 end-on
16503	Flicker detector IRD 1010 left

The infra-red flicker detector is suitable for use with the following control boxes:

IRD 1010	DKO 970, 972, 974, 976
	DKW 974, 976
	DMO 976
	TF 801, 802.1, 804
	TF 830.1, 832.1, 834.1, 834E.1, 834.2, 836
	TF 844, TF 974, 976
	MMD 900, 900.1,
	TTO 872, 876
	MMO 872, 876
	TMO 720-4

CONSTRUCTIONAL FEATURES

The infra-red sensor and the pre-amplifier are hermetically sealed in glass and along with the electronics form an integrated unit in the flame detector. Wiring is by way of a plug connection. The sensitivity control and two LED's for indication of the flame signal are situated on the rear of the flicker detector.

TECHNICAL DATA

Supply voltage	220 / 240 V (-15... +10%) 50 Hz (50 - 60 Hz)
Nominal current input	approx. 4 mA
Power consumption	1 VA
Ambient temperature	-20° C to +60° C
Insulation standard	IP 41
Mounting attitude	any
Weight	40 g
Flame viewing attitude	side-on or end-on according to type
Spectral response	800 - 1100 nm
(with daylight filter)	maximum 950 nm
Frequency range	15 Hz.... 250 Hz (-12 dB)
Sensitivity adjustment range	approx. 1 : 20 (26 dB)
Switch-on delay (after connecting operating voltage)	< 3.5 sec.
Response time	< 0.1 sec.
Cut-out time	< 1 sec.

TECHNICAL FEATURES

1. Flame detection

- Yellow- as well as blue-burning oil flames can be monitored.

- The flame detector is suitable for operation where the ambient temperature is within the range -20° to +60° C.

- The flickering detector IRD 1010 becomes active not before a minimum threshold-level of steady light is exceeded. That guarantees that neither electromagnetic- nor ignition-spark noise are affecting the IRD.

- Sensitivity is adjustable.

- LED 1 is a warning indicator for the pre-purge phase as well as normal operation. LED 2 indicates the actual status of the detector: On or off.

- During pre-purge, LED 1 indicates possible stray light, which may be produced either by a flickering or by a steady light source, before the detector switches on (LED 2).

- When the burner is operating normally, LED 1 acts as a warning indication of the flame signal current sensitivity being set too low - it begins to flicker or extinguishes before the detector switches off.

- The compact dimensions of the detector allow it to be installed on any burner. The detector shaft has the same dimensions as the FZ 711 S. It therefore also fits into the FZ holder M 74.

- Unlike UV tubes, the IRD 1010 flicker detector does not deteriorate with age.

2. Installation instructions

- The detector probe should be fitted so that it receives the light which pulsates most strongly. This can be achieved by positioning the detector as close as possible to the flame or by directing it at a particular zone of the flame (e.g. by using a sighting tube).

- No stray light must be allowed to fall on the detector (e.g. through cracks or from a sight glass). Pulsating stray light (e.g. from fluorescent lighting or light bulbs) could cause the system to switch to lockout. Due to the very high sensitivity of the detector, it should not be exposed directly or indirectly (reflections) to the ignition spark.

- The infra-red flicker detector should be fitted in such a way that the ambient temperature cannot under any circumstances rise above 60 °C. At higher temperatures, there is a risk of incorrect operation and the life expectancy of the unit could be reduced. In addition, care should be taken that the detector is not subjected to unusually harsh vibration and receives no hard knocks.

COMMISSIONING AND MAINTENANCE

During commissioning and after servicing, the flame monitoring system should be checked for faultless operation as follows:

1. Check that the detector is connected properly. Wrong connections are a risk to safety, and could cause damage to the detector unit or burner system.

2. Adjust to maximum sensitivity and start the burner: If the LED indicator is lit after the start impulse, carefully adjust the sensitivity control until LED 1 extinguishes. No LED should light up during the pre-purge phase.

3. With the system set for normal operation, pull out the detector probe and cover it up to cut off light. Both LED indicators must extinguish. The control box should switch to lockout or attempt to re-start the sequence.

4. Attempt to re-start with the flame detector covered. There must be no indication from the LED's after the start impulse. The burner control box must switch to lockout at the end of the safety interval.

5. Attempt to start the burner with the detector exposed to stray light e.g. from fluorescent lighting, a cigarette lighter or light bulb (not daylight or an electric torch): Depending on the type of control box, it should switch to lockout either immediately or at the end of the pre-purge, as a result of stray light.

6. When the burner is operating normally, carefully turn back the sensitivity control until LED 1 begins to flicker. Increase the setting again by one or two increments until both LED's are lit. If LED 1 does not flicker even at position 1: Leave potentiometer at position 1-2. This adjustment should be carried out when the flame signal current is weakest (shortly after flame establishment or after stabilisation).

The flame detection device requires no maintenance of any kind, and as it is classed as safety equipment, no attempt should be made to open the housing.

Because the nature of the flame can change in time due to the accumulation of dirt, the indicators on the detector should be checked periodically.

Please note:

Burner operating normally = both LED's on
Burner in pre-purge phase = both LED's off

For safety reasons the sensitivity must not be set higher than necessary.

Possible faults

1. **LED's light up during the pre-purge phase (control box switches to lockout):**
   a) Sensitivity set too high
   b) Stray light
   c) Ignition spark visible to detector (directly or reflection). Correct by preventing direct sight of ignition spark.
   d) Interference from ignition cable (lay cables some distance apart, or possibly screen the detector).

2. **No indication from LED's after establishment of flame:**
   a) Incorrect or faulty wiring
   b) Sensitivity set too low
   c) Detector positioned wrongly (receives no light)
   d) Detector or viewing window dirty
   e) Defective detector

IRD 1010 TERMINALS

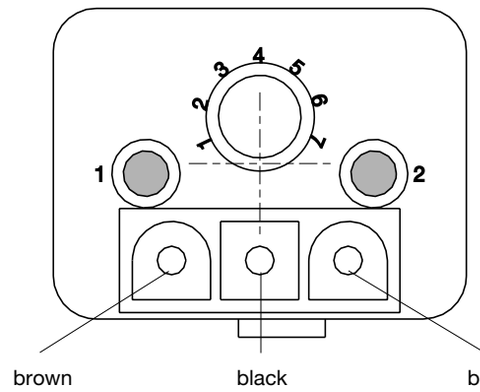

CONNECTION OF IRD 1010 TO SATRONIC BURNER CONTROL BOXES

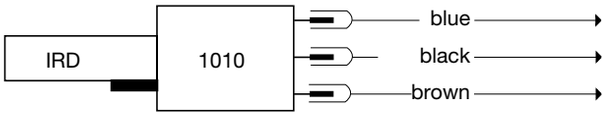

Control box type	TF 8..	TF 9..	DKO 9.. DKW 9.. DMO 9..
Terminal no.	2	7	2
Terminal no.	1	1	1
Terminal no.	9	9	9

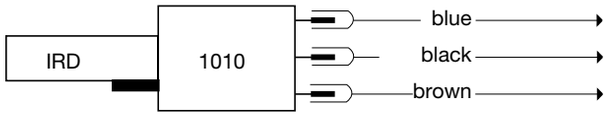

Control box type	MMD 900 MMD 900.1	TTO 872 [1] TTO 876 [1]	MMO 872 [1] MMO 876 [1]
Terminal no.	2	1 or 8	1 or 8
Terminal no.	1	2	2
Terminal no.	9	9	9

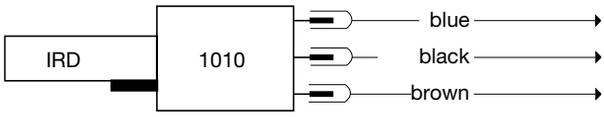

Control box type	TMO 720-4
Terminal no.	2
Terminal no.	1
Terminal no.	9

1) By installing the IRD/TTO adaptor cable (Item no. 72002) between the IRD 1010 and the detector cable in conjunction with the TTO 8.. or MMO 8.. control boxes, the uniform system of baseplate wiring (blue = terminal 2, brown = terminal 9, black = terminal 1) can be adhered to.

The standard-sensitive version of the IRD 1010 has a **blue** inprint. **White** or **red** inprints are marking detectors with special attributes.They may be used only on burners which are approved for these detectors.

HOLDER M74

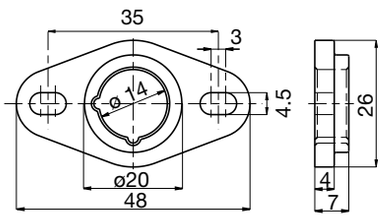

FLICKER DETECTOR IRD 1010

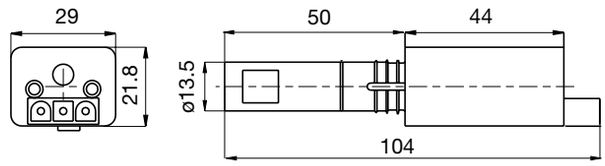

VARIANTS

Light entrance from right Item no. 16501

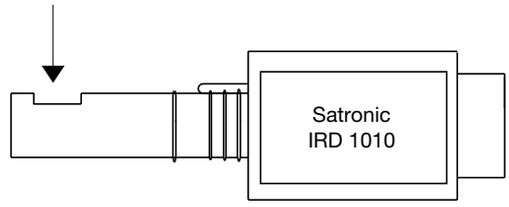

End-on light entrance Item no. 16502

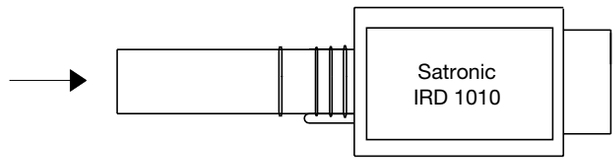

Light entrance from left Item no. 16503

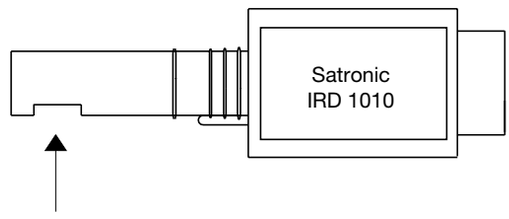

ORDERING INFORMATION

ITEM	DESIGNATION	ITEM NO.
Flame sensor	Flicker detector IRD 1010 right	16501
optional	Flicker detector IRD 1010 end-on	16502
optional	Flicker detector IRD 1010 left	16503
Mounting flange	Holder M74	59074
Connectioncable	Plug type, 3 core cable, 0.6 m with tag wire ends	7236001

The above ordering information refers to the standard version.
Special versions are also included in our product range.

Specifications subject to change without notice.

Infra-red flicker detector

Flame detection device for oil and gas flames



INTRODUCTION

The IRD 1020 detector is used to supervise gas or oil flames. This flame monitoring device should be connected to a Satronic oil burner control box. Monitoring is based on the infra-red flicker principle, in other words, the flickering infra-red light of the flame is detected. The steady radiation from, for example, the glowing refractory layer on the inside of the boiler, has no effect on the detector. The IRD 1020 replaces the IRD 920. When exchanging the units, care must be taken to wire them correctly.

TYPES AVAILABLE (also see page 4)

Item no.	Designation
16521	Flicker detector IRD 1020 side-on-right
16522	Flicker detector IRD 1020 end-on viewing
16523	Flicker detector IRD 1020 side-on left

The infra-red flicker detector can be used with any one of the following control boxes:

IRD 1020	DKG 972
	DLG 974, 976
	DMG 970, 971, 972, 973
	TFI 812.2
	MMI 810, 811, 812, 815, 816, 962
	MMG 810, 811, 816,
	TMG 740-2, 740-3
	SGU 930, 930i

CONSTRUCTIONAL FEATURES

The infra-red sensor and the pre-amplifier are hermetically sealed in glass and along with the electronics form an integrated unit in the flame detector. Wiring is by way of a plug connection. The sensitivity control and two LED's for indication of the flame signal are situated on the rear of the flicker detector.

TECHNICAL DATA

Supply voltage	220 / 240 V (-15... +10%) 50 Hz (50 - 60 Hz)
Nominal current input	approx. 4 mA
Power consumption	1 VA
Ambient temperature	-20° C to +60° C
Insulation standard	IP 41
Mounting attitude	any
Weight	40 g
Flame viewing attitude	side-on or end-on according to type
Spectral response	800 - 1100 nm
(with daylight filter)	maximum 950 nm
Frequency range	15 Hz.... 250 Hz (-12 dB)
Sensitivity adjustment range	approx. 1 : 20 (26 dB)
Switch-on delay (after connecting operating voltage)	< 3.5 sec.
Response time	< 0.1 sec.
Cut-out time	< 1 sec.

TECHNICAL FEATURES

1. Flame detection

- Yellow- as well as blue-burning oil- and gas flames can be monitored.
- The flame detector is suitable for operation where the ambient temperature is within the range -20° to +60° C.
- The flickering detector IRD 1020 becomes active not before a minimum threshold-level of steady light is exceeded. That guarantees that neither electromagnetic- nor ignition-spark noise are affecting the IRD.
- Sensitivity is adjustable.
- LED 1 is a warning indicator for the pre-purge phase as well as normal operation. LED 2 indicates the actual status of the detector: On or off.
- During pre-purge, LED 1 indicates possible stray light, which may be produced either by a flickering or by a steady light source, before the detector switches on (LED 2).
- When the burner is operating normally, LED 1 acts as a warning indication of the flame signal current sensitivity being set too low - it begins to flicker or extinguishes before the detector switches off.
- The compact size makes it possible to mount the detector on any burner. For this reason the IRD mounting flange M93 has the same dimensions and fixing holes as the FZ flange M74. This magnetic flange provides the switch-off facility specified in the European standard. The IRD 1020 therefore only functions with the M93 flange.
- Unlike the ultra-violet cell, the parameters of the IRD 1020 do not change with ageing.

2. Installation instructions

- The detector probe should be fitted so that it receives the light which pulsates most strongly. This can be achieved by positioning the detector as close as possible to the flame or by directing it at a particular zone of the flame (e.g. by using a sighting tube).
- No stray light must be allowed to fall on the detector (e.g. through cracks or from a sight glass). Pulsating stray light (e.g. from fluorescent lighting or light bulbs) could cause the system to switch to lockout. Due to the very high sensitivity of the detector, it should not be exposed directly or indirectly (reflections) to the ignition spark.
- The infra-red flicker detector should be fitted in such a way that the ambient temperature cannot under any circumstances rise above 60 °C. At higher temperatures, there is a risk of incorrect operation and the life expectancy of the unit could be reduced. In addition, care should be taken that the detector is not subjected to unusually harsh vibration and receives no hard knocks.
- It is necessary for the magnetic IRD M93 flange to be mounted on a flat surface to avoid any mechanical stress which could otherwise damage it.

COMMISSIONING AND MAINTENANCE

During commissioning and after servicing, the flame monitoring system should be checked for faultless operation as follows:

- Check that the detector is connected properly. Wrong connections are a risk to safety, and could cause damage to the detector unit or burner system.
- Adjust to maximum sensitivity and start the burner: If the LED indicator is lit after the start impulse, carefully adjust the sensitivity control until LED 1 extinguishes. No LED should light up during the pre-purge phase.
- With the system set for normal operation, pull out the detector probe and cover it up to cut off light. Both LED indicators must extinguish. The control box should switch to lockout or attempt to re-start the sequence.
- Attempt to re-start with the flame detector covered. There must be no indication from the LED's after the start impulse. The burner control box must switch to lockout at the end of the safety interval.
- Attempt to start the burner with the detector exposed to stray light e.g. from fluorescent lighting, a cigarette lighter or light bulb (not daylight or an electric torch): Depending on the type of control box, it should switch to lockout either immediately or at the end of the pre-purge, as a result of stray light.
- When the burner is operating normally, carefully turn back the sensitivity control until LED 1 begins to flicker. Increase the setting again by one or two increments until both LED's are lit. If LED 1 does not flicker even at position 1: Leave potentiometer at position 1-2. This adjustment should be carried out when the flame signal current is weakest (at a cold-start, shortly after flame establishment or after stabilisation).

The flame detection device requires no maintenance of any kind, and as it is classed as safety equipment, no attempt should be made to open the housing.
Because the nature of the flame can change in time due to the accumulation of dirt, the indicators on the detector should be checked periodically.

Please note:
Burner operating normally = both LED's on
Burner in pre-purge phase = both LED's off

For safety reasons the sensitivity must not be set higher than necessary.

Safety Checks:

1. Shut off the fuel supply when the burner is in the "run" position. The indicator LEDs should extinguish and the control box go to lockout.
2. Start the burner with the fuel supply shut off. The control box must go to lockout at the end of the safety time due to absence of flame.
3. Remove the detector from its mounting flange during a pause, fit onto it a second flange M93. Start the burner with straylight on the detector (e.g. by a cigarette-lighter, bulb or a neonlight. Daylight or a torch is not suitable). The control box must go to lockout due to stray light either immediately or at the end of the pre-purge, depending on the model.

Test switch-off facility:

1. Remove the detector durning the "run" position from its special M93 flange. The control box must go to lockout due to the activated switch-off facility.

Possible faults

1. **LED's light up during the pre-purge phase (control box switches to lockout):**
   a) Sensitivity set too high
   b) Stray light
   c) Ignition spark visible to detector (directly or reflection). Correct by preventing direct sight of ignition spark.
   d) Interference from ignition cable (lay cables some distance apart, or possibly screen the detector).

2. **No indication from LED's after establishment of flame:**
   a) Incorrect or faulty wiring
   b) Sensitivity set too low
   c) Detector positioned wrongly (receives no light)
   d) Detector or viewing window dirty
   e) Defective detector
   f) IRD flange M93 defective (cracks or other mechanical defects)

IRD 1020 TERMINALS

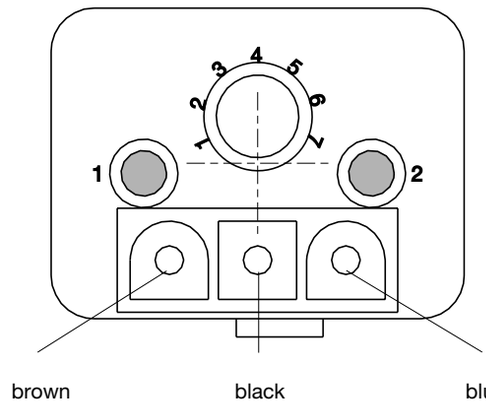

CONNECTION OF IRD 1020 TO SATRONIC BURNER CONTROL BOXES

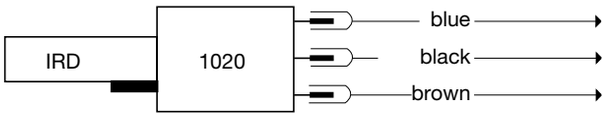

Control box type	TFI 812	DKG 97. DLG 97.	DMG 97.
Terminal no.	8	8	8
Terminal no.	1	1	2
Terminal no.	9	9	9

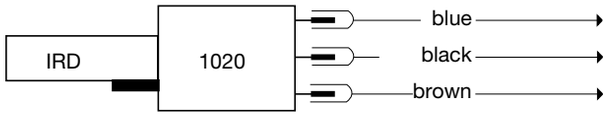

Control box type	MMI	MMG
Terminal no.	8	8
Terminal no.	2	2
Terminal no.	9	9

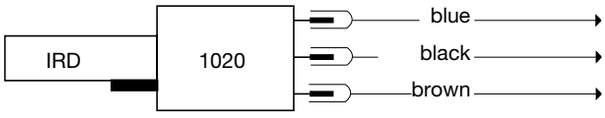

Control box type	TMG 740	SGU 930(i)
Terminal no.	8	N
Terminal no.	1	15
Terminal no.	20	1

The standard-sensitive version of the IRD 1020 has a **blue** inprint. **White** or **red** inprints are marking detectors with special attributes.They may be used only on burners which are approved for these detectors.

HOLDER M93

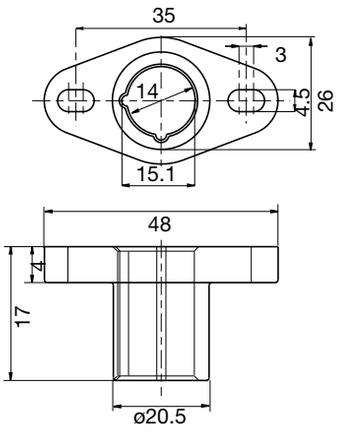

FLICKER DETECTOR IRD 1020

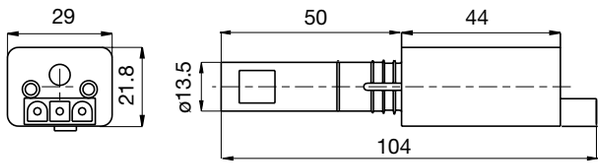

VARIANTS

Light entrance from right Item no. 16521

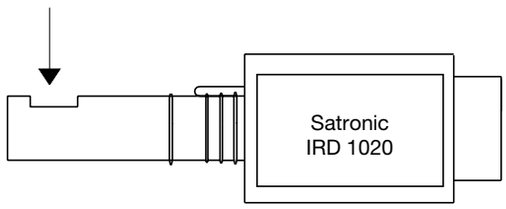

End-on light entrance Item no. 16522

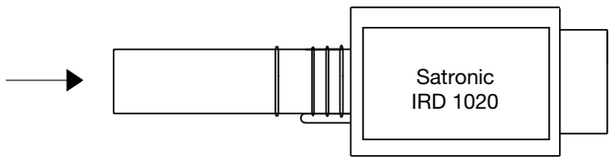

Light entrance from left Item no. 16523

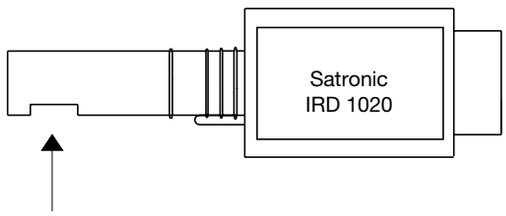

ORDERING INFORMATION

ITEM	DESIGNATION	ITEM NO.
Flame sensor	Flicker detector IRD 1020 side-on right	16521
optional	Flicker detector IRD 1020 end-on viewing	16522
optional	Flicker detector IRD 1020 side-on left	16523
Mounting flange	Flange M93	59093
Sensor cable	Plug type, 3-wire, 0.6 m with tag wire ends	7236001

The above ordering information refers to the standard version.
Special versions are also included in our product range.

Specifications subject to change without notice.

IRD 1020

satronic
A Honeywell Company

Satronic AG
Brüelstrasse 7
Postfach 324
CH-8157 Dielsdorf

UV-Flammenfühler

Flammenüberwachungseinrichtung für gelb oder blau brennende Öl- und Gasflammen

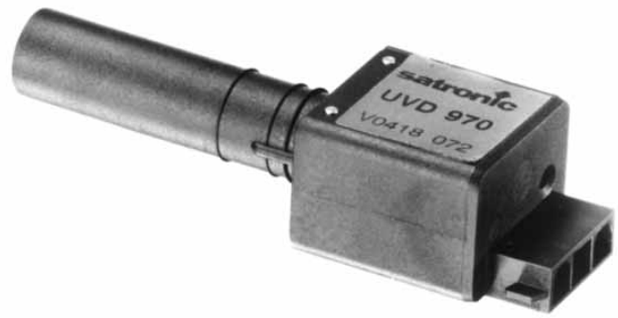

ANWENDUNGSBEREICH

Der Flammenfühler UVD 970/971 wird zur Überwachung von Öl- oder Gasflammen eingesetzt. Angeschlossen wird er an einen Satronic Feuerungsautomaten.
Der UVD 970/971 reagiert auf die ultraviolette Strahlung der Flamme. Auf sichtbares Licht und infrarote Strahlung ist er unempfindlich. Die ultraviolette Strahlung kommt direkt von der Flamme und nicht von glühenden Teilen im Hintergrund. Deshalb ist der UVD unempfindlich auf glühende Teile im Brennraum.

TYPENÜBERSICHT

Art.-Nr.	Artikel-Bezeichnung
16702	UVD 970 axial
16722	UVD 971 axial

Der UVD-Flammenfühler kann mit folgenden Steuergeräten betrieben werden:

Öl: UVD 970	DKO 970, 972, 974, 976
	DKW 974, 976
	DMO 976
	TF 801, 802, 804, 830, 832, 834, 836
	TF 844, 974, 976
	MMD 900, 900.1
	TTO 872, 876
	MMO 872, 876
	TMO 720-4
Gas: UVD 971	DKG 972
	DLG 974, 976
	DMG 970, 971, 972, 973
	TFI 812.2
	MMI 810, 811, 812, 813, 815, 816, 962
	MMG 810, 811, 816
	TMG 740-2, 740-3
	SGU 930, 930i

AUFBAU UND KONSTRUKTION

Im Flammenfühler UVD 970/971 ist eine UV-strahlungsempfindliche Diode eingebaut. Eine Quarzglaslinse konzentriert die Strahlung auf die lichtempfindliche Diodenfläche. Die spektrale Empfindlichkeit auf längerwellige Strahlungsanteile wird durch ein Filter eingeengt. Ein nachgeschalteter Verstärker mit digitalem Schaltverhalten verstärkt das Signal der Diode für den Flammenüberwachungskreis im Feuerungsautomaten.
Die Einheit ist in einem verkürzten IRD-Gehäuse untergebracht, der Anschluss erfolgt über eine 3-polige Steckverbindung. Steckerbelegung und Verschlüsselung sind gleich wie beim IRD 1010, resp. IRD 1020, sodass die beiden Fühlertypen kompatibel sind.

TECHNISCHE DATEN

Betriebsspannung	220 / 240 V (-15... +10%) 50 Hz
Nennstromaufnahme	< 10 mA
Eigenverbrauch	< 2 VA
Umgebungstemperatur	-20° C… +60° C
Schutzart	IP 41
Einbaulage	beliebig
Gewicht	ca. 25 g
Lichteinfall	axial
Spektralbereich	ca. 250 - 400 nm Maximum 310 nm
Einschaltverzögerung (nach Anlegen der Betriebsspannung)	< 0.1 s
Reaktionszeit	ca. 0.5 s
Abmeldezeit	< 0.9 s

ANWENDUNGSTECHNISCHE MERKMALE

1. Flammenüberwachung

- Es können sowohl gelb als auch blau brennende Flammen überwacht werden.

- Umgebungstemperatur -20° C... +60° C. Bei höheren Temperaturen sind Funktion und Lebensdauer gefährdet. Ferner ist darauf zu achten, dass das Gerät keinen übermässigen Vibrationen oder Schlägen ausgesetzt ist.

- Der UVD 970/971 erfährt im Gegensatz zu UV-Röhren keine Alterung.

2. Einbauvorschrift

- Der Fühler sollte so eingebaut werden, dass er nicht verschmutzen kann. Schmutzschichten lassen kein UV-Licht passieren. Ebenso beeinträchtigt ein Beschlagen durch Feuchtigkeit die Empfindlichkeit des Fühlers.

- Der Fühler muss direkte Sicht auf die Flamme haben. Eine indirekte Überwachung mit Reflexionen ist im UV-Bereich nicht möglich.

- Es darf kein Fremdlicht auf den Fühler fallen.

- Der UVD 970/971 reagiert auf den Zündfunken. Die Anordnung im Brenner muss deshalb so gewählt werden, dass der UVD den Zündfunken nicht sehen kann, da dies sonst eine Störabschaltung während der Vorspülung zur Folge hat.

Hinweis: Rezirkulationsgase können UV-Licht absorbieren. Die Überwachung mit Sicht durch Rezirkulationsgase kann daher problematisch sein.

INBETRIEBNAHME UND UNTERHALT

Bei Inbetriebsetzung der Anlage sowie nach Servicearbeiten überzeuge man sich vom einwandfreien Arbeiten der Flammenüberwachung wie folgt:

1. Kontrollieren, ob das Gerät richtig angeschlossen ist. Fehlanschlüsse gefährden die Sicherheit und können zu Beschädigungen an Gerät und Anlage führen.

2. Brenner starten.

3. In Betriebsstellung Fühler herausziehen und gut abdecken: Brennerautomat macht Störabschaltung oder Repetition.

4. Wiederanlauf mit abgedecktem Fühler: Der Brennerautomat muss nach Ablauf der Sicherheitszeit auf Störung schalten.

5. Brenneranlauf mit fremdbelichtetem Fühler z.B. Fluoreszenzlampe, Feuerzeug, Taschenlampe, Glühbirne, Tageslicht: Der Brennerautomat muss infolge Fremdlicht auf Störung schalten (je nach Automatentyp sofort oder nach Ablauf der Vorbelüftung).

Die Flammenüberwachungseinrichtung benötigt keinerlei Unterhalt. Da es sich um eine Sicherheitseinrichtung handelt, ist ein Öffnen derselben untersagt.

UVD-Testgerät

Mit dem UVD-Testgerät wird der bestimmungsgerechte Einsatz der UVD-Fühler wesentlich erleichtert.

Es sind damit 3 verschiedene Messarten möglich:

1. Anstelle des am Brenner montierten Flammenfühlers wird das Testgerät (mit IRD oder UVD steckerkompatibel) am Fühlerkabel angeschlossen und der Fühler des Testgerätes (Messfühler) in den Brenner eingesteckt. Schalter auf "Test" stellen. Brenner in Betrieb setzten (die sicherheitstechnische Flammenüberwachung wird gewährleistet). Auf der Anzeige kann die vorhandene Lichtmenge in Form eines Stromes abgelesen werden: Für einen korrekten Betrieb mit UVD-Flammenüberwachung sind minimal 40 µA erforderlich. Wird die Ausschaltgrenze des UVD erreicht, leuchtet eine rote LED auf. Blinkt diese LED während dem Brennerbetrieb öfters auf, weist dies auf ein geringes Flammensignal hin. An den zwei Buchsen des Messgerätes kann auch ein Schreiber oder Oszilloskop angeschlossen werden, um das Flammensignal genauer und/oder über eine längere Zeit zu betrachten. Ein Flammensignal von 100 µA ergibt an diesen Buchsen eine Spannung von 100 mV. Achtung: Dieser Ausgang ist mit dem Nulleiter des Netzes verbunden. Batteriebetriebene Geräte dürfen direkt angeschlossen werden, netzbetriebene Geräte müssen über einen Trenntransformator betrieben werden.

2. In der Schalterstellung "Betrieb" kann die Funktion einer vorhandenen UVD-Flammenüberwachung überprüft werden. Dazu wird das Testgerät (ohne Messfühler) zwischen Flammenfühler und Fühlerkabel eingesteckt (steckerkompatibel). Mit korrekt arbeitendem Fühler und Steuergerät erfolgt bei Flammenbildung die Anzeige des jeweiligen Fühlerstromes (abhängig vom verwendeten Steuergerät, nicht von der Flammenintensität). Bei fehlender Anzeige ist der Fühler oder das Steuergerät defekt.

3. Das Testgerät kann unabhängig von einem Steuergerät und dessen Flammenüberwachung zur Messung des Flammensignales eines Brenners eingesetzt werden. Das Testgerät wird dazu mit einem Spezialkabel direkt am Netz angeschlossen. In Betriebstellung des Brenners den Flammenfühler abziehen und "fremdbelichten". Achtung: Brenner ist nicht mehr korrekt überwacht! Anschliessend Messfühler des Testgerätes in den Brenner einstecken. Nun können in der Schalterstellung "Test" die gleichen Messungen unter denselben Bedingungen wie unter 1. erwähnt, ausgeführt werden.

Fehlermöglichkeiten

1. **Störabschaltung in Vorbelüftung:**
   a) Fremdlicht
   b) Fühler sieht Zündfunken (direkt oder indirekt)
   Gegenmassnahme:
   Direkte Sicht auf Zündfunken verhindern
   c) Zündkabel beeinflusst den Fühler
   (Leitungen getrennt führen, evtl. Fühler abschirmen)
   d) UVD defekt

2. **Keine Flammenmeldung (Störung nach Ende der Sicherheitszeit):**
   a) Verdrahtungsfehler
   b) Fühler falsch eingebaut (sieht kein Licht)
   c) Fühler oder Sichtrohr verschmutzt
   d) UVD defekt

ANSCHLUSSBELEGUNG UVD 970/971

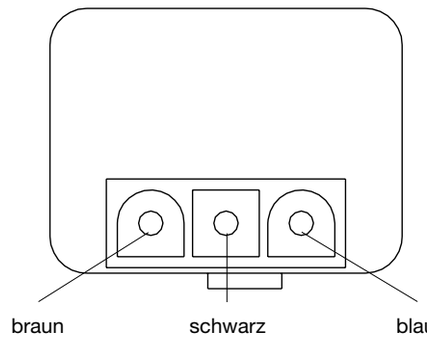

ANSCHLUSS UVD 970
AN SATRONIC - FEUERUNGSAUTOMATEN

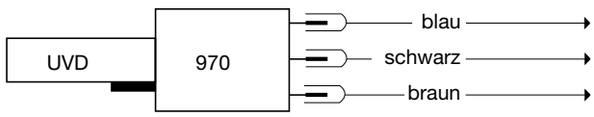

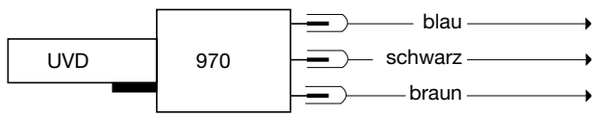

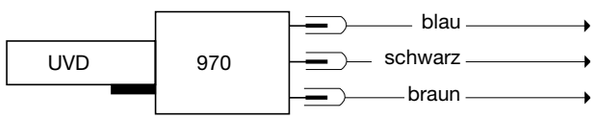

Steuergerätetyp	TF 8..	TF 9..	DKO 9.. DKW 9.. DMO 9..
Klemmen-Nr.	2	7	2
Klemmen-Nr.	1	1	1
Klemmen-Nr.	9	9	9

Steuergerätetyp	MMD 900 MMD 900.1	TTO 872 TTO 876 [1)]	MMO 872 [1)] MMO 876 [1)]
Klemmen-Nr.	2	1 oder 8	1 oder 8
Klemmen-Nr.	1	2	2
Klemmen-Nr.	9	9	9

Steuergerätetyp	TMO 720-4
Klemme-Nr.	2
Klemme-Nr.	1
Klemme-Nr.	9

1) Durch den Einbau des Adapterkabels IRD/TTO (Art.-Nr. 72002) zwischen UVD 970 und Fühlerkabel, in Verbindung mit den Feuerungsautomaten TTO 8.. oder MMO 8.., kann die einheitliche Sockelverdrahtung (blau = Kl 2, schwarz = Kl 1, braun = Kl 9) beibehalten werden.

ANSCHLUSS UVD 971
AN SATRONIC - FEUERUNGSAUTOMATEN

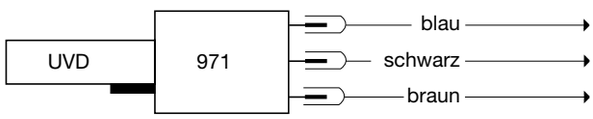

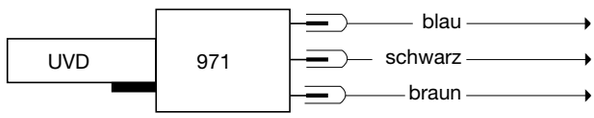

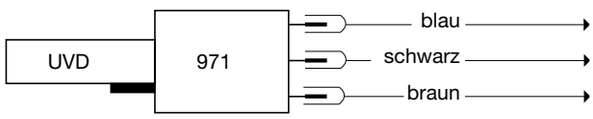

Steuergerätetyp	TFI 812	DKG 97. DLG 97.	DMG 97.
Klemme-Nr.	8	8	8
Klemme-Nr.	1	1	2
Klemme-Nr.	9	9	9

Steuergerätetyp	MMI	MMG
Klemme-Nr.	8	8
Klemme-Nr.	2	2
Klemme-Nr.	9	9

Steuergerätetyp	TMG 740	SGU 930(i)
Klemme-Nr.	8	N
Klemme-Nr.	1	15
Klemme-Nr.	20	1

ПРОМЭЛЕКТРОНИКА / sales@prom-elec.com

HALTER M 74

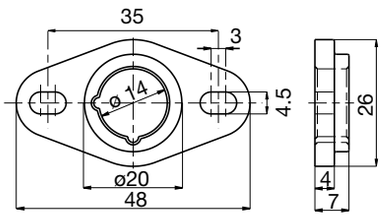

FLAMMENFÜHLER UVD 970/971

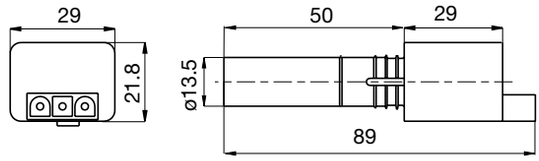

VARIANTEN

Lichteinfall axial Art.-Nr. 16702, 16722

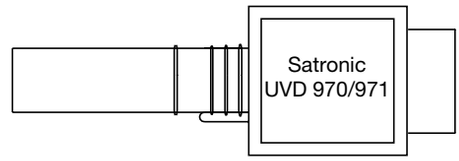

BESTELLANGABEN

ARTIKEL	BESTELLTEXT	ART. NR.
Flammenfühler	Flammenfühler UVD 970	16702
oder	Flammenfühler UVD 971	16722
Halter zu Flammenfühler	Halter M 74	59074
Anschlusskabel	Fühlerkabel 3-pol. 0.6 m, mit Aderendhülsen	7236001

Obige Bestellangaben beziehen sich auf die Normalausführung.
Das Verkaufsprogramm umfasst auch Spezialausführungen.

Technische Änderungen vorbehalten.

Satronic AG
Brüelstrasse 7
Postfach 324
CH-8157 Dielsdorf

Oil Flow Meter and Hours of Operation Counter

For single or two-stage oil burners with throughputs from1 to 40 l/h

- multifunctional
- mains or battery powered



INTRODUCTION

The oil flow meter and hours of operation counter is used on single or two-stage burners with throughput rates from 1 to 40 l/h of heating oil EL. It provides the user with various information, such as oil consumption, number of starts, hours of operation, etc. plus a warning indication if the flow rate falls below a preset nominal level, due to either an obstructed nozzle or filter. By identifying problems with the oil flow, inefficient combustion and air pollution may be corrected.
The sensor is mounted between the oil pump and the nozzle.
The display can be mounted anywhere on the burner. It is available in either a mains or battery powered version.

CONSTRUCTIONAL FEATURES

The sensor is an oval tooth-wheeled counter with very small dimensions (30 x 30 x 34 mm). The enclosed oil volume is only 2 ccm. The material used guarantees high accuracy and long life. A filter, which is easy to change, protects the sensor from any floating particles.
The display is enclosed in a plastic housing, which fits into a standard 22.2 x 45 mm cutout. Located on the front are a LCD display (6 digits, with leading-zero suppression, metered units, warning and operating mode symbols) and a push button switch for selecting the operating mode and resetting.

Connectors for the sensor and power cable, plus a code switch to select the operating mode, are located on the back. The connector for the power supply is only mounted on the mains powered version. The battery is located in a battery box.
The sensor is connected to the display by a 2 wire plug and cable.

TYPES AVAILABLE

SOG 960	sensor for heating oil EL
SOZ 960 B	display with battery
SOZ 960 N	display for mains supply

TECHNICAL DATA

Sensor SOG 960 for heating oil EL

Throughput	1 to 40 l/h
Max. pressure	< 25 bar
Ambient temp. range	0 to 60° C
Accuracy	±2,5% (at a volumetric weight of 830 g/dm^3)
Oil volume	2 ccm
Loss of pressure	≤ 0.1 bar
Electrical connection	2-wire AMP connector Modu 2 system
Oil connection	R 1/8"
Mounting attitude	Any
Weight	110 g

Display general

Front dimensions	48 x 24 mm
Cutout	45 x 22,2 mm (DIN 43700)
LCD display	6-digits, w. leading zero suppres.
Digit size	8 mm
Ambient temperature	0 to 60° C
Insulation standards	Front IP 65
(IEC 144)	Connectors IP 20
Mounting attitude	Any

Display SOZ 960 N mains

Supply voltage	220 / 240 V (-15... +10%) 50 Hz (40-60 Hz)
Current	10 mA
Power connector	2 wire Satronic connector
Sensor connector	2 wire AMP connector Modu 2 system
Display visible after loss of power	ca. 24 h (0-Serie: ca. 3 h)

Display SOZ 960 B battery

Lifetime of battery	ca. 5 years (0-Serie: ca. 3 years)
End-of-life warning	> 1 year before end-of-life
Data held during battery change	2 minutes
Battery	CR 14250, 3 V, 850 mAh
Sensor connector	2 wire AMP connector Modu 2 System

TECHNICAL FEATURES

1. Combination of display and sensor

Display and sensor can be mixed, if the digits of the type are matching, e.g.:
SOZ 960 B + SOG 960 or
SOZ 960 N + SOG 960

2. Operation of battery-powered type

Displays with batteries need no mains and are, therefore, especially suitable for adding to burners in the field. The lifetime of the battery is approximately 5 years. One year before the end-of-life, the crossed battery symbol appears on the display.

3. Operation of mains powered type

The display is connected to the mains (220 / 240 V AC) by means of a 2 wire plug and cable. The display disappears 2 days after loss of power. All data is retained and can be displayed when power is restored.
Set- and reset functions are not possible at mains interruption.

4. Mounting and installation

The sensor is connected by R 1/8" screw fittings into the oil tube between the oil pump and nozzle in the flow direction as stated on the sensor (any mounting attitude). The display can also be mounted in a panel with a 45 x 22.2 mm cut-out. The connection between the sensor and the display is made by a 2 wire cable and plug. For the power connector (mains version only), the appropriate standards must be complied with.

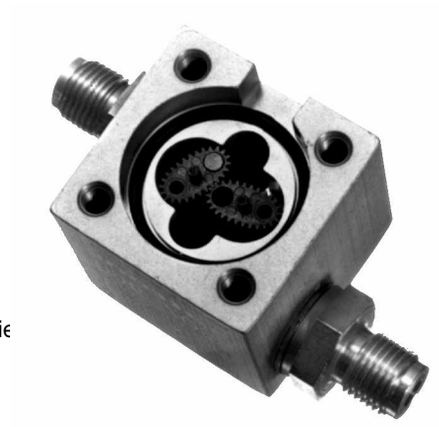

Inside vie

COMMISSIONING AND MAINTENANCE

1. Function of the push button mode

By pressing the push button, the various modes can be selected in succession. Each mode is displayed by its function symbol as well as the appropriate unit. The selected mode remains present until the push button is pressed again. The new function is first displayed when the push button is released. With the same push button, the reset signals for the sum-counter, total reset and threshold levels (for the service function) are generated.

Mode	Function	7-digit display	unit
	actual consumption	6-digits 2 decimal places (0000.00)	Oilflow in liter per hour (l/h)
2.	actual consumption 2nd stage	6-digits 2 decimal places (0000.00)	Oilflow in liter per hour (l/h)
◊	sum counter (resetable)	6-digits 0 decimal places (000000)	Oilflow in liter (l)
✳	totalizer	6-digits 0 decimal places (000000)	Oilflow in liter (l)
🕒	total hours of operation	6-digits 0 decimal places (000000)	hours of operation (h)
⎍	number of starts	6-digits 0 decimal places (000000)	number of starts
2.🕒	hours of operation, 2nd stage	6-digits 0 decimal places (000000)	hours of operation 2nd stage (h)
⎍ 2.	number of starts, 2nd stage	6-digits 0 decimal places (000000)	number of starts 2nd stage

	Function
⚠ Service	reduced flow rate
	battery life cycle < 1 year

2. Selection of the operating mode

2 operating modes can be selected by setting the code switches on the back.

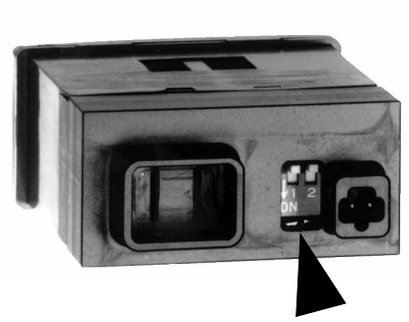

Code switch 1 to "off" (default, factory setting)

Single stage burner (also with soft start function)
The following functions will be displayed:

- actual consumption
- ◊ sum counter
- ✳ totalizer
- total hours of operation
- number of starts
- Service reduced flow rate
- battery life cycle < 1 year

Code switch 1 set to "ON"

Two-stage burner, for genuine 2 stage operation.
All possible functions will be displayed.

Code switch 2 has no function

3. Sum counter reset

In the mode ◊, function sum counter, resetting the sum counter can be done by this procedure:

-> *press the button for at least 10 secs.*

press the button, after 5 secs. the displayed value flashes for 5 secs. After this, the original value is displayed continously, now release the button, is now displayed.

4. Total reset

A total reset is possible, but should only be done with the agreement of the manufacturer

5. Service function

Besides displaying various data such as actual consumption, number of starts and hours of operation, it will also detect whether the oil troughput has fallen by more than 10% of the nominal value, due to either an obstruct in the nozzle or preheater failure; on condition the value of the throughput has been presetted previously at a correct operating burner (see item 6). If after the reset routine the throughput has fallen by more than 10%, the service symbol Service will appear.
By recognising and solving this problem, long term inefficiency and air pollution can be avoided.

6. Determing the momentary throughput

Determing the momentary throughput is done in the normal mode, function actual consumption:

-> *press the button for at least 30 secs., but not longer than 32 secs.*

press the button, after 25 secs. the displayed actual consumption flashes for 5 secs. After the display stopps flashing, release the button. As a confirmation, the service symbol Service and the actual consumption as the new defined preset value flash for 5 secs.

On 2-stage burners, preset levels for both stages can be stored. After a change of the heat rating (replaced nozzle, different pump pressure etc.), the preset value has to be newly determined as discribed above. The original value will be overwritten by the new value.

7. Deactivation of the service function

Same procedure as under item 6 but the button has to be pressed for more than 32 secs. By doing this, the preset value and the service symbol will be resetted:

-> *press the button for more than 32 secs.*

After releasing the button, as a confirmation the service symbol Service and the zero-value flash for 5 secs.

8. Maintenance, Filter

To avoid obstruction of the sensor, as a precaution a microfilter has to be installed upstream of the burner. Filter size: less than or equal to 150 µm.
To trap single floating particles, a rough filter is built into the sensor.

OVERALL DIMENSIONS SOZ

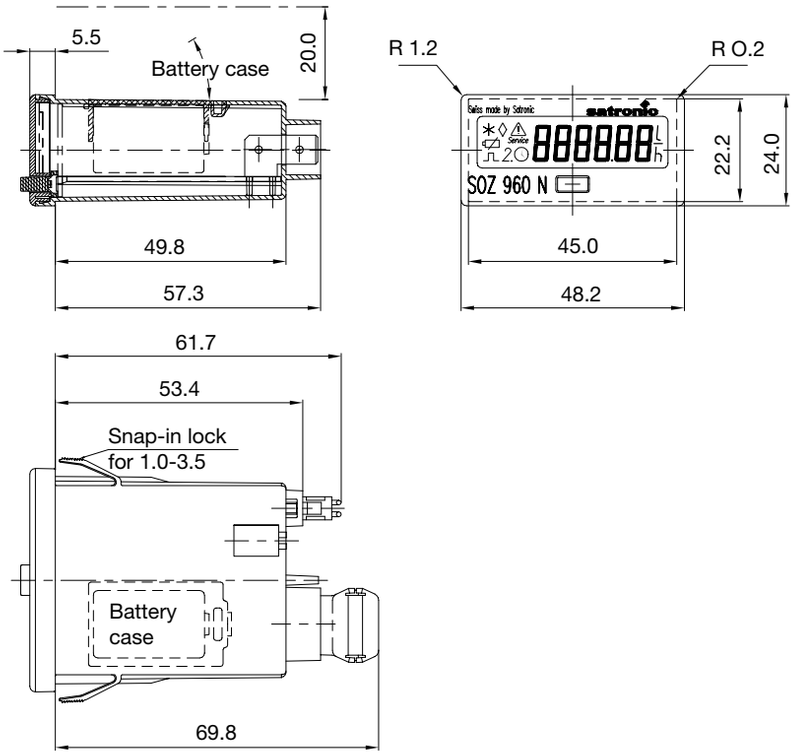

OVERALL DIMENSIONS SOG

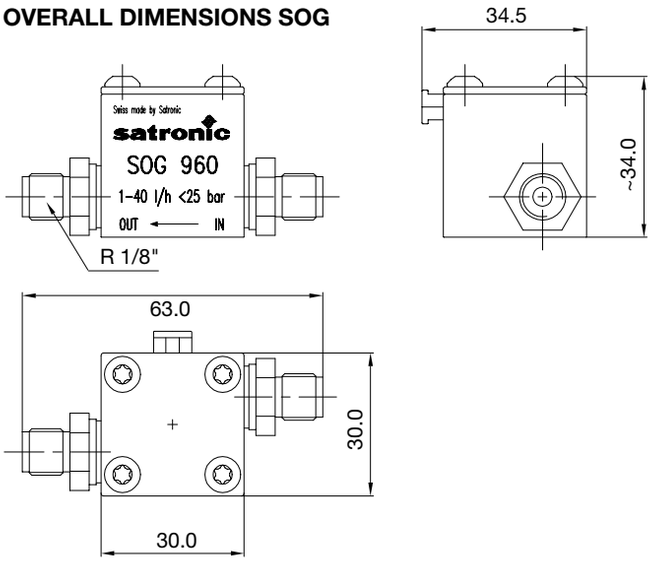

ORDERING INFORMATION

ITEM	DESIGNATION	ITEM NO.
sensor for heating oil EL	SOG 960	21010
display with battery	SOZ 960 B	21110
display for mains supply	SOZ 960 N	21120
power cable for display L 500 mm	power cable 2-wire 0.5 m	7295001
connection cable sensor/display L 900 mm	connection cable SOG/SOZ 0.9 m	72090

The above ordering information refers to the standard version.
Special versions are also included in our product range.

Specifications subject to change without notice.

Satronic AG
Brüelstrasse 7
Postfach 324
CH-8157 Dielsdorf

MDP 720-1

Leakage Monitor

Automatic leakage monitor with 2 series-connected gas valves. Suitable for testing with a vacuum or with two bypass valves.



BRIEF DESCRIPTION

The automatic leakage monitor MDP 720-1 automatically controls and monitors any leakage of two series-connected gas valves. This testing is performed directly after each normal shutdown. The same instrument allows testing for leakage by using a vacuum pump or two bypass valves. The operation itself can be monitored on the incorporated programme display. The bypass testing system at the reset display indicates which of the valves is leaking.

Terminals have been provided for: control circuit of the automatic firing assembly, pressure switch or vacuum switch, 2 bypass valves or vacuum pump, air damper (open, dead) blower motor of the burner, external lockout display and remote reset.
By connecting the MDP 720-1 with a Satronic automatic gas firing system of the TM series, a perfect performance of leakage control is checked intrinsically safely. If the MDP 720-1 for whatever reason does not perform a leakage test after a normal shut-down, the blower motor does not turn off. With the following normal start-up, the air proving switch in its operating position pervents the burner from starting.

The leakage test may be performed in either of 2 ways. In one case, 2 small bypass valves first drain the gas pressure of the 2 main valves and, after the testing period, bring it back up to the mains pressure. A gas pressure switch checks if, during test periods after "draining" or "filling", the pressure does not rise or drop. If it does, the MDP is subjected to a lockout. Normally, the control circuit is released for the next normal start-up after the testing operation.
In the second case, the vacuum pump creates a vacuum between the two gas valves. The vacuum thus created should be greater than 300 mm water head. Next, the vacuum switch during the testing period checks if the vacuum is maintained. If not, a lockout will be switched. The sensitivity of this set is easy to calculate. The following variables must be assumed known: Vp = gas volume between the two valves in liters, P = mains gas pressure or vacuum in mm water head. The response sensitivity in liters per hour then is:
Vp (1) x p (mm water head) x 0.003. The response level of the pressure or vacuum switch should be approx. half of the mains pressure, respectively at half the vacuum level.

The automatic system with the synchronous motor is incorporated into a plug-in type plastic housing. The top of the instrument holds the release button with a visual alarm display.
Plug-in boards with various cable ducts are provided on two sides of the wiring base. This makes for an easy access to an efficient wiring of terminals.

TECHNICAL DATA

Operating voltage	220 / 240 V (-15... +10%) 50 Hz (40 - 60 Hz)
Deviating frequency	results in proportional deviation of periods
Prefusing	10 A quick-action or 6 A slow-action
Internal consumption	15 VA
Max. load per output	4 A
total	6 A
Approved by	DVGW
Testing periods	approx. 50 sec. each
Filling and draining periods	approx. 6.5 sec. each
Operating period of the vacuum pump	approx. 50 sec.
Pressure or vacuum switch contact:	1 changeover contact 100 mA 220 V~
Ambient temperature	-20° C to +60° C
Weight	approx. 750 g
Type of protection	IP 41

Important
For installations in the Nederlands, the type MDP 720-1 Mod. NL has to be used (cycle time 60 sec. instead of 120 secs,)

LEAKAGE TEST WITH BYPASS VALVES

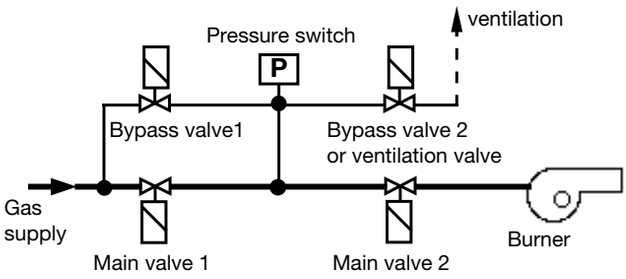

LEAKAGE TEST WITH VACUUM PUMP

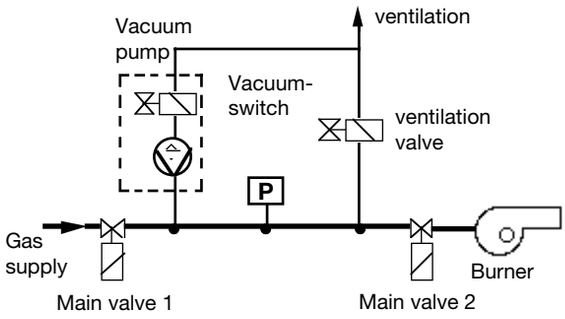

PLEASE NOTE

Check the wiring before starting the system. Faulty wiring may result in damages to the monitor system and endanger the safety of the system.

The instrument may be plugged in or unplugged only when the main switch is set on **OFF**. The trigger point of the pressure switch in the bypass system, or the vacuum switch in the vacuum system, must be set for half of the mains pressure, respectively the vacuum level.

FUNCTION CHECK

Perform the following checks when starting or auditing the system:

Bypass system

Testing operation with bypass valve 1 (BV 1), disconnected from terminal 5:
After the testing period V2, the instrument switches to lockout (end of yellow area). Testing operation with bypass valves (BV 1, Term. 6, BV 2, Term. 5) connected transposed:

After the testing period V1, instrument switches to lockout (end of yellow area).

Vacuum system

Testing operation with vacuum pump disconnected from terminal 3. After the testing period, instrument switches to lockout (end of yellow area).

SAFETY AND SWITCH FUNCTIONS

If the pressure or the vacuum switch contact is stuck, a lockout will be the result in any case. In both systems, leakage of the auxiliary valves is also checked. A burner start-up without a preceding leakage test concluded positively is impossible. The blower motor of the burner is switched from the MDP. If for any reason the leakage programme does not start-up in a normal shut-down, the blower motor does not turn off. For the next normal switch-on, there is no burner start-up since the air proving switch contact remains in its operating position.

FAULT FINDING

Testing programme does not operate, programme remains in the white area:
-> No phase on terminal 9, automatic burner assembly on lockout.

Programme sequence stops in the black area:
-> Connection terminal 17 to terminal 18 (bypass) or terminal 18 to terminal 19 (vacuum) is missing.

Blower motor does not start:
-> No feedback from the automatic burner assembly on terminal 4.

Blower motor does not turn off:
-> Permanent phase on terminal 4, programme switching system defective.

CONNECTION DIAGRAMM AND PROGRAMM SEQUENCE

Automatic Burner Type TMG

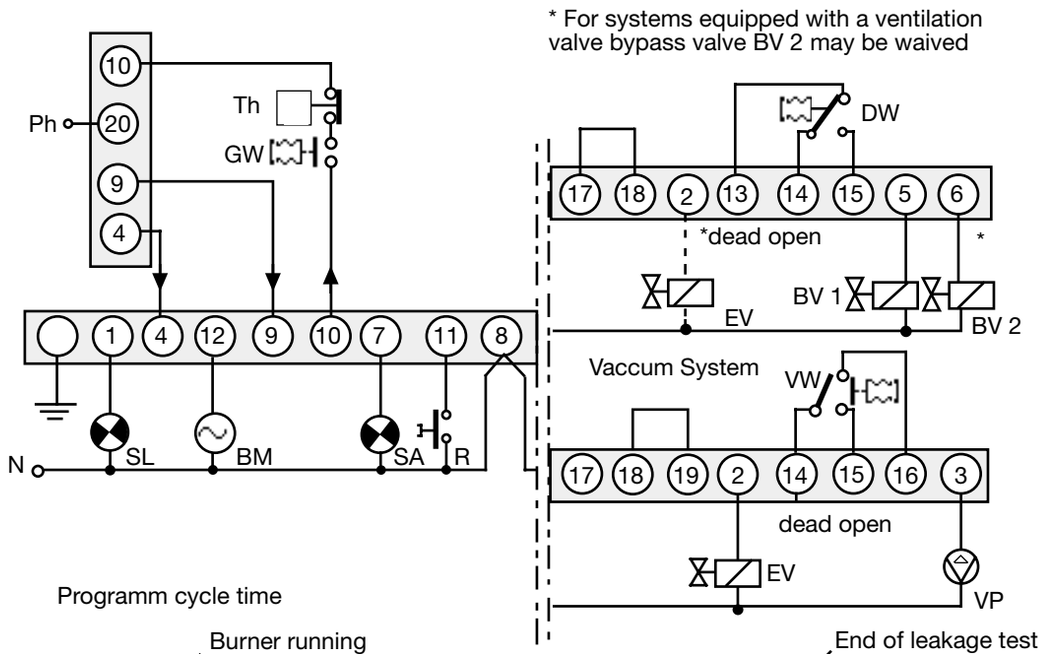

Programm cycle time

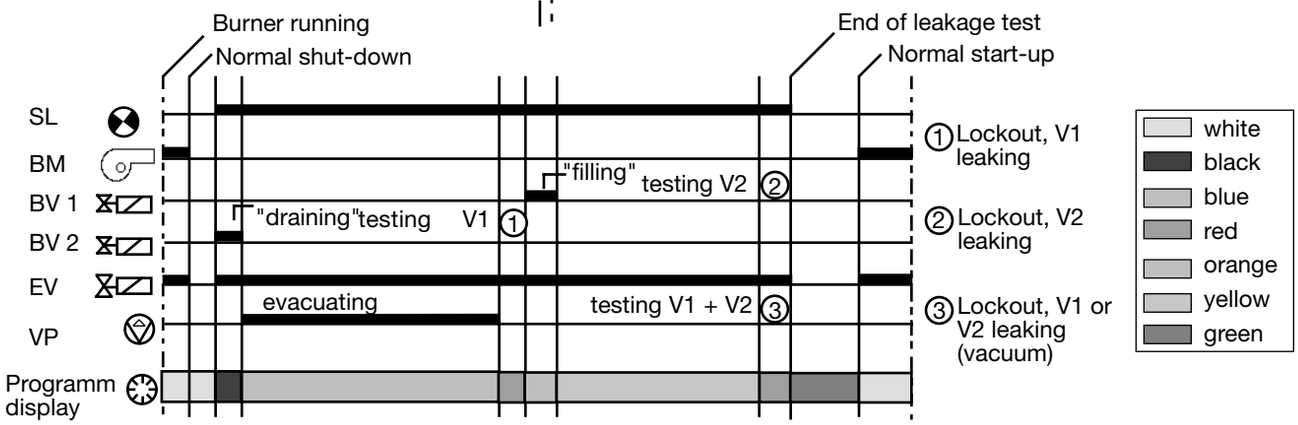

SL	signal lamp, leakage test	R	Reset button, external	BV1	Bypass valve 1
BM	Blower motor, burner	DW	Pressure switch	BV2	Bypass valve 2
SA	External lockout signal	EV	Ventilation valve, dead open	VW	Vacuum switch
				VP	Vacuum pump

MDP 720-1 WITH BASE

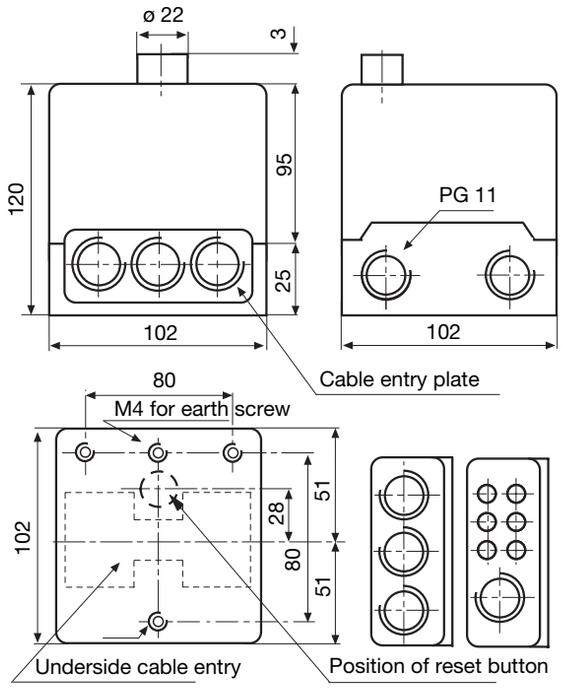

ORDERING INFORMATION

ITEM	DESIGNATION	ITEM NO.
leakage test device	MDP 720-1	08905
leakage test device	MDP 720-1 NL	08906
Base	Base MDP	70215
cable entry plate	cable plate	70501
alternative	PG-plate	70502

The above ordering information refers to the standard version.
Special versions are also included in our product range.

Specifications subject to change without notice.

MDP 720-1

satronic
A Honeywell Company

Satronic AG
Brüelstrasse 7
Postfach 324
CH-8157 Dielsdorf

UPR 770

Regulator

Regulator for modulating burners allowing exact regulation of pressure or temperature



INTRODUCTION

The UPR 770 is a fully electronic regulator with no mechanical movement, which operates with "P" characteristics (proportional). It is designed to accurately regulate temperature or pressure in heating, ventilation or air-conditioning systems, and is particularly suitable for maintaining a constant pressure or temperature inside a heating system boiler while the output of the modulating burner is varied. Deviations from the nominal value are evaluated by an integrated circuit differential amplifier. As well as greatly amplifying the signal which indicates a deviation, the amplifier remains extremely stable, being insensitive to zero point drift, ambient temperature variations and fluctuations in the mains voltage. Output from the regulator is via two contacts which demand "more" or "less" power from the system it is regulating.

Three potentiometers for initial adjustment of the regulator are positioned on the front plate together with the "+" and "-" indicator lamps. The main regulating potentiometer (for setting the desired pressure or temperature value) has an easily-read scale, and can be locked at the required setting. This potentiometer is of the plug-in type, making it very easy and convenient to keep a range of potentiometers with the required values available, and also providing the possibility of connecting an external (remote) main potentiometer. When the regulator is operated together with the FED 621 photo-electric pressure sensor, the jumper wire on the underside of the unit must be cut.
Terminals are provided for the following:
- Resistance thermometer Pt 100 Ω / 0° C
- Main potentiometer for setting the required value according to the standard measurement range or a special range as specified by the customer
- Feedback potentiometer 100 E
- FED 621 photo-electric pressure sensor
- Regulating device (2 switching contacts which carry no other voltage)

CONSTRUCTIONAL FEATURES

The regulator is enclosed in a plug-in type plastic housing. All operating controls and the central fastening screw are situated on the front of the housing.

The wiring base is equipped with additional live, neutral and earth terminals which, together with the various cable entry points, ensure easy-to-follow and efficient wiring of the unit.

TECHNICAL DATA

Supply voltage	220 / 240 V (-15... +10%) 50 Hz (40 - 60 Hz)
Fuse rating	max. 10 A rapid
Power consumption	approx. 10 VA
Max. current rating	4 A per terminal 6 A total
Permissible ambient temperature	-5° C to +60° C
Pressure or temperature sensor	Pt 100 resistance thermometer or FED pressure sensor
Feedback	100 W potentiometer on regulating device
Feedback signal strength Xp	0 to ±5 % of the regulating range
Sensitivity E	adjustable up to ±0.2 % of the final value
Zero-point adjustment Xo	adjustable up to ±25° C for a desired value of 100° C
Standard measurement ranges	50 - 180° C and 140 - 360° C 1, 4, 16 and 25 bar, depending on type of FED
Length of cable to sensor and remote potentiometer	max. 200 m, 1.5 mm^2 (without screening)
Mounting attitude	any
Weight including base	approx. 900 g

ADJUSTING THE REGULATOR

Initial adjustment of the potentiometers

Set sensitivity "E" to maximum (position 10), "Xo" and P-range "Xp" to 0. The potentiometer for setting the desired value, or respectively, the FED nominal value, should be adjusted to the minimum position.

Switching on

After switching on the mains voltage, the "+" relay closes its contacts, which is indicated by the red lamp. The regulating device moves towards "higher output". When the system which is being regulated reaches the value set on the main potentiometer or, respectively, on the FED, the "+" relay opens, followed shortly afterwards by the "-" relay, which then closes its contacts. This is indicated by the green lamp. The regulating device then moves towards "lower output".

Adjustment of the P-range "Xp"

The higher the "Xp" value, the greater the stability of regulation. Rapid changes in the actual or desired value are, however, corrected all the more slowly.

- After the desired value has been reached, the "Xp" potentiometer should be set to maximum (22).
- The behaviour of the regulating device or, respectively, the "+" and "-" indicators, should be observed. Corrections must be seen to take place step by step. If the regulating device alternates continuously between maximum and minimum, the connections on the feedback potentiometer should be reversed. (Reverse terminals 14 and 16)
- At intervals of approx. 5 min., reduce the "Xp" setting by one increment (e.g. from 22 to 21). With each adjustment, the regulating action becomes increasingly restless, until the regulating device begins to alternate continuously between the upper and lower limits.
- On reaching this limit of regulation stability, the "Xp" value should be set 2 – 3 increments higher.
  When these adjustments are being carried out, the desired value set on main potentiometer should not, as far as possible, be altered, even when considerable deviations from the desired value are observed.

Sensitivity adjustment "E"

In order to achieve greater regulation accuracy, sensitivity "E" should be adjusted to suit the characteristics of the system.
If it is required that even a very minor change in the actual value should be corrected by the regulating device, "E" should then be set as high as possible (towards 10).
Should the regulating device then begin to alternate continuously, sensitivity must be reduced by 1 - 2 increments.

Greatest possible regulating accuracy will be achieved when:
- P-range "Xp" is set as low as possible
- Sensitivity "E" is set as high as possible

Adjustment of the zero point "Xo"

This adjustment allows the desired-value potentiometer to be calibrated to match the temperature being regulated. Deviations are caused by the resistance of the cabling to the temperature sensor.
When an FED pressure sensor is used, zero-point adjustment has no effect.

- The deviation from the desired value can be calculated by making use of a thermometer, pressure gauge or other measuring instrument which is temporarily fitted.
- The error can be corrected by adjusting "Xo", step-by-step, in the opposite direction to the deviation.

The adjustment of a regulator unit requires some patience, regardless of the make or model being used. It is pointless to constantly change the settings on the potentiometers. The regulating system should be allowed to operate for some time without further interference, but should be kept under observation during this period. Successful adjustment will be accomplished in a short time if our instructions are adhered to

FAULT FINDING

In case of faulty operation, first check the following:
- Mains voltage 220 V, 50 Hz
- Tightness of terminals in the base, sensor, feedback and main potentiometers
- Wiring according to the wiring diagram
- Jumper wires in the base
- Feedback potentiometer

Contacts of "+" or "-" relays remain closed

This can be caused by a break in the circuit or a short circuit in the cabling, at the resistance thermometer or at the remote main potentiometer.
Check using an ohmmeter (at room temperature).
- Between terminals 17 and 18: approx. 110 W
- Between terminals 12 and 13: the reading should be approx. 0.4 x temperature set

Relays do not close, unit is extremely insensitive

Sensitivity set to minimum, jumper wires connected incorrectly or the unit is defective.
By employing the Satronic TM test base, all terminals can be tapped while the unit is in operation, using 4 mm banana-type plugs. The TM test base consists of a base unit and plug-in part, which are connected together by a multiple-core cable with a length of approx. 1.5 metres.

PT 100 temperature Sensor

The PT 100 consists of a platinum measuring resistor encapsulated in a glass or steatite body. Its resistance values and tolerances are standardised in accordance with DIN 43760. The particular advantages of this measuring resistor are the reproducible temperature/resistance curve which remains stable over a period of many years, and its high accuracy.
There are a variety of versions available on the market. Satronic would be pleased, at any time, to suggest a version suitable for your requirements.

Photo-Electric pressure Sensor FED 621



INTRODUCTION

The photo-electric pressure sensor converts a varying pressure value into a reproducible, varying electrical resistance value. It is used to sense and transmit a pressure value to the UPR 770 regulator.
Depending on the pressure value detected by the sensor, a shielding vane allows more or less light to reach the photo resistors. The light source is provided by two built-in electric lamps (1 lamp is a back-up) which are powered directly by the measuring bridge voltage.

When setting the desired value, the photo resistors are moved in relation to the shielding vane and the light source.

TECHNICAL DATA

For connection to	UPR 770 Regulator
Sensitivity	±0.2 % of final value
P-range	±6 % of final value
Adjustment range	20 - 100% of manometer final value
Permissible ambient temperature	0 - 50° C
Lamp type	E10 / 8041 D (Phillips)
Standard versions	FED 621-1 1 bar FED 621-4 4 bar FED 621-16 16 bar FED 621-25 25 bar Other pressure ranges available on request

INSTALLATION

The pressure sensor should be mounted vertically, in a position where it is subjected to as little vibration as possible.
Direct sunlight should be avoided.
To reduce the vibration transmitted to the pressure sensor during operation, a vibration absorbing device (spiral) should be fitted in the connecting pressure line.
An operating temperature of 50°C must not be exceeded.
The sensor should therefore not be mounted directly on the heating system boiler.

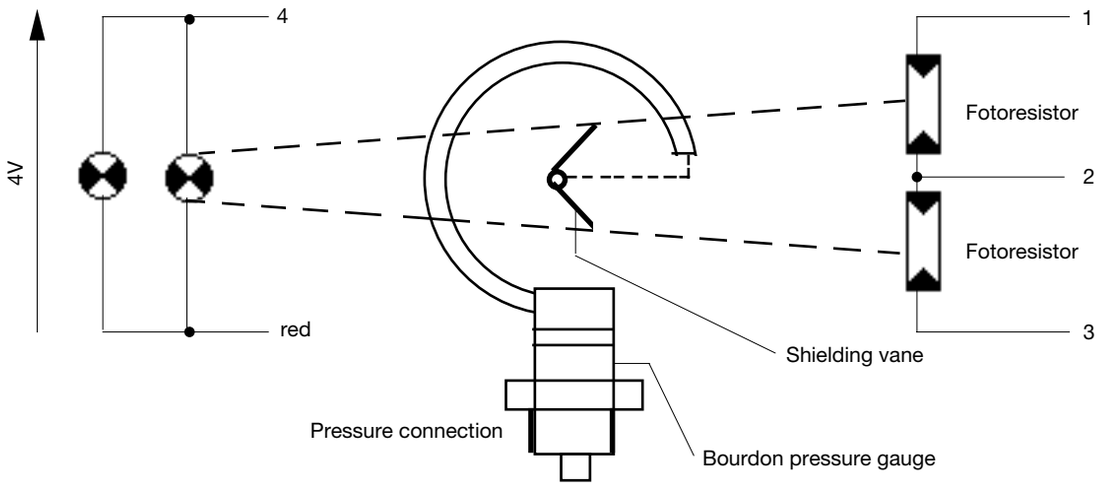

REMOTE PRESSURE SENSOR

In the case of the remote pressure sensor, pressure variations are transferred to a mechanically coupled potentiometer. Rotation of the pointer spindle causes the potentiometer slider to move, resulting in a variation in the resistance. The UPR 770 compares this value with the value set on the main potentiometer. The main potentiometer and the mechanically coupled potentiometer both have the same inherent resistance.
When use is made of a remote pressure sensor, a 100 W, 0.5 W, 1% resistor should be wired in series with the potentiometer slider contact. The jumper wire in the UPR 770 base should not be cut.

TECHNICAL DATA

Resistance range	100 W to 5 kW
Rating	≥ 100 mW

WIRING DIAGRAMS

Feedback potentiometer: Resistance 14… 15 decreases when regulating device (actuator) runs to end position.

Wiring diagram for temperature regulation using PT 100

Jumper wires in the base should not be cut.

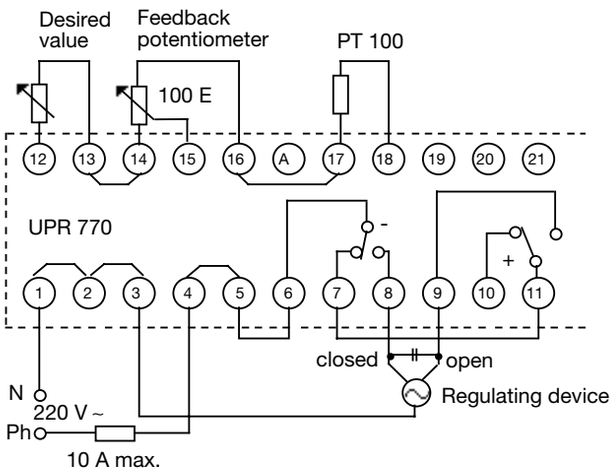

Wiring diagram for pressure regulation using the FED 621

Jumper wire in base cut.

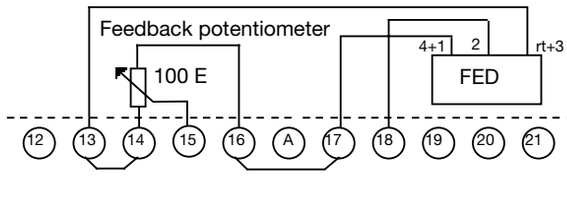

Wiring diagram for regulation using remote pressure sensor

Jumper wire in base not cut.

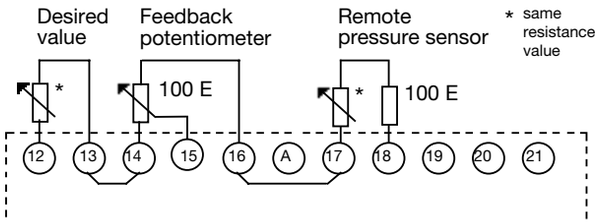

Caution:

All wiring should be checked before operating the system for the first time. Incorrect wiring could damage the regulator. Switch off or disconnect the power before plugging the unit into or removing it from its base.

UPR 770 WITH BASE

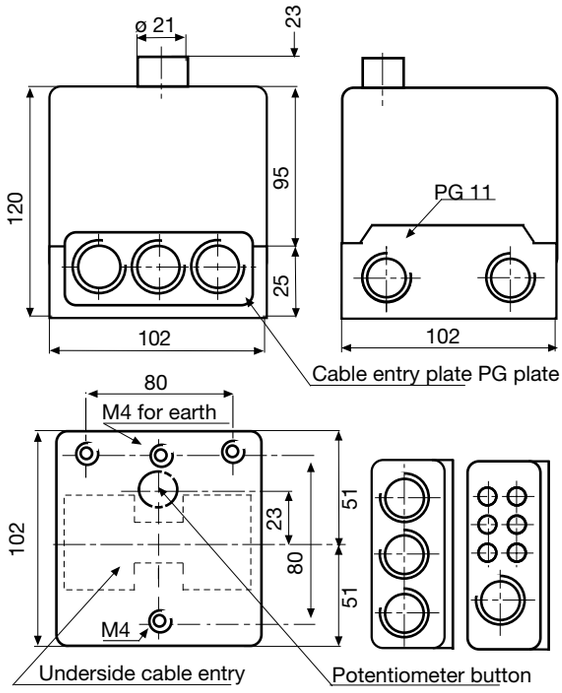

DESIRED-VALUE POTENTIOMETER

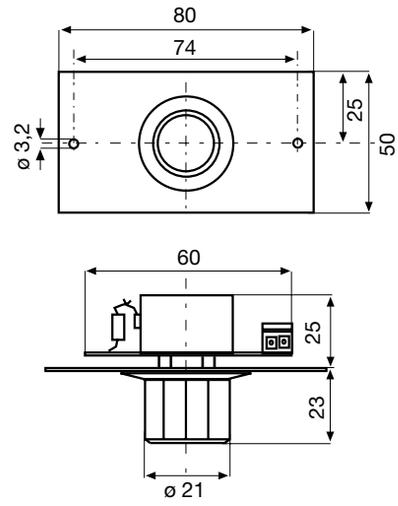

ORDERING INFORMATION

ITEM	DESIGNATION	ITEM NO.	ITEM	DESIGNATION	ITEM NO.
Regulator	UPR 770 regulator	18802	Pressure sensor	FED 621 1 bar	18223
Base	UPR 770 base	18132	optionally	FED 621 4 bar	18224
Insert plate	PG plate	70502	optionally	FED 621 16 bar	18226
optionally	Cable entry plate	70501	optionally	FED 621 25 bar	18227
Desired-value	SWP 770 50 - 180° C	18733			
potentiometer	SWP 770 140 - 360° C	18734			
optionally	SWP 770 0 - 100%	18735			

The above ordering information refers to the standard version.
Special versions are also included in our product range.

Specifications subject to change without notice.

Satronic AG
Brüelstrasse 7
Postfach 324
CH-8157 Dielsdorf

Flame relay

**For semi automatic
oil- and gas power burners**

Possible flame detectors:
- Ionisation probe
- UV-cell
- Infrared flicker detector



INTRODUCTION

The flame relay FFW 930 controls and monitors semi automatic oil- and power gas burners. It is also used together with an oil- or power gas burner control box for special, fully automatic control- and monitor functions.

CONSTRUCTIONAL FEATURES

The flame amplifier circuit and a relay with 4 change-over contacts are housed and protected in a non-inflammable, non-transparent, plug-in type plastic case. A flame indicator bulb and the central locking screw are placed on top of the housing.
The wiring base is equipped with additional loop terminals and – together with the various possibilities for cable entry – enables an universal wiring.

FUNCTION

Depending on the wiring, a semi or fully (only together with a burner control box) automatic control of a burner is possible.
As soon as a flame signal is detected, the built-in relay switches on, the relay contacts change over and activate the various burner components. Simultaniously, the flame indicator bulb on the top of the unit switches on.

TECHNICAL DATA

Supply voltage	220 / 240 V (-15... +10%) 50 Hz (40 - 60 Hz)
Fuse rating	max. 10 A rapid, 6 A slow
Power consumption	5 VA
Max. current per output	4 A
Total	6 A
Amplifier sensitivity	1 µA
Min. current from UV tube or ionisation probe	5 µA
Flame detector cable	max. 20 m cable length
Flame detector	
- Ionisation probe	
- UV tube type	UVZ 780 red
- Infra-red flicker detector	IRD 1020
Weight incl. base	200 g
Mounting attitude	any
Permissable ambient temp.	-0°… +60° C

APPLICATION TECHNOLOGY FEATURES

1. Flame detection

The following types of flame detector can be employed:
- Ionisation electrode, where the mains supply provides a neutral earth connection. Suitable for gas burners (signal current from flame cannot be influenced by interference from ignition spark).
- UV sensor type UVZ 780 red, suitable for gas and combi burners.
- Infra-red flicker detector type IRD 1020 for all types of burner.

2. Safety

The design/cobstruction of the flame relay FFW 930 conforms to the present applicable European standards and regulations.
By use of a UV-cell or IRD flame detector, the flame sensor needs to be checked prior opening of the valves for their correct function (visually/manually or with a suitable wiring of the burner components.

3. Mounting and Electrical Installation

At the base:
- 3 earth terminals, with an additional tag for the burner earth.
- 3 neutral terminals, with a fixed internal through connection to the neutral input, terminal 8.
- 2 separate slide-in plates and 2 fixed, threaded knock-outs (PG 11 thread) as well as 2 knock-outs underneath, facilitate wiring of the base.

General:
- Can be mounted in any position, insulated as per IP 44 standard (unaffected by water spray). The control box and detector probes should however not be subjected to excessive vibration.
- The applicable installation regulations must be observed during installation.

SCHEMATIC CONNECTION DIAGRAM

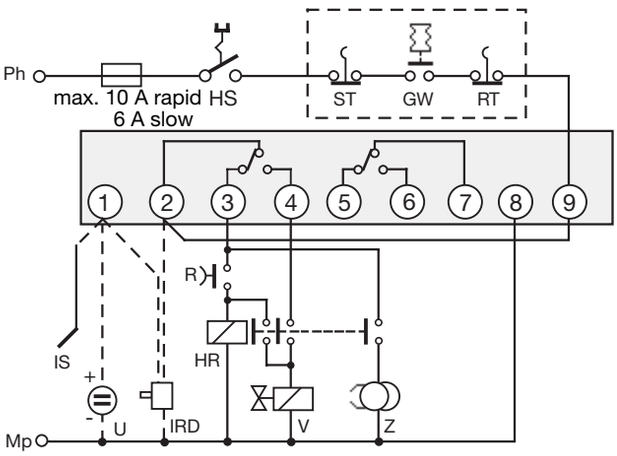

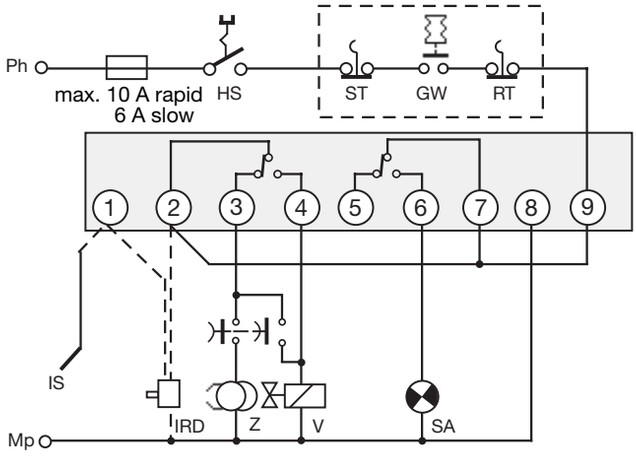

IRD CONNECTION

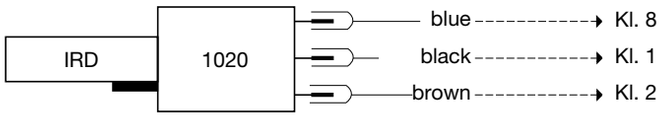

HS	Mains switch	V	Ventil
ST	Limit thermostat	Z	Ignition
GW	Gas pressure switch	SA	External fault indication
RT	Control thermostat	HR	Auxilliary relay
IS	Ionisation probe	R	Temporary switch for start
U	UVZ 780 red		
IRD	IRD 1020 or IRD 820		

FFW 930 AND SOCKET

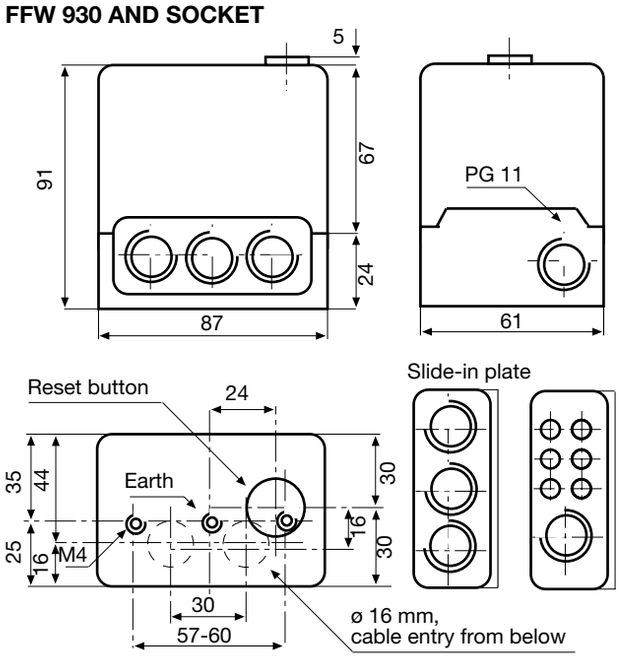

CHECKING THE FLAMESIGNAL

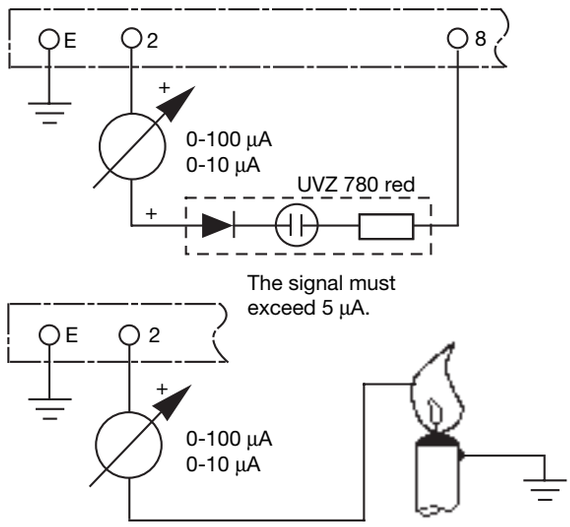

ORDERING INFORMATION

ITEM	DESIGNATION	ITEM NO.
Flame relay	Flame relay FFW 930	06903
Socket	Wiring base 701 ABEN	70001
Slide-in-plate	PG-plate	70502
or	Cable terminal plate	70501

The above ordering information refers to the standard version.
Special versions are also included in our product range.

Specifications subject to change without notice.

Satronic AG
Brüelstrasse 7
Postfach 324
CH-8157 Dielsdorf

Remote- Multiple reset device

Remote burner resetting for Satronic automatic burner controls for retro-fitting



INTRODUCTION

Quite often heating installations are located in inaccessible or poorly accessible places. If the burner develops a malfunction, then it is very difficult to reset it.
The solution: Remote resetting by means of FR 870 or MR 880
The remote reset device FR 870 or multiple reset device MR 880 can be retro-fitted to the following Satronic automatic burner controls:

Automatic oil burner controls	Series TF 800 TTO 872 TTO 876 Series MMD
Automatic gas burner controls	Series TFI 800 Series MMI and MMG (as from manufacturing no. 704...)

The housing of the remote reset device is mounted on the automatic control like the pushbutton extension at the reset pushbutton, and the connection cable is connected according to the corresponding instructions.

TYPES AVAILABLE

FR 870	Remote resetting of one burner with a Satronic automatic burner control.
MR 880	Remote resetting of several burners with Satronic automatic burner controls from one and the same remote reset pushbutton. When the reset pushbutton is actuated, only the burners manifesting a malfunction are reset, those burenrs working normally continue to operate without any interruption during this process.

CONSTRUCTIONAL FEATURES

Built into a plastic housing is a lifting solenoid which is operated by direct current.
The current rectifying and a thermal overload protection are located on a printed circuit board and also accomodated in the housing.
The connection to the mains power supply is through a 20 cm long, 3-core cable which is tension-relieved.

TECHNICAL DATA

Operating voltage	220 / 240 V (-15... +10%) 50 Hz (40 - 60 Hz)
Current demand	Maximum 300 mA
Waiting time between two actuations	approx. 10 sec
Weight	60 g
Mounting position	As required

The remote reset pushbutton (R) must be installed in such a manner, that the corresponding burner can be seen from the actuating position.

DIMENSIONAL DRAWING

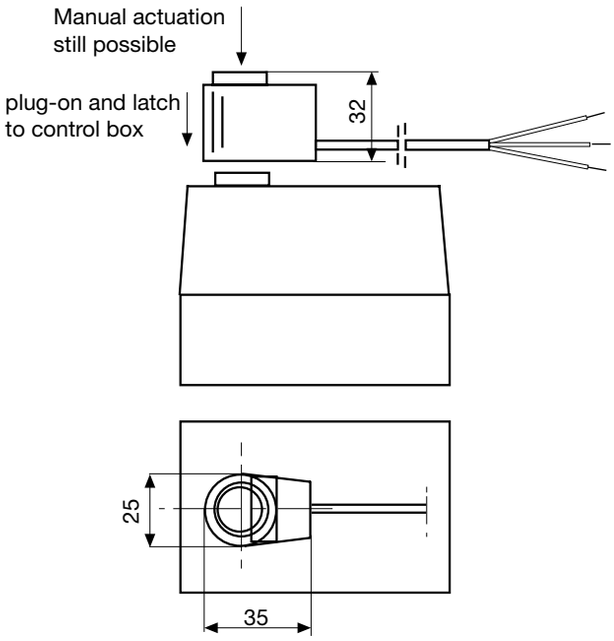

CONNECTION DIAGRAM FR 870

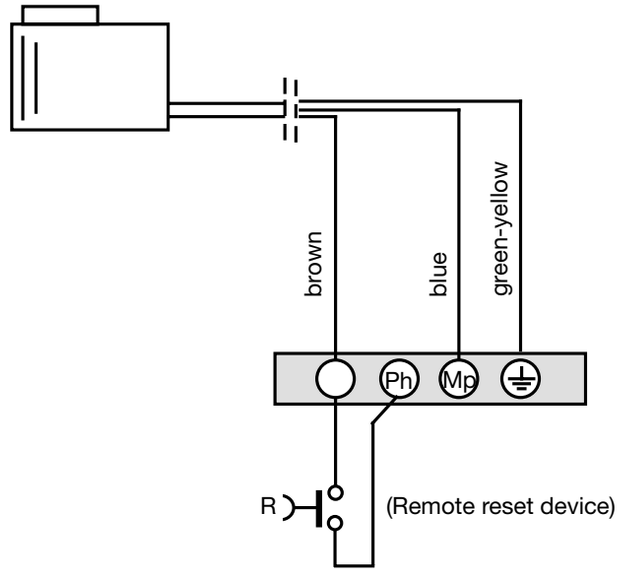

SCHEMATIC DIAGRAM MR 880

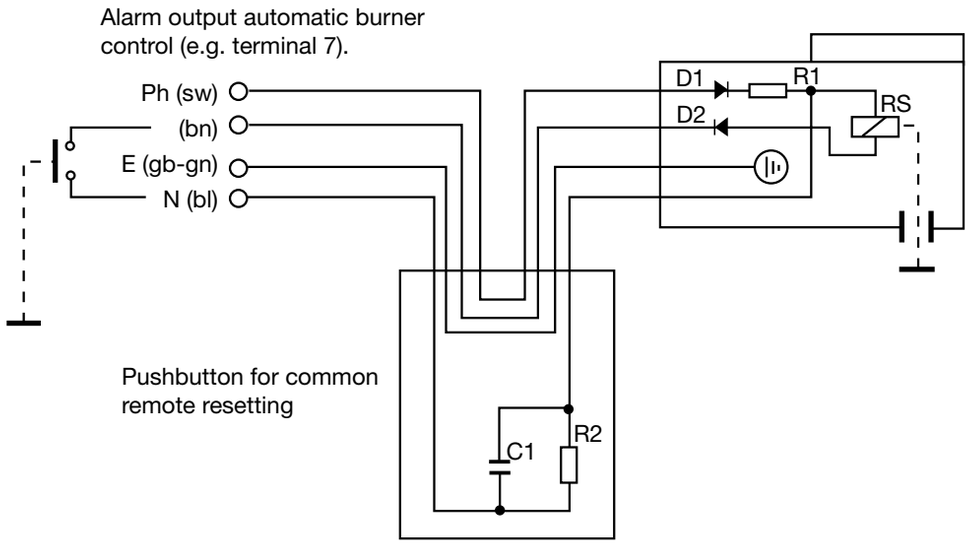

ORDERING INFORMATION

ITEM	DESIGNATION	ITEM NO.
Remote reset device	FR 870	70700
Multiple remote reset device	MR 880	70710

The above ordering information refers to the standard version.
Spezial versions are also included in our product range.

Specifications subject to change without notice.

FR 870 / MR 880

satronic
A Honeywell Company

Satronic AG
Brüelstrasse 7
Postfach 324
CH-8157 Dielsdorf

SFA 970

Patent pending

Filter shut off valve for oil burner nozzles

For oil burners
with an oil flow up to approximately 10 kg/h.

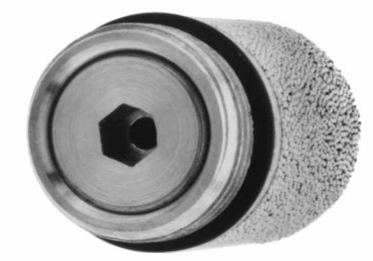

INTRODUCTION

The Satronic filter shut off valve effectively prevents the oil nozzle from dripping when the burner switches off. The start characteristics of the burner therefore will be considerably improved. The unburned hydrocarbons are significant below the limiting values which are stated in the EN 267. The nozzle shut off valve SFA 970 is available in different types and can be used with most of the existing types of oil nozzles.

CONSTRUCTIONAL FEATURES

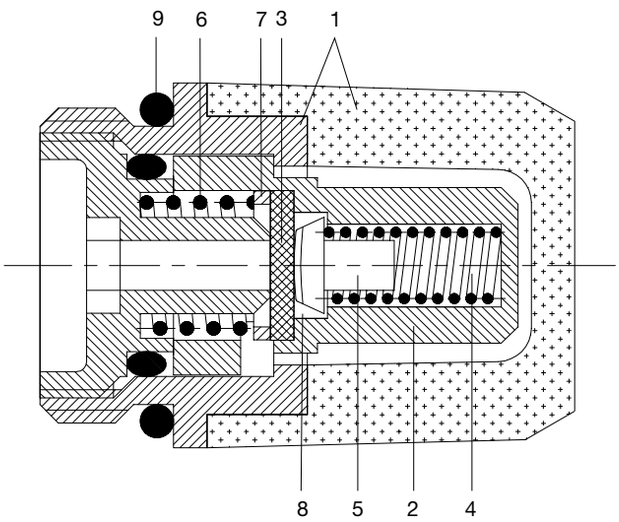

The filter shut off valve consists of rotation symmetrical components which are concentrically placed to the valve axis. The closed sinter filter with a brass thread (1) contains the valve housing with the valve seat (2) as well as the shut off component, the diaphragm (3).
Contained in the valve housing is the push spring (4) which presses the diaphragm through a push bolt (5) tight to the valve seat. The push spring (6) with a between ring (7) counterholds the diaphragm to ensure a smooth surface pressure against the diaphragm seat. Consequently a 100% sealing against the spring room (8) is guaranteed.
The O-Ring (9) prevents, that oil can flow through the connection between the nozzle and SFA 970 outside the shut off device.

TECNICAL DATA

Opening pressure	8 bar
Closing pressure	5 bar
Sinter filter grain 2	until 1 USG/h
Sinter filter grain 3	1-2.5 USG/h

DESCRIPTION OF OPERATION

The shut off device of the filter shut off valve is designed as a diaphragm. In order that it can lift from the valve seat against the power of the first spring, a determined over pressure, the opening pressure, must be established inside the inlet room. Until this opening, the pressure only acts at the outer part of the diaphragm. Up on reaching the necessary opening pressure, the diaphragm lifts from the valve seat. The oil flows in the outlet channel and gets into the nozzle.

After the valve opened, the oil pressure acts at the complete diaphragm surface. Consequently a lower over pressure is necessary to keep the valve open. The result ist an optimally atomized oil spray through the nozzle as soon as the valve opened.
If the oil pressure decreases below a defined pressure, the closing pressure, then the power of the push spring will be sufficient to close the valve through the push bolt and the diaphragm. The pressure loss of the filter shut off valve is almost negligible. Therefore it is not necessary to adapt the pump pressure.

APPLICATIONS ENGINEERING FEATURES

The Satronic filter shut off valve is available in different types to be used with the nozzles from Steinen, Danfoss, Fluidics, Delavan and Monarch. The existing sinter filter, which is screwed with the nozzle, simply need to be removed and be replaced with the filter shut off valve SFA 970. Which should be screwed with the nozzle by hand.

SCALE DRAWING SFA 970

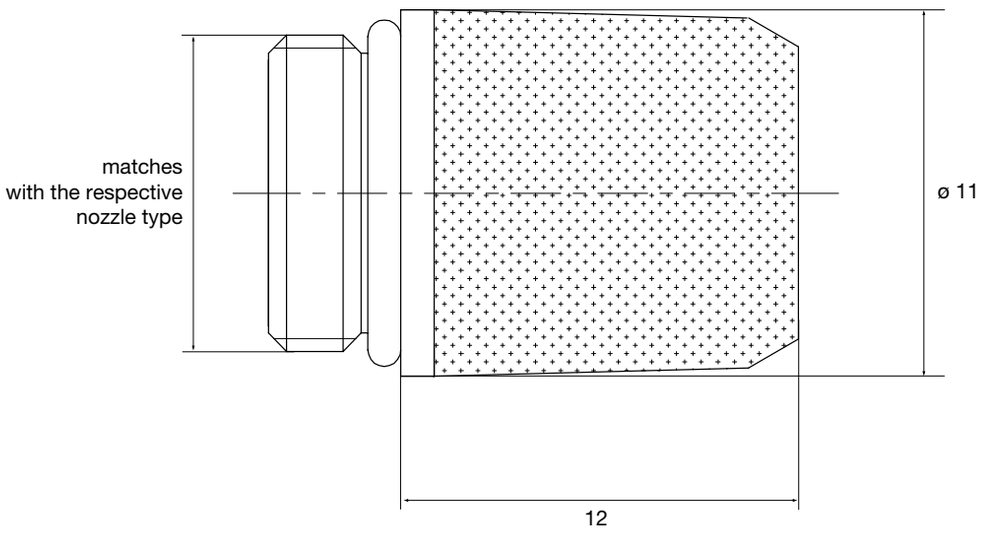

ORDERING INFORMATION

ITEM	DESIGNATION	ITEM NO.
Filter shut of valve for Delavan, Monarch	SFA 970 Grain 2	24100
Filter shut of valve for Delavan, Monarch	SFA 970 Grain 3	24101
Filter shut of valve for Steinen, Danfoss, Fluidics	SFA 970 Grain 2	24110
Filter shut of valve for Steinen, Danfoss, Fluidics	SFA 970 Grain 3	24111
Filter shut of valve for Danfoss	SFA 970 Grain 2	24120
Filter shut of valve for Danfoss	SFA 970 Grain 3	24121

The above ordering information refers to the standard version.
Special versions are also included in our product range.

Specifications subject to change without notice.

Satronic AG
Brüelstrasse 7
Postfach 324
CH-8157 Dielsdorf

Oil preheater electronically controlled

For oil burners with a throughput capacity up to 6 kg/h
Precise control of the oil output temperature
Electronic control intergrated in the preheater

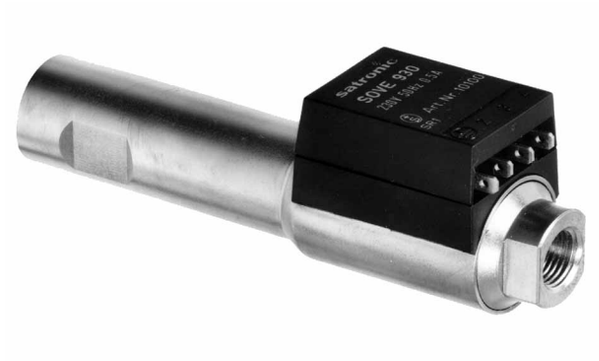

INTRODUCTION

On the electronically controlled oil preheater type SOVE 930, the oil output temperature is maintained at a constant level, independant of the oil input temperature, viscosity and supply voltage variations.
The fuel oil is preheated immediately before it enters the burner nozzle. This achieves a virtually constant viscosity for atomisation and leads to reliable ignition and good combustion.

CONSTRUCTIONAL FEATURES

The basic component is a tube containing a sintered body, which by its nature has a very large surface area for transmitting the temperature to the oil. The heating power, per unit of surface area is correspondingly low, which prevents coking.

A heating element of 120 watts is wound round the tube and is protected by a solid brass jacket, secured against rotation. The oil is supplied through a central connection.
Apart from the release thermostat, the heating element and the temperature sensor, all electrical and electronic components for the temperature control are located on a printed circuit board. It is mounted in a plastic housing together with the release thermostat, which is thermally connected to the shaft, and is protected against shock damage and the ingress of dirt.
Supply cable and preheater can be seperated by a plug connector. This permits easy installation and removal.

TECHNICAL DATA

Operating voltage	220 / 240 V (-15... +10%) 50 Hz (40 - 60 Hz)
Release contact switching current	4 A permanent current (cos φ 0.6)
Heating power	max. 120 W
Oil flow throughput	up to approx. 6 kg/h
Permissible pressure	max. 25 bar
Oil volume	2 cm3
Oil temperature in the nozzle when released	45° C
Control temperature	max. 65° C
Control amplitude	less than 0.5° C
Switch gap of the release thermostat	14° C
Preheat time at 15° C input temperature	approx. 20 sec
Weight	106 g
Wrench size - jacket - oil inlet part	 SW 16 SW 13

APPLICATIONS ENGINEERING FEATURES

The preheater type SOVE 930 can be connected to any automatic oil burner safety control box.
A unit with a thermostat loop and/or overriding contact (interceptor circuit) is not necessary.
The controlled temperature is held constant, indepentant from oil inlet temperature, flow capacity and mains voltage. 120 watts heating power enables the SOVE 930 to be used universally with burners having an oil throughput of up to 6 kg/h. The heat exchanger, with its large surface area, and the electronic control circuit prevent the oil from coking at very small throughputs and under burner fault conditions.
The thermostat contact releases the burner to start. This contact breaks if the temperature drops below 40° C.
In case of an interruption of the oil supply – a so called zero throughput – the temperature for the heating element is limited to 80° C.
The central oil connection, the simple cylindrical shape of the preheater and the plug connector enable this unit to be fitted to any burner assembly. The print-connector is compatible with all available preheater-plugs.
The preheater is also available in an uncontrolled version, called **SOVU 930.**

DESCRIPTION OF OPERATION

A specially designed electronic circuit controls the temperature of the preheater type SOVE 930. A PTC-element acts as a sensor. The heating element is switched on and off by an electronic switch.
At the start, the oil is heated up to the release temperature with a heating power of 120 watts. The contact of the release thermostat is then closed and the burner is able to start. After this the oil output temperature is controlled at a constant level. The electronic circuit also makes sure that this operating temperature does not drop.

CONTROL CIRCUIT OF THE SOVE 930

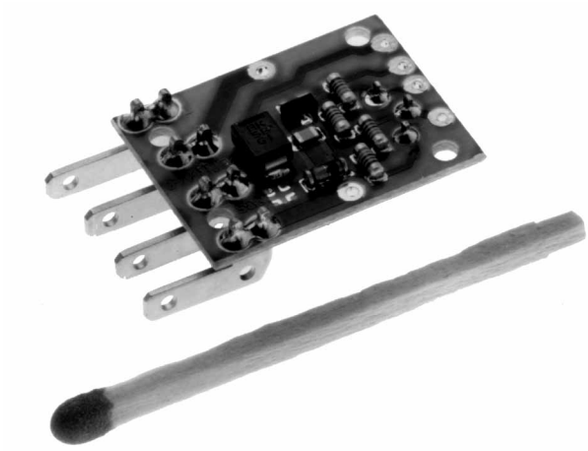

COMMISSION AND MAINTENANCE

Important notes

During assembly and wiring, the appropriate installation guidelines have to be fulfilled.
The chosen fuse rating must not, on any account, be higher than the valve given in the technical data.
Failure to observe this instruction could, in the case of a short circuit, have serious consequences for the preheater or burner system.

WIRING DIAGRAM SOVE 930

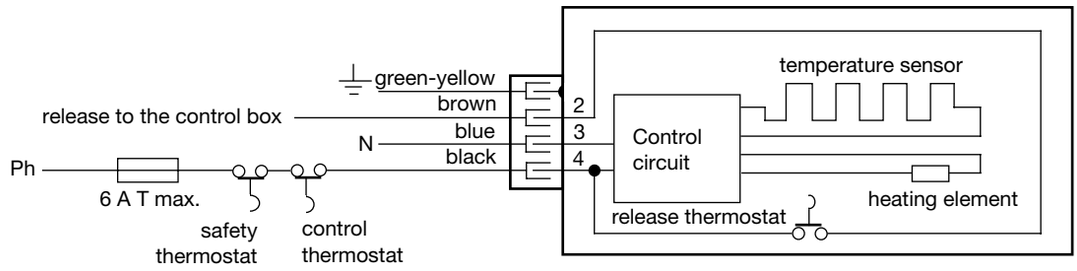

STARTPROCESS SOVE 930 AT A THROUGHPUT OF 2.5 KG/H

Place of measurment: in the oil between shaft and nozzle filter – Test fluid: Shell Calibration fluid – Voltage: 230 V

temperature (° C)

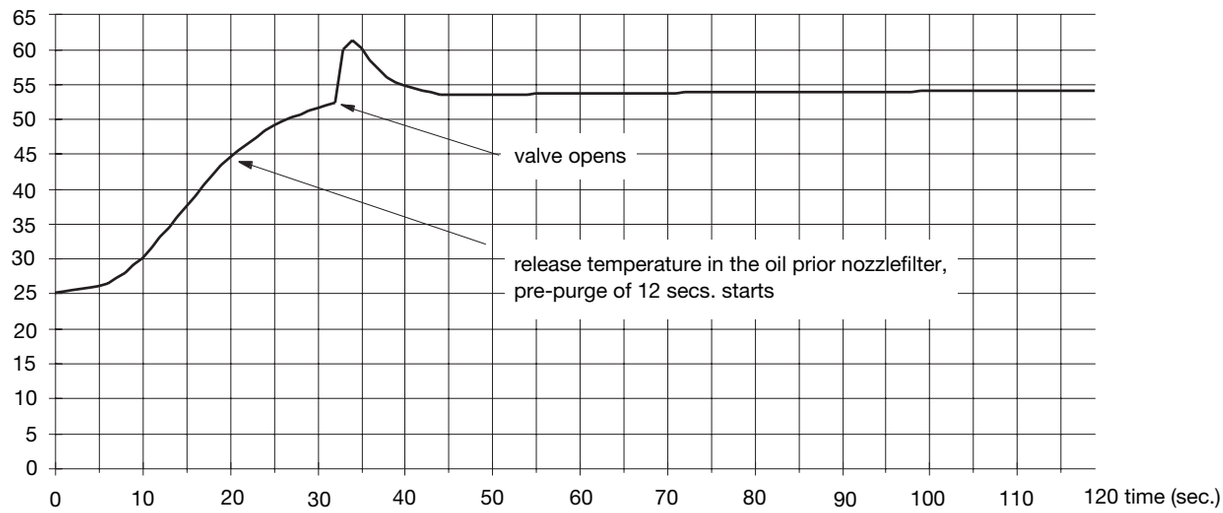

SOVE 930, OIL OUTLET TEMPERATURE AS A FUNCTION OF THROUGHPUT AND POWER

Place of measurment: in the oil between shaft and nozzle filter – Test fluid: Shell Calibration fluid – Voltage: 230 V

temperature (° C)

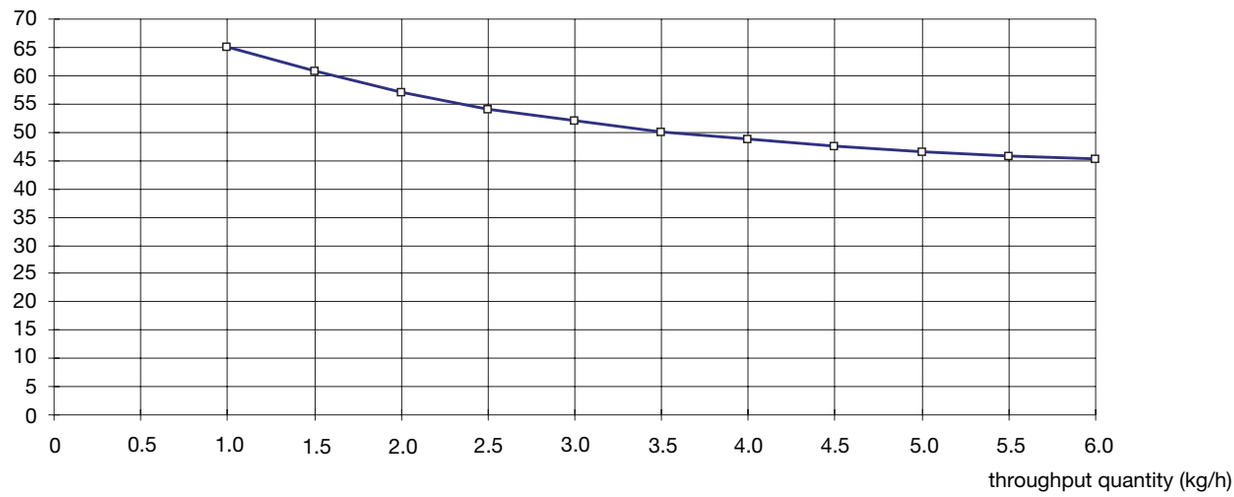

Variation of the voltage between 205 V and 255 V changes the temperature related to the throughput quantity only for max. ± 1° C.

SECTIONAL DRAWING SOVE 930 (1:1)

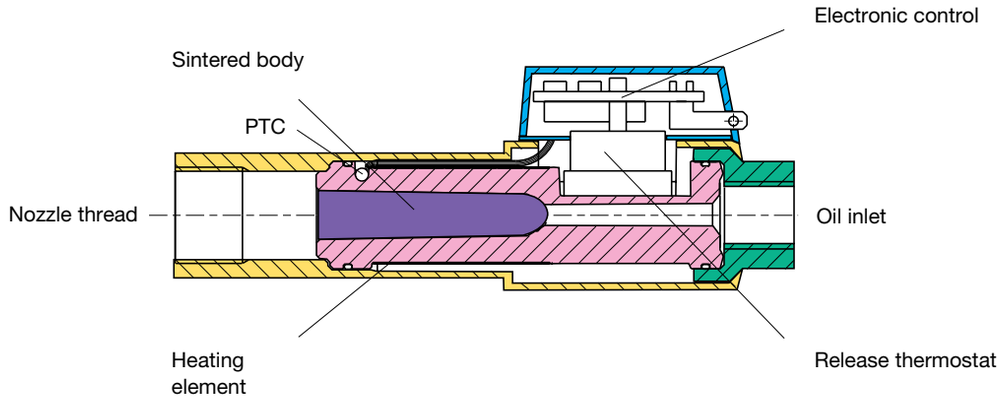

SCALE DRAWING SOVE 930

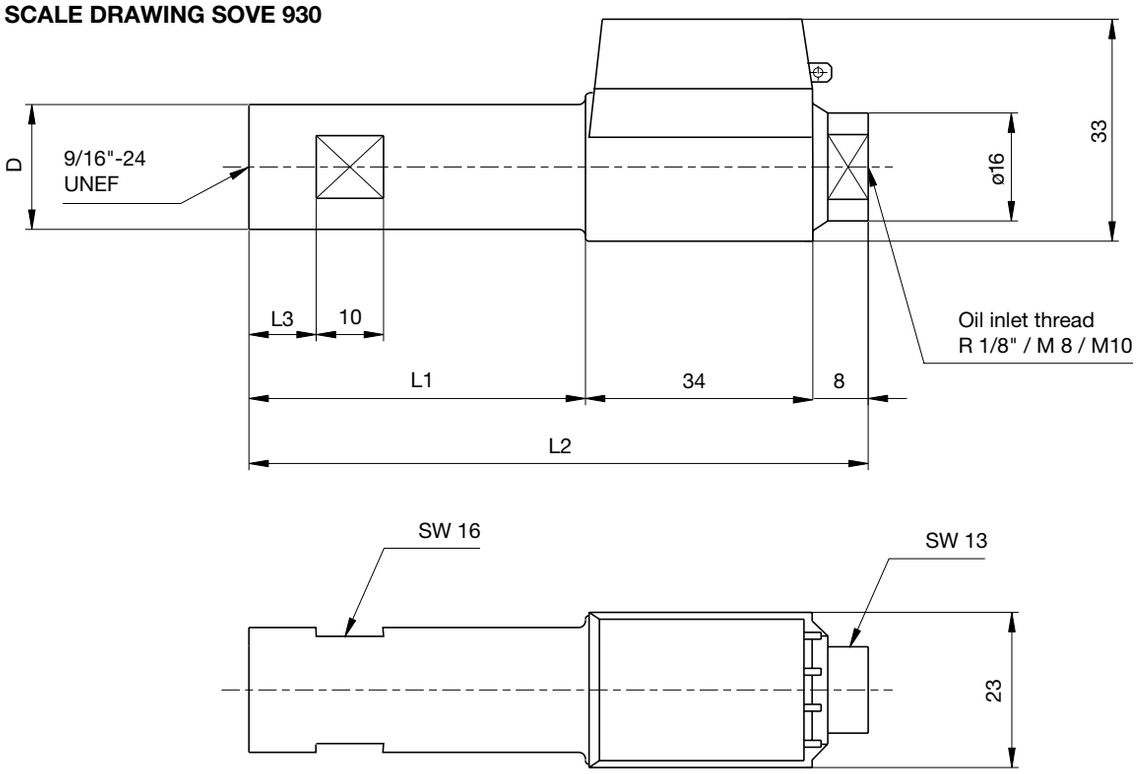

Dimensions

L1	L2	L3	D	Versions
50	92	10	18.5	SOVE 930 standard
90	132	20	18.5	SOVE 930 L

The dimensions L1 and D
can also be customized according to customers drawings.

ORDERING INFORMATION

ITEM	DESIGNATION	ITEM NO.
oil preheater	preheater SOVE 930 standard	10100
Supply cable	preheater supply cable 4-wire, 400 mm	7244001

The above ordering information refers to the standard version.
Special versions are also included in our product range.

Specifications subject to change without notice.

Satronic AG
Brüelstrasse 7
Postfach 324
CH-8157 Dielsdorf

Oil preheater uncontrolled

For oil burners with a throughput capacity from 1.5 to 6 kg/h
With a continous heating capacity of 35 or 55 watts



INTRODUCTION

Depending on the throughput and heating power of the SOVU 930, the oil outlet temperature is increased by 30... 50° C which increases the ignition capability of the burner considerably, and flame stabilisation is achieved.

CONSTRUCTIONAL FEATURES

The basic component is a tube containing a sintered body, which by its nature has a very large surface area for transmitting the temperature to the oil. The heating power, per unit of surface area is correspondingly low, which prevents coking.
A heating element of 35 or 55 watts is wound round the tube and is protected by a solid brass jacket, secured against rotation. The oil is supplied through a central connection.
The release thermostat is thermally connected to the shaft and, together with the terminals for the heating element, is mounted in a plastic housing. This housing protects against shock damage and the ingress of dirt.
Supply cable and preheater can be seperated by a plug connector. This permits easy installation and removal.

TECHNICAL DATA

Operating voltage	220 / 240 V (-15... +10%) 50 Hz (40 - 60 Hz)
Release contact switching current	4 A permanent current (cos φ 0.6)
Heating power	55 / 35 W
Oil flow throughput	between 1.5 and ca. 6 kg/h
Permissible pressure	max. 25 bar
Oil volume	2 cm3
Preheat time at 15° C input temperature	35 / 55 sec.
Weight	105 g
Wrench size	
- jacket	SW 16
- oil inlet part	SW 13

APPLICATIONS ENGINEERING FEATURES

To prevent switching off when not desired as a result of oil temperature fluctuations, the SOVU 930 preheater should always be operated with an automatic oil burner safety control having an overriding contact.
The burner safety control must switch off the preheater in the event of a shutdown caused by a fault.
The SOVU 930 preheater is a reliable and rugged design. The central oil connection, the cylindrical shape and the electrical supply with plug connector allow this unit to be fitted in any burner unit. The plug connector is fully compatible with all available connectors.
The **SOVE 930 electronically controlled preheater** is available for more demanding applications (providing increased heating power, oil outlet temperature independant of flow and inlet temperature; thermostat loop and overriding contact not necessairy, max. temperature-limit at 80° C at 0-throughput).
The heating power of the oil preheater should be selected so that with the smallest possible throughput the outlet temperature corresponds to the desired demands according to the diagram shown below.

DESCRIPTION OF OPERATION

The SOVU 930 preheater is an uncontrolled version with a heating element. The temperature of the oil is raised gradually by a heat exchanger with a large surface area. The design ensures a very good distribution of heat.
At the start, the oil gets heated by a heating power of 35 or 55 W until the release temperature has been reached. Then, the contact of the release thermostat closes and the burner will start. In operation, the oil outlet temperature depends mainly on the selected heating power, the throughput and the oil inlet temperature.

COMMISSION AND MAINTENANCE

Important notes

During assembly and wiring, the appropriate installation guidelines have to be fulfilled.
The chosen fuse rating must not, on any account, be higher than the valve given in the technical data.
Failure to observe this instruction could, in the case of a short circuit, have serious consequences for the preheater or burner system.

WIRING DIAGRAM SOVU 930

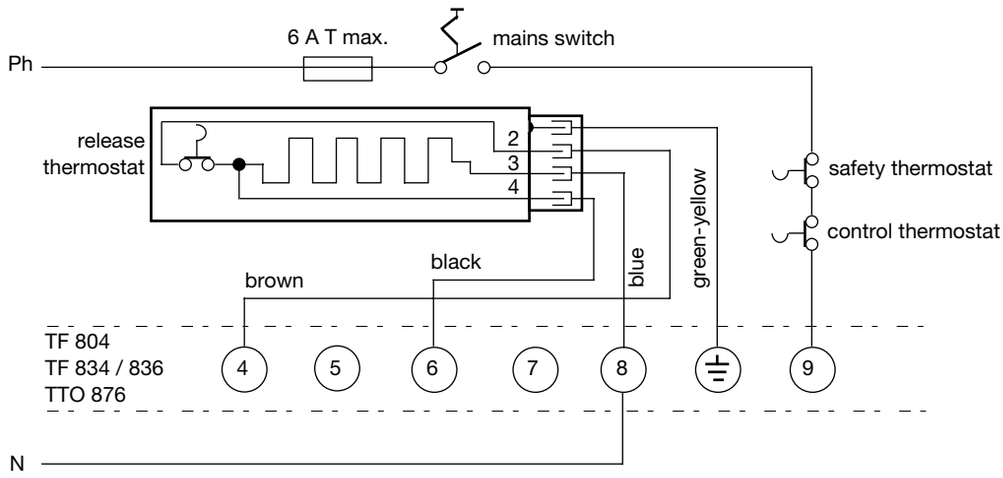

STARTPROCESS SOVU 930 35 W AT A THROUGHPUT OF 2.5 KG/H

Place of measurment: in the oil between shaft and nozzle filter – Test fluid: Shell Calibration fluid – Voltage: 230 V

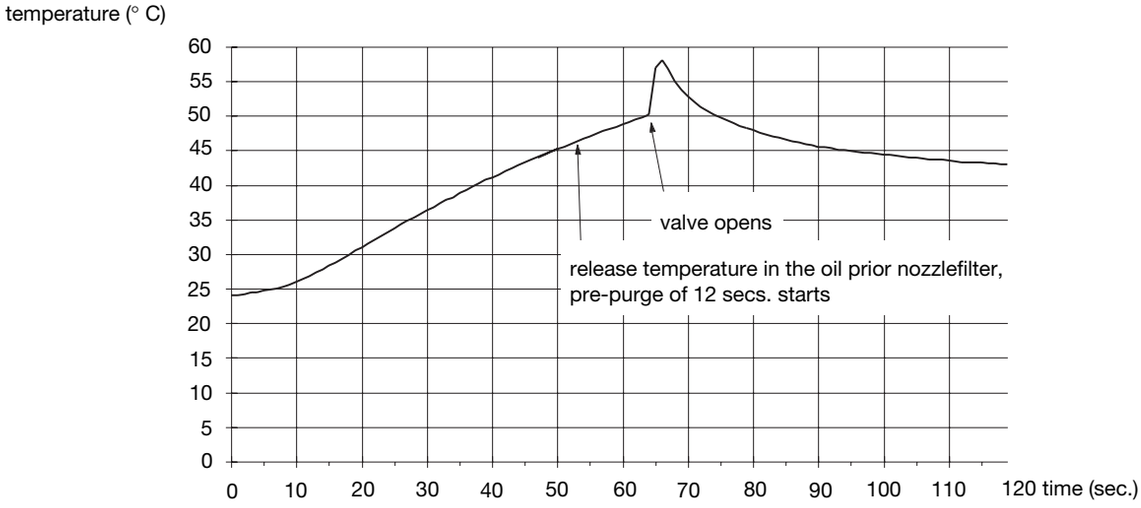

SOVU 930 35 W, OIL OUTLET TEMPERATURE AS A FUNCTION OF THROUGHPUT AND POWER

Place of measurment: in the oil between shaft and nozzle filter – Test fluid: Shell Calibration fluid – Voltage: 230 V

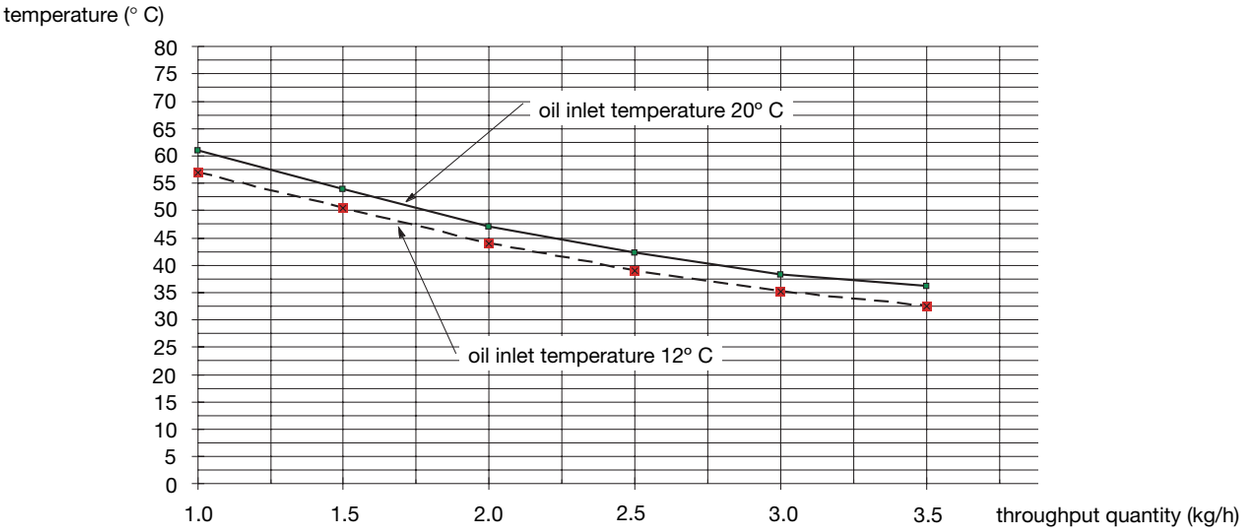

STARTPROCESS SOVU 930 55 W AT A THROUGHPUT OF 2.5 KG/H

Place of measurment: in the oil between shaft and nozzle filter – Test fluid: Shell Calibration fluid – Voltage: 230 V

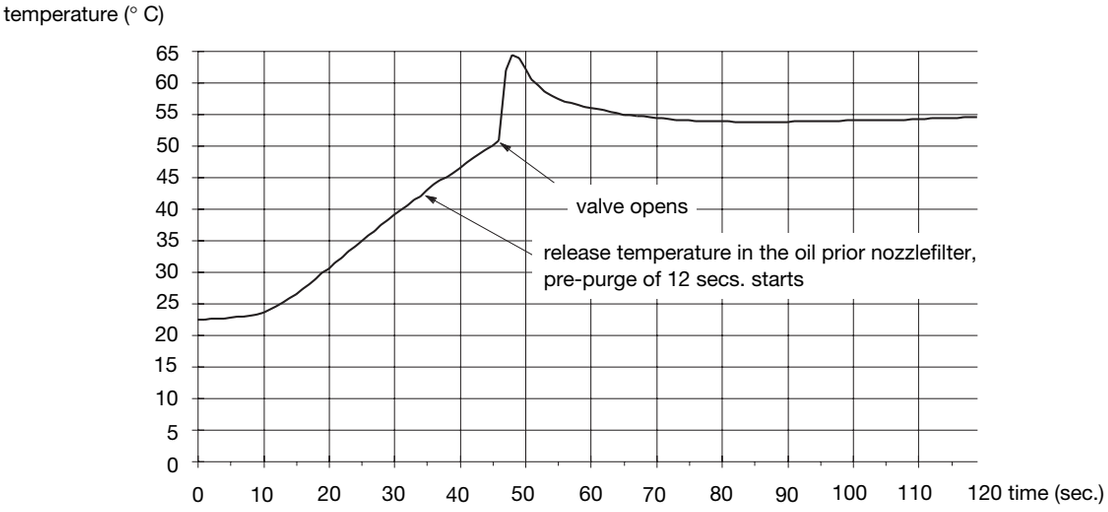

SOVU 930 55 W, OIL OUTLET TEMPERATURE AS A FUNCTION OF THROUGHPUT AND POWER

Place of measurment: in the oil between shaft and nozzle filter – Test fluid: Shell Calibration fluid – Voltage: 230 V

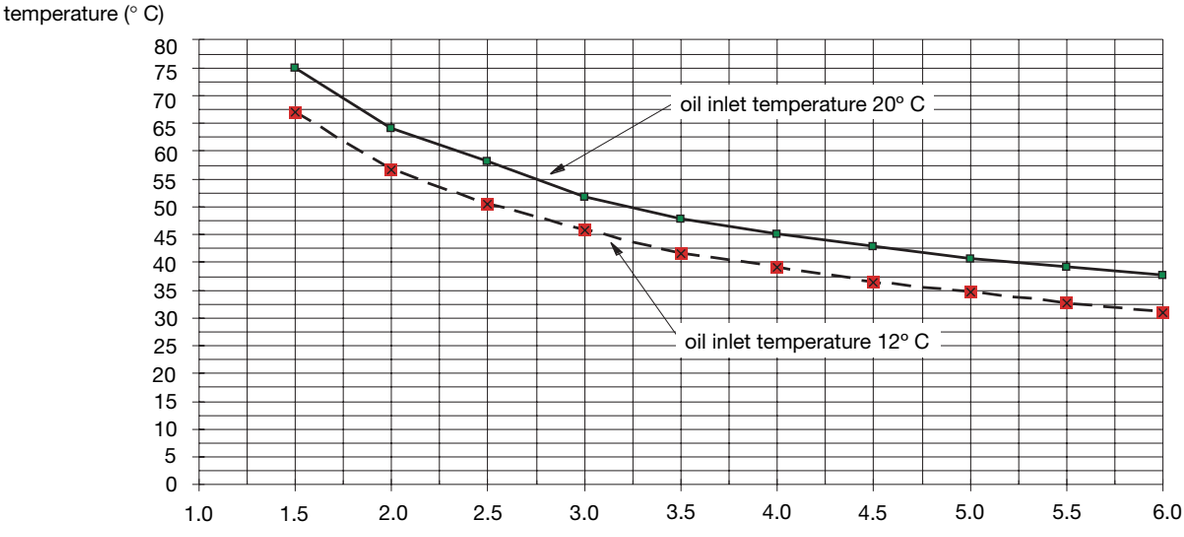

SECTIONAL DRAWING SOVU 930 (1:1)

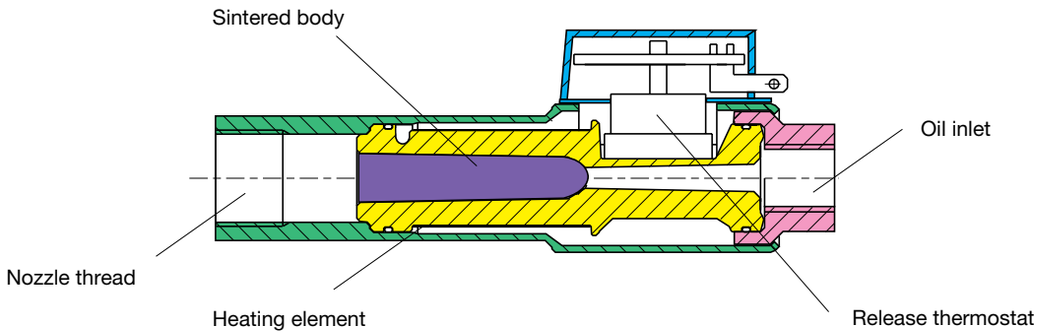

SCALE DRAWING SOVU 930

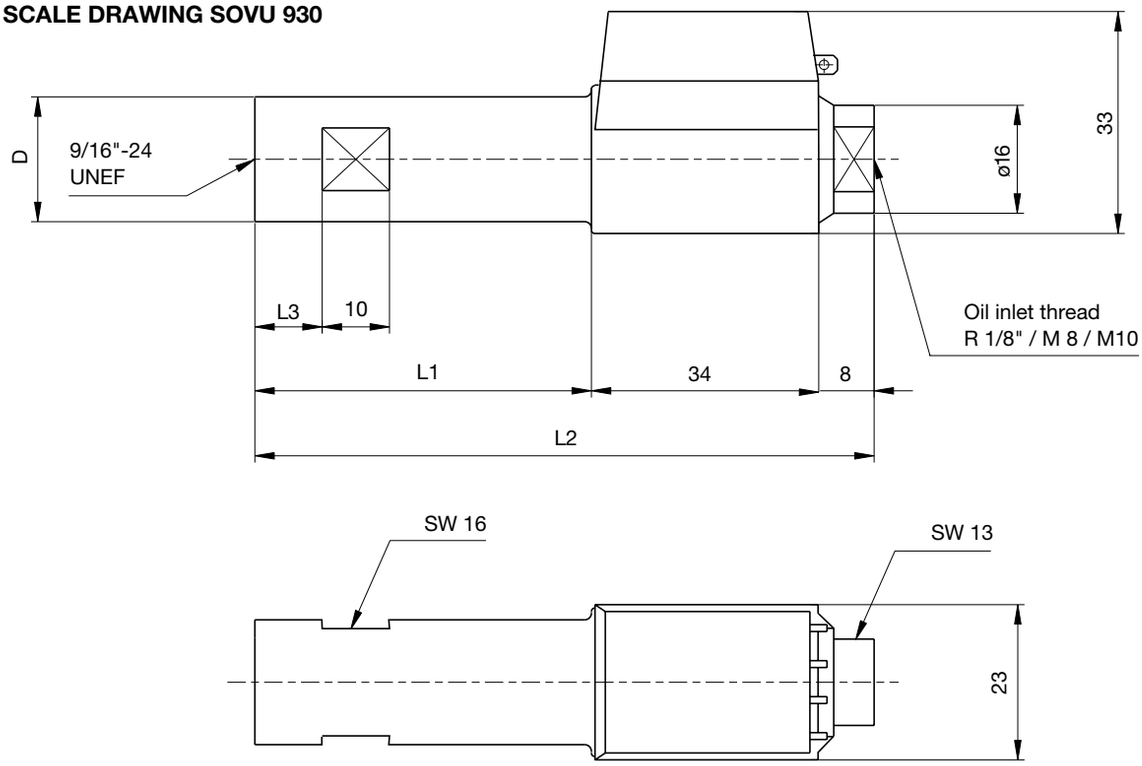

Dimensions

L1	L2	L3	D	Versions
50	92	10	18.5	SOVU 930 standard
90	132	20	18.5	SOVU 930 L

The dimensions L1 and D
can also be customized according to customers drawings.

ORDERING INFORMATION

ITEM	DESIGNATION	ITEM NO.
oil preheater	preheater SOVU 930 55 W standard	10200
oil preheater	preheater SOVU 930 35 W standard	10300
Supply cable	preheater supply-cable 4-pol., 400 mm	7244001

The above ordering information refers to the standard version.
Special versions are also included in our product range.

Specifications subject to change without notice.

Satronic AG
Brüelstrasse 7
Postfach 324
CH-8157 Dielsdorf

High Frequency Ignition Transformers

The ZT 8 is designed for application with small fully automatic oil burners, blown gas burners and atmospheric gas boilers



INTRODUCTION

The ignition transformer comprises a transistorised oscillator which produces a high frequency voltage.This voltage, at approximately 20 KHZ, is in turn applied to a conventional ironcored transformer which raises the voltage still further to that required for ignition purposes.
Depending upon the model number, the peak output voltage is between 10 KV and 14 KV, and the ignition spark produced is similar in characteristic to that of a conventional ignition transformer.
The oscillator and transformer sections are housed inside a tough plastic enclosure having high insulation properties, and forms an extremely neat and compact system.
General constructional details are in accordance with VDE regulations. Similarly some models are specifically approved for use in certain countries, e.g. ZT 812 approval by British Gas for use in the United Kingdom.
The dimensions and fixing arrangements allow it to be easily mounted in combination with the Satronic TF 800 and TFI 800 oil and gas burner safety controls series.
An input supply cable is provided, and depending upon the model, either one or two High Tension output cables are incorporated. The H.T. cables are insulated with superior quality Silicon and are available in various lengths, for precise details see specification table.

INSTALLATION INSTRUCTIONS

Best results are achieved if installation is made in accordance with the following suggestions.
Observe correct wiring polarity, and where appropriate the earth wire must be connected, otherwise damage to the device may result.
H.T. cable runs to the ignition electrodes should be kept as short as possible, avoiding unnecessary bends or kinks with the insulation kept clear of any sharp edges.
The H.T. cable should not be run adjacent to other wiring. This is particularly important with regard to flame probe detector wiring on gas burners and gas boilers.
Correct setting of the spark gap between ignition electrodes or electrode and earth is very important to avoid trouble-free operation. Very low ambient temperature and low voltage conditions will give rise to problems if these settings are incorrect, see General Technical Data for recommended gap settings.
Avoid positioning the device where the ambient temperature exceeds 60° C.

APPLICATION NOTES

Various models are available covering different supply voltages, e.g. 110 V, 230 V, 240 V and applications requiring either 1 or 2 H.T. outputs.
In general terms, oil burners will usually employ 2 ignition electrodes and therefore models ZT 801, ZT 802 etc. having 2 H.T. cable outputs should be used for this type of application.It should be noted that these types of ignition transformer are only suitable for small oil burners.To determine suitability, application tests should therefore be carried out to ensure that the volume of combustion air passing across the ignition spark, is not excessive to cause a reduction in spark temperature sufficient to prevent satisfactory ignition.
Gas burners usually employ only 1 ignition electrode, the ignition spark taking place between this and an earthed area of the burner. Models such as ZT 812, ZT 812B, ZT 815 etc with 1 H.T. output cable will therefore be suitable for this type of application.
Blown gas burners using ionisation or flame probe detection will often be affected by ignition spark interference to the flame signal current. The H.T. ignition spark can produce it´s own ionisation current, the polarity of which is random and therefore often in direct opposition to the flame signal current. If sufficient, the interference will swamp the flame signal with the result that nuisance shut-downs can occur. Certain models in the range therefore specially incorporate a power diode in the H.T. output stage. This effectively polarises the ignition ionisation current such that it is in the same direction as the flame signal current and nuisance shut-downs due to ignition interference are therefore avoided. For model details with output diode, see specification table.

The ZT 800 series high frequency ignition transformers are rated for intermittent operation only. Their use with burner safety controls which provide unduly long periods of ignition coupled with frequent on-off cycling should be avoided. This is less critical in the case of most gas burner applications where the ignition period provided by the burner safety control is usually of very short duration.

GENERAL TECHNICAL DATA

Model No	ZT 801	ZT 802	ZT 812	ZT 812B	ZT 815
Supply Voltage (+10%, -15%)	230 V	240 V	220/240 V	220/240 V	110 V/120 V
Supply Frequency (+ / -20%)	50 Hz	50 Hz	50 Hz	50 Hz	50 Hz
Power Consumption	50 VA	50 VA	50 VA	50 VA	50 VA
Secondary Voltage û	2 x 7 kV	2 x 7 kV	10 kV	11,5 kV	8 kV
Secondary Current I_k	17 mA	16 mA	16 mA	19 mA	16 mA
Max. spark gap setting in mm	3-5 mm	3-5 mm	2-3 mm	2-4 mm	2-3 mm

Output Frequency	20 kHz
Max. working ambient temperature	-10 bis +60° C
Rating	Intermittent, 25% E.D.in 3 minutes
Mounting attitude	Any
Weight	approx. 230 gr.
H.T. cable only	Silicon insulated, temperature rating 175° C

Applicable to all types

Article No.	Model No.	Supply Voltage	H.T. Power	H.T. Cable L.mm	H.T. Cable Ømm	H.T. Cable No.	Supply cable L.mm
12000	ZT 801	230 V	no	400	5	2	400
1200001	ZT 801	230 V	no	500	7	2	300
1200002	ZT 801	230 V	no	400	7	2	300
1200003	ZT 801	230 V	no	400	5	2	160
1200004	ZT 801	230 V	no	400	7	2	160
1200006	ZT 801	230 V	no	1000	7	2	300
1200007	ZT 801	230 V	no	400/500	7	2	180
12100	ZT 802	240 V	no	400	7	2	300
12400	ZT 815	110 V	yes	400	7	1	300
1240001	ZT 815	110V/120V	yes	1000	7	1	300
12600	ZT 812	220/240V	yes	400	7	1	300
1260001	ZT 812	220/240V	yes	1000	7	1	300
1260008	ZT 812	220/240V	yes	1500	7	1	300
1260002	ZT 812	220/240V	yes	1500	7	1	650
1260007	ZT 812 B	220/240V	no	400	7	1	180
1260004	ZT 812 B	220/240V	no	400	7	1	300
1260003	ZT 812 B	220/240V	no	1000	7	1	300
1260006	ZT 812 B	220/240V	no	1500	7	1	300

ZT 8..

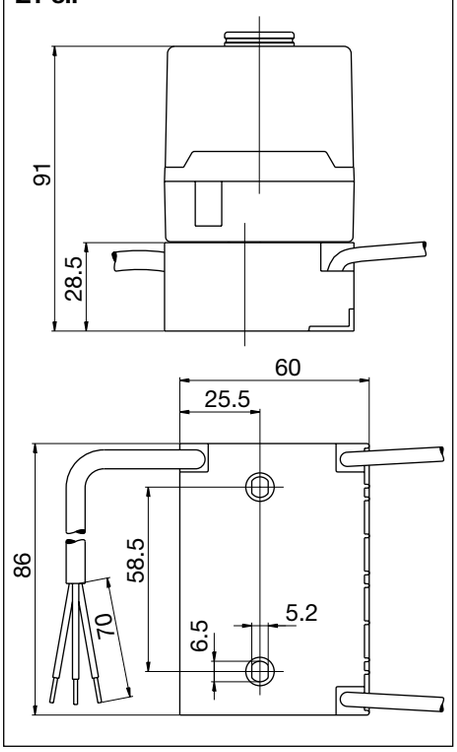

Specifications subject to changes without notice

Satronic AG
Brüelstrasse 7
Postfach 324
CH-8157 Dielsdorf

Ignition spark generator

For atmospheric gas burners.
Mains and high-voltage cables with plug connectors.



INTRODUCTION

The ZT 870 ignition spark generator is particularly suitable for use with the TFI 812 control box, for fully automatic ignition of atmospheric gas burner systems.

CONSTRUCTIONAL FEATURES

The transformer windings and the controlling electronics are contained in a temperature and impact resistant plastic housing, and sealed in a PU resin material which provides optimal protection from dampness and dirt.
One of the two mounting lugs is also designed to provide the earth/ground connection. Plug connectors for the mains and high voltage cables allow quick and simple installation.

DESCRIPTION OF OPERATION

An electronic circuit produces approx. 50 sparks per second. The voltage of these sparks is increased by the transformer to approx. 16 kV.
The secondary voltage as well as the spark energy are independent of the mains frequency and mains voltage.
A reduction in the mains voltage simply causes the spark rate to drop, or respectively, to rise, should the mains voltage be too high.
Interference to ionisation flame detection is avoided by the very short spark interval and also by the stability of the ignition spark.

INSTALLATION INSTRUCTIONS

The applicable installation regulations must be observed when mounting and wiring the unit.
The ignition cable should be kept as short as possible in order to avoid radio interference and a drop in performance.
The compact dimensions and simple installation procedure allow the ZT 870 ignition spark generator to be positioned close to the ignition electrode.

TECHNICAL DATA

Supply voltage	220 / 240 V (-15... +10%) 50 Hz (40 - 60 Hz)
Connections:	
Live / neutral	Satronic 2-pin angled plug
Earth	Mounting lug
High voltage	ø 4 mm plug
Power consumption	17 mA
Switched on time	50% in 3 min.
Interference level	<N
Ignition voltage	16 kV (amplitude)
Ignition current	200 mA (amplitude)
Spark frequency	Approx. 50 Hz
Energy per spark	4 mJ
Spark gap	2... 5 mm
Ignition cable	Silicone, ø 7 mm Standard length, 30 cm
Insulation standard	IP 40
Permissable ambient temperature	-20° C... +60° C
Mounting attitude	any
Weight	220 g

The ZT 870 is also available for a supply voltage of 110/120 V.

ZT 870 DIMENSIONS

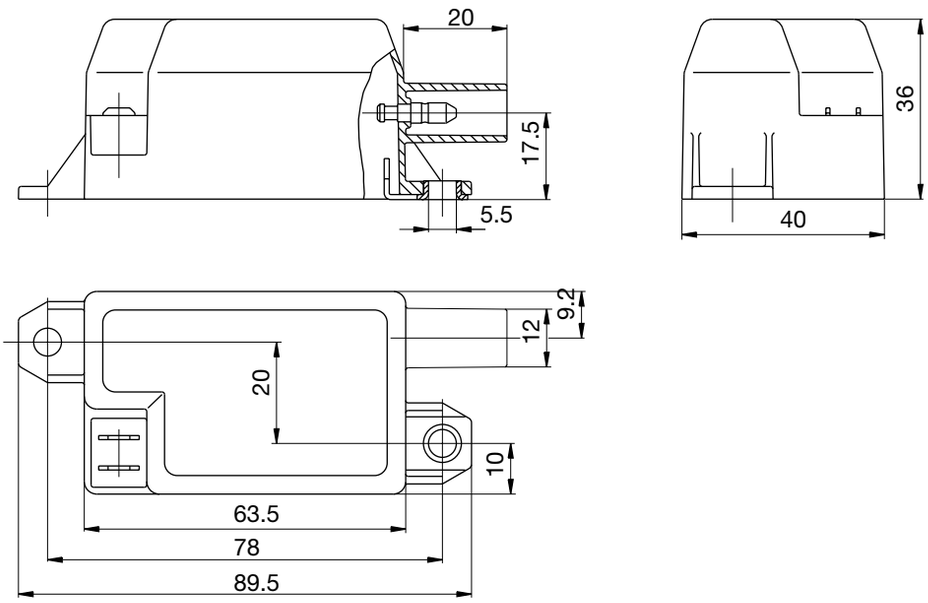

ORDERING INFORMATION

ITEM	DESIGNATION	ITEM NO.
Ignition transformer	ZT 870	13000
Mains cable	ZT 870 supply cord 0.3 m	7293001
Ignition cable	ZT 870 ignition cable 0.3 m	72730
Alternative ign. cable	ZT 870 ignition cable 1 m	72710

The above ordering information refers to the standard version.
Special versions are also included in our product range.

Specifications subject to change without notice.

Satronic AG
Brüelstrasse 7
Postfach 324
CH-8157 Dielsdorf

High frequency ignition unit

For oil and gas dual burners of small to medium rating. With plug-in ignition and power supply cables, designed to fit beneath the burner safety control box.



INTRODUCTION

The ZT 900 high frequency ignition transformer is suitable for use with oil, gas and dual fuel burners of small to medium rating.

CONSTRUCTIONAL FEATURES

A transistorised oscillator produces a high frequency voltage, which is then increased to 14 kV by a conventional iron-cored transformer. Despite the very compact dimensions of the ZT 900 ignition device, it has an outstanding performance in comparison to conventional stray field ignition transformers. The high frequency voltage produces a constant arc with high thermal energy and ideal ignition properties.
The dimensions of the housing and fixing holes are such that it can be mounted underneath the burner control box wiring base.
The power supply for the ZT 900 is provided in the form of a 3 pin AMP type socket connection with a corresponding plug and cable supplied.
In order to meet all likely requirements, the ZT 900 is available in 2 versions:

- ZT 900 4.0 mm pin to suit standard ignition cable connectors, e.g. for pre-assembled "Teflon" H.T. cables.
- ZT 900 1.0 mm pin to suit 7.0 mm silicon H.T. cable in conjunction with the Satronic clip.

INSTALLATION INSTRUCTIONS

The applicable regulations must be observed when mounting the device and carrying out the electrical connections. Particular attention must be given to method used to instal the H.T. cables. Avoid unnecessary lengths, sharp bends over hard edges, extremely high temperatures etc., any of which could give rise to reduced performance or possible problems.

For trouble-free operation, the correct spark gap at the ignition electrodes must be observed, supply voltage reductions and low ambient temperatures can give rise to problems if this is incorrect, see "Technical data" for recommended settings.

The positioning of the H.T. ignition cables with regard to TV and radio interference is also extremely important. The cables should be kept short, run as close together as possible and should not cross or be in contact with any other power cables or fittings.

TECHNICAL DATA

Supply voltage	220 / 240 V (-15... +10%) 50 Hz (40 - 60 Hz)
Connections:	
Live / neutral / earth	3 AMP plug type terminals 6.30 x 0.8 mm
High tension	ø 4 mm pin or ø 1 mm pin
Primary current	0.4 A
Rating	Intermittent, 33 % E.D. in 3 minutes
Interference level	<N (VDE 0875)
Ignition voltage	2 x 7 kV
Secondary current	40 mA rms
Secondary frequency	20 kHz
Spark gap	2 - 3 mm
Ignition cable	plug-in type
Insulation standard	IP 40
Permissable ambient temperature	-10° C... +60° C
Mounting attitude	any
Weight	280 g

ZT 900 DIMENSIONS

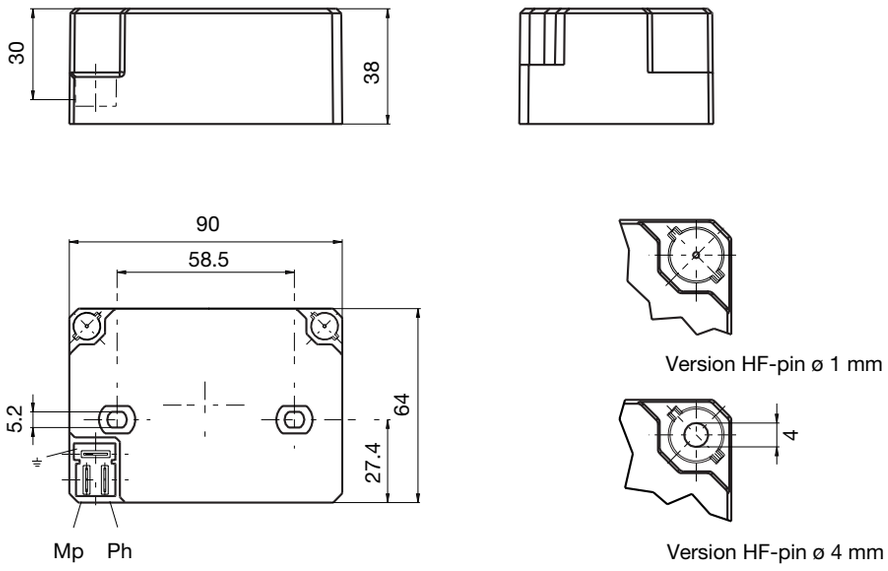

ZT 900 SUPPLY CORD PLUG DIMENSIONS

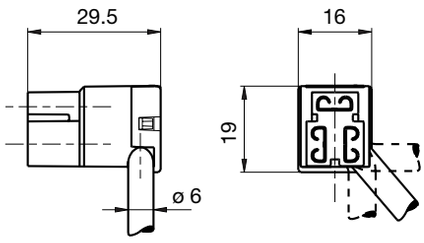

HIGH VOLTAGE CABLE CLIP DIMENSIONS

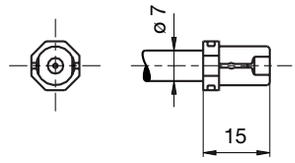

ORDERING INFORMATION

ITEM	DESIGNATION	ITEM NO.
Ignition Unit	ZT 900 pin ø 1 mm	13101
or	ZT 900 pin ø 4 mm	13104
H.T. cable	H.T. cable ZT 900, 0.3 m	7283001
Ignition cable with clip, suitable for Item no. 13101	Silicon cable ø 7 mm, 0.4 m	7274009
Clip seperat to silicon cable	High Voltage Cable Clip	74993

The above ordering information refers to the standard version.
Special versions are also included in our product range.

Specifications subject to change without notice.

Satronic AG
Brüelstrasse 7
Postfach 324
CH-8157 Dielsdorf

High frequency ignition unit

For oil and gas dual burners of small to medium rating. With plug-in ignition and power supply cables, designed to fit beneath the burner safety control box.



INTRODUCTION

The ZT 930 high frequency ignition transformer is suitable for use with oil, gas and dual fuel burners of small to medium rating. The ZT 930 enables a big spark deformation on burners with a high fire-rating or high combustion-air velocity. In addition to this, it generates the lowest electromagnetic interferrences of all known electronic ignition devices, which is especially important if the burner has to comply with EN 55014. The ZT 930 combines a low power consumption with a low inrush current. The power connector is compatible with the widely used 3-wire connector. A replacement with a plugable coil trafo is therefore possible without any problems.

CONSTRUCTIONAL FEATURES

A transistorised oscillator produces a high frequency voltage, which is then increased to 14 kV by a conventional iron-cored transformer. Despite the very compact dimensions of the ZT 930 ignition device, it has an outstanding performance in comparison to conventional stray field ignition transformers. The high frequency voltage produces an interrupting arc with high thermal energy and ideal ignition properties. The dimensions of the housing and fixing holes are such that it can be mounted underneath the burner control box wiring base. The power supply for the ZT 930 is provided in the form of a 3 pin AMP type socket connection with a corresponding plug and cable supplied.
In order to meet all likely requirements, the ZT 930 is available in 2 versions:

- ZT 930 4.0 mm pin to suit standard ignition cable connectors, e.g. for pre-assembled "Teflon" H.T. cables.
- ZT 930 1.0 mm pin to suit 7.0 mm silicon H.T. cable in conjunction with the Satronic clip.

INSTALLATION INSTRUCTIONS

The applicable regulations must be observed when mounting the device and carrying out the electrical connections. Particular attention must be given to method used to instal the H.T. cables. Avoid unnecessary lengths, sharp bends over hard edges, extremely high temperatures etc., any of which could give rise to reduced performance or possible problems. For trouble-free operation, the correct spark gap at the ignition electrodes must be observed, supply voltage reductions and low ambient temperatures can give rise to problems if this is incorrect, see "Technical data" for recommended settings. The positioning of the H.T. ignition cables with regard to TV and radio interference is also extremely important. The cables should be kept short, run as close together as possible and should not cross or be in contact with any other power cables or fittings.

TECHNICAL DATA

Supply voltage	220 / 240 V (-15... +10%) 50 Hz (40 - 60 Hz)
Connections:	
Live / neutral / earth	3 AMP plug type terminals 6.30 x 0.8 mm
High tension	ø 4 mm pin or ø 1 mm pin
Primary current	0.25 A
Rating	Intermittent, 33 % E.D. in 3 minutes
Interference level	<N (VDE 0875)
Ignition voltage	2 x 7 kV
Secondary current	40 mA rms
Secondary frequency	20 kHz
Spark gap	3 - 5 mm
Ignition cable	plug-in type
Insulation standard	IP 40
Permissable ambient temperature	-10° C... +60° C
Mounting attitude	any
Weight	280 g

The ZT 930 is also available for a supply voltage of 110/120 V.

ZT 930 DIMENSIONS

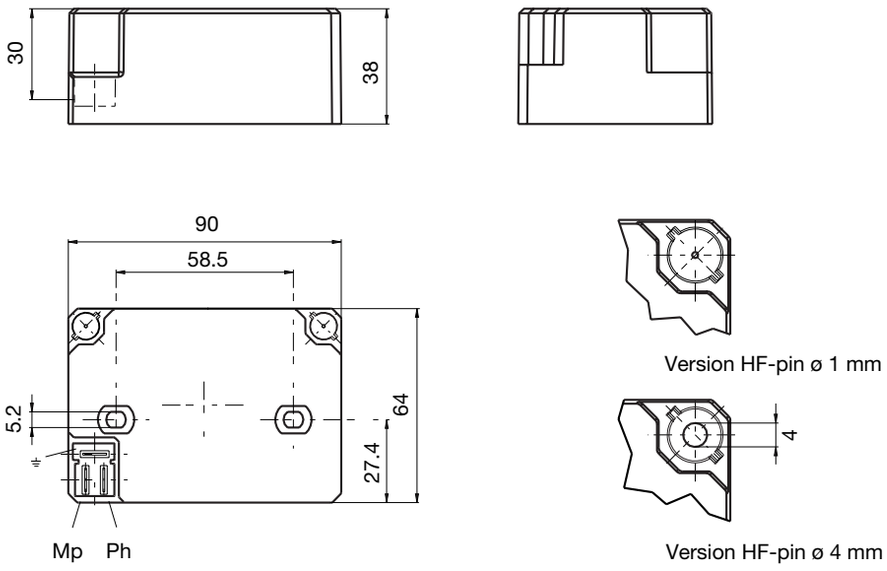

ZT 930 SUPPLY CORD PLUG DIMENSIONS

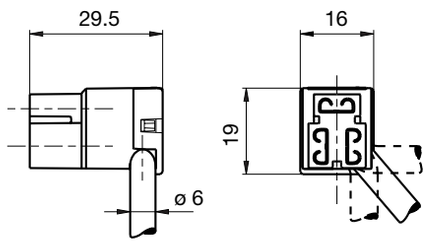

HIGH VOLTAGE CABLE CLIP DIMENSIONS

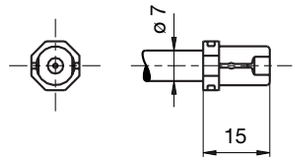

ORDERING INFORMATION

ITEM	DESIGNATION	ITEM NO.
Ignition Unit	ZT 930 pin ø 1 mm	13121
or	ZT 930 pin ø 4 mm	13124
H.T. cable	H.T. cable ZT 900, 0.3 m	7283001
Ignition cable with clip, suitable for Item no. 13101	Silicon cable ø 7 mm, 0.4 m	7274009
Clip seperat to silicon cable	High Voltage Cable Clip	74993

The above ordering information refers to the standard version.
Special versions are also included in our product range.

Specifications subject to change without notice.

Satronic AG
Brüelstrasse 7
Postfach 324
CH-8157 Dielsdorf

High frequency ignition unit

For power gas burners of unlimited rating. With plug-in ignition and power supply cables, designed to fit beneath the burner safety control box.



INTRODUCTION

The ZT 931 high frequency ignition transformer is suitable for use with power gas burners of unlimited rating. The ZT 931 enables a big spark deformation on burners with a high fire-rating or high combustion-air velocity. In addition to this, it generates the lowest electromagnetic interferrences of all known electronic ignition devices, which is especially important if the burner has to comply with EN 55014. The ZT 931 combines a low power consumption with a low inrush current. The power connector is compatible with the widely used 3-wire connector. A replacement with a plugable coil trafo is therefore possible without any problems.

CONSTRUCTIONAL FEATURES

A transistorised oscillator produces a high frequency voltage, which is then increased to 14 kV by a conventional iron-cored transformer. Despite the very compact dimensions of the ZT 931 ignition device, it has an outstanding performance in comparison to conventional stray field ignition transformers. The high frequency voltage produces an interrupting arc with high thermal energy and ideal ignition properties. The dimensions of the housing and fixing holes are such that it can be mounted underneath the burner control box wiring base. The power supply for the ZT 931 is provided in the form of a 3 pin AMP type socket connection with a corresponding plug and cable supplied.
In order to meet all likely requirements, the ZT 931 is available in 2 versions:
- ZT 931 4.0 mm pin to suit standard ignition cable connectors, e.g. for pre-assembled "Teflon" H.T. cables.
- ZT 931 1.0 mm pin to suit 7.0 mm silicon H.T. cable in conjunction with the Satronic clip.

INSTALLATION INSTRUCTIONS

The applicable regulations must be observed when mounting the device and carrying out the electrical connections. Particular attention must be given to method used to instal the H.T. cables. Avoid unnecessary lengths, sharp bends over hard edges, extremely high temperatures etc., any of which could give rise to reduced performance or possible problems. For trouble-free operation, the correct spark gap at the ignition electrodes must be observed, supply voltage reductions of minus 15% and low as well as high ambient temperatures can give rise to problems. If this is incorrect, see "Technical data" for recommended settings. The positioning of the H.T. ignition cables with regard to TV and radio interference is also extremely important. The cables should be kept short, run as close together as possible and should not cross or be in contact with any other power cables or fittings.

TECHNICAL DATA

Supply voltage	220 / 240 V (-15... +10%) 50 Hz (40 - 60 Hz)
Connections:	
Live / neutral / earth	3 AMP plug type terminals 6.30 x 0.8 mm
High tension	ø 4 mm pin or ø 1 mm pin
Primary current	0.25 A
Rating	Intermittent, 33 % E.D. in 3 minutes
Interference level	<N (VDE 0875)
Ignition voltage	1 x 14 kV
Secondary current	40 mA rms
Secondary frequency	20 kHz
Spark gap	3 - 5 mm
Ignition cable	plug-in type
Insulation standard	IP 40
Permissable ambient temperature	-10° C... +60° C
Mounting attitude	any
Weight	280 g

The ZT 931 is also available for a supply voltage of 110/120 V.

ZT 931 DIMENSIONS

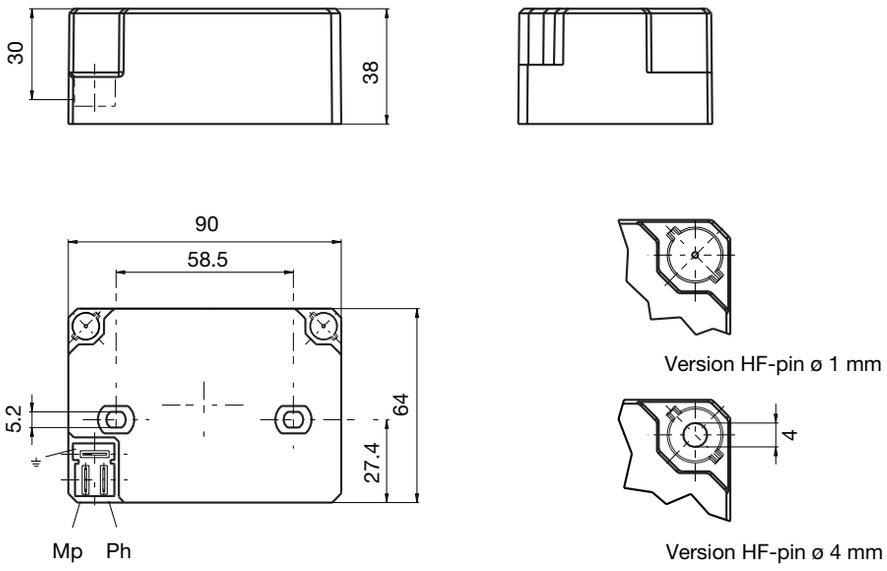

ZT 931 POWER CABLE PLUG DIMENSIONS

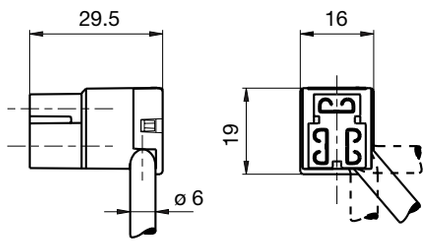

HIGH VOLTAGE CABLE CLIP DIMENSIONS

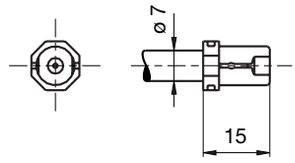

ORDERING INFORMATION

ITEM	DESIGNATION	ITEM NO.
Ignition Unit	ZT 931 pin ø 1 mm	13131
or	ZT 931 pin ø 4 mm	13134
Power cable	Power cable ZT 900, 0.3 m	7283001
Ignition cable with clip, suitable for Item no. 13131	Silicon cable ø 7 mm, 0.4 m	7274009
Clip seperat to silicon cable	High Voltage Cable Clip	74993

The above ordering information refers to the standard version.
Special versions are also included in our product range.

Specifications subject to change without notice.

Satronic AG
Brüelstrasse 7
Postfach 324
CH-8157 Dielsdorf

Adaptor Baseplate

**Adaptor baseplate for the
TF 701-1 / TF 801 burner control box
For replacement of the
KBR / TF 20 - TF 21 A - TF 22 series**



INTRODUCTION

The US 7900 adaptor baseplate together with a TF 701-1 / TF 801 burner control box can be used to replace an old model from the KBR / TF 20 - TF 21 A - TF 22 series.

First of all, the connections from the photo-cell must be released from the existing baseplate. The adaptor baseplate can then be plugged into position and secured by its screw. The photo-cell (possibly new) can then be connected to the terminals A and B in the adaptor baseplate.

After plugging in and securing the TF 701-1 / TF 801 burner control box, the burner system is again ready for operation.

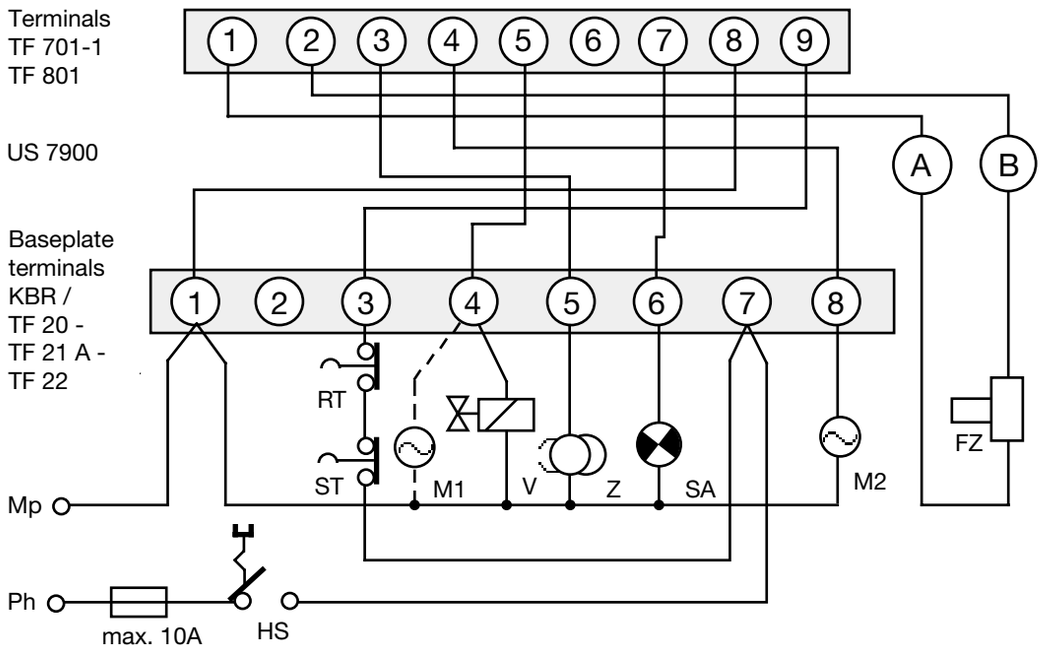

HS	Main switch	ST	Limit thermostat	RT	Control thermostat
Z	Ignition transformer	M1	Burner motor	M2	With solenoid valve
V	Solenoid valve		Motor for burner without solenoid valve	SA	Remote lockout indicator
FZ	FZ 711 photo-cell or FZ 777 or FZ 612				

EXAMPLES OF APPLICATION

Existing equipment — replaced by → — New equipment

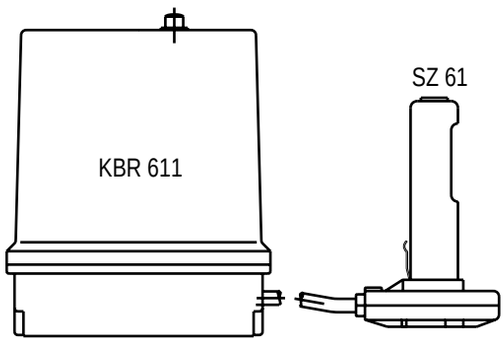

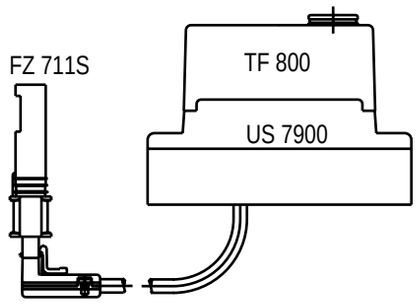

The SZ61 light sensor must be replaced by the FZ 711G photo-cell.

The photo-cell must be connected to terminals A and B of the adaptor baseplate.

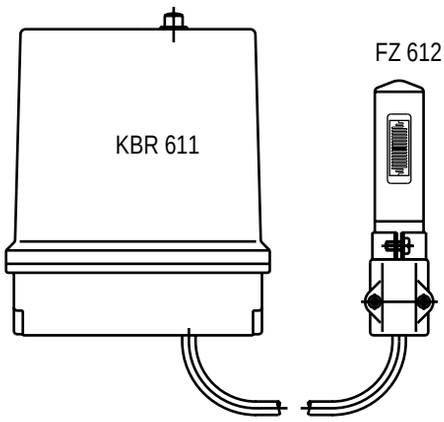

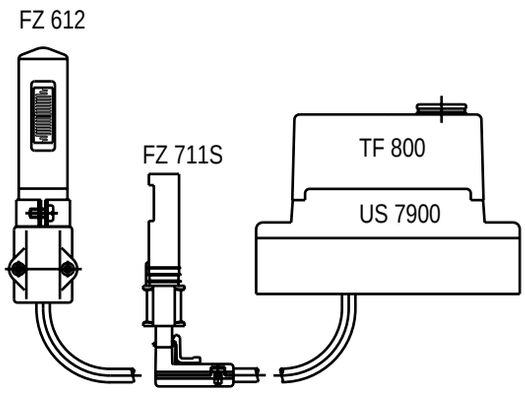

The photo-cell must be connected to terminals A and B of the adaptor baseplate.

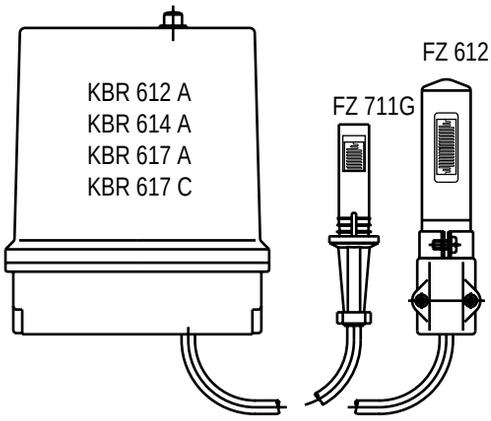

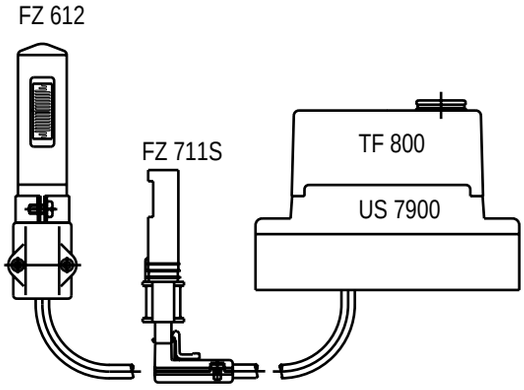

The photo-cell must be connected to terminals A and B of the adaptor baseplate.

ORDERING INFORMATION

ITEM	DESIGNATION	ITEM NO.
Adaptor baseplate	US 7900	18780

Specification subject to changes without notice.

Satronic AG
Brüelstrasse 7
Postfach 324
CH-8157 Dielsdorf

Adaptor Baseplate

Adaptor baseplate for the MMI 810 model 32 / 33 or TTI 790 model 33 gas burner control boxes for replacement of the GBR 681 control box.



INTRODUCTION

The US 7910 adaptor baseplate together with an MMI 810 model 32 / 33 or TTI 790 model 33 can be used to replace an old GBR 681 unit.

It is not necessary to rewire the burner system. In two-stage burners, valve 2 can be connected to terminal A on the adaptor baseplate.

The MMI 810 control box then gives the release signal to the burner second stage approx. 12 sec. after flame establishment.

Insert as per DIN 4788

MMI 810 model 33
- 1st stage rating max. 120 KW / 80.000 kcal/h

MMI 810 model 32
- 1st stage rating max. 350 KW / 300.000 kcal/h

TTI 790 model 33
- start rating max. 120 KW / 80.000 kcal/h

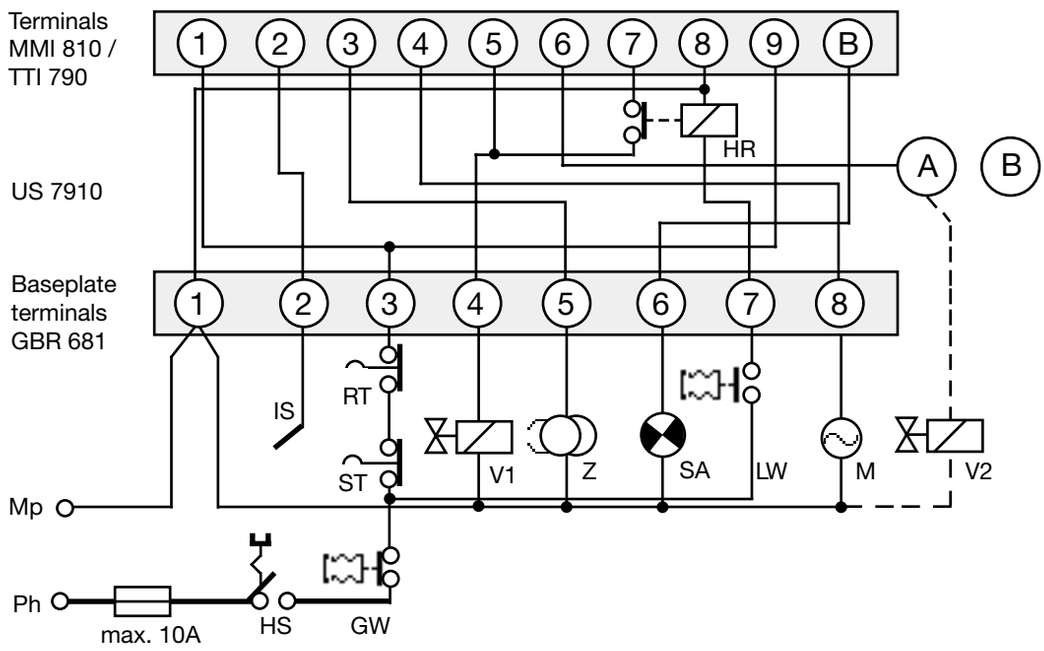

HS	Main switch	HR	Secondary relay	V1	Solenoid valve 1st stage
GW	Gas proving switch	IS	Ionisation probe	V2	Solenoid valve 2nd stage
ST	Safety thermostat	Z	Ignition	LW	Air proving switch
RT	Regulating thermostat	M	Burner motor	SA	Remote lockout indicator

EXAMPLES OF APPLICATION

Existing equipment → replaced by → New equipment

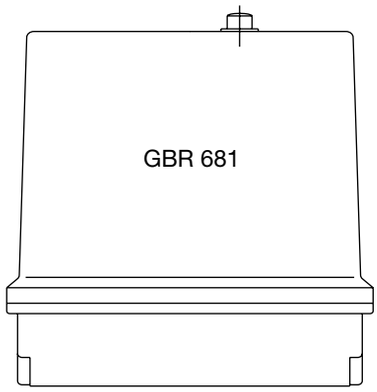

1st stage start rating
up to max. 120 KW / 80.000 kcal/h
(as per DIN 4788)

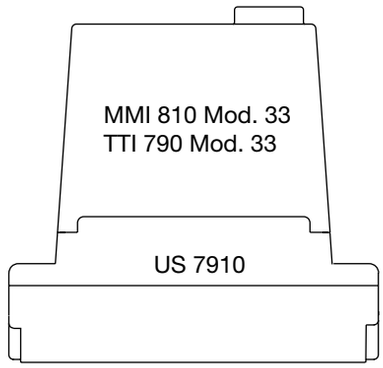

Caution:

After loss of flame,
the TTI 790 control box
attempts to restart,
in contrast to the GBR 681
which goes to lockout.

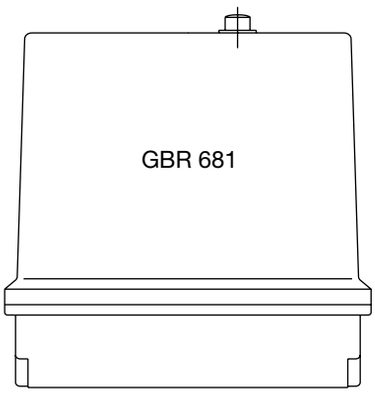

1st stage start rating
Only MMI 810 model 32
up to max. 350 KW / 300.000 kcal/h
should be used
(as per DIN 4788)

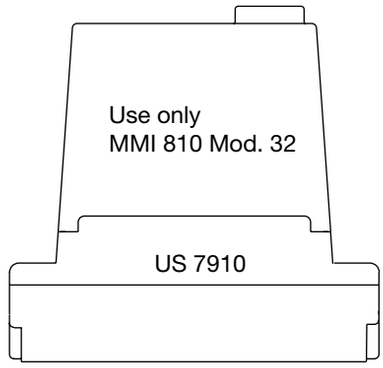

When replacing the GBR 681/74 gas burner control box, the US 7920 adaptor baseplate must be used.

ORDERING INFORMATION

ITEM	DESIGNATION	ITEM NO.
Adaptor baseplate	US 7910	18782

Specifications subject to change without notice.

Adapter base

**Adapter base for Satronic TF oilburner control boxes
to the Danfoss wiring base**



INTRODUCTION

The adapter base US 93. replaces together with a Satronic oilburner control box TF 83. a Danfoss oilburner control box of the BHO 1.. line.

ATTENTION

For saftey reasons, the Danfoss photocell type LD **MUST** be replaced with a Satronic photocell type MZ 770 S.

INSTALLATION

Beside changing the photocell, no other changes or modifications are necessary for the types US 932 and US 934.

On the type US 930, it is necessary to check if the control thermostat is wired according to the following wiring diagram. Please note the corresponding note on the adapter base.

The total hight of the combination of an US 93. and control box TF 83. is exactly the same as the hight of a Danfoss control box type BHO 1.. The central locking screw fixes the adapter base and the control box safely on the original base.

EXCHANGE...

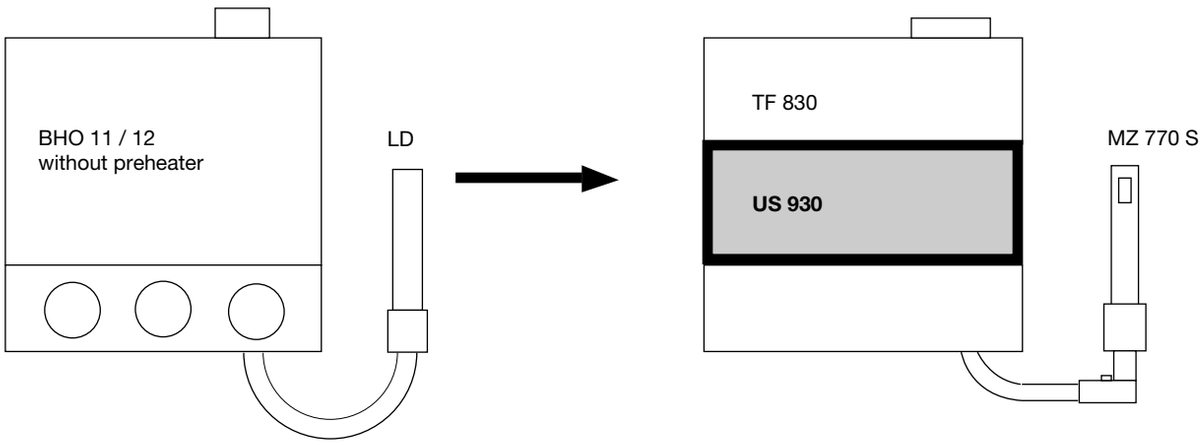
BHO 11 / 12
without preheater
LD
TF 830
US 930
MZ 770 S

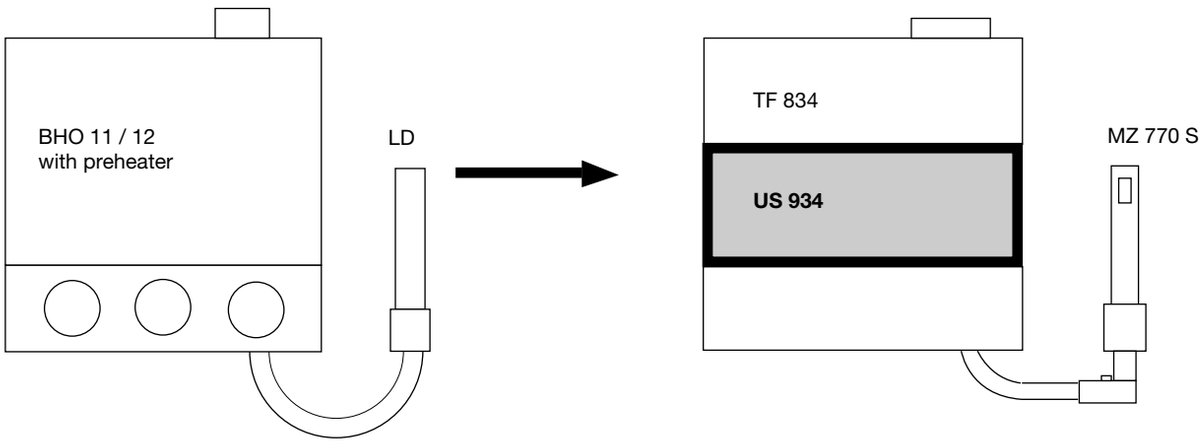
BHO 11 / 12
with preheater
LD
TF 834
US 934
MZ 770 S

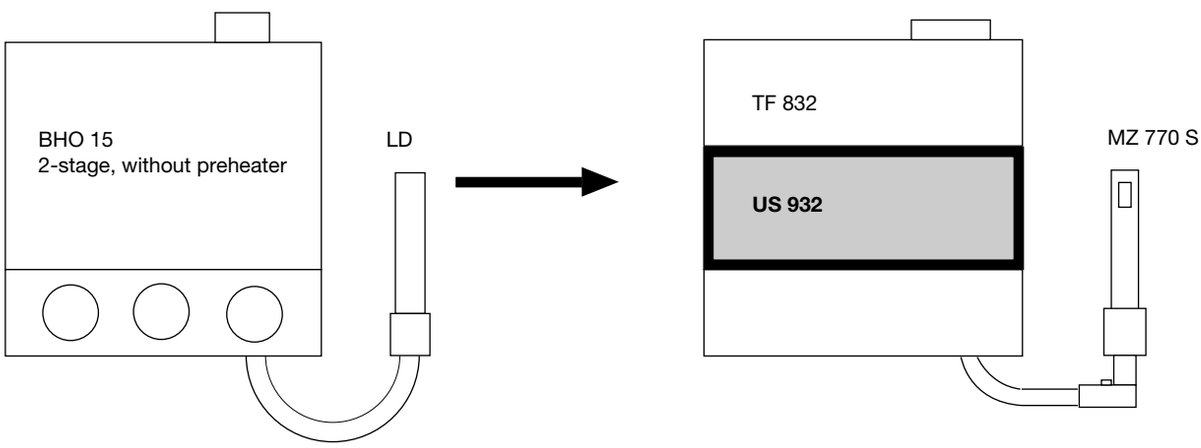
BHO 15
2-stage, without preheater
LD
TF 832
US 932
MZ 770 S

WIRING INSTRUCTION FOR US 930 / 934

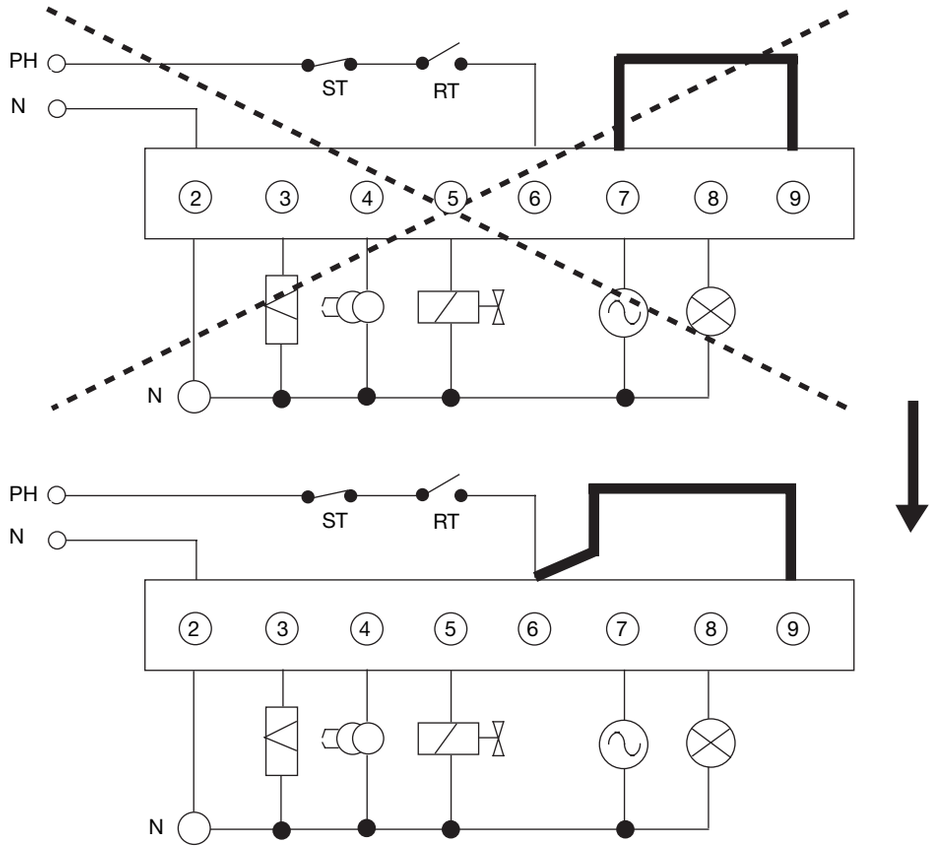

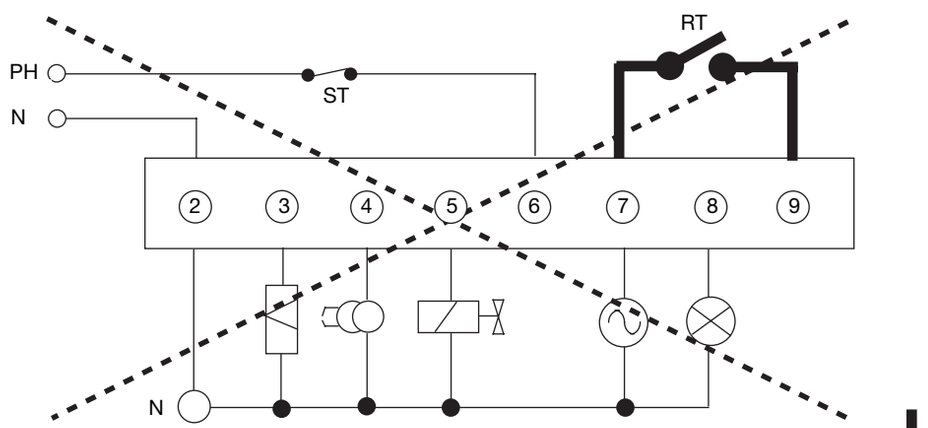

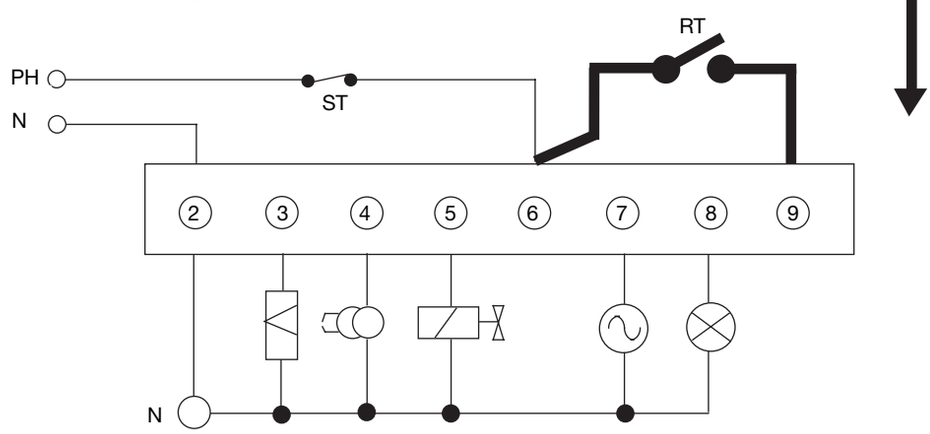

DIMENSIONS

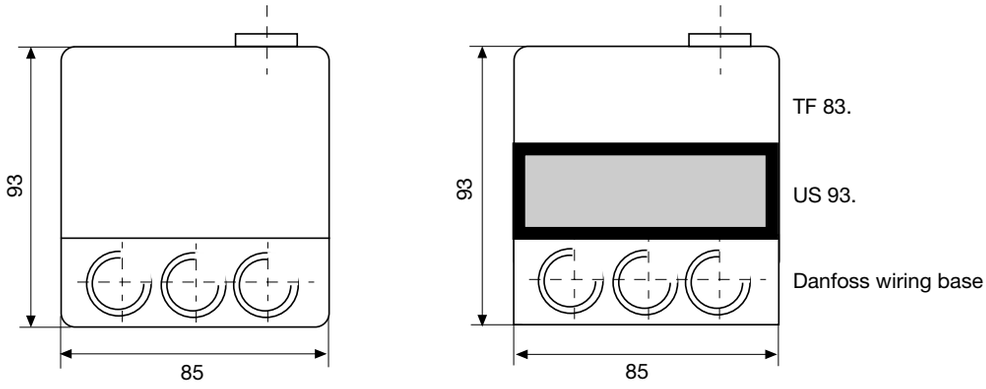

ORDERING INFORMATION

ITEM	DESIGNATION	ITEM NO.
Adapter base	Adapter base US 930	70803
or	Adapter base US 932	70801
or	Adapter base US 934	70802
Control box	Typ TF 830	02201
or	Typ TF 832	02401
or	Typ TF 834	02204
Photocell	MZ 770 S	50001
Mounting flange	Mounting flange MZ	59101
Sensor cable	Sensor cable, 2-wire, 0.5 m	7225001

The above ordering information refers to the standard version.
Special versions are also included in our product range.

Specifications subject to change without notice.

Satronic AG
Brüelstrasse 7
Postfach 324
CH-8157 Dielsdorf

Burner testing device

The indispensable aid for the oil burner fitter. Complete burners, as well as individual components, can be tested in a most simple manner. The flame signal can be checked at a glance by means of a LED luminous band. Photo current values for the individual automatic oil burner controls can be forgotten.



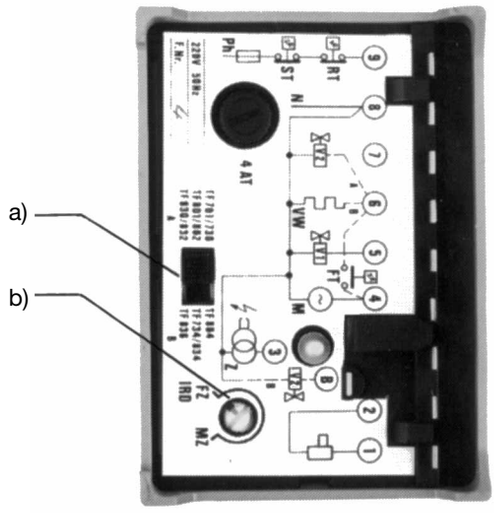

FIELD OF APPLICATION

With the help of the burner testing device UP 800, oil burners can be commissioned, tested and adjusted without any problems. The burner testing device UP 800 is hereby plugged onto the control device base in place of any Satronic automatic burner control of the TF 700 and 800 range. Despite the possibility of controlling the burner manually, the built-in flame monitoring ensures complete safety against operating mistakes.

TECHNICAL APPLICATION CHARACTERISTICS

- A built-in flame monitoring system protects against wrong manipulations and dangerous operating conditions.
- Flame signal indication by means of a 10-stage LED luminous band.
- 5 test switches for the individual burner components.
- Changeover switches for various types of flame detectors.
- Changeover switch with - or without oil pre-heating.
- Interchangeable fine protection fuse.
- Signal lamps for control thermostat and pre-heater release.

COMMISSIONING AND SERVICE / MAINTENANCE

1. Important Remarks

- Put both operating mode selector switches underneath the device into the correct position.

  a) Adjust the slide switch to correspond to the type of automatic burner control mounted on the burner.
  b) Set the position of the rotary switch to correspond to the type of flame detector used.

- Ensure that the burner is not under voltage and remove the automatic control unit.

Important
The flame detector remains in the burner!

- Plug on the burner test device UP 800 with all selector switches correctly set. All toggle switches on the front panel on "0", i.e., toggle position to the left.

- Main switch / control thermostat ON. The signal lamp on top indicates that the burner is under voltage.

- Before the UP 800 is removed, it must always be ensured that the burner is not under voltage!

2. Individual testing of the burner components

For testing individual burner components, the following switches have to be actuated:

Burner component		Switch
- Motor / pre-heater		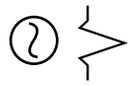
- Ignition		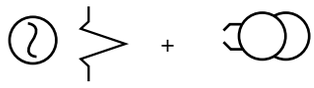
- Valve 1	test	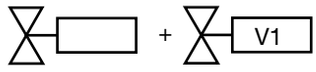
- Valves 1 + 2	test	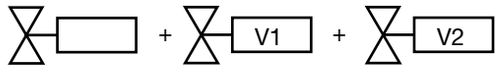

3. Functional check of burner

Commissioning by actuating the switches in the following sequence:

- Motor / pre-heater
- Valve 1
- Ignition
- Valve 2 (if present)

4. Checking the illumination level

After the burner has been commissioned, the LED luminous band has to be above the OK mark.

This setting ensures a sufficient reserve of light before the automatic burner control triggers a dark message.

To be observed

- Oil release is only possible in conjunction with ignition.
- Open position of the valve(s) after switching off the ignition only when a flame is present.
- Even a brief darkening of the flame detector results in an interruption of the oil supply. Re-starting only in conjunction with ignition.

ORDERING INFORMATION

ITEM	DESIGNATION	ITEM NO.
Burner testing device	UP 800	18605

The above ordering information refers to the standard version.
Special versions are also included in our product range.

Specifications subject to change without notice.

Satronic AG
Brüelstrasse 7
Postfach 324
CH-8157 Dielsdorf

Test-Base

A range of test bases is available to enable Service Engineers to diagnose installation problems quickly and economically



UP 711



UP 7520

TEST BASE FOR OIL BURNER CONTROL	
Type UP 711 Art. No. 18301	TF 701 / 714 / 721 / 730 / 740 TF 801 / 802 / 821 / 822 TF 830 / 840 / TTO 872
Type UP 716 Art. No. 18309	TF 704 / 734 / 804 / 834 / 836 TF 844 / TTO 876
Type UP 717 Art. No. 18310	TFI 734
Type UP 740 Art. No. 18350	TTO 750 / 810
Type UP 7501 Art. No. 18600	TMO 720

TEST BASE FOR GAS BURNER CONTROL	
Type UP 712 Art. No. 18302	TFI 712 / 812 / MMI 815
Type UP 750 Art. No. 18351	TTG 760 / TTI 790 / MMI 810 MMG 810
Type UP 760 Art. No. 18352	TTG 760 Mod. FN / MMI 811 MMG 811
Type UP 7520 Art. No. 18601	TMG 740
Type UP 7570 Art. No. 18604	TME 780
TEST BASE FOR GAS VALVE LEAK DETECTOR	
Type UP 7550 Art. No. 18602	MDP 720

To check for the correct operation of the control box and photo-cell (oil burner) the box must be plugged into the test base. The test base must then be connected to an electric supply via the mains supply lead provided. The operation of the control box will then commence. Indicator lamps provided in the test base show if the control box is working correctly. For gas burner control boxes, the UV-cell or flame rectification electrode operation can be simulated by a switch incorporated in the test base.

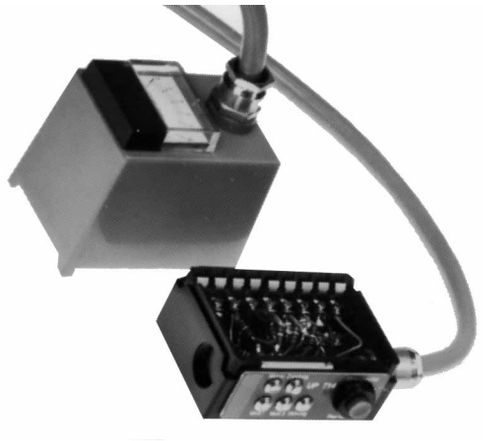

Measurement test base UP 714 M

MEASUREMENT TEST BASE UP 714 M
for TF-serie Art. Nr. 18304

This comprises a test base and plug-in unit with a millimeter to allow measurement of the photocell current. Indicator lamps are supplied in the test base, to show motor, ignition, oil valve 1, oil valve 2, circuits an lockout. A push-to-break switch is also provided for the control circuit.

MEASURMENT TEST BASE UP 770
for TTI 790, MMI and MMG 810 Art. Nr. 18353

Similar to UP 714 M. At the place of the amp-meter the plugable part contains a switch and two terminals to connect an external amp-meter (e.g. Satronic Ionimeter). Additionally a push-button-swith is mounted to switch-on the ignition. An affected ionisation current can be so easily indicated. The required measuring instrument (e. g. Satronic Ionimeter) has to be connected to the two terminals.

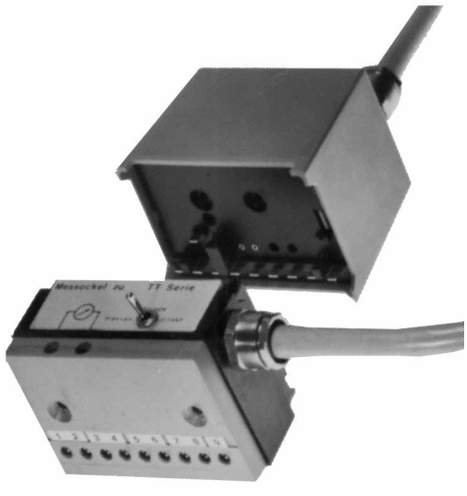

Measurement test base TT

MEASUREMENT TEST BASE TT
for TT and MM-serie Art. Nr. 18746

The test base is supplied with connection terminals having 4 mm jack points.
To measure the flamme signal current, the 2 separate jack connections must be used. A short-circuiting switch is also incorporated to bridge-out the measuring instrument.
The base is equipped with indicator lamps for fan motor, ignition trafo, valve 1 and 2 and safety-lockout. Is the burner which has to be testet-equipped with a TTO-control box, the measuring instrument has to be replaced by the supplied test-cable.

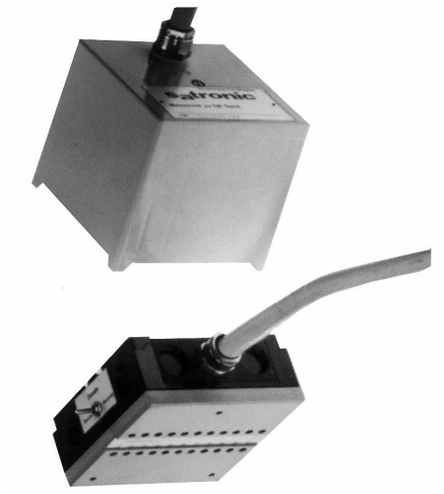

Measurement test base TM

MEASURMENT TEST BASE TM
for TM-serie Art. Nr. 18740

Connecting terminals with 4 mm jack points are provided in the base.
The measuring instrument can be bridged-out by the short-circuiting switch incorporated in the test base. Is the burner which has to be testet-equipped with a TMO-control box, the measuring instrument has to be replaced by the supplied test-cable.

We reserve the right to make technical modifications

Burner testing device

The indispensable aid for the oil burner fitter. Complete burners, as well as individual components, can be tested in a most simple manner. The flame signal can be checked at a glance by means of a LED luminous band. Photo current values for the individual automatic oil burner controls can be forgotten.



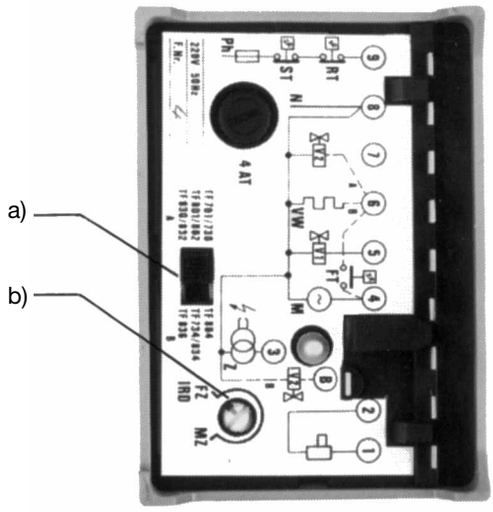

FIELD OF APPLICATION

With the help of the burner testing device UP 940, oil burners can be commissioned, tested and adjusted without any problems. The burner testing device UP 940 is hereby plugged onto the control device base in place of any Satronic automatic burner control of the TF 700, 800 and MMD range. Despite the possibility of controlling the burner manually, the built-in flame monitoring ensures complete safety against operating mistakes.

TECHNICAL APPLICATION CHARACTERISTICS

- A built-in flame monitoring system protects against wrong manipulations and dangerous operating conditions.
- Flame signal indication by means of a 8-stage LED luminous band.
- 5 test switches for the individual burner components.
- Changeover switches for various types of flame detectors.
- Changeover switch with - or without oil pre-heating.
- Interchangeable fine protection fuse.
- Signal lamps for control thermostat and pre-heater release.

COMMISSIONING AND SERVICE / MAINTENANCE

1. Important Remarks

- Put both operating mode selector switches underneath the device into the correct position.
  a) Adjust the slide switch to correspond to the type of automatic burner control mounted on the burner.
  b) Set the position of the rotary switch to correspond to the type of flame detector used.
- Ensure that the burner is not under voltage and remove the automatic control unit.

Important

- The flame detector remains in the burner!
- Plug on the burner test device UP 940 with all selector switches correctly set. All toggle switches on the front panel on "0", i.e., toggle position to the left.
- Main switch / control thermostat "ON". The signal lamp on top indicates that the burner is under voltage. Before the UP 940 is removed, it must always be ensured that the burner is not under voltage!

Attention

The UP 940 is not a safety control box! It may only be used by experienced personnel under continuous supervision!

2. Individual testing of the burner components

For testing individual burner components, the following switches have to be actuated:

Burner component		Switch
- Motor / pre-heater		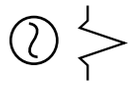
- Ignition		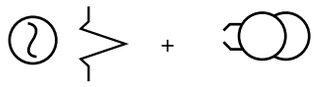
- Valve 1	test	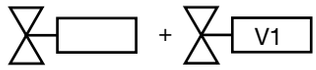
- Valves 1 + 2	test	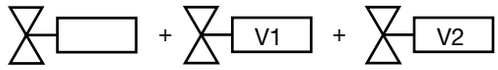

3. Functional check of burner

Commissioning by actuating the switches in the following sequence:
- Motor / pre-heater
- Valve 1
- Ignition
- Valve 2 (if present)

4. Checking the illumination level

After the burner has been commissioned, the LED luminous band has to be above the OK mark.

This setting ensures a sufficient reserve of light before the automatic burner control triggers a dark message.

To be observed

- Oil release is only possible in conjunction with ignition.
- Open position of the valve(s) after switching off the ignition only when a flame is present.
- Even a brief darkening of the flame detector results in an interruption of the oil supply. Re-starting only in conjunction with ignition.

ORDERING INFORMATION

ITEM	DESIGNATION	ITEM NO.
Burner testing device	UP 940	18606

The above ordering information refers to the standard version.
Special versions are also included in our product range.

Specifications subject to change without notice.

Satronic AG
Brüelstrasse 7
Postfach 324
CH-8157 Dielsdorf

Ammeter

For measuring the current from the probe or photo diode in gas and oil burners with ionisation, UV or photo-cell flame detection.



INTRODUCTION

The Ionimeter is particularly suitable for measuring the current from the probe or photo diode in gas and oil burners with ionisation, UV or photo-cell flame detection.

When measuring this current, the Ionimeter is connected between the burner control box and the flame detector, by way of the + and - terminals.

Care must be taken to observe correct polarity when measuring the current from UV or ionisation detectors.

These measurements are very easily carried out on Satronic burner control boxes, especially when the appropriate test baseplate is fitted.

The test baseplate is equipped with two plug sockets for connecting the leads, and a jumper switch for bridging the Ionimeter.

TECHNICAL DATA

Sensitivity ranges	10 mA 1 mA 100 mA 10 mA
Voltage	max. 250 V
Overload fuse rating	20 mA

Only high-impedance power sources should be used for calibration purposes (Ri 500 kW).

ACCESSORIES

Leather case

2 test leads with banana-type plugs

2 test clips

CONNECTING THE EARTH TERMINAL

Additionally, the earth/gound terminal can be connected to the burner earth (earth terminal on baseplate). By operating the rocker switch between the minus and earth terminals, in switch position "earth", an artificial detector probe current flows directly to the burner earth/ground and activates the flame relay.

Following this procedure, it is very easy to adjust the ionisation or UV probe to the optimal setting. Flame signal strength can be monitored continuously on the Ionimeter, and burner shutdown, caused by an interruption or a drop in the current from the detector, is not possible.

CAUTION

In this switch position, the valves remain open after the loss of the flame.

CONNECTION VARIATIONS

TF-SERIES

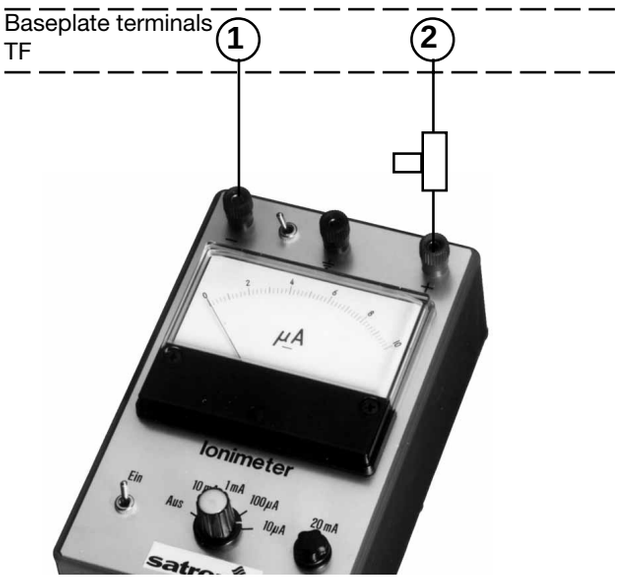

Sensitivity range: With FZ 711 G, 10 mA
With MZ 770, 1 mA, 100 mA

TMG WITH UV OR IONISATION DETECTION

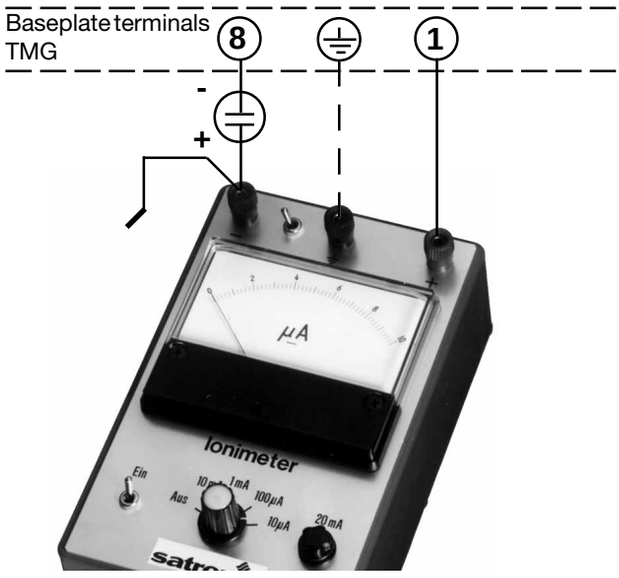

Sensitivity range: 100 mA, 10 mA

TTI/MMI/MMG WITH IONISATION DETECTION

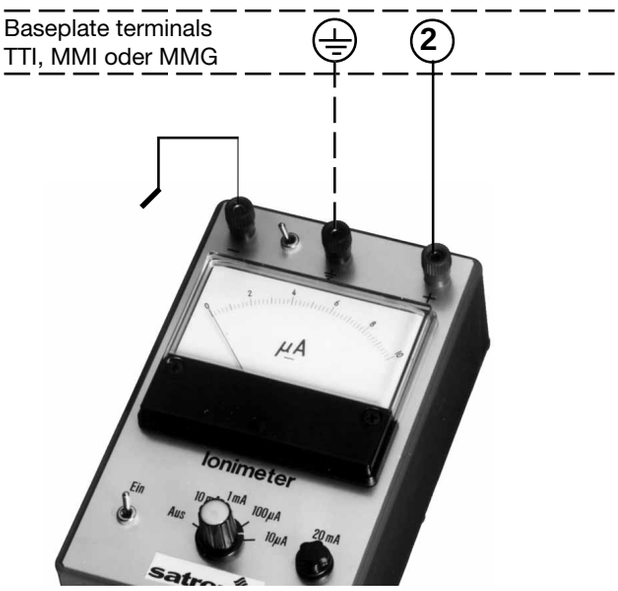

Sensitivity range: 100 mA, 10 mA

MMG WITH UV DETECTION

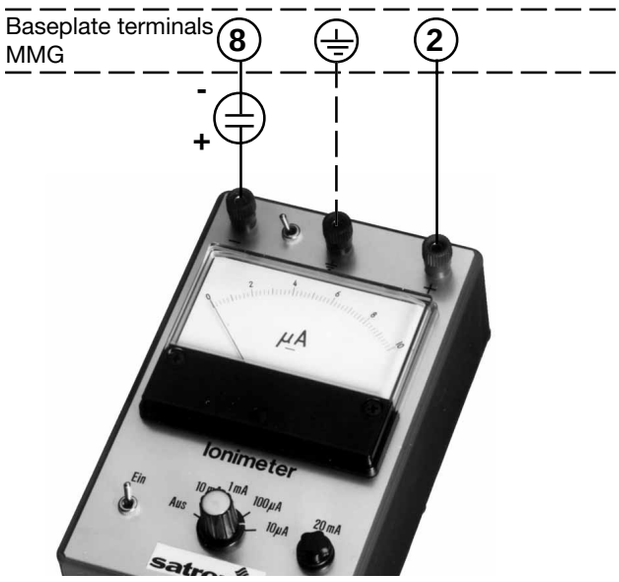

Sensitivity range: 100 mA, 10 mA

ORDERING INFORMATION

ITEM	ITEM NO.
Ionimeter	18346
Leather case with additional cable	18763

Specifications subject to change without notice

Satronic AG
Brüelstrasse 7
Postfach 324
CH-8157 Dielsdorf

Hand-held terminal

Hand-held terminal to display the lockout code and flame signal of digital burner control boxes of the series Dxx.



The hand-held terminal SatroPen is used to access the communication module „SatroCom“ of the digital burner control boxes made by satronic. In the simplest format the SatroPen displays the cause of the present lockout or during start and operation the actual flame signal as a percentage. This information allows for quick an easy fault diagnoses.

TECHNICAL DATA

Type	battery-operated hand held terminal for SatroCom
Size	130 x 23 x 18 mm
Weight	65 Gramms (incl. batteries)
Ambient temp.	0 - 40° C
Surface	resistant against oil and the usual cleaning agents
Energy supply	2 batteries type AAA, ideally alkalyne (operation with rechargeble NiCad cells is not possible)
Duration of operation	60 h at normal usage

SatroPen is a electronic precission device; careful treatment is recommended for a long usage (e.g. like a cellular phone)

For a optimized data transfer, the following notes have to be considered:

- sensor /SatroPen) and reset button (control box) have to be clean
- SatroPen is hold ideally at the reset button, the cams at the front are of help to do that
- the distance between the SatroPen and the control box should not be more than 5 cm. The axial alignement of the SatroPen and the control box are of great importance. Tilted or staggered alignement do not allow a data transfer.

OPERATION

1. insert to new alkalyne batteries of the size AAA into the SatroPen
2. apply the lockout-code label with the preferred language
3. to read the flame signal:
   - the **burner** has to be in **start- or running position**
   - switch on the SatroPen by pressing briefly the button.
     Display: – – –
   - hold the SatroPen with it’s front to or close to the reset button
   - the current flame signal is displayed.
     Display: nnn %
     a flame signal exceeding 100% is necessary for a reliable operation
   - by taking the SatroPen away from the reset button, the most recently received flame signal value is put into it’s –memory.
     Display: nnn% HOLD









4. to read the lockout codes:
   - the burner has to be in lockout position (power still applied)
   - switch on the SatroPen by pressing briefly the button.
     Display: – – –
   - hold the SatroPen with it's front to or close to the reset button
   - lockout code is displayed
     e.g. **Display: 1** ⊗
   - description of the lockout cause according the enclosed label enclosed:
     code 1 = no flame established
   - by taking the SatroPen away from the reset button, the most recently received flame signal value is put into it's memory.
     Display: 1 ⊗ **HOLD**
5. further measuring can be performed after a brief pressing of the button.
   Display: – – –
6. SatroPen switches off automatically after 10 minutes without data received

Important notes:
If the flamesignal is displayed as "< 100% " or "> 100% " in a blinking manner instead as above described, the control box in this case is of a variation which is not recognized by the SatroPen. At least it can be decided wether the flame signal is sufficient or not. For an accurate reading, a SatroPen of the newest type has to be used

On certain customized control boxes, the data communication is not enabled or coded. If the SatroPen is used on one of these control boxes, it can wether display the flame signal nor the lockout code. The display will show an "E" (error). Please consult in this case the manufacturer of that burner.

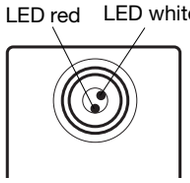

The SatroPen can exclusivly be used on digital burner controls of the series Dxx which feature an IR interface. This can be identified by:

- identification of the model on the control's label, e.g. DMG 970 **Mod.01**
- 2 LED' s below the reset button (1 red, 1 white)

For additional support about the operation and usage of the SatroPen, please contact your burner manufacturer or distributor.

REPLACEMENT OF BATTERIES

With a new set of alkalyne batteries of the size AAA, the duration of operation is approx. 60 hours (at normal usage). About 10 hours before the batteries end-of-life, a blinking symbol appears on the display. Please pay attention to the polarity symbols when inserting the batteries.

SATROCOM

All digital burner control boxes of the series Dxx feature an innovative communication facility. Detailled information about he last to lockouts, graphic display of the active burner components, the supply voltage, the flame signal and further information are displayed on a PC or a palmtop computer. In addition to this, extensive statistic analyses can be made and the data sets can be put to a database. Please contact your burner manufacturer for further information.

ORDERING INFORMATION

ITEM	DESIGNATION	ITEM NO.
Han-held terminal (without batteries, with label in D, E, F, I and NL)	SatroPen	18450

Specifications subject to change without notice.

satronic
A Honeywell Company

Satronic AG
Brüelstrasse 7
Postfach 324
CH-8157 Dielsdorf

Test-rig

**With the aid of the test-rig,
most burner control boxes can be tested
on the appropriate testbases.**

FEATURES AND DESCRIPTION

NKL - indicator lamp for mains voltage (green)
- lights, if the mains switch NS is activated and mains is supplied.

NS - mains switch on/off
- it switches all test bases together on or off.

PWS - program select switch intermittent/continuous
- on position "Intermittieren" (intermittent), all controls perform a restart after 2 resp. 4 minutes.
- on position "Dauer" (continous), all controls stop on the end of the 1st resp. 2nd program cycle (continuous test).

PEL - end-of-program indicator lamp (red)
- indicates, when PWS is set for "Dauer" (continuous) and the test program has reached its end.

FSS - flame simulation switch
- setting "normal" (normal):
  the flame signal is switched on automatically when the test program starts.
- position "Flamme aus" (flame off):
  on all control boxes, a loss-of-flame resp. a start without flame is simulated
- position "Fremdlicht" (stray light):
  on all control boxes, continuous stray light is simulated.

LWS - air proving switch simulation switch
- position "normal" (normal):
  the air proving switch is automatically controlled for those control boxes featuring such a function.
- position "LW verschweisst" (air proving switch welded):
  on all burner controls, a continuously closed air proving switch is simulated.
- position "LW unterbrochen" (air proving switch interrupted):
  on all burner controls, an interrupted air proving switch is simulated.

TEST OF BURNER CONTROLS

Preperation 1
- NS: off
- load the test bases with the appropriate controls (see page 2)
- empty bases have to be covered with the enclosed protection covers
- FSS: position "normal"
- LWS position "normal"

Preperation 2
- NS: on, all controls start. Controls which do not start now are either defective or or have to be re-set (when they are still in lockout-position). Please check the lockout indicator lamp on the reset-button of each control.
- wait until the "PEL"-indicator lights-up
- NS: position off
- reset the reference- and testbase counters
- remove those controls which are already indicated as defective. Protect their testbases with the enclosed covers
- PWS: position „intermittierend“

Testing the control boxes
- NS: on
- run the test as long as required, the program performs a restart approx. every 4 minutes.

Switching-off and check
- PWS: position "Dauer", can be selected at any time
- wait until the PEL indicator lights-up
- NS: off
- compare all testbase counters with the reference counter according to the reference table (see page 2).
  All burner controls, which testbase counters correspond with the reference counter are o.k., all others have to be considered as defective.

WARNING
Unused testbases are supplied with mains during operation. They have to be protected by using the enclosed covers.

REFERENCE TABLE FOR THE TEST-RIG

Type	Testbase	Adapterbase	Switch	Flame sensor	Reference counter	Testbase couter
TF 1-stage	Typ A		Pos. I	FZ/MZ	x	x
TF 2-stage	Typ A		Pos. I	FZ/MZ	x	2x
TFI 1-stage	Typ A		Pos. I	FZ	x	x
TFI 2-stage	Typ A		Pos. I	FZ	x	2x
TF with nozzle preheater 1-stage	Typ A		Pos. II	FZ/MZ	x	x
TF with nozzle preheater 2-stage	Typ A		Pos. II	FZ/MZ	x	2x
TTO 750/810	Typ B		Pos. I	–	x	2x
TTO 836	Typ B		Pos. II	–	x	2x
TTI 790	Typ C		Pos. I	–	x	x
TTG 760	Typ C		Pos. I	–	x	2x
TTG760 FN	Typ C		Pos. II	–	x	x
MMI 810/812	Typ C		Pos. I	–	x	2x
MMG 810	Typ C		Pos. I	–	x	2x
MMI 811	Typ C		Pos. II	–	x	x
MMG 811	Typ C		Pos. II	–	x	x
TMO high flame off	Typ A	TMO 2*)	Pos. I	FZ	x	x
TMO high flame on	Typ A	TMO 2*)	Pos. I	FZ	x	2x
TMG high flame off	Typ C	TMG 2*)	Pos. II	1*)	x	0.5x
TMG high flame on	Typ C	TMG 2*)	Pos. II	1*)	x	x
TTO 872	Typ A		Pos. I	FZ	x	2x
TTO 876	Typ A		Pos. II	FZ	x	2x
MMO 872	Typ A		Pos. I	FZ	x	2x
MMO 876	Typ A		Pos. II	FZ	x	2x
MMD	Typ A		Pos. I	FZ	x	2x

1*) = TMG 740-3 controls: the flame sensor selector on the bottom side has to be set to position "ION".

2*) = Testbase switch "Luftklappe" (air proving switch) on position "Auto".

ORDERING INFORMATION

ITEM	DESIGNATION	ITEM NO.
Test-rig	with 8 test bases	18383

The above ordering information refers to the standard version.
Special versions are also included in our product range.

Specifications subject to change without notice.

Satronic AG
Brüelstrasse 7
Postfach 324
CH-8157 Dielsdorf