MICROFLAT SERIES
TYPES C.../U T… X…

AUTOMATIC GAS BURNER CONTROL SYSTEMS FOR GAS BURNERS AND GAS BURNING APPLIANCES WITH OR WITHOUT FAN

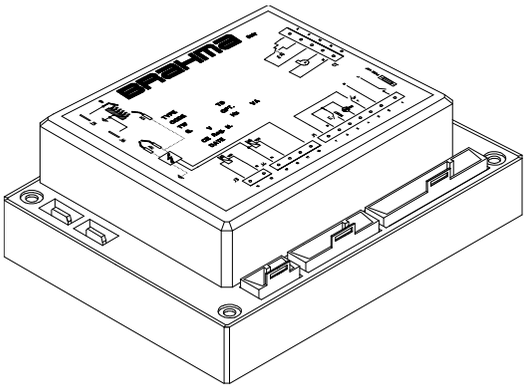

APPLICATION

This range of electronic gas burner control systems is suitable for atmospheric gas burners for non-permanent operation with or without fan in the combustion circuit.

These controls are provided with both non volatile lockout, i.e. the restart from this condition is only possible by manual reset, and volatile lockout, i.e. the restart from this condition is possible by the interruption and subsequent restoration of the mains supply.

The automatic burner control units of this series are suitable for:

- combi boilers
- heating boilers
- hot air generators
- radiant heaters
- water heaters.

Thanks to the design and variety of models, they can also be used for the automation of ovens, cookers, stoves and in gas firing appliances with atmospheric burner in general.

FEATURES

Table 1 shows the main features of this series. Other important features are:

- **CE** type certification in accordance with Gas Appliance Directive 90/396 and subsequent modifications 93/68 (see table 1);
- in compliance with EN 298 (European standard for automatic gas burner flame monitoring and control systems);
- flame monitoring based on the rectification property of the flame (ionization);
- two independent safety contacts in series on the gas valve output;
- electrical service life at max. declared loading > 250.000 operations;
- inbuilt ignition device with completely solid state design and high efficiency;
- auxiliary contact for low power ignition or main gas valve control for intermittent pilot systems type SELV, therefore suitable to control circuits type SELV - Safety Extra Low Voltage, e.g. 24V (see Table 1);
- volatile lockout in case of flame loss in running condition for type CE12U NR.

ПРОМЭЛЕКТРОНИКА / sales@prom-elec.com

TABLE 1	BURNER						OPTIONS						
	single flame	double flame	atmospheric without fan	atmospheric with fan	manual reset from lockout	electrical reset from lockout	auxiliary contact	safety thermostat provision	volatile lockout due to flame failure in running state	molex	stelvio - stocko	classification code according to 298 (2)	CE PIN
CM11U	*		*		*						*	AMCLXN	63AQ0625
CM12U		*	*		*		*(1)				*	ATCLXN	63AQ0625
CM31U	*			*	*						*	FMCLXN	63AQ0625
CE11U	*		*			*					*	AMCVXN	63AQ0625
CE12U		*	*			*	*(1)				*	ATCVXN	0694BP0669
CE12U NR		*	*			*	*(1)				*	ATVVXN	0694BP0669
CE31U	*			*		*					*	FMCVXN	63AQ0625
TM11	*		*		*						*	AMCLXN	63AQ0625
TM12		*	*		*		*				*	ATCLXN	63AQ0625
TM31	*			*	*						*	FMCLXN	0694BP0669
TE11	*		*			*					*	AMCVXN	63AQ0625
TE12		*	*			*	*				*	ATCVXN	63AQ0625
TE31	*			*		*					*	FMCVXN	63AQ0625
XM11	*		*		*			*		*		AMCLXN	63AQ0625
XM12		*	*		*		*	*		*		ATCLXN	63AQ0625
XM31	*			*	*			*		*		FMCLXN	63AQ0625
XE11	*		*			*		*		*		AMCVXN	63AQ0625
XE12		*	*			*	*	*		*		ATCVXN	63AQ0625
XE31	*			*		*		*		*		FMCVXN	63AQ0625

(1) The auxiliary contact is not type SELV (Safety Extra Low Voltage, e.g. 24 V) and therefore not suitable to control SELV circuits.

(2) Flame failure during TS causes spark restoration.

TECHNICAL DATA

Supply voltage: 230V~ 50/60Hz
on request: 110/120V~ 50/60Hz
CE12U NR 240V~ 50/60 Hz
Operating temperature range: -20℃ …. +60℃
Ambient humidity: 95% max at 40℃
Protection degree: IP 00

Timings:

– Prepurge or waiting time **(TW):** 1...60 s
– Safety time **(TS):** 3...60 s
– Drop-out time on running flame failure: < 1 s

The times given on the burner control label correspond to guaranteed values. Actual values can slightly differ from the values given, as prepurge and waiting times can be longer and safety time shorter than their nominal values.

Power consumption, at start-up:
atmospheric burner 10 VA
atmospheric fan-assisted burner 12 VA

Power consumption, running:
atmospheric burner 7 VA
atmospheric fan-assisted burner 9 VA

Contact rating: I max

– Thermostat: 3 A cos φ = 0.4
– VG1: 0.5 A cos φ = 0.4
– VG2: 0.5 A cos φ = 0.4
– Fan: 1 A cos φ = 0.4
– Alarm: 0.5 A cos φ = 1
– Auxiliary contact: 0.5 A cos φ = 0.4

Max. length of the cables of external components: 1m
Internal fuse rating: 3.15 A quick acting
External fuse rating: 2 A quick acting

Flame monitoring:

The flame detection device makes use of the rectification property of the flame (ionization). This device is not provided with any protection impedance, therefore the flame detection electrode is not safe against electric shock.

– Minimum ionization current: 1.2µA
on request: 0.5µA
– Recommended ionization current: 3 ÷ 5 times the minimum ionization current
– Max. length of the cable: 1m
– Minimum insulation resistance of cable and flame detection device to earth: ≥ 50MΩ

Max. stray capacitance of the detection probe: ≤ 1nF
Max. short circuit current: < 200µA AC

Ignition:

– Ignition voltage: 20 kV with 30pF load
– Spark repetition rate: 25 Hz
– Max. cable length: 2 m
– Recommended spark gap: 2-4 mm
– Consumption: 2,5 VA
– Spark energy: 15 mJ

Weight: 170 g

Controls for special applications:

On request it is possible to meet special requirements concerning timings, spark repetition rate, minimum ionization current and operating cycle.

CONSTRUCTION

The enclosure made of plastic material protects the control from mechanical damages, dust and dirt from the conditions of installation.

Through the use of surface mounted components, it has been possible to reduce the printed circuit board dimensions and to develop even the most complex executions with extremely compact dimensions.

A varistor protects the control from voltage transients in the mains supply.

An internal fuse protects the relays of the control box in case of short circuits on the outputs (valves, fan and lockout signal). As this fuse is not accessible, the control must be protected with an external fast blow fuse suitable to the load connected and never exceeding 2 A.

It is possible to have an internal fuse accessible from the outside by means of a plastic clip. The models with this provision are identified by the /**F** suffix.

OVERALL DIMENSIONS

The control units of the MICROFLAT series can be supplied in different executions but with the same enclosure.

The following figure (Fig. 1) shows the overall dimensions of the controls.

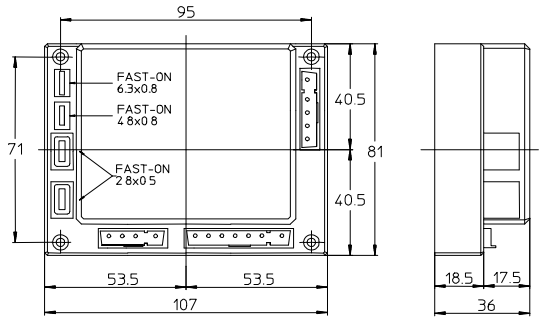

Fig.1

ACCESSORIES

Upon request the controls can be supplied with female connectors and reset button (see fig. 2); do not fit terminals and connectors of different types.

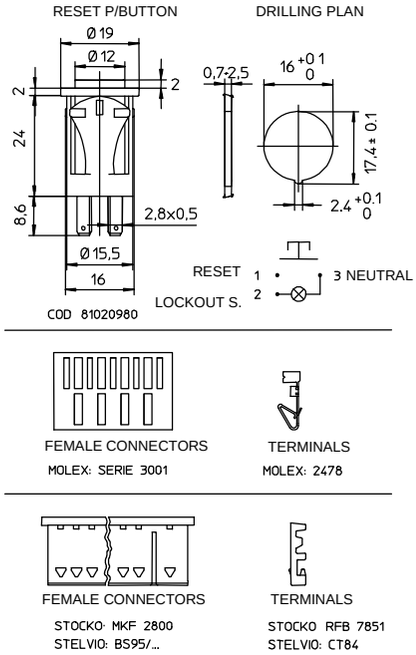

Fig.2

CONNECTION

The use of non-reversible connectors with a different number of poles makes connection easy and reliable. One way fast-on connectors of different sizes for ignition and detection electrodes enable their easy installation and replacement.

The double-output ignition device enables spark generation on one point (3a), two points (3b) or between two electrodes isolated from the metal frame of the burner (3c), as shown in Fig.3.

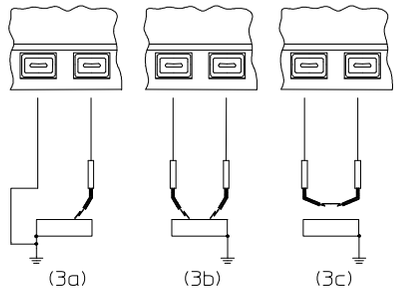

Fig.3

Regarding the connection of the control units, provisions such as strain relieves, sufficient earth terminals and neutral terminals should be available in the appliance or in external connection boxes. Fig. 4 and Fig. 5 show the various connection options available with these types of devices.

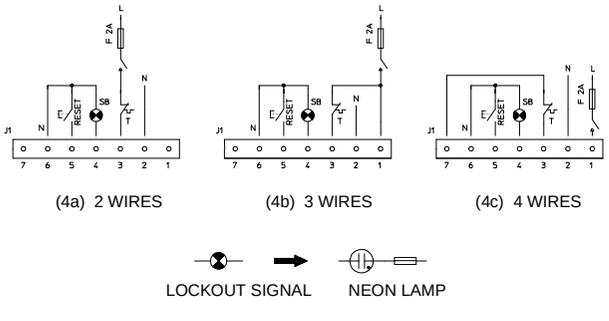

Fig.4

Connecting systems (4b) and (4c) guarantee the signalling of the lockout status and the possibility to reset the control also when the thermostat or the regulation ring is open, provided that a neon lamp is used as signal (see Fig.4). The connector J2 is prearranged for the connection of a safety thermostat that, in case of intervention, stops the supply to the gas valve VG1 and causes a safety shutdown after a delay which is the sum of waiting (prepurge) and safety times (see Fig.5).

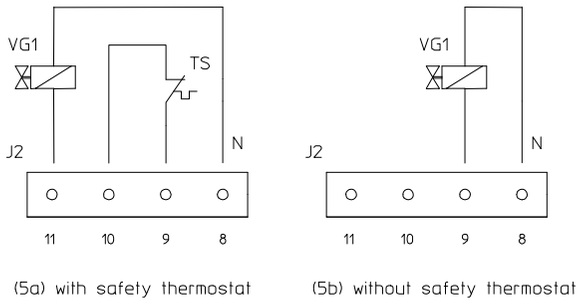

Fig.5

DIRECTIONS FOR USE

- Automatic controls are safety devices and shall not be opened. The manufacturer's responsibility and guarantee are invalidated if the control is unduly opened.
- A regulation shutdown must occur every 24 hours to enable the unit to check its own efficiency (systems for non-permanent operation).
- Connect and disconnect the unit only after switching off power supply.
- The control can be mounted in any position.
- Avoid exposing the control unit to dripping water.
- Ventilation and the lowest temperature ensures the longest life of the control.
- Make sure that the type (code and times) you are using is correct before installing or replacing the control.
- The gas appliance in which the control is installed must provide adequate protection against the risk of electric shock (at least IP20).

ELECTRICAL INSTALLATION

- The applicable national and European standards (e.g. EN 60335-1 / EN 50165) regarding electrical safety must be respected.
- **Live** and **neutral** should be connected correctly; a mistake could cause a dangerous situation, as the internal and external protection and safety devices may be ineffective in case the connection cables of thermostats and valves should lose insulation. Besides, the non-observance of **live-neutral** polarity causes a safety shutdown at the end of the safety time.

ПРОМЭЛЕКТРОНИКА / sales@prom-elec.com

- Before starting the system check the cables carefully; a wrong wiring can damage the control and compromise the safety of the application.
- The **earth** terminal of the control, the metal frame of the burner and the **earth** on the mains supply must be well connected.
- Take great care while connecting the lockout signal and the reset push-button: a reversed connection can damage the control.
- Avoid placing the detection cable close to power or ignition cables.
- Use a heat resistant detection probe and cable, well insulated to **earth** and protected from possible moisture or water in general.
- Use an ignition cable as short and straight as possible and keep it far from other conductors to reduce the emission of electromagnetic interference (max. length <2m and insulation voltage >25kV).

In case of **live-neutral** network with unearthed **neutral** or **live-live** network (with centre of the star not earthed) the control can operate correctly by means of an inbuilt resistor. Anyway, with this type of network it is advisable to use our step-up transformer type AR1.
Any leakage between **live** and **earth** can reduce the voltage on the detection electrode until it causes the lockout of the control.

CHECKING AT START-UP

Always check the control before the first start and also after any replacements or a long period of non-operation of the system. Before any ignition attempt make sure that the combustion chamber is free from gas. Then make sure that:

- if the starting attempt occurs without gas supply, the control performs lockout at the end of the safety time;
- when stopping the gas flow (while the control is in running state), the supply to the gas valve(s) is interrupted within 1 second and, after a recycling, the control proceeds to lockout. The control type CE12U NR performs volatile lockout within 1 second;
- the operating cycle and timings correspond to the ones declared for the type of device you are using;
- the level of the flame signal is high enough (see Fig.6 for the measuring test);
- the ignition probes are adjusted in a stable way for a spark gap between 2-4 mm;
- the intervention of adjusters, limiters or safety devices causes a safety shutdown according to the type of application.

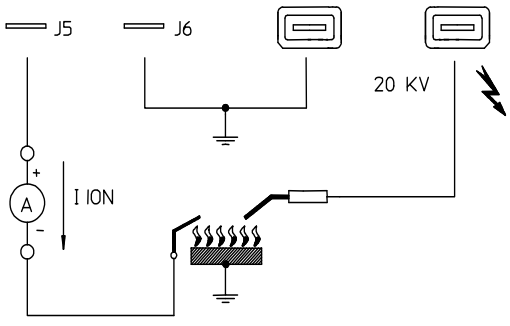

Fig.6

OPERATION

At every start the control unit proceeds to a self-checking of its own components. During the prepurge or waiting time (TW) the internal circuit makes a test of the flame signal amplifier. Extraneous light or fault in the amplifier leading to flame simulation prevent the control from starting.
In the types with fan control, before the beginning of the prepurge time, the air pressure switch contacts are checked to prove their "no air flow" state.
Only if the test is positive is the fan started, and with the air pressure switch in "air flow" state, the prepurge time begins.
At the end of the waiting or prepurge time, the gas valve VG1 is energized and the ignition device is operated. In this way, the safety time TS begins.
If a flame is detected during the safety time, the ignition device is inhibited and, in some models, the independent auxiliary contact or the first valve control switch from "off to "flame-on" position.
On the contrary, if the control does not detect any flame signal during the safety time, at the end of TS the unit proceeds to lockout, the gas valve VG1 and the ignition device are switched off, while the lockout signal output is supplied.
Flame failure during the safety time causes the ignition device to be re-activated within one second.
The attached diagrams are useful to understand how each control operates.

RESETTING THE CONTROL UNIT

Controls with manual reset (non volatile lockout)

When a control has gone to lockout, in the versions with manual reset, an interval of 10 seconds should be allowed before attempting to reset the control unit; if this time is not observed, the control may not reset correctly.

Controls with electrical reset (volatile lockout)

In the versions with volatile lockout, instead, the restart from the safety shutdown condition can only be accomplished by the interruption of the mains supply and it subsequent restoration.
These types of burner control units are not provided with independent manual reset function. The application of these types of controls is therefore restricted to only those appliances where resetting by switching off the heat demand is allowed by European standards.
In general, the reset push-button must be placed in sight and in close proximity to the appliance. Resetting must occur by means of a conscious manual action and not by means of any automatic devices such as thermostats or timers.
Please note that it is allowed to combine the reset push-button together with the main switch in the appliance. In this case, an alarm light will have to be installed too.

WIRING DIAGRAMS

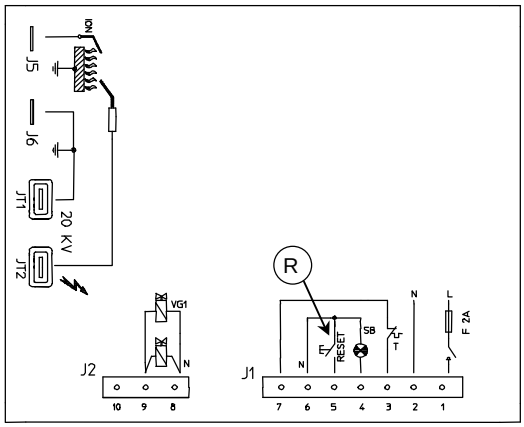

TYPE CM11U – CE11U

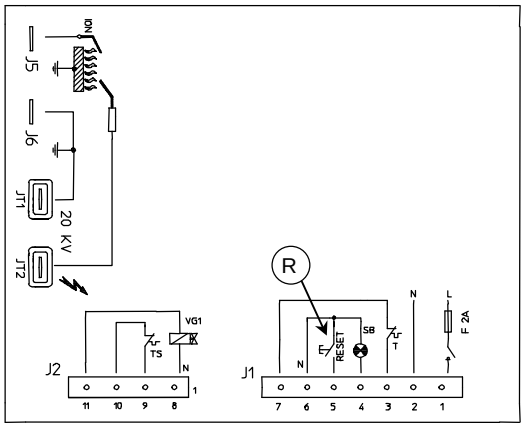

TYPE TM11 – TE11 – XM11 – XE11

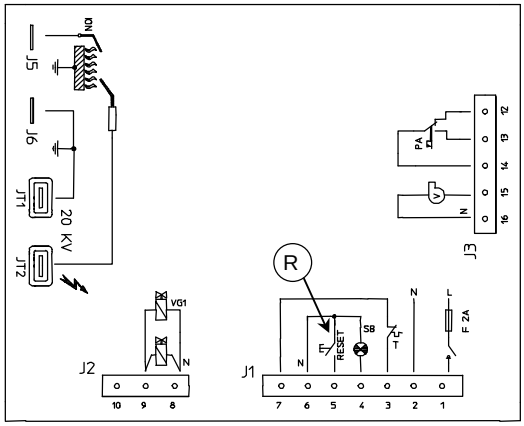

TYPE CM31U – CE31U

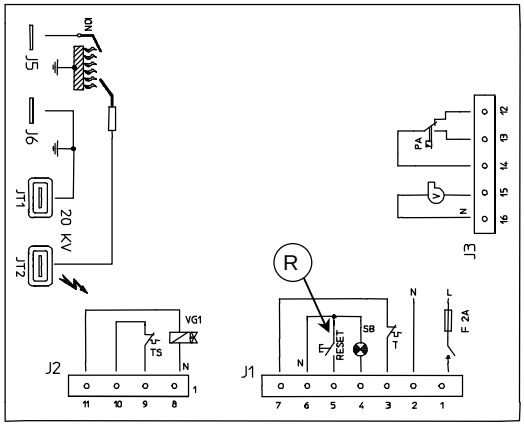

TYPE TM31 – TE31 – XM31 – XE31

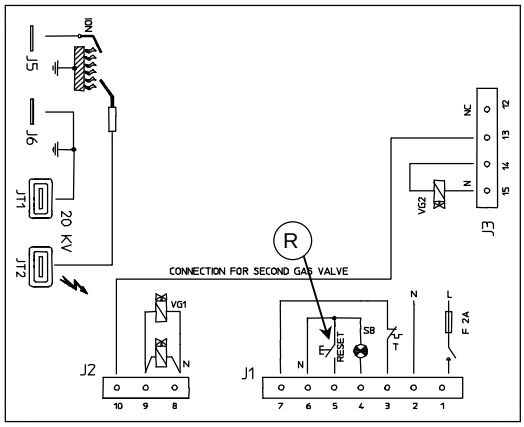

TYPE CM12U – CE12U – CE12U NR

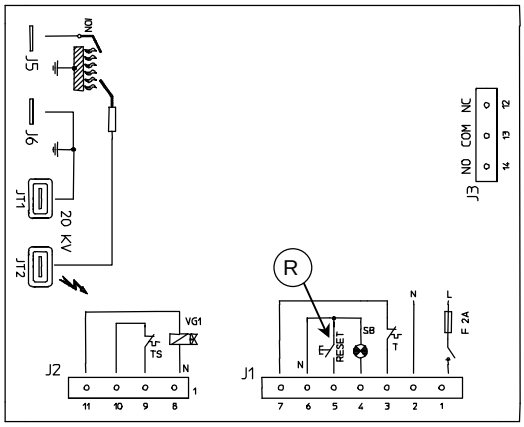

TYPE TM12 – TE12 – XM12 – XE12

T	V	PA	F		SB	VG1	VG2	TS
THERMOSTAT	FAN	AIR PRESSURE SWITCH	FUSE	BURNER	LOCK-OUT SIGNAL	FIRST GAS VALVE	SECOND GAS VALVE	SAFETY THERMOSTAT

REMARKS:

– The limit thermostat must to be wired in series to the live.

– The reset push-button Ⓡ must be connected in the versions with manual reset (non volatile lockout).

OPERATING CYCLES

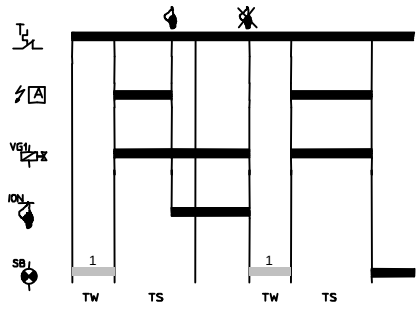

TYPE CM11U – CE11U

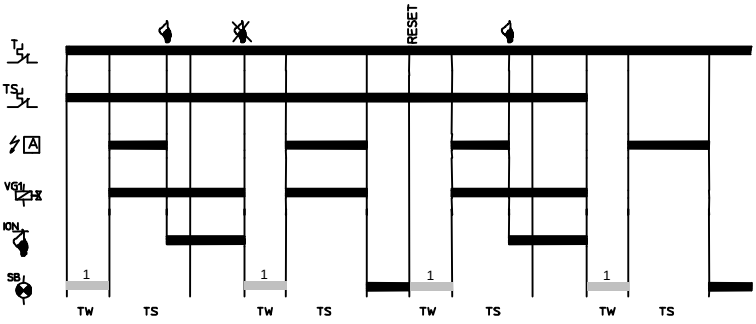

TYPE XM11 – XE11

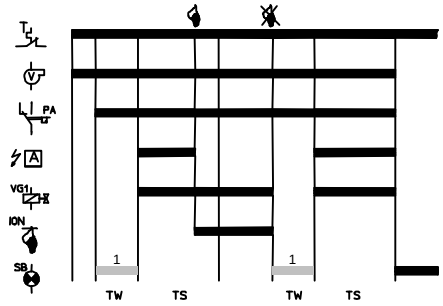

TYPE CM31U – CE31U

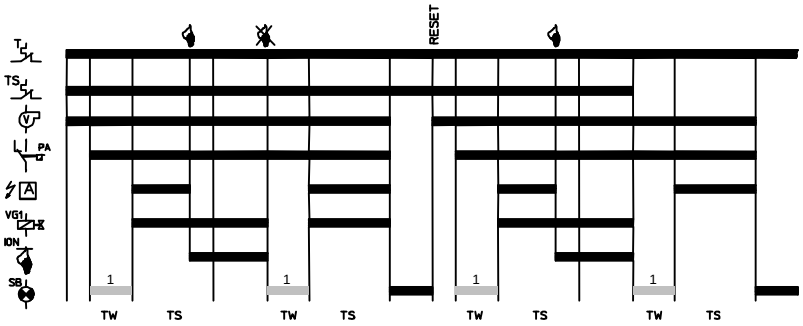

TYPE TM31 – TE31 – XM31 – XE31

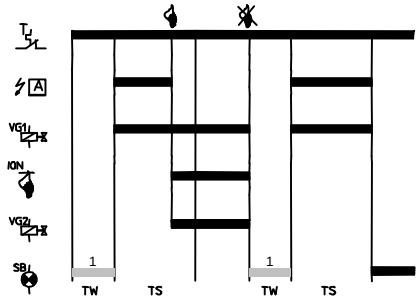

TYPE CM12U – CE12U

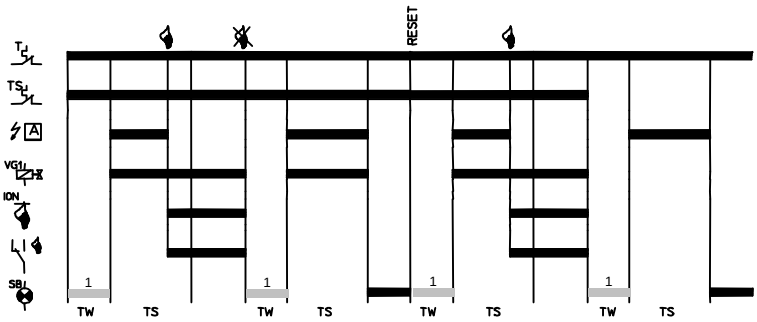

TYPE TM12 – TE12 – XM12 – XE12

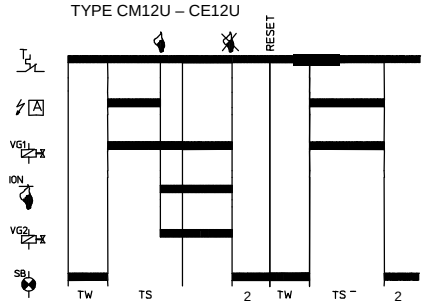

TYPE CE12U NR

THERMOSTAT	FAN	AIR PRESSURE SWITCH	IGNITER	FLAME SIGNAL	LOCKOUT SIGNAL	FIRST GAS VALVE	SECOND GAS VALVE	AUXILIARY CONTACT	SAFETY THERMOSTAT

REMARKS:

1. In the versions with volatile lockout, the lockout signal is activated during the prepurge or waiting time too.
2. Flame signal loss in running condition causes a volatile lockout.

BRAHMA S.p.A.
Via del Pontiere, 31
37045 Legnago (VR)
Tel. +39 0442 635211 - Telefax +39 0442 25683
http://www.brahma.it
E-mail: brahma@brahma.it

11/06/07 Subject to amendments without notice