EURO-OIL CONTROLS SERIES 10

AUTOMATIC OIL BURNER CONTROL SYSTEM

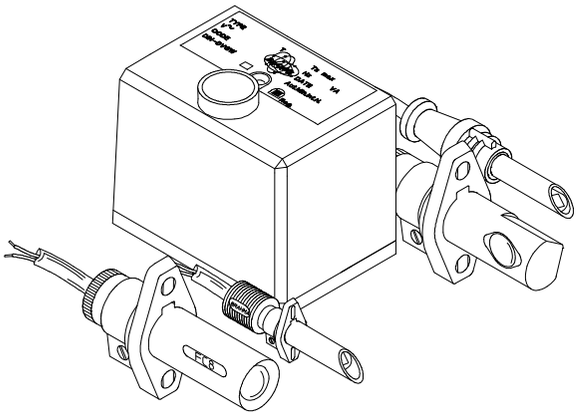

APPLICATION

This range of electronic oil burner controls has been specifically designed for oil burners for non permanent operation.
The automatic burner controls of this series are suitable for:

- monobloc oil burners;
- power washers;
- warm air generators;
- steam boilers;
- kilns.

Due to the technical and structural characteristics and to the variety of models they can be used for the automation of cookers and oil burner operated appliances for domestic and industrial applications.

FEATURES

Table 1 shows the main features of this series.
Other important features are:

- for non permanent operation;
- for fuel throughput < 30 kg/h (TS_{MAX} = 10s) or fuel throughput from 30 to 100 kg/h (TV_{min} = 15s e TS_{MAX} = 5s);
- in accordance with the European standard concerning monobloc oil burners and control systems DIN EN 230:2005;
- in compliance also with the standard DIN EN 13842:2004-10 for warm air generators (WLE, versions with TV = 20s e TS = 5s);
- two independent safety contacts for oil valve control;
- electrical service life at max load >250.000 operations;
- simple wiring and installation.

Table 1

Type	*Single flame*	*Dual flame*	*Pre-heater*	*Normal operation in case of pre-heating thermostat opening*	*On-board reset*	*External remote reset*	*Flame detectors FC7/* FC8/**	*Flame detectors FC11/* FC13/* FC14/* FC14L/**	*Classification code according to EN 230*	*Certificate N°.*
GR1	*		(1)		*	*		*	FMCLXN	**09 07 91305 002**
GR1/Z	*		*	*	*	*		*	FMCLXN	**09 07 91305 002**
GR2		*	(1)		*	*		*	FTCLXN	**09 07 91305 003**
G22	*		(1)		*		*		FMCLXN	**09 07 91305 001**
G22/Z	*		*	*	*		*		FMCLXN	**09 07 91305 001**
GF2		*			*		*		FTCLXN	**09 07 91305 001**
OR1	*		(1)		*			*	FMCLXN	**09 07 91305 002**
OR1/Z	*		*	*	*			*	FMCLXN	**09 07 91305 002**
OR2		*			*			*	FTCLXN	**09 07 91305 003**
OR3/B		*	*		*			*	FTCLXN	**09 07 91305 003**

NOTE:
1. this option is possible only by an external connection.

ПРОМЭЛЕКТРОНИКА / sales@prom-elec.com

TECHNICAL DATA

Supply voltage:	220÷240V~ @ 50/60Hz
On request:	110÷120V~ @ 50/60Hz
Operating temperature range:	-20℃ ÷ +60℃
Ambient humidity:	95% max @ 40℃
Protection degree:	IP 40
Times:	
- Prepurge time (TV)[1]:	1,5 / 10 / 20 / 30 / 40 s
- Safety time (TS)[1]:	5 / 10 s
- Dropout time on running flame failure:	< 1 s
Power consumption:	
- for supply voltage of 220÷240V_{AC}:	8 VA
- for supply voltage of 110÷120V_{AC}:	4 VA
Contact rating:	Imax
- Room thermostat (T):	5,0 A cosφ > 0,4
- Pre-heater thermostat (TC)[2]:	4,5 A cosφ > 0,4
- Pre-heater (RISC):	0,5 A cosφ = 1,0
- Fan (MB):	2,0 A cosφ > 0,4
- Ignition transformer (TR):	2,0 A cosφ > 0,4
- First valve (EV1):	0,5 A cosφ > 0,4
- Second valve (EV2):	0,5 A cosφ > 0,4
- Alarm (SB):	1,0 A cosφ = 1,0
Maximum length of external components cables:	
- Thermostats (T - TC):	20 m
- Reset and alarm (RE - SB):	10 m
- All the others:	1 m
Switch-off voltage[3]:	
- for supply voltage of 220÷240V_{AC}:	85V_{AC}
- for supply voltage of 110÷120V_{AC}:	45V_{AC}
Internal fuse rating:	6.3 A delayed
External fuse rating:	6.3 A fast blow
Weight (including socket):	132 g

NOTES

1. The times given on the burner control label correspond to the values guaranteed. The actual values slightly differ from the values given, as prepurge time can be longer and safety time shorter than their nominal values.
2. In case of presence of the pre-heater.
3. Under this voltage during operating the valve EV1 is de-energized.

CONTROLS FOR SPECIAL APPLICATIONS

On request it is possible to meet special requirements concerning times and operating cycles.

CONSTRUCTION

The particular construction and the use of the surface mounted components allow to have reduced overall dimensions.

The enclosure made of plastic material protects the control from possible damages resulting from crashes, incautious opening, dust and contact with the external environment.

A varistor protects the control from voltage transients on the electric network.

An inbuilt fuse protects the internal relays of the control box in case of short circuit on the outputs (valves, ignition transformer, motor and lockout signal).

OVERALL DIMENSIONS

The following figure (Fig.1) shows the overall dimensions of the control.

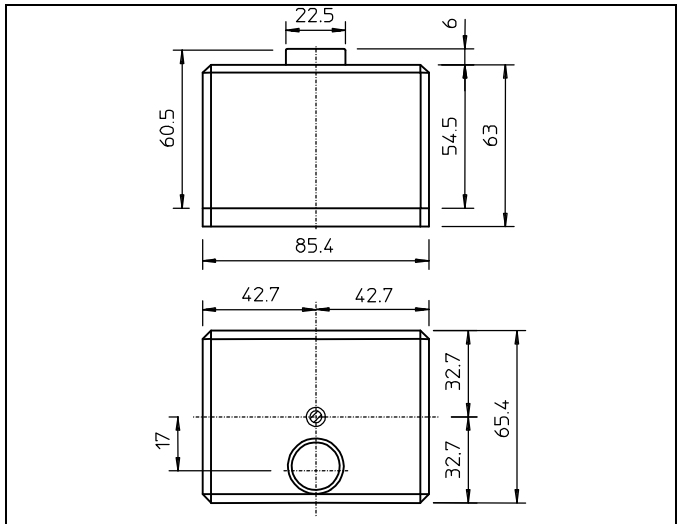

Fig. 1 – Overall dimensions

CONNECTION

For the connection of the external components the control can be fitted either with socket type N (see Fig. 2), provided with a screw terminal board which allows a simple and safety connection.

To fix the sockets it is advisable to use screws type M4. To fix the control to the socket use the pin supplied with the control box.

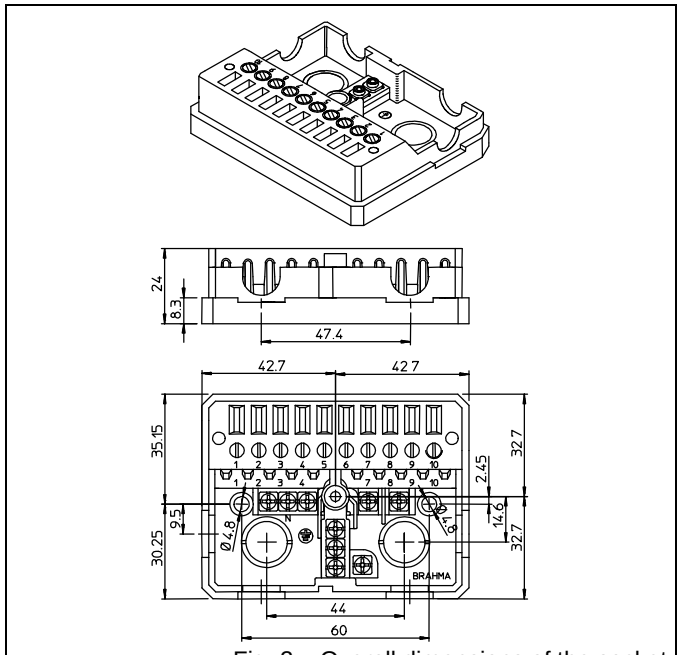

Fig. 2 – Overall dimensions of the socket

For the connection of the external components refer to ht paragraph "CONNECTION DIAGRAM".

ACCESSORIES

The following data are useful to choose the most suitable flame detector for the application and the control box used.

- *Flame detector for EURO-OIL type GR1, GR1/Z, GR2, OR1, OR1 /Z, OR2, OR3 /B*

View	Series	Type[4]	Range [lux]
frontal / lateral	FC11	/N (black)	1,5 ÷ 6,5
		/A (cyan)	1,5 ÷ 3,0
frontal / lateral	FC13	/R (red)	1,5 ÷ 6,5
		/A (cyan)	1,5 ÷ 3,0
frontal / lateral	FC14	/R (red)	1,5 ÷ 6,5
		/A (cyan)	1,5 ÷ 3,0
frontal / lateral	FC14L	/R (red)	1,5 ÷ 6,5
		/A (cyan)	1,5 ÷ 3,0

- *Flame detector for EURO-OIL type G22, G22/Z, GF2*

View	Series	Type[4]	Range [lux]
lateral	FC7	/R (red)	1,5 ÷ 5,5
		/A (cyan)	1,5 ÷ 3,0
		/V (green)	3,0 ÷ 5,5
frontal	FC8	/R (red)	1,5 ÷ 5,5
		/A (cyan)	1,5 ÷ 3,0
		/V (green)	3,0 ÷ 5,5

NOTE

4. The suffix indicates the colour of the photocell enclosure.

It is also possibile to use the UV sensor BRAHMA type FD1/N or FD2/N (frontal or lateral viewing) that is specifically designed for burners with blue flame.
The following figures show the types and fixing systems of the available flame detectors.
To fix the flame detector screws diameter 4 are suggested.

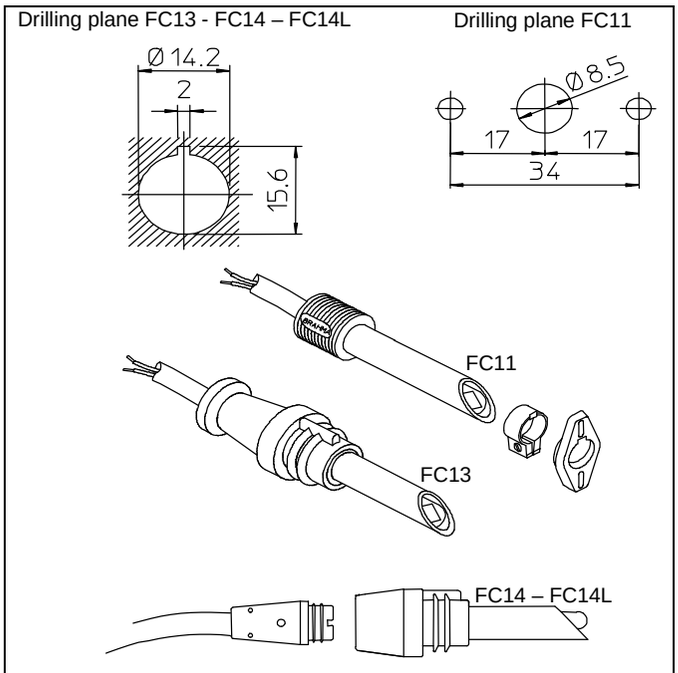

Fig. 3 – Types and fixing systems for FC11, FC13 and FC14

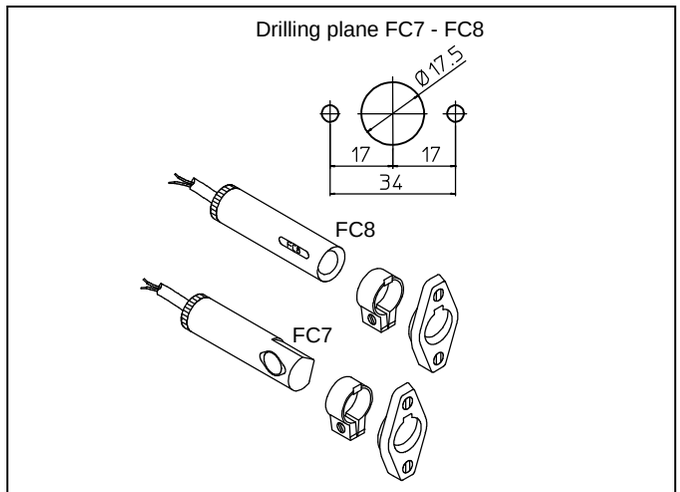

Fig. 4 – Types and fixing systems for FC7 and FC8

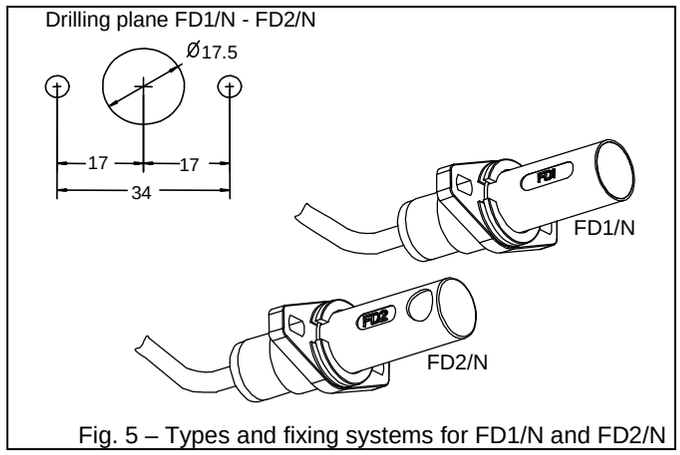

Fig. 5 – Types and fixing systems for FD1/N and FD2/N

Cable holders and core hitches

Cable holders and core hitches can be fitted on the sides of the enclosure and the connecting sockets. These accessories can be supplied upon request (see Fig.6).

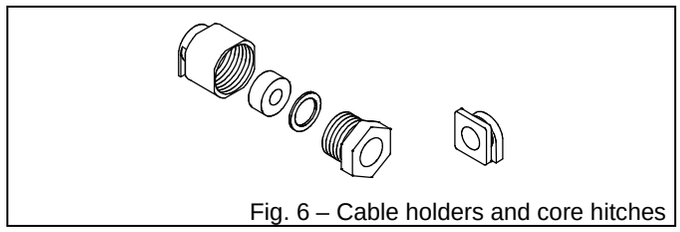

Fig. 6 – Cable holders and core hitches

DIRECTIONS FOR USE

- Automatic controls are safety devices and must not be opened. The manufacturer's responsibility and guarantee are invalidated if the control is incautiously opened.
- For safety reasons a regulation shutdown must occur every 24 hours (systems for non permanent operation).
- The control can be connected and disconnected only without the main power.
- The control can be mounted in any position.
- Avoid exposing the control unit to dripping water.
- Ventilation and the lowest temperature ensure the longest life of the control.
- Make sure that the type (code and times) you are using is correct before installing or replacing the control.

ПРОМЭЛЕКТРОНИКА / sales@prom-elec.com

ELECTRICAL INSTALLATION

- The applicable national and European standards (e.g. EN 60335-1 / EN 60335-2-102) regarding electrical safety must be respected.
- **Live** and **neutral** should be connected correctly; a mistake could cause a dangerous situation, as the internal safety devices can be ineffective in case the connecting wires of thermostats and valves are not isolated.
- Before starting the control unit check the cables carefully. Wrong connections can damage the control and compromise the safety of the application.
- The earth terminal of the control, the metal frame of the burner and the earth of the electric system must be well connected.
- Avoid putting detection cables close to power or ignition cables.
- Protect the control with a fast fuse suitable to the load connected and never exceeding 6.3A.
- The appliance in which the control is installed must provide adequate protection against the risk of electrical shock.

CHECKING AT START

Always check the control before the first start and also after any replacement or a long period of non operation of the system.

Before any ignition attempt make sure that the combustion chamber is free from oil. Then make sure that:

- if the starting attempt occurs with the flame detector obscured the control performs a lockout after safety time;
- if start up takes place with extraneous light the control performs a lockout within 10 seconds;
- when the flame detector is obscured in running position, supply to the oil valves is interrupted within 1 second and after a recycling the control proceeds to lockout;
- the intervention of limiters or safety devices cause a safety shutdown according to the application;
- operating times and sequence are suitable to the control box used.

OPERATION

At every start the control unit supplies the burner motor and the ignition transformer and proceeds to a self-checking of its own components. During the prepurge time TV the internal circuit makes a test of the flame signal amplifier circuit. Extraneous light or a fault in the amplifier cause the lockout of the control within 10 seconds.

At the end of prepurge time the control output of the first oil valve is energized; if a flame signal is detected at the end of safety time, the control unit deenergizes the ignition transformer and goes to running position.

At the end of safety time in the controls with two flame levels the ignition transformer is deenergizes and the second oil valve is supplied. If no flame signal is detected during safety time, the control goes to lockout, the control outputs of the valve, the ignition transformer and the burner motor are switched off while the lockout signal is supplied.

The controls prearranged for the use of an oil pre-heater supply the pre-heater when the ambient thermostat and/or the boiler (T) switches on. In this way the starting sequence begins when the pre-heater thermostat (TC) switches on.

The thermostat opening does not cause the burner shutdown: if the pre-heater is used (if possible), the thermostat opening causes the repetition of the starting sequence after the heating stage (RISC) of the pre-heater; if the pre-heater is no used the starting sequence is repeated when the ambient thermostat and/or the boiler (T) switches on.

In case of device with option "/Z" (EURO-OIL type GR1, G22 and OR1) the pre-heater thermostat opening during running state is not considered.

The attached diagrams are useful to understand how each control operates.

Abnormal operation - Extraneous light

All control boxes of this series perform a lockout within 10 seconds.

RESET OF THE CONTROL

When a control has gone to lockout, a delay of 10 seconds should be considered before attempting to reset the control unit; if this time is not observed the control may not reset.

TESTING THE FLAME SIGNAL

It is extremely important to test the flame signal level before having the burner operate.

Arrange one cable connected to each terminal of the photoresistor as shown in figure 7. These cables should be accessible when the control is mounted on the socket; then, with the burner in running position, the voltage between terminals must be < 0,8V.

This value guarantees a safe operation; it corresponds to a light intensity 50% beyond the limit value (about 1,4V). In case the tested voltage is higher, try to better orientate the photocell or to clean it.

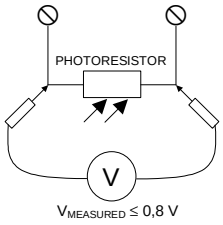

Fig. 7 – Testing the flame signal during running position

CONNECTION DIAGRAMS

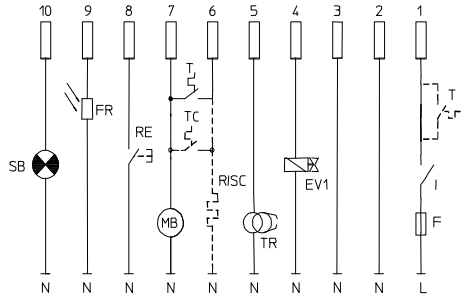

TYPE GR1

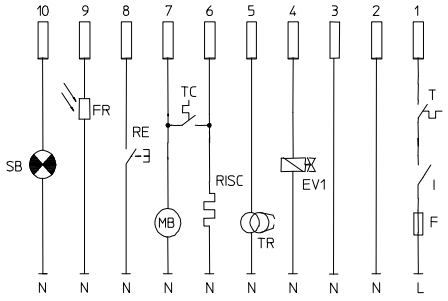

TYPE GR1/Z

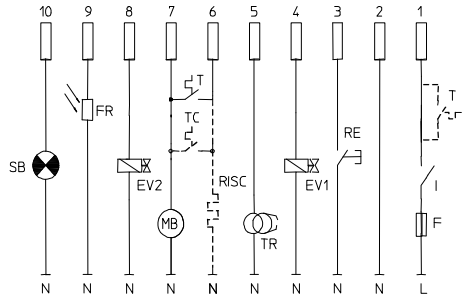

TYPE GR2

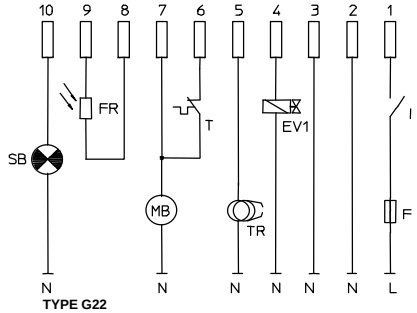

TYPE G22
TYPE OR1

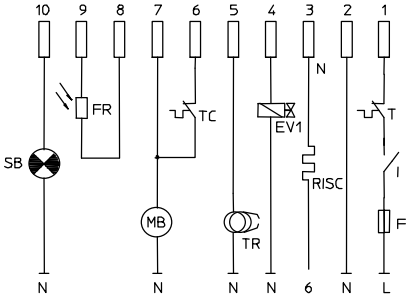

TYPE G22 – Application with pre-heater
TYPE OR1 – Application with pre-heater
TYPE G22/Z
TYPE OR1/Z

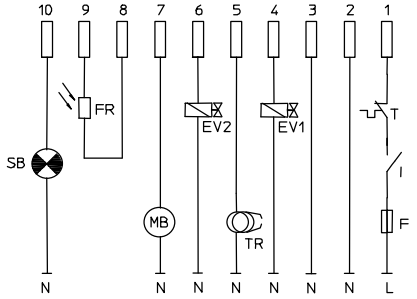

TYPE GF2
TYPE OR2

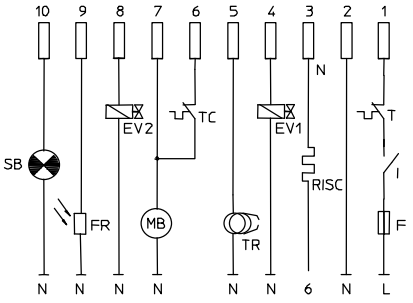

TYPE OR3/B

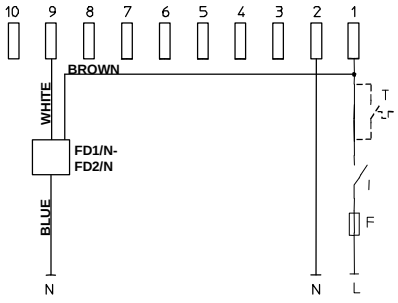

CONNECTION WITH A FLAME SENSOR BRAHMA type FD1/N - FD2/N



Main switch | Room thermostat | Burner motor | Flame detector | Pre-heater thermostat | Lock-out signal | First oil valve | Second oil valve | Pre-heater | Ignition transformer | External remote reset | Fuse

OPERATING CYCLES

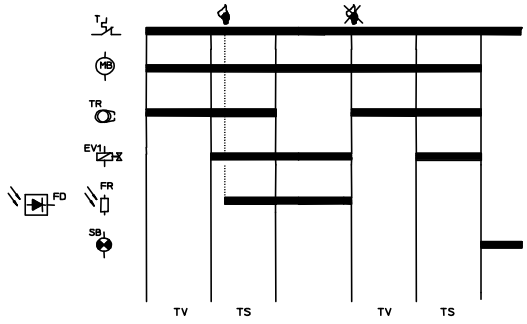

TYPE GR1 – G22 – OR1

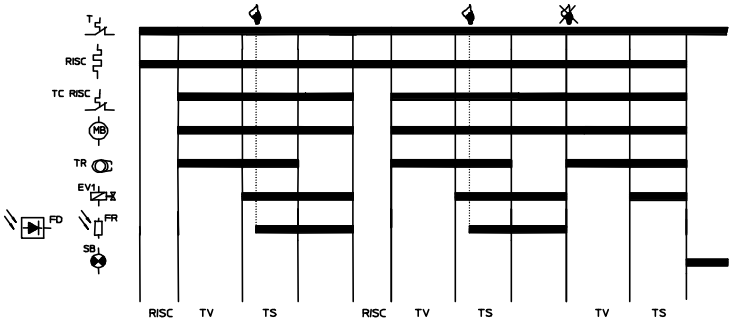

TYPE GR1 – G22 – OR1
(WITH PRE-HEATER)

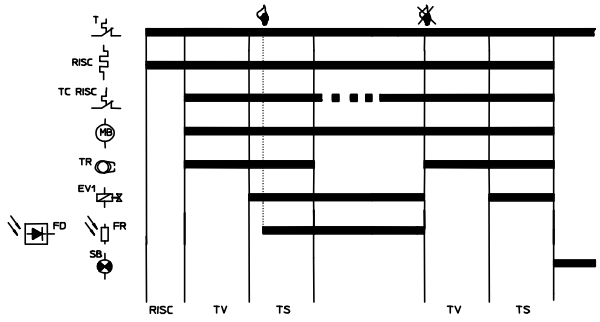

TYPE GR1/Z – G22/Z – OR1/Z

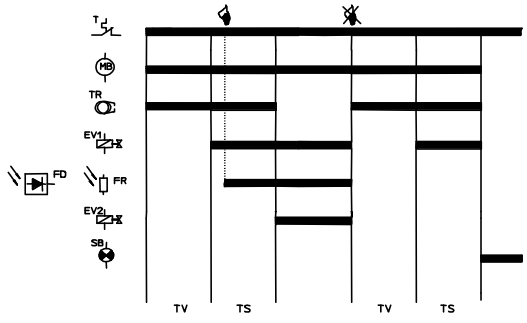

TYPE GR2 – GF2 – OR2

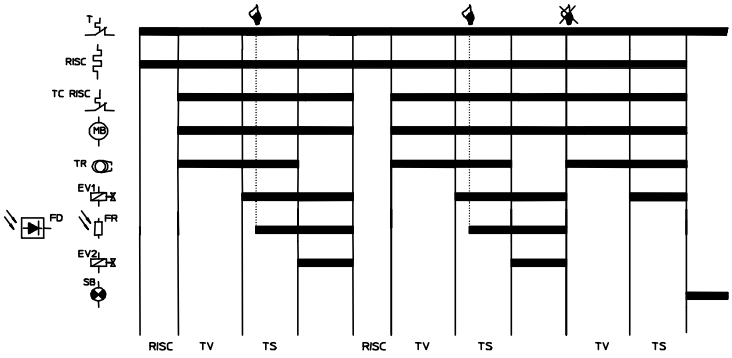

TYPE GR2 (WITH PREHEATER) – OR3/B

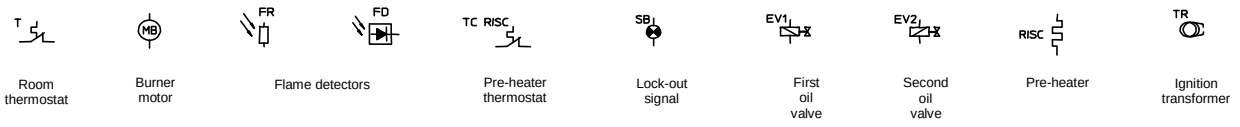

ATTENTION -> Company Brahma S.p.A. takes no responsibility for any damage resulting from Customer's tampering with the device.

BRAHMA S.p.A.
Via del Pontiere, 31
37045 Legnago (VR) - Italy
Tel. +39 0442 635211 – Fax +39 0442 25683
http://www.brahma.it
E–mail: brahma@brahma.it

11/06/07 Subject to amendments without notice