DIGITAL MICROFLAT SERIES
TYPES DM/E.. DTM/E..

MICROPROCESSOR BASED AUTOMATIC CONTROL SYSTEMS FOR GAS BURNERS AND GAS BURNING APPLIANCES

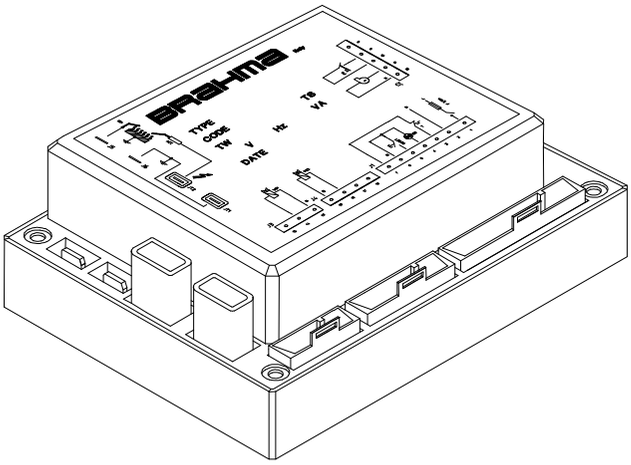

Application

The microprocessor based burner control systems belonging to DIGITAL MICROFLAT Series has been specifically designed for atmospheric gas burners for intermittent operation (systems for non-permanent operation), with or without fan in the combustion circuit.
These systems are available with non-volatile lockout, i.e. a restart from the safety shutdown condition can only be accomplished by a manual reset of the system, or with volatile lockout, i.e. a restart from safety shutdown condition can be accomplished by the interruption and subsequent restoration of mains supply (not by heat demand device switching).
The automatic burner control units of this series are suitable for:
-combi boilers;
-heating boilers;
-warm air generators;
-radiant heaters;
-water heaters.
The DIGITAL MICROFLAT Series maintains the main features and reliability of previous MICROFLAT Series, but thanks to flexibility of microprocessor technology adds several facilities regarding times and operational modes. For instance, the systems of this series are suitable to be used in gas-fired air heaters according to EN 525, EN 1020 and EN 1319 standards.

Features

Table 1 shows the main features of this series. Other important features are:

- EC-Type certification (CE PIN 0694BP0610) in accordance with Gas Appliance Directive 90/396/EEC and following amendment 93/68/EEC;
- in accordance with EN 298 (European standard for automatic gas burner control systems and flame detectors);
- completely solid and high efficient inbuilt ignition device with built-in **E.M.C. filter**;
- possibility of mounting a resistor (0 ÷ 470 kohm) in series to the lockout signal output, to avoid possible damages to the control in case the connections of the reset button and the connections of the lockout signal are reversed;
- accurate and repeatable timings;
- flame monitoring by the rectification property of the flame (ionization);
- direct ignition of burner or by means intermittent pilot;
- multiple re-ignition attempts;
- possibility of connection to balanced mains supply (live-live network).

ПРОМЭЛЕКТРОНИКА / sales@prom-elec.com

TABLE 1

The following table lists the main features of the controls. For more details about operation modes and options see the controls denomination paragraph.

Type	Reset	Fan	VG2 (3)	Safety thermostat (2)	EN 298 code (1)
DM11	Manual	No	No	No	AMCLXN
DM12	Manual	No	Yes	No	ATCLXN
DM31	Manual	Yes	No	No	FMCLXN
DM32	Manual	Yes	Yes	No	FTCLXN
DE11	Electrical	No	No	No	AMCVXN
DE12	Electrical	No	Yes	No	ATCVXN
DE31	Electrical	Yes	No	No	FMCVXN
DE32	Electrical	Yes	Yes	No	FTCVXN
DTM11	Manual	No	No	Yes	AMCLXN
DTM12	Manual	No	Yes	Yes	ATCLXN
DTM31	Manual	Yes	No	Yes	FMCLXN
DTM32	Manual	Yes	Yes	Yes	FTCLXN
DTE11	Electrical	No	No	Yes	AMCVXN
DTE12	Electrical	No	Yes	Yes	ATCVXN
DTE31	Electrical	Yes	No	Yes	FMCVXN
DTE32	Electrical	Yes	Yes	Yes	FTCVXN

(1) Flame failure during TS causes spark restoration.

(2) Safety thermostat opening causes recycling followed by lockout.

(3) VG2 output may be used to signal the flame presence to a remote device (mains voltage output).

TECHNICAL DATA

Rated Supply Voltage: 220-240V~ 50-60Hz

Operating temperature range: -20℃ +70℃

Ambient humidity: 95% max at 40℃

Protection degree: IP 00

Times:

- Waiting time **(TW):** 0...60 s
- Pre-purge time **(TP):** 0...60 s
- Safety time **(TS):** 3...120 s
- Ignition time of spark **(TSP):** (TS-1) s
- Response time in case of flame failure: < 1 s
- Post-purge time: 0…30 min
- Inter-waiting or inter-purge time: 1…240 s
- Delay time on VG2 opening: 0…60 s
- Lockout for no air flow at starting: 3…120 s
- Pre-ignition time: 0… 60 s

Re-cycling attempts: 1…10

Power consumption: 30 VA

Contact rating:

- Room thermostat: 4 A $\cos\varphi \geq 0.4$
- VG1: 240V RMS 0.5 A $\cos\varphi \geq 0.4$
- VG2: 0.3 A at 20 ℃ (A)
  0.2 A at 60 ℃ (A)
  0.15 A at 70 ℃ (A)
- Fan: 1.3 A (B)
- Lockout signalling:
  with high voltage output: max. 50mA RMS with 0Ω resistance
  0,5mA RMS with 470kΩ resistance
  LED indicator output: max 8mA (C)

(A) VG2 is driven by an optotriac

(B) The fan is driven by a triac

(C) this output is not safe to touch

Max. length of the cables of external components (except room thermostat): 1m

Internal fuse rating: 3,15 A Fast

External fuse rating (suggested) *: 2 A Fast

* The external fuse rating must be selected according to applied load; in any case its value must never exceed internal fuse rating.

Flame control:

The ionization flame detection device makes use of the rectification property of the flame.

The ionization flame rod is a safe to touch output (provided with protective impedances).

As important safety aspect, note that the control system is more flame sensitive at starting or during waiting/pre-purge time (negative switching differential).

- Minimum ionization current: 0.5 µA
  on request: 1.2 µA / 2.5 µA
- Recommended ionization current: 3 ÷ 5 times the minimum ionization current
- Max. length of the cable: 1m
- Minimum insulation resistance of the cable and the flame detector device to earth: ≥ 50MΩ
- Max. parasitic capacitance of the detection probe: ≤ 1nF
- Max. short circuit current: < 200 µA AC

Ignitor:

- Peak ignition voltage: 15 kV at 30pF loading
  on request: 12/18 kV
- Peak current: 800 mA
- Spark repetition rate **: 25 Hz
  on request **: 1 ... 50 Hz
- Max.length of the cable: 2 m
- Spark gap recommended: 2-4 mm
- Consumption: 2,5 VA
- Spark energy: 20 mJ

** The ignitor output is not safe to touch if the spark frequency is greater than 25Hz; in this case additional protection has to be provided in the appliance.

Optotriac:

- Repetitive peak off-state voltage: 400 V
- RMS on-state current (20 ℃): 300 mA
- RMS on-state current (60 ℃): 200 mA
- RMS on-state current (70 ℃): 150 mA
- Off-state current (100 ℃): 100 µA

Triac:

- Repetitive peak off-state voltage: 600 V
- RMS on-state current : 500 mA

Weight about: 150 g

Varnishing: on request

Construction

The enclosure made of plastic material (and the varnishing of the circuit board on request) protect the control from mechanical damages, dust and dirt from the conditions of installation.

Through the use of an electronic board assembled with surface mounted components, which houses the “logic core” of the system, and of a new **patented** circuit generating the ignition spark which limits the electromagnetic interferences to a minimum, it has been possible to reduce the printed circuit board dimensions and to realize even the most complex control with extremely compact dimensions.

A varistor protects the control from voltage transient on the mains supply, caused for example by discharges such as lightnings. An internal accessible fuse protects the relays of the control in case of short circuits on the outputs (valves, fan and lockout signal).

ПРОМЭЛЕКТРОНИКА / sales@prom-elec.com

Overall Dimensions

The automatic control systems of the DIGITAL MICROFLAT Series can be supplied in different executions but with the same enclosure. The following figure (Fig. 1) shows the overall dimensions of the systems.

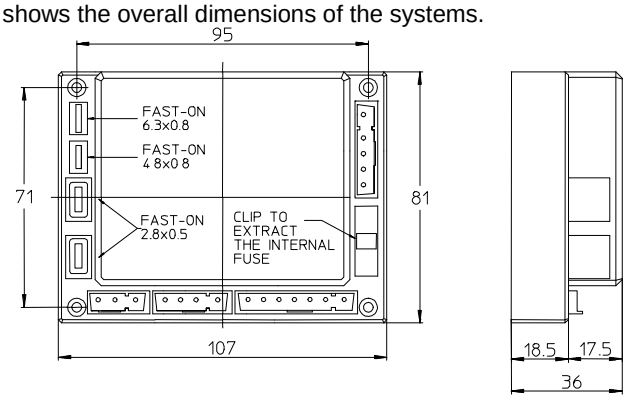

Fig.1

Possible fixing systems

top:	Self-tapping screw	UNI6951AB 2.9x22
	M3x22 screw	UNI6107
bottom:	Screwplast self-forming screw	ISO0003 F 3.5x13
	Screwplast self-forming screw	ISO0003 F 3.9x13

Accessories

The control systems are usually supplied with a kit of female connectors and/or a reset button (see Fig.2).

Do not fit terminals and female connectors of different types.

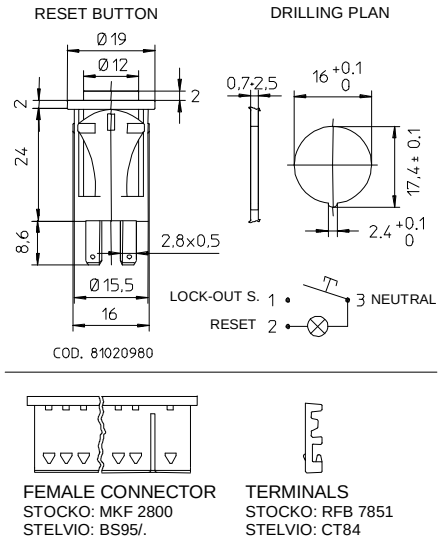

Fig.2

Connection

The use of non-reversible connectors with a different number of poles makes the connection easy and reliable. One-way fast-on connectors of different sizes for ignition and detection electrodes permit their easy installation and replacement.

The dual output ignition device allows spark generation on one point (3a), two points (3b) or between two electrodes isolated from the metal frame of the burner (3c), see Fig.4.

The configuration (3c) assures a limited electromagnetic interference emission.

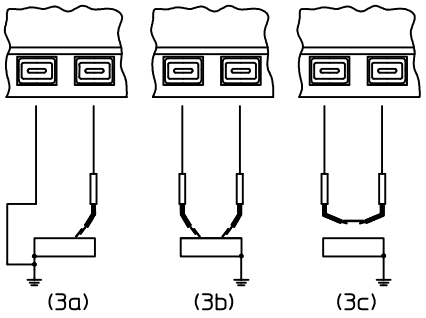

Fig.3

Provisions such as strain relieves, sufficient earth terminals and neutral terminals should be present in the appliance or in external connection boxes.

The control systems types DTM…/DTE… are prearranged for the connection of a safety thermostat ST (as shown in Fig.4) which stops the supply to the gas valve VG1 and causes a safety shutdown after a delay which is the sum of waiting (pre-purge) and safety times. If a self-resetting safety thermostat is applied, the return time of this thermostat in the appliance must be longer than the total time needed for the maximum allowed number of re-ignition attempts in order to reach lockout.

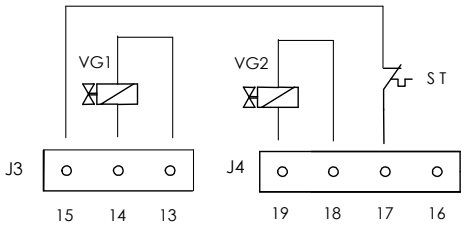

Fig.4

Directions for use

- For technical and safety reasons a regulation shutdown must occur every 24 hours (systems for non-permanent operation).
- Automatic control systems are safety devices and must not be opened. The manufacturer's responsibility and guarantee are invalidated if the control is opened.
- The control system must be connected and disconnected only after switching off the mains supply.
- The control system can be mounted in any position.
- Avoid exposing the control system to dripping water.
- Ventilation and the lowest temperature ensures the longest life of the control system.
- Make sure that the type (code and times) you are using is correct before installing or replacing the control system.
- The gas appliance on which the control system is installed must provide adequate protection against the risk of electrical shock (at least IP20).

Electrical installation

- The applicable national regulation and the European standards (e.g. EN 60335-1/EN 50165) regarding electrical safety must be respected.
- Live and neutral should be connected correctly, a mistake could cause a dangerous situation, i.e. the valves would still be live with the thermostats and limits switched off. If live-neutral polarity is not respected the control performs a non-volatile lockout at the end of the safety time at starting up. This is not valid for not polarized versions (identified by N option).

– Before starting the system check the cables carefully. Wrong connections can damage the control system and compromise the safety.
– The earth terminal of the control system, the metal frame of the gas burner and the earth on the mains supply must be well connected.
– Avoid putting the detection cable close to power or ignition cables.
– Use a heat resistant cable for the detection probe, well insulated to the ground and protected from possible moisture (or water in general).
– Use an ignition cable as short and straight as possible and keep it far from other conductors to reduce the emission of interference (max. length <2m and insulation voltage >25kV).

In case of live-neutral network with unearthed neutral or live-live network (with centre of the star not earthed) the control can operate correctly by means of a built-in resistor.
In case of "partial" short circuits or bad insulation between live and earth the voltage on the ionization probe can be reduced until it causes the lockout of the control, because of the impossibility of detecting the flame signal.

Checking at start

Always check the control system before the first start and also after any substitutions or a long period of non-operation of the system. Before any ignition attempt make sure that the combustion chamber is free from gas.
Then make sure that:
– if the starting attempt occurs without gas supply the control system performs a lockout after TS;
– when stopping the gas flow while the control is in running state the supply to the gas valve is interrupted within 1 second, and after a recycling (or more up to 10 depending on setting up) the control system proceeds to a lockout;
– operating times and sequence are suitable;
– the level of the flame signal is sufficient, see Fig.5 for the measuring test;
– the ignition probe(s) is (are) adjusted in the most stable way for a spark gap between 2-4 mm;
– the intervention of limiters or safety devices causes a safety shutdown or lockout according to the application.

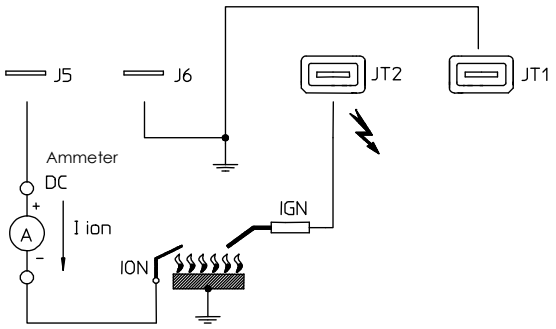

Fig.5

Operation

This description relates to the control system having standard operating cycle:
At every start the control system proceeds to a self-checking of its own components. During the waiting (TW) or pre-purge time (TP) the operation of the flame signal amplifier is checked: the internal circuit makes a test of the flame signal amplifier circuit. A flame simulation or a fault in the amplifier leading to the same condition prevent the control system from starting.
In the types with fan control, before the elapsing of the pre-purge time (TP), the air pressure switch contacts are checked to prove their "no air flow" state.
Only if the test is positive the fan is started and with the air pressure switch in "air flow" state the pre-purge time (TP) begins. The air pressure switch contacts test is repeated at every operating cycle start.
At the end of the waiting (TW) or pre-purge time (TP) the VG1 gas valve is energized and the ignition device is operated. In this way the safety time (TS) begins. If the presence of flame is detected during the safety time the ignition device is inhibited and, in the suitable models, the main valve (VG2) is supplied.
On the contrary, if the control system detect no presence of flame by the end of TS, it proceeds to lockout, the VG1 gas valve and the ignition device are switched off while the lockout signal output is supplied.
Flame failure during the safety time causes the ignition device to be activated within one second.
The attached operating cycles diagrams are useful to understand how each control operates.

Variations on operating cycle

Followings are the available variations on the operating cycle of control systems:
– Option 11: Lockout for flame simulation

If the control system detects a flame simulation at starting or during waiting/pre-purge time, then it performs a lockout.
– Option 12: No or insufficient air flow

If the control system detects no or insufficient air flow at starting or during waiting/pre-purge time, then it performs a lockout within 3÷120 seconds (the time is set on request).
– Option 13: Air flow failure at running

If an air flow failure occurs during running the control system performs a lockout without delay.
– Option 14: Flame failure at running

If a flame failure occurs during running the control system performs a lockout.
– Option 16: Post-purge time

The interval between any shut-down and the moment the fan is switched off (the time is set on request).
– Option 17: Recycling attempts

The control system carries out multiple recycling attempts after a shutdown (the number of attempts is set on request).
– Option 18: Inter-waiting or inter-purge time

The control system carries out a waiting or purge time after unsuccessful ignition attempt and prior to the next recycle attempt.
– Option 21: Pre-ignition time.

The control system energises the ignition device at the end of waiting or pre-purge time and before the beginning of safety time (pre-ignition time is set on request)

Reset of the control system

Non-volatile lockout (manual reset)

When a control system has reached the non-volatile lockout condition, to reset the control system it is necessary to act on the reset push-button.

Volatile lockout (electrical reset)

The reset of the control system from volatile lockout is achieved by means of the interruption of the mains supply and its subsequent restoration. It is not possible to reset the control system by switching off the heat demand device.

CONTROLS DENOMINATION

Type **Options**

D (1) (2) (3) (4) (5) (6) (7) (8) (9) (10) (11) (12) (13) (14) (15) (16) (17) (18) (19) (20)

Type description

(1) T: prearranged for safety thermostat (ST) connection
(2) M or E: non-volatile lockout (M) or volatile lockout (E)
(3) 1 or 3: without fan (1) or with fan (3)
(4) 1 or 2: direct ignition (1) or intermittent first stage (2)

Options description

(5) *: EN 298-2003 compliant
(6) Ignition mode
- no letter: ignition spark operates for TSP time (TS-1). This is the standard mode
- A: ignition spark operates for TS
- B: ignition spark is switch off when flame presence is detected

Note: Options A and B available in version with separate ignition and detection electrodes only.

(7) R: resistor in series to lockout signalling as protection against reset push-button reversed connection
(8) Ignition voltage
- no letter: 15 kV (standard rate)
- H: 18 kV
- L: 12 kV

(9) Spark repetition rate
- no number: 25 Hz (standard rate)
- nn: see ignitor in TECHNICAL DATA paragraph

(10) 2nd VG opening with flame presence
- no letter: no delay (This is the standard mode)
- X: at the end of safety time TS
- W: delayed (see TECHNICAL DATA paragraph)

Note: The standard version is available in the configuration with separate ignition and detection electrodes only.

(11) Lockout for flame simulation
- no letter: not available (the control remains in continuous waiting/pre-purge state). This is the standard mode
- K: lockout condition

(12) No or insufficient air flow at starting
- no letter: the control remains in stand-by condition. This is the standard mode
- Q: the operation mode is set on request (see TECHNICAL DATA paragraph)

(13) Air flow failure at running
- no letter: safety shutdown followed by stand-by condition. This is the standard mode
- S: lockout condition without delay

(14) Flame failure at running
- no letter: recycling (see TECHNICAL DATA paragraph). This is the standard mode
- V: lockout condition without delay

(15) Connection to the mains supply
- no letter: Live-Neutral polarized (phase sensitive control). This is the standard mode
- N: 2 relays for gas valve (1 for Phase, 1 for Neutral). Not polarized;
- N1: Phase-Neutral polarized (phase sensitive control) with 2 relays for the gas valve (1 for Phase, 1 for Neutral)
- N2: as N1 but the control is Neutral sensitive (L-N connections are reversed)

(16) Post-purge
- no letter: no post-purge. This is the standard mode
- P: the post-purge time is set on request (see TECHNICAL DATA paragraph)

(17) Recycling attempts
- no letter: one recycling after a safety shut-down. This is the standard mode
- Y: multiple re-ignition attempts on request (see TECHNICAL DATA paragraph)

(18) Inter-waiting or inter-purge
- No letter: no inter-waiting or inter-purge time. This is the standard mode
- I: the inter-waiting/inter-purge time is set on request (see TECHNICAL DATA paragraph)

(19) Lockout indicator output
- No letter: high voltage output with max current output 50mA
- F: LED indicator output with 8mA max (this output is not safe to touch)

(20) Air pressure switch control
- No letter: Air pressure switch control
- G: Without air pressure switch control
- G1: Recycling for flame failure without control of the air pressure switch status.
- G2: Recycling without control of the air pressure switch status in case heat demand still occurs at the end of the post-purge stage.

Note: Controls with option “G” are intended for special applications in which a check of the air flow is not required by the appliance standard.

(21) Pre-ignition:
- No letter: Without pre-ignition. This is the standard mode
- J: With pre-ignition. The pre-ignition time is set on request (see TECHNICAL DATA paragraph)

Note: Option J available in version with separate ignition and detection electrodes only.

Example: **DTM32 RHVN** ⇒ The features of this control type are:

T: prearranged for safety thermostat (ST) connection
M: non-volatile lockout
3: with fan
2: intermittent first stage

R: resistor in series to lockout signalling as protection against reset push-button reversed connection
H: ignition voltage 18 kV
V: lockout condition without delay when flame failure during running
N: not polarized

CONNECTION DIAGRAMS

SEPARATE DETECTION AND IGNITION PROBES

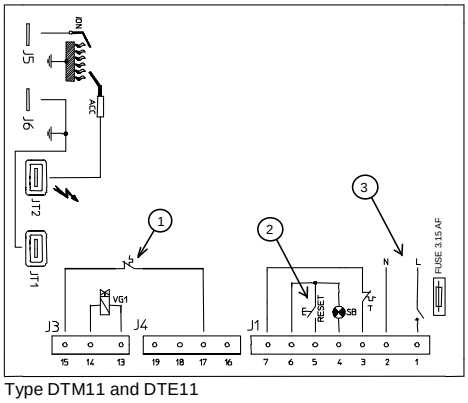

Type DTM11 and DTE11

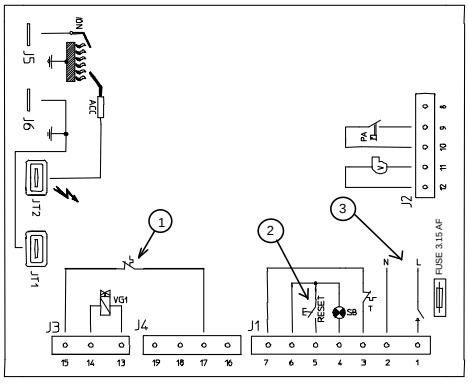

Type DTM31 and DTE31

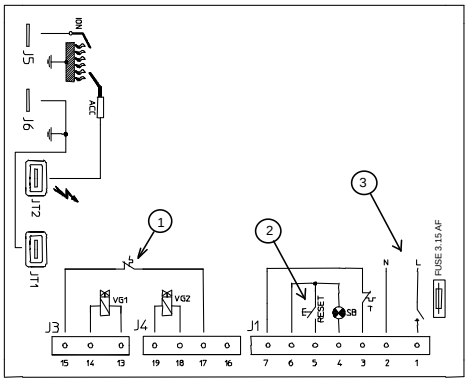

Type DTM12 and DTE12

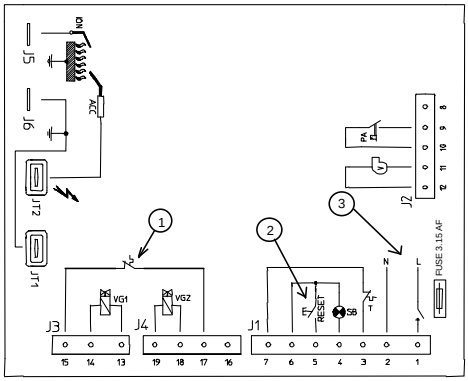

Type DTM32 and DTE32

SINGLE DETECTION - IGNITION PROBE (MONOELECTRODE)

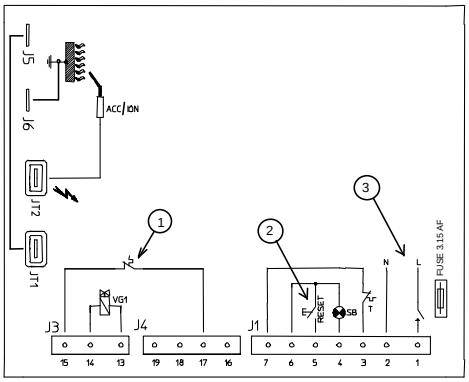

Type DTM11 and DTE11

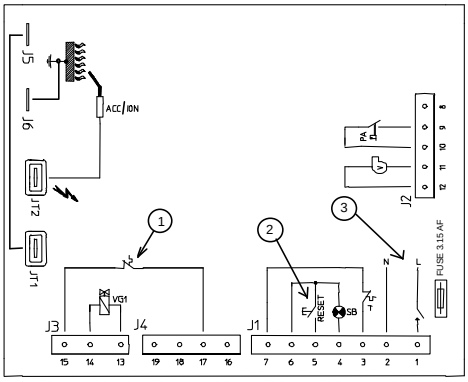

Type DTM31 and DTE31

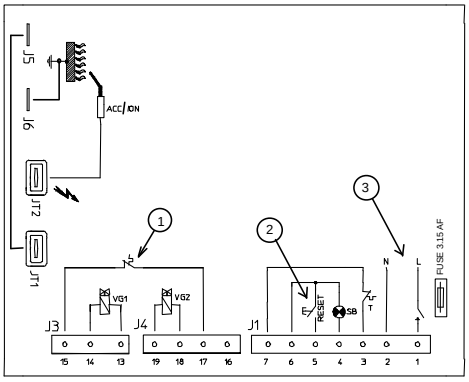

Type DTM12 and DTE12

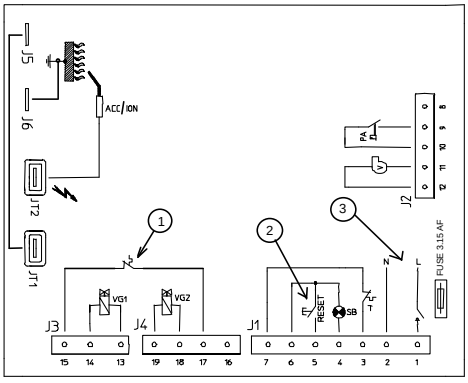

Type DTM32 and DTE32

NOTE: the limit thermostat has to be wired in series to the live.

(1) In DM11, DM12, DM31, DM32 and DE11, DE12, DE31, DE32 types the safety thermostat is not wired

(2) In DTE11, DTE12, DTE31, DTE32 and DE11, DE12, DE31, DE32 types the RESET button is not wired

(3) In versions fitted with N2 option L-N connections on J1 are reversed

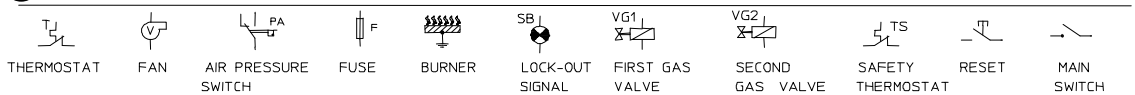

OPERATING CYCLES

STANDARD VERSIONS WITHOUT SAFETY THERMOSTAT

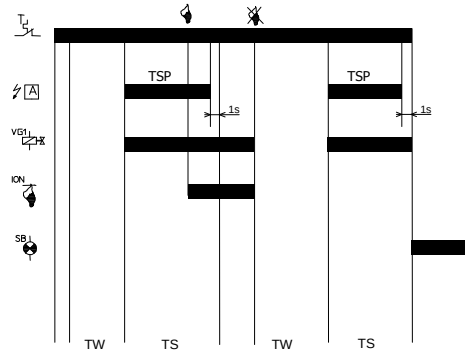

DM11 and DE11

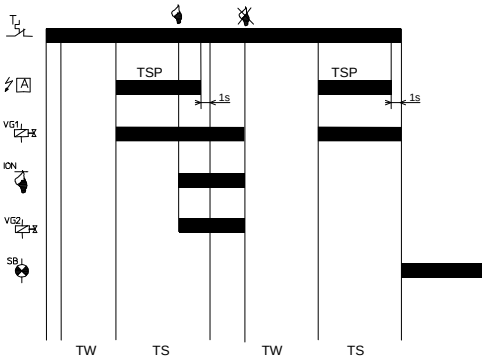

DM12 and DE12

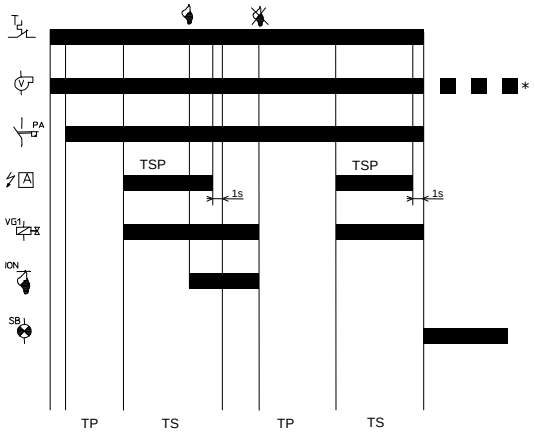

DM31 and DE31

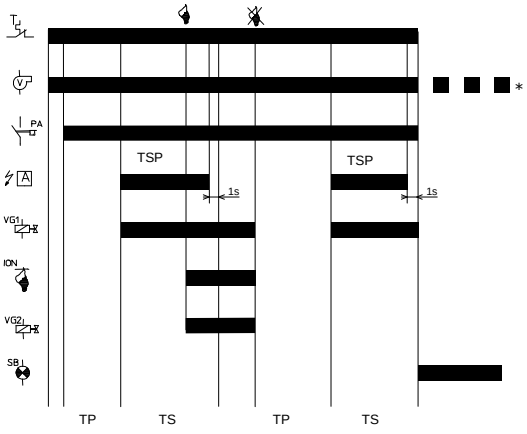

DM32 and DE32

STANDARD VERSIONS WITH SAFETY THERMOSTAT

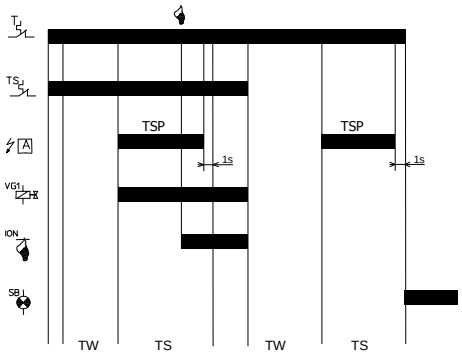

DTM11 and DTE11

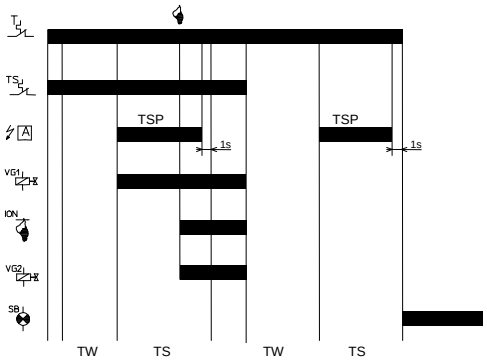

DTM12 and DTE12

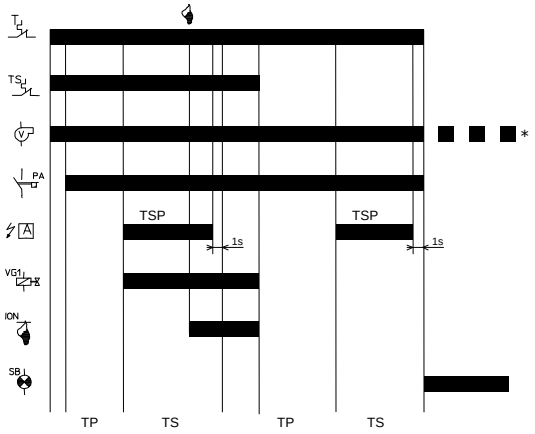

DTM31 and DTE31

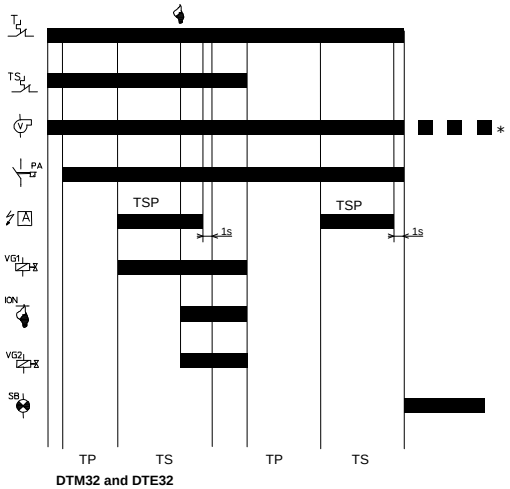

DTM32 and DTE32

* Post-purge (see description Option 15 paragraph Variations on operating cycle)

THERMOSTAT	FAN	AIR PRESSURE SWITCH	IGNITION	FLAME SIGNAL	LOCK-OUT SIGNAL	FIRST GAS VALVE	SECOND GAS VALVE	SAFETY THERMOSTAT

OPERATING CYCLES

AVAILABLE OPTIONS

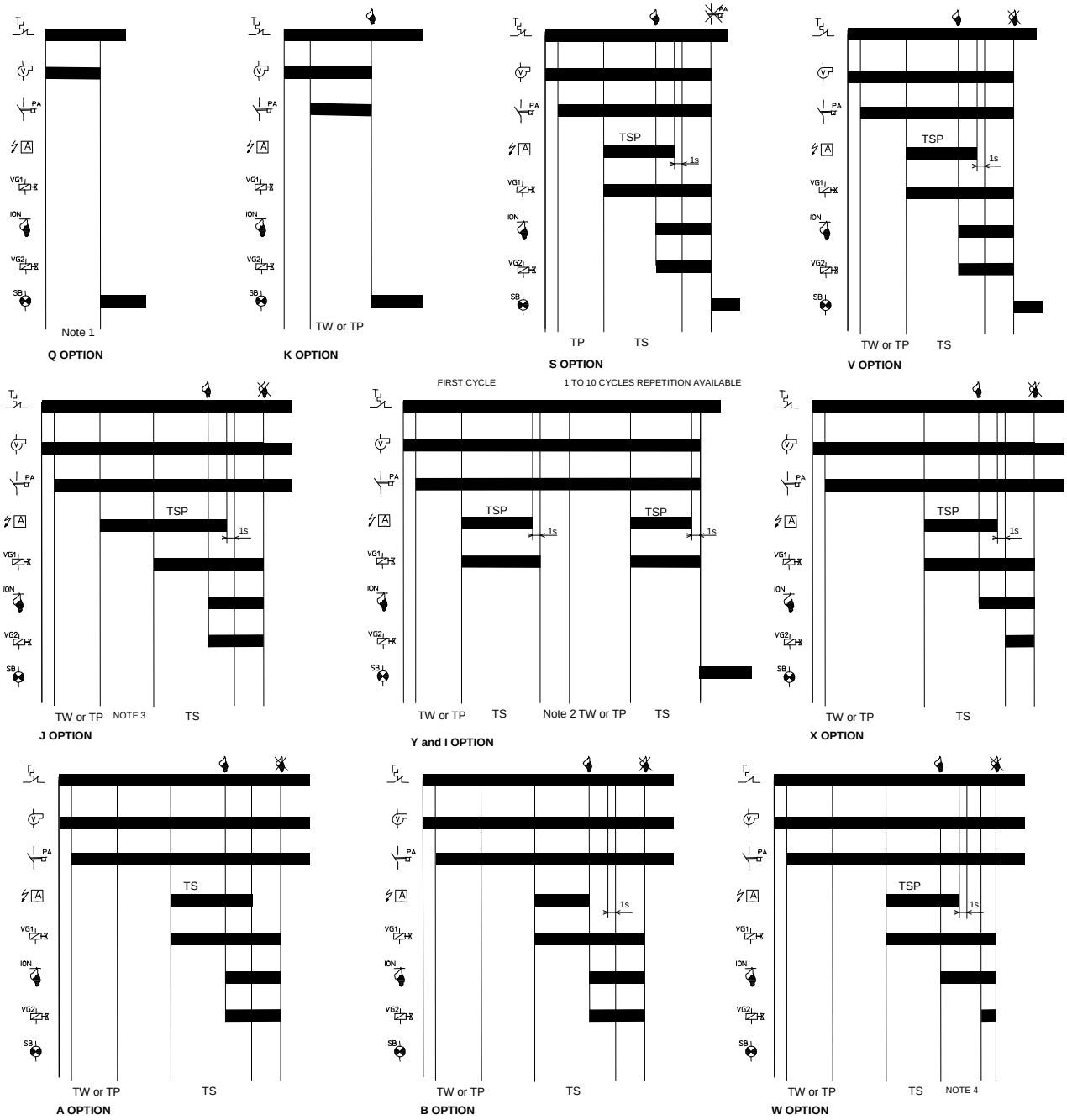

NOTES

1. Lock- out condition with delay available
2. Inter- waiting or inter-purge time available
   As special setting the waiting/pre-purge time between each recycling attempt may be replaced altogether by inter-waiting/inter-purge time, provided that this sequence is allowed by final appliance
3. Pre- ignition time available.
4. Second stage ignition delay time available.

   WARNING: the limit thermostat has to be wired in series to the live.

THERMOSTAT	FAN	AIR PRESSURE SWITCH	IGNITION	FLAME SIGNAL	LOCK-OUT SIGNAL	FIRST GAS VALVE	SECOND GAS VALVE	SAFETY THERMOSTAT

TYPES DM3X, DE3X, DTM3X, DTE3X WITH G OPTION

Controls with option “G” are intended for special applications in which a check of the air flow is not required by the appliance standard. In this version it is necessary to connect pin 9 and pin 10 externally (see attached connection diagrams)

CONNECTION DIAGRAM

SEPARATE DETECTION AND IGNITION PROBES

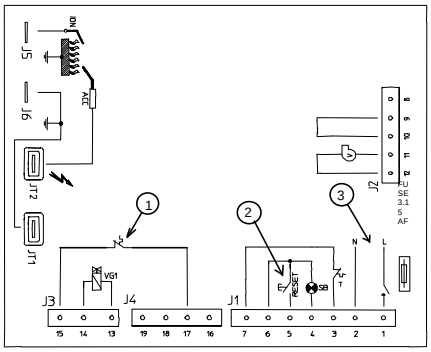

Type DTM31 and DTE31

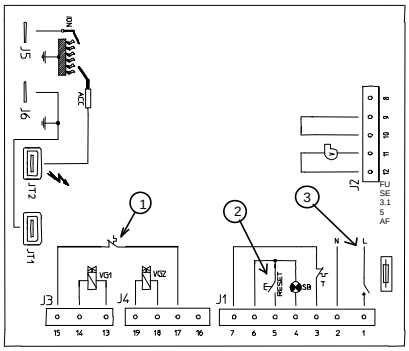

Type DTM32 and DTE32

SINGLE DETECTION- IGNITION PROBE (MONOELECTRODE)

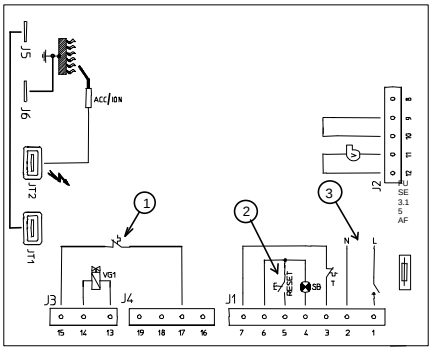

Type DTM31 and DTE31

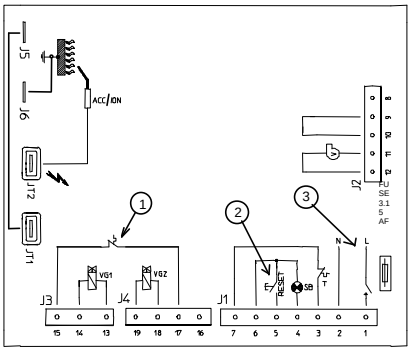

Type DTM32 and DTE32

(1) In DM31, DM32 and DE31, DE32 types the safety thermostat is not wired

(2) In DTE31, DTE32 and DE31, DE32 types the RESET button is not wired

(3) In versions fitted with N2 option L-N connections on J1 are reversed

OPERATING CYCLES

STANDARD VERSIONS WITHOUT SAFETY THERMOSTAT

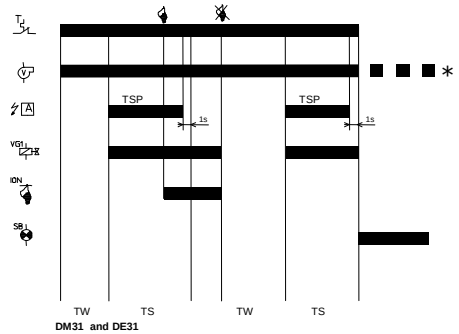

DM31 and DE31

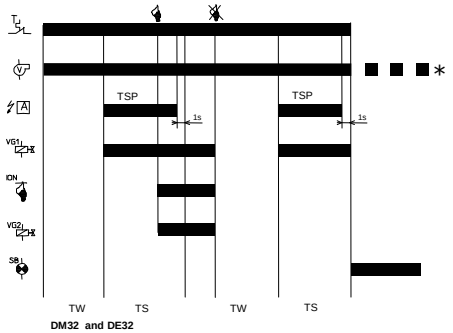

DM32 and DE32

STANDARD VERSIONS WITH SAFETY THERMOSTAT

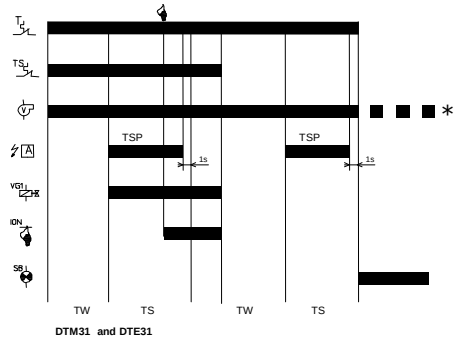

DTM31 and DTE31

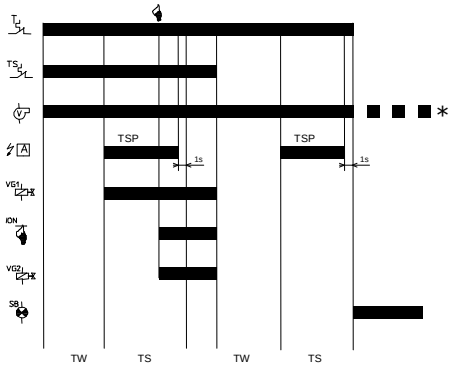

DTM32 and DTE32

* (V) Post-purge (see description Option 15 paragraph Variations on operating cycle)

TJ	V	A	ION	SB	VG1	VG2	ST
THERMOSTAT	FAN	IGNITION	FLAME SIGNAL	LOCK-OUT SIGNAL	FIRST GAS VALVE	SECOND GAS VALVE	SAFETY THERMOSTAT