Oil Burner Safety Control

For 1- or 2-stage oil power burners up to 30kg/h capacity with or without oil preheater and intermittent operations.

Flame detection:
- Photoresistor MZ 770 S
- Infrared-flicker detector IRD 1010
- UV solid state sensor UVD 970

APPLICATION RANGE

The TF 834 or TF 836 oil burner safety control boxes are suitable to control and monitor oil power burner up to 30 kg/h capacity (approved and certified according to DIN 4787). A special contact in the control unit short-circuits the thermo-switch of the oil preheater as soon as the burner is operating and the flame signal is present. Therefore interruption of the burner due to decreasing oil temperature (e.g. in case of high oil flow) can be prevented.
If the control box goes into lock-out mode, the oil preheater power supply is also disconnected.

TYPES AVAILABLE

TF 834	1-stage operation post-ignition time ca. 20 sec.
TF 834 E	1-stage operation no post-ignition
TF 836	2-stage operation post-ignition time 2-4 sec.

CONSTRUCTIONAL FEATURES

The control box circuitry is protected by a flame resistant, transparent plastic housing. It incorporates the thermo-mechanical, temperature compensated timer, flame check and reset circuits.
Manual reset from lockout is provided by a push button with an integrated lockout signal lamp. A central fixing screw locks the control box to the wiring base. The wiring base and control box have a positive plug-in arrangement, making it impossible to achieve an incorrect connection between the two parts. A variety of cable entry points provides utmost flexibility of electrical wiring.

The TF 834 and TF 834 E are fully compatible with the TF 734 and TF 734-2 respectively.
An optional extension button (item no. 70601) compensates for height differences.



TECHNICAL DATA

Operating voltage		220/240 V (-15..+10%) 50 Hz (40-60Hz)
Fuse rating		10 A fast, 6 A slow
Power consumption		ca. 5 VA
Max. load per output		
- terminal 3		1.5 A, cos φ 0.2
- terminal 4		4 A, cos φ 0.4
- terminal 5		0.5 A, cos φ 0.4
- terminal 6		4.0 A, cos φ 0.4
- terminal 7		0.1 A, cos φ 0.4
- terminal 8		0.5 A, cos φ 0.4
- terminal B		0.5 A, cos φ 0.4
total load		5A, cos φ 0.4
Pre-purge time		ca. 12 sec.
Pre-ignition time		ca. 12 sec.
Post-ignition time	TF 834	ca. 20 sec.
	TF 834 E	
	TF 836	ca. 2-4 sec
Delay time to oil valve 2	TF 836	ca. 40 sec.
Lockout safety time		10 sec.
Reset time from lockout		ca. 60 sec
Special version with other timings on request		
Flame detector:		
MZ 770 S		side-on and end-on viewing
Light sensitivity MZ 770 S		> 6 Lux
IRD 1010		side-on or end-on viewing
UVD 970		end-on viewing
Weight incl. wiring base		0.25 kg
Mounting position		any
Protection class		IP44
Recommended ambient operating temperature for control and flame detector		0°C...+60°C

ПРОМЭЛЕКТРОНИКА / sales@prom-elec.com

APPLICATION NOTES

1. Flame control

The following detectors can be used for flame control:
- For yellow oil flame: photoresistor MZ 770 S
- for blue or yellow flame: infrared-flicker detector type IRD 1010 or as alternative the UV solid state sensor UVD 970.

Using the photo resistor MZ 770 S, the no flame signal is generated at light levels below 3 Lux with respect to the operating cycle of the control. According to DIN 4787 stray light safety level has to be established in conjunction with the accompanying burner.
Connecting the IRD 1010 or the UVD 970, the correct wiring has to be observed.

2. Burner control

With oil preheater:
The fuel heater of the burner must have a temperature control switch. The closing contact-switch of the preheater has to be connected between terminals 4 and 6. A special contact in the control unit-connects the thermo-switch of the heater as soon as the burner is operating and a photocurrent is generated. Therefore an interruption of the burner operation due to a decrease in oil temperature is prevented (e.g. in case of high oil flow).
According to DIN 4787, the short circuiting of the thermo-switch is allowed only for an oil flow of max. 10 kg/h. Burners with a higher throughput have to shut down if the oil temperature gets below the allowed minimum. In such a case the thermo-switch has to be put in the phase-circuit and terminals 4 and 6 have to be connected with a link.

Without oil heater:
In such a case the terminals 4 and 6 have to be connected with a link.

3. Safety

The design and control sequence of the TF 834, TF 834 E and TF 836 control boxes comply with the currently applicable European standards and regulations.

4. Mounting and electrical wiring

Wiring base:
- 3 earth terminals with additional terminal for burner earthing
- 3 neutral terminals with internal permanent connection to neutral terminal (terminal 7)
- 2 spare auxiliary terminals
- 2 slide in plates and 2 easy-knockout holes (PG 11 thread), plus 2 easy-knockout holes in the bottom of the base facilitate the wiring.

General:
- The control box can be mounted in any position. The protection class is IP44 (water spray tight). Neither the control box nor the flame detector should be subjected to excessive vibration.

COMMISSIONING AND ROUTINE CHECKS

1. Important notes

- The controls must be installed by qualified personnel only. The relevant national regulations have to be observed.
- On commissioning the wiring has to be carefully checked according the appropriate diagram, Incorrect wiring can damage the unit and endanger the installation.
- The fuse rating has to ensure that the limits specified in TECHNICAL DATA will not be exceed. If these precautions are not observed, the effect of a short circuit can cause severe damage to the control and installation.
- For safety reasons a minimum of one control shut-down per 24 hours has to be observed.
- Disconnect the mains before the control box is plugged in or out!
- The control box is a safety device and must not be opened!

2. Function control

For safety reasons the flame detection system should be tested on commissioning the installation as well as after a service or longer shut-down.

a) Start-up with covered flame detector
   - After lock-out safety time is over the unit has to go in to lockout mode!

b) Start-up with exposed flame detector:
   - After 20 sec. pre-purge time the unit has to go into lockout mode!

c) Normal start-up with burner in the normal position, cover up the flame detector:
   - After start-up, and end of lock-out safety time the unit has to go into lockout mode!

3. Fault findings

Burner is not working:
- thermostat circuit open
- faulty electrical wiring

Burner starts, but the flame does not establish, a lock out occurs:
- stray light on flame detector
- no ignition or no fuel

Burner starts, the flame establishes, but after the safety time, a lock out occurs:
- dirty or faulty flame detector
- insufficient light on detector
- sensitivity adjustment too low on IRD.

For a quick and safe diagnosis use the Satronic UP 940 burner test box.

CIRCUIT AND TIMING DIAGRAM TF 834/834.E

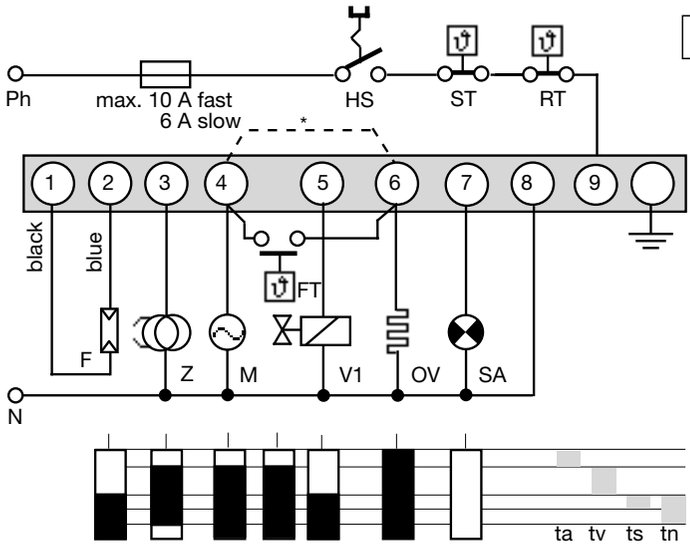

IRD-OR UVD CONNECTION

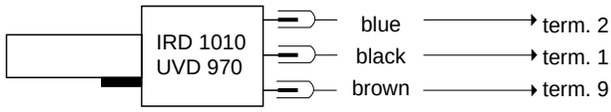

HS	Mains switch
ST	Limit thermostat
RT	Control thermostat
F	Flame detector MZ 770 S (IRD 1010/UVD 970 see separate diagram)
Z	Ignition
M	Burner motor
FT	Release thermostat oil preheater
V1	Oil solenoid valve
OV	Oil preheater
SA	External lock out signal
*	For burners without fuel heaters term. 4 and 6 have to be connected with a link
ta	Pre-heat-time oil preheater
tv	Pre-purge and pre-ignition time
tf	stray light monitoring
ts	Lock out safety time
tn	Post-ignition time

CIRCUIT AND TIMING DIAGRAM 836

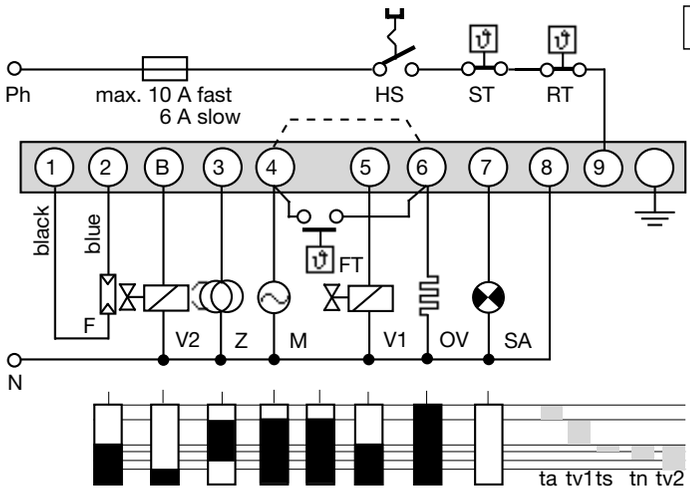

IRD-OR UVD CONNECTION

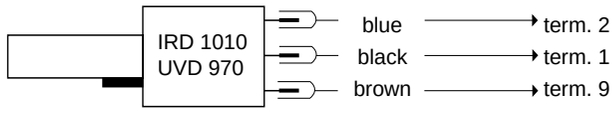

HS	Mains switch
ST	Limit thermostat
RT	Control thermostat
F	Flame detector MZ 770 S (IRD 1010/UVD 970 see separate diagram)
Z	Ignition
M	Burner motor
V1, V2	Solenoid valves
OV	Oil preheater
FT	Release thermostat oil preheater
SA	External lock out signal
*	With burners without fuel heaters term. 4 and 6 have to be connected with a link
ta	Pre-heat-time oil preheater
tv1	Pre-purge and pre-ignition time
ts	Lock out safety time
tn	Post-ignition time
tv2	Delay time to oil V2

SCHEMATIC DIAGRAMM TF 834

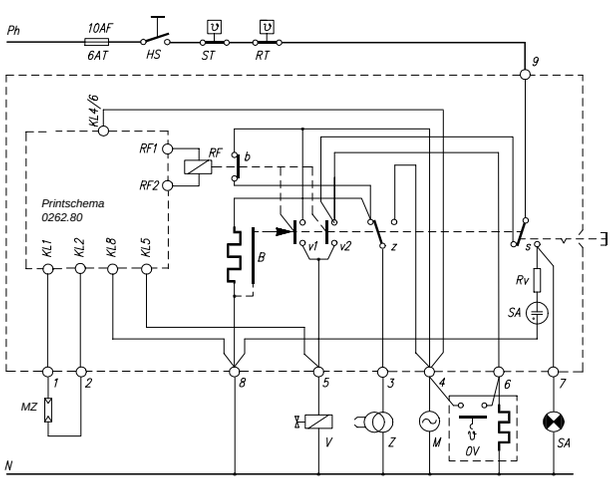

SCHEMATIC DIAGRAMM TF 836

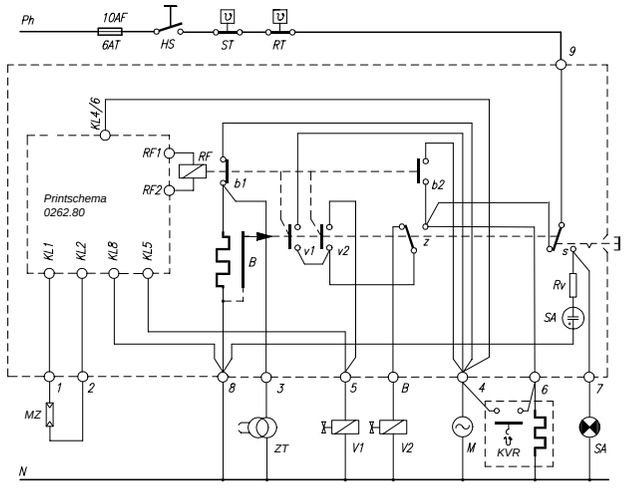

HS	Mains switch	F Flame detector MZ 770 S, IRD 1010 or UVD 970
ST	Limit thermostat	V Valves
RT	Control thermostat	Z Ignition
SA	Lock-out signal indicator	M Burner motor
		OV Oil preheater

RF	Flame relay
rl	low voltage relay
B	Thermomechanical timer
RV	Resistor

TF 834/836

ПРОМЭЛЕКТРОНИКА / sales@prom-elec.com

TF 836.2 AND SOCKET

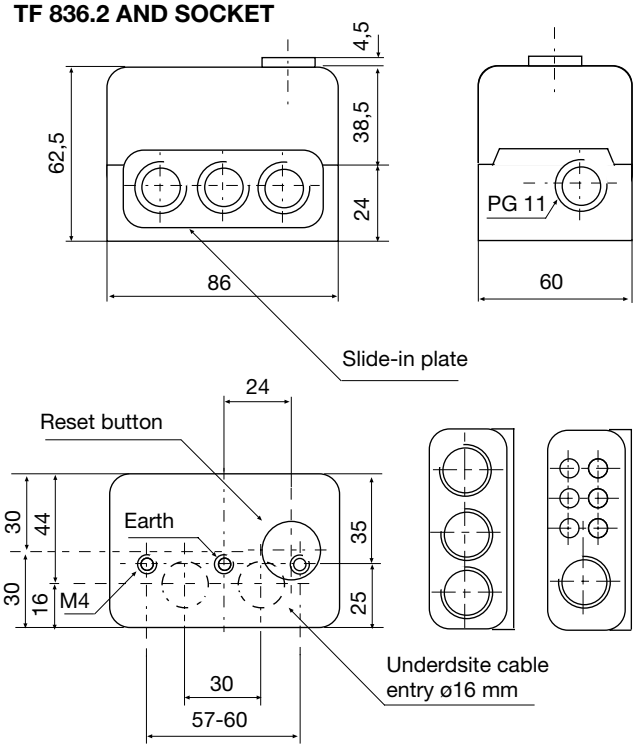

HOLDER MZ 770 S

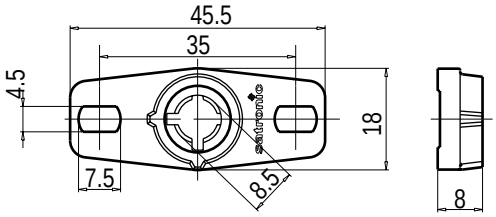

SHAFT MZ 770 S

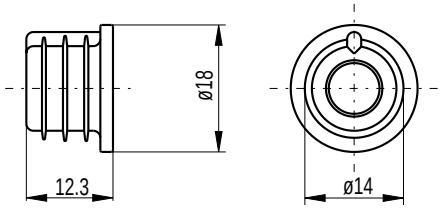

PHOTORESISTOR MZ 770 S

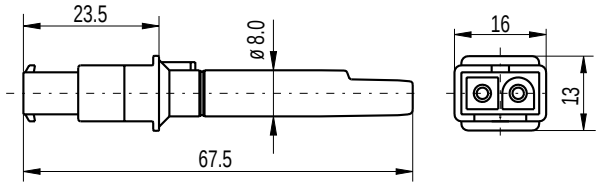

UVD 970

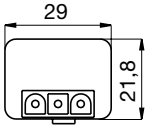

IRD 1010

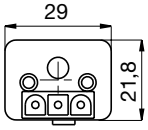

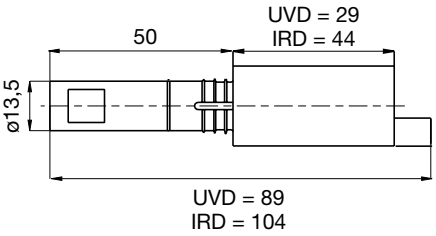

HOLDER M 74 FOR IRD OR UVD

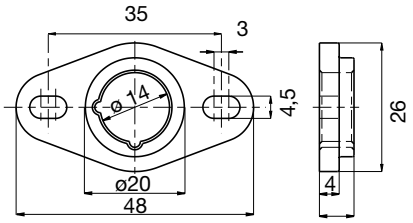

VARIATION IRD

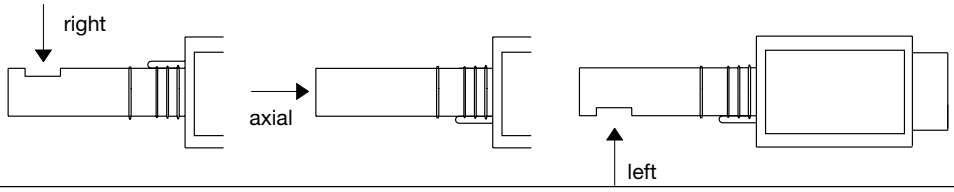

ORDERING INFORMATION

ITEM	DESIGNATION	ITEM NO.
Control box	Type TF 834	02204
Control box	Type TF 834 E	02205
Control box	Type TF 836	02205
Socket	Wiring base S98 9-pin	75300
or	Wiring base S98 12-pin	75310
Insert plate	PG-Plate	70502
optional	Cable entry plate	70503
Flame detector	MZ 770 S	50001
optional	MZ 770 S mounted in shaft	51001
optional	IRD 1010 right	16501
optional	IRD 1010 end-on	16502
optional	IRD 1010 left	16503
optional	UVD 970	16702
Support for flame detector	Holder for MZ	59101
optional	Holder M 74 for IRD, UVD	59074
Connectioncable	Plug type, 3 core cable, 0.6 m, with tag wire ends	7236001
Connectioncable	Plug type, 2 core cable, 0.5 m, with tag wire ends	7225001

The above ordering information refers to the standard version.
Special versions are also included in our product range.

Specifications subject to change without notice

Satronic AG
Honeywell-Platz 1
Postfach 324
CH-8157 Dielsdorf