EUROGAS-EUROOIL SERIES
Type VM44...

DIGITAL AUTOMATIC CONTROL SYSTEM FOR FORCED DRAUGHT GAS BURNERS (VM44G) AND OIL BURNERS (VM44O)



APPLICATION

The devices of this series are designed to control forced draught gas burners or fuel oil burners for non-permanent operation.

This type of devices performs non-volatile lockout, condition from which a restart of the system is only possible by means of the control manual reset. Among the numerous features stands out the possibility of connecting different types of air damper produced by Brahma or by competing companies for dual flame modulation.

Another particular feature of the device is the possibility to communicate (through an appropriate cable) information regarding the operation cycle.

These controllers are suitable to equip burners for domestic and industrial single and dual flame heating.

FEATURES

The main features of this series are the following:

- **EC** Type certification PIN 0694BS1099 in accordance with Gas Appliance Directive 90/396/EC and the following amendment of Directive 93/68/EC;
- in accordance with EN298:2003 (European standard for automatic gas burner control systems), EN676:2003 (European standard for automatic forced draught gas burners), DIN 4788 (German standard for fan-assisted burners) and with EN230:2005 for oil versions;
- possibility of connecting remote lockout and reset signals;
- detection based on the rectification property of the flame (by electrode or through UV emission detection by photodiode FD .. for gas versions VM44G)
- visible light detection (by photocell type FC.. or through UV emission detection by photodiode FD.. for oil versions VM44O)
- two independent safety contacts for the fuel valve control;
- electrical service life at max. declared loading >250.000 operations;
- without burner output limits (times and operation principals must be suitable to the application in the project engineering phase of the same);
- precise and repeatable setting times.

WARNING: *the abbreviations meaning used in this data sheet is available at page 12 in the box (LEGEND OF ABBREVIATIONS).*

ПРОМЭЛЕКТРОНИКА / sales@prom-elec.com

TECHNICAL DATA:

Power supply: 220-240V~ 50-60Hz
a richiesta: 110-120V~ 50-60Hz
Operating temperature range: °C ÷ + 70°C
Storage temperature range: -40°C ÷ + 85°C
Humidity: 95% max at 40°C
Protection degree (with socket): IP 40
Classification code according to EN298/EN230:

Character	Specification	Code
1°	Forced draft	F
2°	non-interrupted pilot at running	T
3°	Non-volatile lockout	V
	Recycle	C
4°	No-volatile lockout	L
5°	Fixed times	X
6°	Non-permanent operation	N

VM44G standard: F T L L X N
VM44O standard: F T C L X N

Under-voltage protection:
When the power supply level is less than about 165Vac (about 78Vac in the 110-120Vac versions), the device will move to the safety mode during the normal operation. The device will restart when the power supply value will be more that about 175Vac (about 83 Vac in the 110-120Vac versions).

Over-voltage Protection:
When the power supply value is more than about 290Vac (about 143Vac in the 110-120Vac versions), the device will move to the safety mode during the normal operation. The device will restart when the power supply value will be less than about 280Vac (about 138Vac in the 110-120Vac versions)

Times:

– Gas versions
  - Pre-purge time (TP): 1,5...60 s
  - Safety time (TS): 2 - 5 s
  - Lockout on PA failure to close (opt. Qnn): 3…120 s
  - Delay for lockout due to flame simulation (opt. Knn): 0…60 s

– Oil versions
  - Pre-purge time (TP): 1,5...60 s
  - Safety time (TS): 2 - 10 s
  - Lockout on TR failure switching(opt. Qnn): 3s - 30min
  - Post-ignition time (opt. Tnn): 0…60 s
  - Delay for lockout due to extraneous light (opt. Knn): 5…60 s

– Both versions
  - Pre-ignition time (opt. Jnn): 0…60 s
  - Delay time on EV2 opening (opt. Wnn): 0…60 s
  - Response time in case of flame failure: < 1 s
  - Interpurge time (opt. Inn): 0…60 s

The times given on the burner control label correspond to the values guaranteed. The actual values differ slightly from the values given, pre-purge and waiting times can be longer and safety time shorter than their nominal values.

Recycling attempts (opt. Ynn and Vnn) 0… 10
Recycles on pressure switch failure (VM44G) 0… 10
Operating power consumption 30VA
Maximum control terminals rating:

– EV1: 1,2 A cos φ ≥ 0.4
– EV2: 0,5A cos φ ≥ 0.4
– Lockout signal(1) : 1 A cos φ = 1
– Fan: 2A cos φ ≥ 0.4
– External ignition device: 0,5A cos φ ≥ 0.2
– EV(2) total range: 1,2A cos φ ≥ 0.4
– Asllowed total range(3) : 3A cos φ ≥ 0.4
– OUT, REF: Digital output $5V_{dc}$, $3mA_{dc}$, $5mA_{pk}$

Maximum thermostat cable length: 100 m
Maximum length of external components cable: 1 m
External fuse rating (suggested)(4): 5A fast blow

Flame detection VM44G:
In the gas versions the detection device makes use of the rectification property of the flame.
- Minimum ionization current: 0.5 µA (standard)
  Upon request: 1,2 µA
- Recommended ionization current: 2÷3 times the minimum ionization current
- Cable Maximum length: 1 m
- Min. insulation resistance of detection electrode and cable to earth: ≥ 10 MΩ
- Max. parasitic capacitance of the detection electrode: ≤ 1 nF
- Max. short circuit current: < 50 µA AC

In devices with 0.5 µA minimum ionization current it's possible to use FD1-FD2 sensors.

Flame detection VM44O:
In the oil versions it's possible to use FD1-FD2 sensors and in addition three different types of photocells of our production in order to meet all the requirements of the final application. The following table shows the type and the sensitivity values that can be required. For the dimensions and the fixing templates see paragraph "Accessories".

Type FC..	Sensitivity	Side
FC11	1,5 ÷ 6,5 lux	Lateral and Frontal
FC13 red	1,5 ÷ 6,5 lux	Lateral and Frontal
FC 13 blue	1,5 ÷ 3 lux	Lateral and Frontal
FC14 red	1,5 ÷ 6,5 lux	Lateral and Frontal
FC14 blue	1,5 ÷ 3 lux	Lateral and Frontal

Lockout signal triac output:

– Peak tension (off - state) 600V
– Loss current (off-state) 500 µA
– RMS current (on-state) 1 A
– dI/dt derive from critical current (on-state) 10 A/µs

Weight (with socket): 250 g

NOTES:
(1) Lockout signal piloted by triac
(2) The sum of the ranges, EV1+EV2, anyway must not exceed the total maximum range EV (PTEV), for instance:
- EV1= 0,7 A, EV2= 0,5 A, so PTEV= 1,2 A
- EV1= 1,2 A, no EV2 (0 A), so PTEV= 1,2 A

(3) The sum of the ranges, Fan+EV1+EV2, anyway must not exceed the allowed maximum total range (PT), for instance:
- Fan= 2 A, EV1= 0,5 A, EV2= 0,5 A, so PT= 3 A
- Fan= 2 A, EV1= 1 A, no EV2 (0 A), so PT= 3 A

(4) The external fuse value must be selected according to the maximum applied load; anyway the value must not exceed the internal fuse value of 6,3A.

CONSTRUCTION
The use of surface mounting components, which constitutes the "logic nucleus" of the system, have allowed to reduce the dimensions of the PCB, so that even the most complicated version takes a very limited space . The use of the microcontroller for the logic core allows to realize devices with very flexible operation programs and available functions. A varistor protects the controller from peak tensions on the mains supply due to, for instance, atmospheric discharges such as thunderbolts. The internal incorporated fuse protects the controller in case of short circuit on the outputs (valves, fan and lockout signal).

OVERALL DIMENSIONS

The following figure shows the controller overall dimensions including connecting sockets (measurement unit: mm).

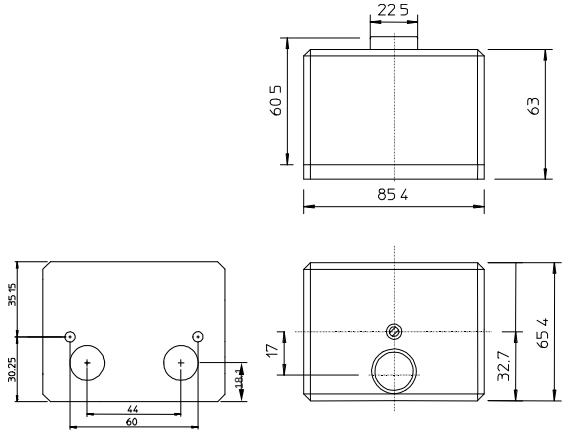

Fig. 1

CONNECTIONS

The accessories as connecting sockets and core hitches are supplied upon request for controller wiring. The following figures show connecting socket type MOG (Fig. 2) and core hitches (Fig. 3).

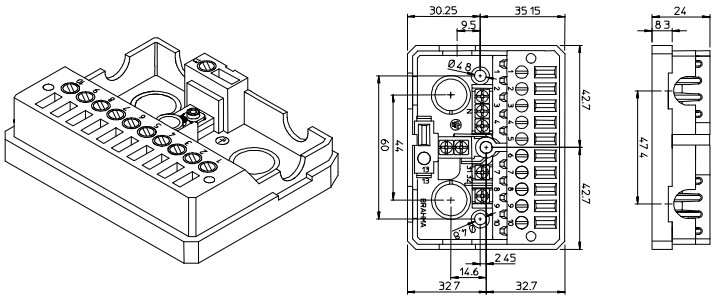

Fig. 2

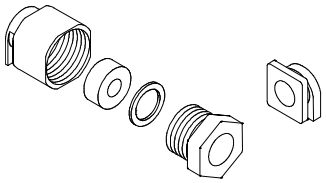

Fig. 3

ACCESSORIES

The following directions are useful to choose the most suitable flame detector for the control box and the used application:

- For VM44G in gas appliances the flame detection occurs through the rectification principle of the flame with electrodes (for the features see relevant technical data). In appliances where the temperature is excessive and so the detection electrode is compromised, it's possible to use sensors FD1-FD2 which detect the flame signal through the ultraviolet radiation it emits (see relevant technical data).
- For VM44O in fuel oil applications, besides sensors FD1-FD2 (usable only in blue flame applications), the Photocells FC11, FC13 or FC14 can be used (see relevant technical data).

In case of using the photodiode FD1-FD2 orientate the sensor towards the flame until maximum possible flame signal is obtained.

The following figures (Fig. 4, 5, 6 e 7) show the various possibilities to choose the best sensor (accessories supplied upon request).

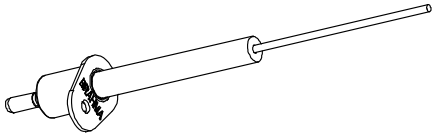

Fig. 4

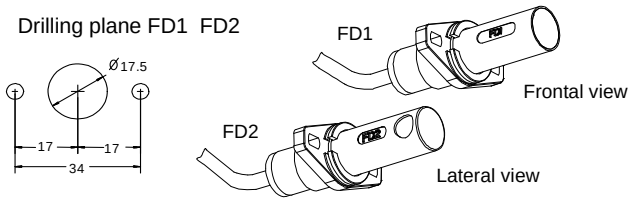

Fig. 5

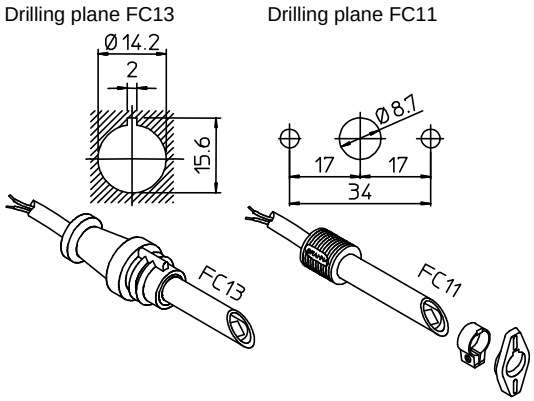

Fig. 6

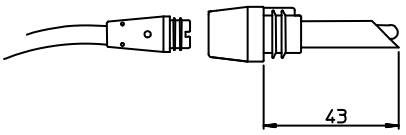

Fig. 7

DIRECTIONS FOR INSTALLATION

- This automatic control box is a safety device and must not be modified. Responsibility and guarantee of the manufacturer will be debarred if the controller is opened by the user.
- The system is designed to stay in running position for less than 24h (system for non-permanent operation). Reaching this limit causes a regulation shutdown in order to allow the controller to check its efficiency.
- The controller must be connected and disconnected to the socket without power supply.
- The controller can be mounted in any position.
- Avoid exposure to dripping water.
- In order to optimize the controller duration it's preferable a quite low ventilation temperature.
- Before installing or replacing the controller, make sure that type, times and code are those required.

ELECTRICAL INSTALLATION

- The applicable national and European standards (EN 60335-1/EN50165) related to the electrical safety must be respected.
- For safety reasons, phase and neutral connections are to be respected.
- The gas versions, supplied with detection electrode, are equipped with a polarity recognition. Not respecting the phase-neutral polarity causes a non volatile lockout at the end of safety time.

- Before starting the system check the wiring carefully. Wrong connections can damage the controller and compromise safety.
- Avoid putting signal detection cables close to power or ignition cables.
- Use a heat resistant detection electrode, well insulated from ground and protected from possible moisture (or water in general).
- This controller is supplied with internal fuses, but it must be protected by a fuse at least on the phase connection (see technical features).

In case of "partial" short circuit or insufficient insulation between phase and earth, tension on detection electrode can be reduced till causing lock out of the controller due to impossibility of detecting the flame signal.

CHECKING AT START

Check the controller before the first start and also after amendments or a long period of no operation of the system. Before any ignition attempt make sure that the combustion chamber is empty, then make sure that:

- if the starting attempt occurs without fuel supply, the controller locks out at the end of the safety time (TS);
- when the fuel flow stops (while the controller is in operation state) the power supply of the solenoid valves is interrupted and, in the standard versions, the controller locks out;
- operating times and cycle are suitable of the controller used;
- the level of the flame signal is high enough (for flame signal test see figure 8 and 9)
- the ignition electrode is adjusted so as to guarantees always a good fuel ignition. Make sure also that it's fixed stably (for more information see the specific technical data of the ignition device);
- the intervention of the regulators, limiters or safety devices causes a shut down of the controller according to the application type .
-

FLAME SIGNAL TEST VM44

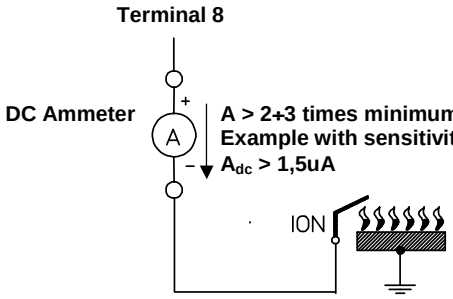

Fig. 8

FLAME SIGNAL TEST VM44O

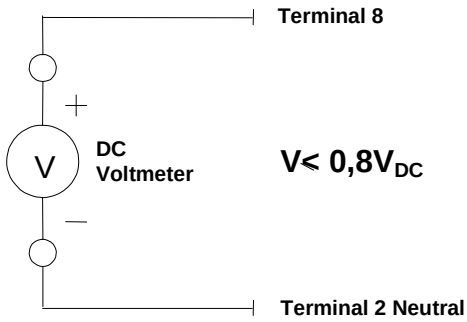

Fig. 9

NOTES FOR THE DISPOSAL OPERATION

The controller contains electronic components and it must not be disposed of as a domestic waste. For the disposal operation refer to the local rules concerning special waste.

OPERATION

Gas versions (VM44G)

The following description refers to the standard operation cycle controllers with air damper command. At every start the controller proceeds to a self-checking of its own components; at the end of the checking operation the fan is power supplied and the command is given to the air damper to go to its maximum opening position. When a sufficient air flow is found (Air Pressure Switch APS closes), the pre-purge time starts; if the air pressure switch doesn't close the controller will go to a lockout condition in 16 seconds. The controller checks the air pressure switch at every cycle start. During the pre-purge time (TP) the flame signal amplifier correct operation is checked. A fault in the amplifier leading to a spurious flame signal will cause the controller to lock out.

At the end of the pre-purge time (TP) the air damper goes to the minimum air flow position (by means of the command of terminal 3); the system remains in this position for 16 seconds (the time is settable according to the air damper switching speed) afterwards the pre-ignition phase starts energizing the ignition device. At the end of the pre-ignition phase the fuel valve EV1 is energized starting the safety time (TS) and the ignition time (TSP). If the flame signal is not detected within the end of safety time (TS), the controller will proceed to the lockout condition, the gas output EV1 will be de-energized, the lockout signal will be activated while the air damper will automatically close (z). In case a flame signal is detected, the controller will close the ignition transformer at the end of the TSP time and at the delay end between the first and second valve, it will open the air damper at the maximum position (by means of the command of terminal 3)and energize the output of the second valve EV2. The controller second stage output is intercepted (in the dual operating applications) by the thermostat TM which interacts with the air damper in order to energize or de-energize the second valve EV2 (controlled, in this case, by the air damper) causing in this way the maximum or minimum air flow opening.

See cycle diagram to better understand its function.

Operation cycle variations of the gas versions

The possible operation cycle variations of the controllers are as follows:

- Option (1) Ignition mode:

In standard mode, the output of ignition device is energized during all the safety time TS. Upon request, with option A, the igniter can be active during all the safety time TS minus the last second. With option B, the igniter remains active till the flame signal is detected.

- Option (2) EV2 opening in flame presence:

In standard mode the second stage (EV2) is energized with 8 second delay from the end of the safety time. Upon request, with option Wnn, nn second delay of the second stage opening is inserted starting from the end of safety time TS. with option W the second stage opens without delay when flame is detected.

- Option (3): Lockout due to parasitic flame:

In standard mode, the controller locks out immediately if flame is found during the pre-purge or pre-ignition time. Upon request, with option Knn, it's possible to modify the delay time into nn seconds. (see paragraph "TECHNICAL FEATURES" for information about the settable times). With option K the controller stops the cycle without going to lockout (no limit, continuous pre-purge).

- Option (4) insufficiency or failure of air flow at start:

In standard mode, the controller locks out if at start no air pressure switch is found within 16 seconds (delay). Upon request, with option Qnn, it's possible to modify the delay time into nn seconds. With option Q the controller goes to a cycle shut down without locking out (without limits, continuous pre-purge).
- Option (5) Air flow failure during ignition or in running
In standard mode, the controller goes to an immediate lockout. Upon request, with option Rnn, it's possible to introduce nn number of re-ignitions due to air pressure switch failure. With option R the controller goes to a recycle without locking out (no limit).
- Option (6) flame failure during operation:
In standard mode, The controller goes to an immediate lockout. Upon request, with option Vnn, it's possible to insert nn number of re-ignitions due to flame failure during operation. With option V the controller goes to a recycle without locking out (no limit).
- Option (7) recycling attempts:
In standard mode, The controller locks out if no flame is detected at the end of safety time TS. Upon request, with option Ynn, it's possible to set nn number of recycling attempts before lockout.
- Option (8) interpurge time:
in standard mode, there is no interpurge. Upon request, with option Inn, it's possible to set nn seconds of pre-purge time during recycles (only in combination with option Ynn).
- Option (9) Air pressure switch checking:
In standard mode, the controller checks the correct operation of the air pressure switch. Upon request, with option G, it's possible to neglect this checking operation. In a standard device the same function can be obtained connecting terminals 6 and 7 with a jumper lead.This option is made for special applications where checking the air flow is not required by the appliance standard.
- Option (10) Pre-ignition:
in standard mode, the ignition transformer is active during the pre-ignition time for 3 seconds (with air damper in minimum opening position). Upon request, with option Jnn, it's possible to modify the pre-ignition time and enable the ignition transformer nn seconds before the beginning of safety time (with air damper in minimum opening position). With option J no pre-ignition is provided.
- Option (11) Communication bus:
the controller is able to transmit data related to the operation in the appliance where it's inserted. With this function it's not possible to modify operation cycle or times.
- Option (12) remote lockout and reset signal:
The lockout output is supplied by a TRIAC. Upon request it's possible to set the SELV optoisolated lockout output or to set the controller without the lockout output and the remote reset input.
- Option (13) Recycle:
In standard mode, the recycles on flame failure (option Vnn) don't depend on the multiple ignition attempts (Option Ynn), for instance if the controller has options V3 and Y5 it accomplishes the following:
3 recycles on flame failure and 5 ignition attempts.
Upon request, with option X, it's possible to set the total attempts, in this case the number of recycles on flame failure and ignition attempts must be the same. For example, if the controller has options V3, Y3 and X it proceeds to maximum 3 recycles:

- 3 recycles on flame failure and 0 ignition attempts, or
- 2 recycles on flame failure and 1 ignition attempt, otherwise
- 1 recycle on flame failure and 2 ignition attempts, otherwise
- 0 recycles on flame failure and 3 ignition attempts.

Oil versions (VM44O)
The following description refers to the standard operation cycle controllers with air damper command. At every start the controller proceeds to a self-checking of its own components and energizes the preheater, at the end of the checking operation and once the preheater thermostat indicates the arrival to the temperature level, the controller energizes the air damper, which goes to its maximum position and immediately after to its minimum position. When minimum position is reached, the burner motor and the ignition transformer are power supplied. During this time the correct operation of the flame signal amplifier is checked. A fault in the amplifier leading to a spurious flame signal will cause the controller to lockout within 10 seconds. If the preheater thermostat opens during the pre-purge time, the air damper returns to the closed position de-energizing the burner motor and the ignition transformer; this condition remains till the preheater thermostat is closed; in a contrary case the controller proceeds to a lockout in 10 minutes. At the end of the pre-purge time (TP) valve EV1 is power supplied, thus begins the safety time (TS) and the ignition time (TSP). If no flame is detected within the end of safety time (TS), the controller goes to a lockout; the EV1 valve, the ignition transformer and the motor are de-energized, the air damper goes to its closed position and the lockout signal is activated. In a contrary case , at the end of Safety Time TS, the controller shuts down the ignition transformer and energizes the second stage output. The air damper proceeds to its maximum position through the modulation thermostat closure and energizes the second valve EV2 , otherwise through the modulation thermostat opening, the air damper proceeds to its minimum position without energizing the second valve EV2. In the standard versions it is permissible the flame signal failure in operational state for 3 times (recycle in case of flame failure in running position); afterwards the controller proceeds to lockout.
See cycle diagrams to better understand the operation of the single devices.
Operation cycle variation of the oil versions
The possible cycle variations of the devices are as follows:
- Option (1) Ignition mode:
In standard mode, the ignition device output is energized during all the safety time TS. Upon request, with option A, the igniter can be active during all the safety time TS minus the last second. With option B, the igniter remains active till the flame signal is detected.
- Option (2) EV2 opening in flame presence:
in standard mode, the second stage (EV2) is energized at the end of safety time. Upon request, with option Wnn, nn second delay of the second stage opening is introduced starting from the end of safety time TS. With option W the second stage opens without delay in flame presence.
- Option (3) lockout due to parasitic light:
In standard mode, the controller goes to lockout if no flame is detected for 10 seconds during the pre-purge time. Upon request, with option Knn, it is possible to modify the delay time into nn seconds. (see paragraph "TECHNICAL FEATURES" for information about settable times). With option K the controller goes to a cycle shut down without locking out (no limit, continuous pre-purge stage).
- Option (4) Preheater thermostat failure at start:
In standard mode, the controller goes to lockout if at start the preheater thermostat is not detected within 10 seconds. Upon request, with option Qnn it is possible to modify the delay time. With option Q the controller goes to a cycle shut down without locking out (no limit, continuous pre-purge stage).
- Option (5) Flame failure in running position:
In standard mode, the controller goes to lockout at the third re-ignition on flame failure. Upon request, with option Vnn, it is possible to modify the re-ignition number into nn otherwise an immediate lockout (Option V0). With option V the controller goes to cycle shut down without locking-out (no limit).
- Option (6) Recycle attempts:
In standard mode, the controller locks out if no flame is detected at the end of safety time TS. Upon request, with option Ynn, it is possible to set nn attempts number of recycle before lockout.
- Option (7) interpurge time:

In standard mode there is no interpurge. Upon request, with option Inn, it is possible to set nn seconds of pre-purge time, during recycles (only in combination with option Ynn).
- Option (8) Pre-ignition:
In standard mode, the ignition transformer is activated during the pre-purge time. Upon request, with option Jnn, it is possible to modify the pre-ignition time and energize the ignition transformer nn seconds before the beginning of safety time. With option J no pre-ignition is provided.
- Option (9) Communication bus:
The controller is able to transmit data related to the operation of the appliance where it is inserted. With this function it is not possible to modify operation cycle or times.
- Option (10) Remote lockout and reset signal:
The lockout output is supplied by a TRIAC. Upon request it's possible to set the SELV optoisolated lockout output or to set the controller without the lockout output and the remote reset input.
- Option (11) Postignition:
In standard mode, the ignition transformer is shut off at the end of safety time TS. Upon request, with option Tnn, it's possible to set a postignition time and keep activated the ignition transformer for nn seconds after the end of safety time TS.
- Option (12) Recycle:
In standard mode, the recycles on flame failure (option Vnn) don't depend on the multiple ignition attempts (Option Ynn), for instance if the controller has options V3 and Y5 it accomplishes the following:

- 3 recycles on flame failure and 5 ignition attempts.

Upon request, with option X, it's possible to set the total attempts, in this case the number of recycles on flame failure and ignition attempts must be the same. For example, if the controller has options V3, Y3 and X it proceeds to maximum 3 recycles:

- 3 recycles on flame failure and 0 ignition attempts, or
- 2 recycles on flame failure and 1 ignition attempt, otherwise
- 1 recycle on flame failure and 2 ignition attempts, otherwise
- 0 recycles on flame failure and 3 ignition attempts.

CONTROLLERS RESET
When the controller proceeds to a volatile lockout, it is possible to reset immediately the system pressing the reset button till the lockout signal is shut off (this condition occurs in about a second when ambient thermostat is closed, it's not possible to reset the system while ambient thermostat is open).

ERROR DIAGNOSTIC
If the controller is in lockout condition while the ambient thermostat is closed, the diagnostic routine is energized, by pressing for about 5 seconds the reset button, visualizing the reason behind the lockout condition. When the same button is pressed again it resets the controller and thus the diagnostic routine ends. The following table shows the description of the diagnostic messages through the red led blinking:

Read Led blinking no.	**Description**
2	Flame failure at the end of TS
3	Air pressure switch failure to close (VM44G) Air damper does not reach the opening position (VM44O)
4	Air pressure switch failure to open (VM44G) Preheater thermostat failure to close (VM44o)
5	Extranious light/Flame simulation at start
6	Air pressure switch failure in running position
7	Flame failure in running position
9-14	Internal fault

SIGNALS DURING OPERATION
In the various operation conditions the controller is able to signal the operation state through a multicolored LED which changes color according to the lockout signal occurred. The colors legend is as follows:

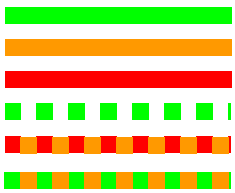

Stable green
Stable orange
Stable red
Blinking green
Low voltage signal
Alarm of low flame signal in running position

The interpretation of all the possible signals is shown in the cycle diagrams. In case the power supply voltage goes under the minimum operation value, the system indicates this type of anomaly by a red color which alternates with orange.

SERIAL INTERFACE
In the various operation conditions the controller is able to send information through RS232 communication protocol. The information is transferred through an appropriate connection (Outputs OUT, REF) and interpreted by an interface PC program. The controller output terminals (OUT, REF) are not galvanically isolated, therefore it's necessary to use an interface circuit able to guarantee the insulation. The possible insulation diagram is as follows:

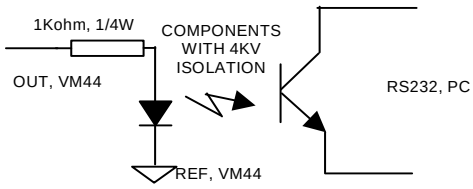

CONTROLLERS DENOMINATION (GAS VERSIONS)

Type Options
VM44G (1) (2) (3) (4) (5) (6) (7) (8) (9) (10) (11) (12) (13)

Model description
G: Controller for forced draught gas appliances (Eurogas series)

Options description:
(1) Ignition mode:
- **No letter**: ignition spark operates during TSP = TS. Standard mode.
- **A** : ignition spark operates during TSP = TS-1.
- **B**: ignition spark shuts off when flame is detected.

(2) EV2 opening in flame presence:
- **No letter**: 8 second delay. Standard mode
- **W**: without delay
- **Wnn**: delayed (see paragraph TECHNICAL FEATURES)

(3) Lockout due to parasitic flame:
- **No letter**: lockout without delay. Standard mode
- **K**: cycle shut down, without lockout (no limit, continuous pre-purge condition)
- **Knn**: lockout with delay (see paragraph TECHNICAL FEATURES)

(4) Failure or insufficiency of air flow at start:
- **No letter**: Lockout in 16 seconds. Standard mode.
- **Q**: Cycle shut down, without lockout (no limit, continuous pre-purge condition)
- **Qnn**: Lockout in nn seconds, set upon request (see paragraph TECHNICAL FEATURES)

(5) Air flow failure during ignition or in running position:
- **No letter**: Immediate lockout on air flow failure in running position (air pressure switch failure). Standard mode
- **R**: recycle, without lockout (no limit).
- **Rnn**: multiple reignition attempts due to air pressure switch failure, set upon request (see paragraph TECHNICAL FEATURES)

(6) Flame failure in running position:
- **No letter**: immediate lockout. Standard mode.
- **V**: recycle, without lockout (no limit).
- **Vnn**: lockout after nn recycle attempts (see paragraph TECHNICAL FEATURES).

(7) Recycle attempts:
- **No letter**: lockout without recycle attempt. Standard mode.
- **Ynn**: multiple recycle attempts upon request (see paragraph TECHNICAL FEATURES).

(8) Interpurge time:
- **No letter**: No inter-waiting or interpurge time. Standard mode.
- **Inn**: inter-waiting or interpurge time is set upon on request

(9) Air pressure switch checking:
- **No letter**: air pressure switch checking
- **G**: without pressure switch checking

Note: The controllers equipped with option “G” are made for special applications where checking the air flow is not required by the appliance standard

(10) Pre-ignition:
- **No letter**: 3 second pre-ignition. Standard mode.
- **J**: no pre-ignition. Jnn: nn seconds of pre-ignition is set upon request (see paragraph TECHNICAL FEATURES).

(11) Communication bus:
- **No letter**: no serial connection bus. Standard mode
- **Z**: serial communication system.

(12) Remote lockout and reset signal:
- **No letter**: high voltage lockout output signal by TRIAC. Standard mode.
- **H1**: low voltage lockout signal by LED.
- **H2**: no lockout signal and no remote reset.

(13) Recycle:
- **No letter**: opt. Vnn and opt. Ynn with independent attempts. Standard mode.
- **X**: option Vnn and option Ynn with non-independent attempts (see paragraph TECHNICAL FEATURES).

Example:
VM44G J3 V3 Z ⇒ The specifications of this controller are as follows:
J3: 3 second pre-ignition
V3: 3 recycles on flame failure
Z: serial communication

Classification code according to EN298:
VM44G OPZ. Vnn : FTCLXN

CONTROLLERS DENOMINATION (OIL VERSIONS)

Type Options
VM44O (1) (2) (3) (4) (5) (6) (7) (8) (9) (10) (11) (12)

Model description
O: Controller for fuel oil appliances (Eurooil series)

Options description:
(1) Ignition mode:
- **No letter**: ignition spark operates during TSP = TS. Standard mode.
- **A** : ignition spark operates during TSP = TS-1.
- **B**: ignition spark shuts off when flame is detected.

(2) EV2 opening in flame presence:
- **No letter**: In running position. Standard mode
- **W**: without delay
- **Wnn**: delayed (see paragraph TECHNICAL FEATURES)

(3) Lockout due to parasitic light:
- **No letter**: lockout with 10 second delay. Standard mode
- **K**: cycle shut down, without lockout (no limit, continuous prepurge)
- **Knn**: lockout with nn delay (see paragraph TECHNICAL FEATURES)

(4) Preheater thermostat failure at start:
- **No letter**: Lockout with 10 min. delay. Standard mode.
- **Q**: Cycle shut down, without lockout (no limit, continuous prepurge)
- **Qnn**: Lockout with nn second delay (see paragraph TECHNICAL FEATURES)

(5) Flame failure in running position:
- **No letter**: lockout after 3 recycles. Standard mode
- **V**: recycle, without lockout (no limit).
- **Vnn**: lockout after nn recycle attempts (see paragraph TECHNICAL FEATURES).

(6) Recycle attempts:
- **No letter**: lockout without recycle. Standard mode.
- **Ynn**: multiple recycle attempts upon request (see paragraph TECHNICAL FEATURES).

(7) Interpurge time:
- **No letter**: No interwaiting or interpurge time. Standard mode.
- **Inn**: waiting or purge intertime is set upon request

(8) Pre-ignition:
- **No letter**: pre-ignition during all the pre-purge time. Standard mode.
- **J**: no pre-ignition.
- **Jnn**: nn seconds of pre-ignition is set upon request (see paragraph TECHNICAL FEATURES).

(9) Communication bus:
- **No letter**: no serial connection bus. Standard mode
- **Z**: serial communication system.

(10) Remote lockout and reset signal:
- **No letter**: high voltage lockout output signal by TRIAC. Standard mode.
- **H1**: low voltage lockout signal by LED.
- **H2**: no lockout signal and no remote reset.

(11) Post-ignition:
- **No letter**: no post-ignition. Standard mode.
- **Tnn**: nn seconds of post ignition is set upon request (see paragraph TECHNICAL FEATURES).

(12) Recycle:
- **No letter**: opt. Vnn and opt. Ynn with independent attempts. standard mode.
- **X**: opt. Vnn and opt. Ynn with non-independent attempts (see paragraph TECHNICAL FEATURES).

Example:
VM44O J3 Y3 ⇒ The specifications of this controller are as follows:
J3: 3 second pre-ignition
Y3: 3 recycles on flame failure at the end of safety time TS
Opt. Y3 : 3 recycles, 4 ignition attempts
Opt. Yn : n recycles, n + 1 ignition attempts

VM44O V0 ⇒ **The specifications of this controller are as follows:**
V0= immediate lockout on flame failure in running position

Classification code according to EN230:
VM44O OPZ. V0: FTLLXN

WIRING DIAGRAMS

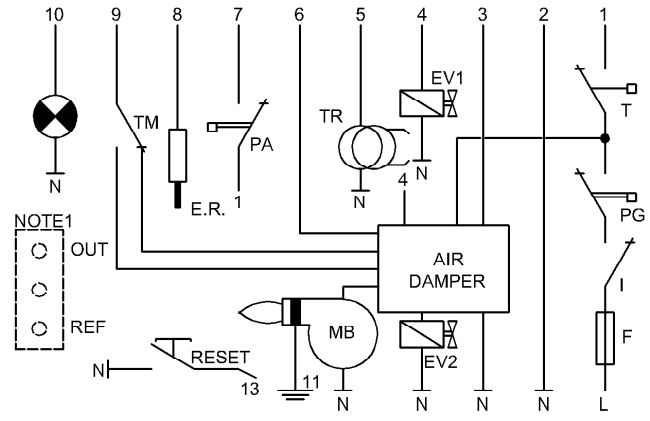

VM44G WITH DAMPER AND A MODULATION THERMOSTAT WITH 2 WIRES

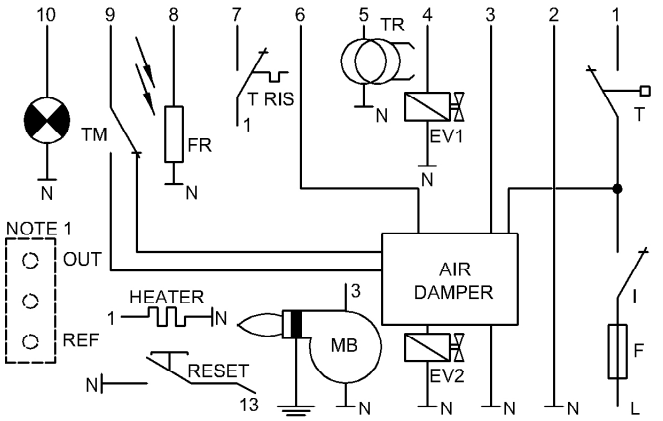

VM44O WITH DAMPER AND A MODULATION THERMOSTAT WITH 2 WIRES

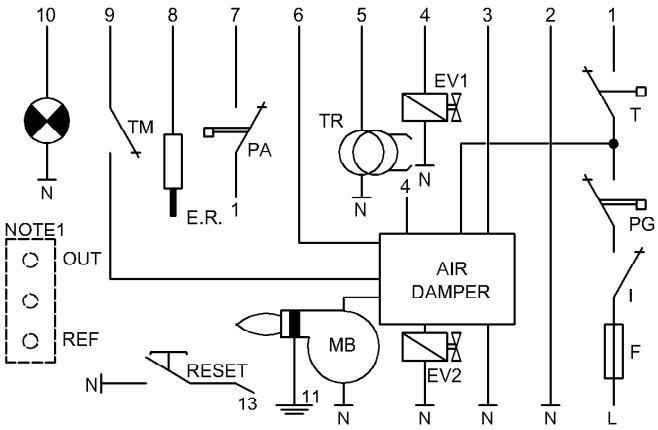

VM44G WITH DAMPER AND A MODULATION THERMOSTAT WITH 1 WIRE

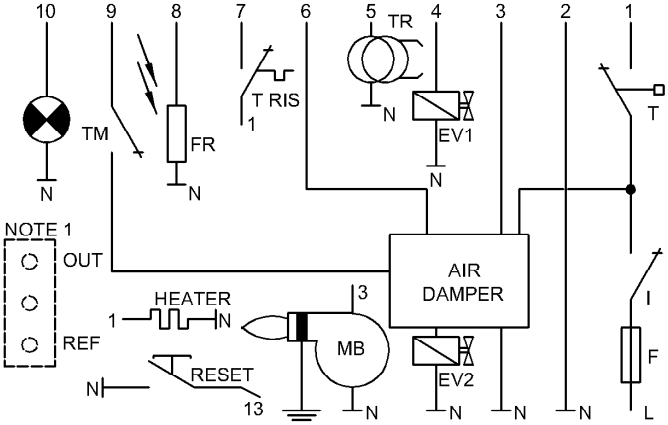

VM44O WITH DAMPER AND A MODULATION THERMOSTAT WITH 1 WIRE

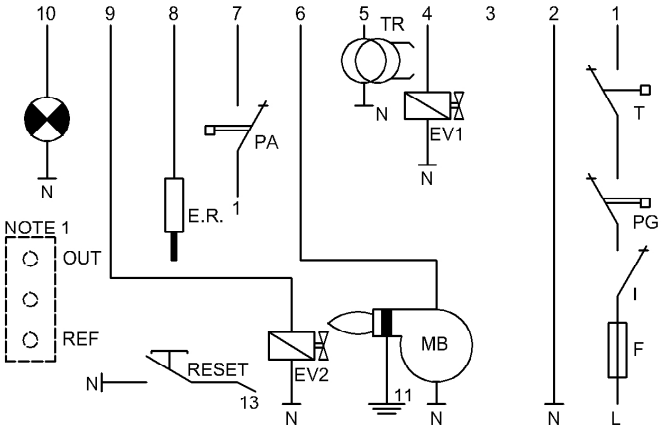

VM44G WITHOUT DAMPER

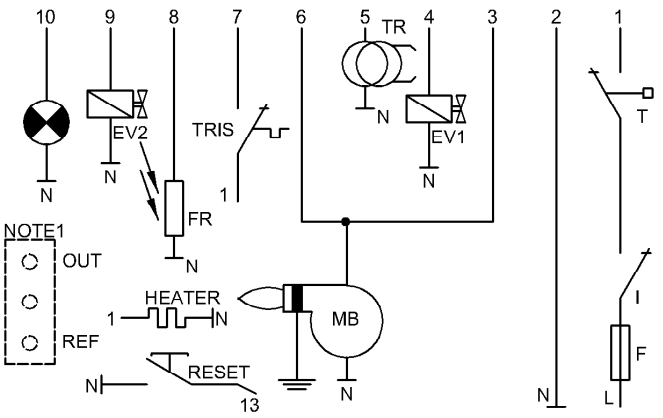

VM44O WITHOUT DAMPER

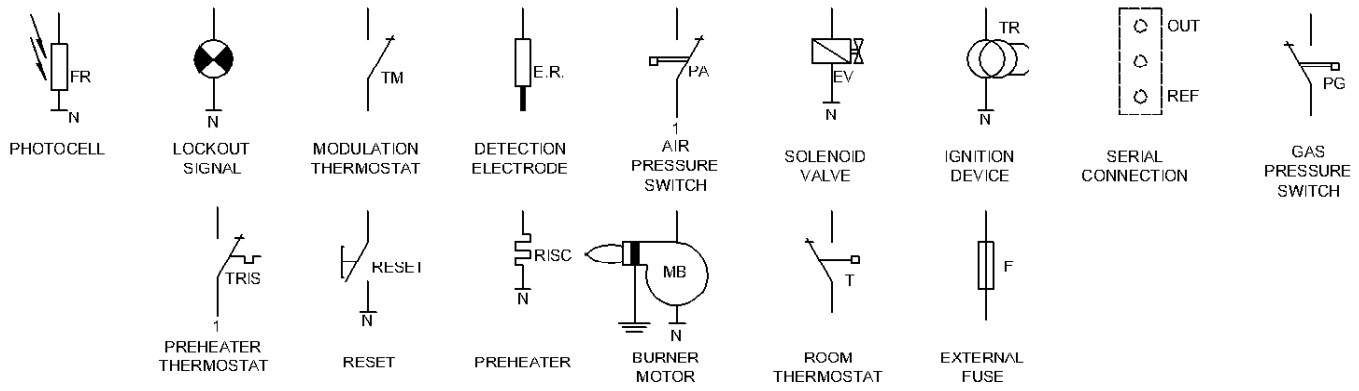

NOTE 1 The serial communication is found in the controllers equipped with option Z.

OPERATING CYCLES

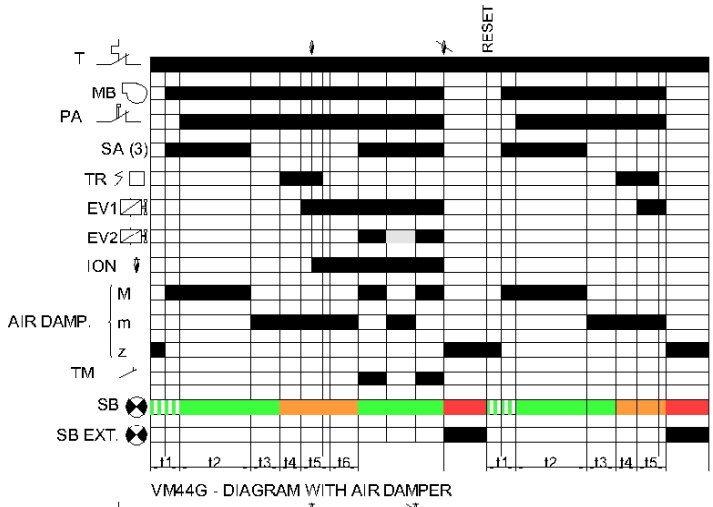

VM44G - DIAGRAM WITH AIR DAMPER

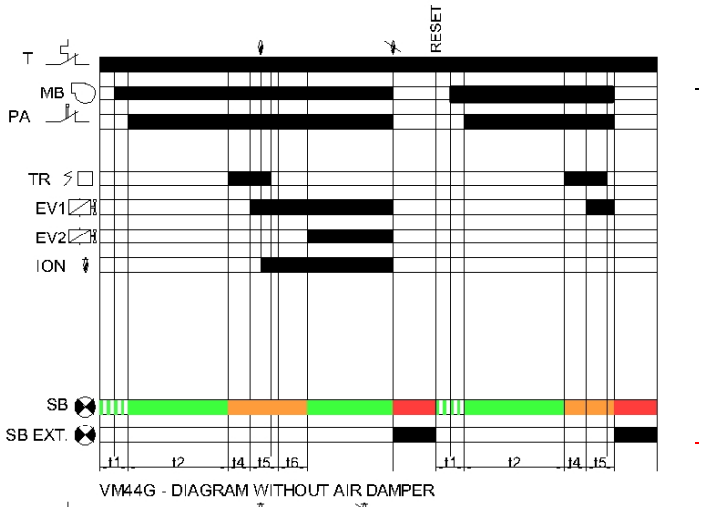

VM44G - DIAGRAM WITHOUT AIR DAMPER

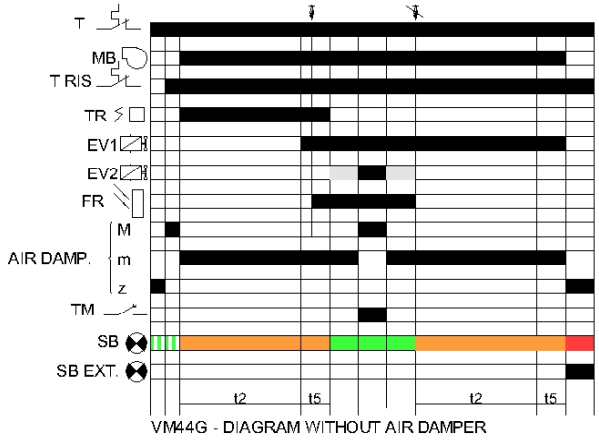

VM44G - DIAGRAM WITHOUT AIR DAMPER

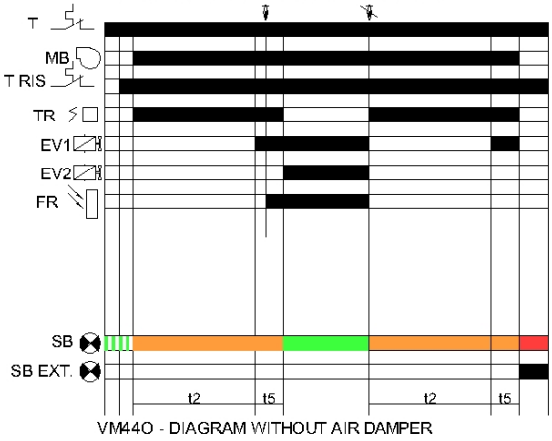

VM44O - DIAGRAM WITHOUT AIR DAMPER

SYMBOLS LEGEND

T ROOM THERMOSTAT

MB BURNER MOTOR

PA AIR PRESSURE SWITCH

SA (3) AIR DAMPER CONTROL OUTPUT

TR IGNITION DEVICE

EV GAS/OIL VALVE

FR PHOTOCELL

ION FLAME DETECTION SIGNAL

AIR DAMP.
- M MAXIMUM OPENING
- m MINIMUM OPENING
- z CLOSED DAMPER

TM RUNNING FLAME ADJUSTMENT

SB LOCKOUT SIGNAL ON BOARD

SB EXT. EXTERNAL LOCKOUT SIGNAL

T RIS PREHEATER THERMOSTAT

Gas versions
t1= waiting time for maximum opening position of air damper and air pressure switch commutation;
t2= pre-purge time (with maximum opening position of air damper in the versions which entail its connection);
t3= pre-purge time with air damper in minimum position;
t4= pre-ignition time;
t5= safety time;
t6= response time between first and second valve;

Oil versions
t2= prepurge-preignition time;
t5= safety time;

NOTE
In the versions supplied with air damper connection, the controller frees the outputs for the motor and the second valve which are managed by the air damper. The gray indication in the diagram shows that the controller keeps the second stage output energized but the air damper goes to its minimum position and de-energizes the second valve.

AVAILABLE OPTIONS

DIAGRAM N°1

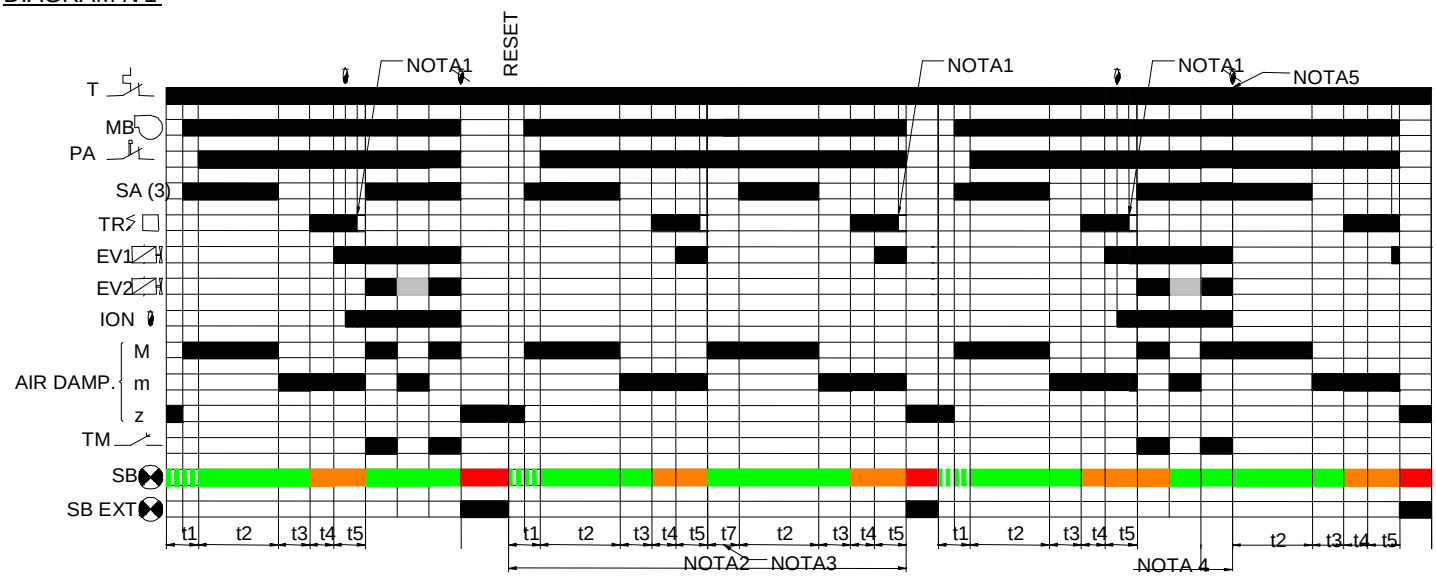

DIAGRAM N°2

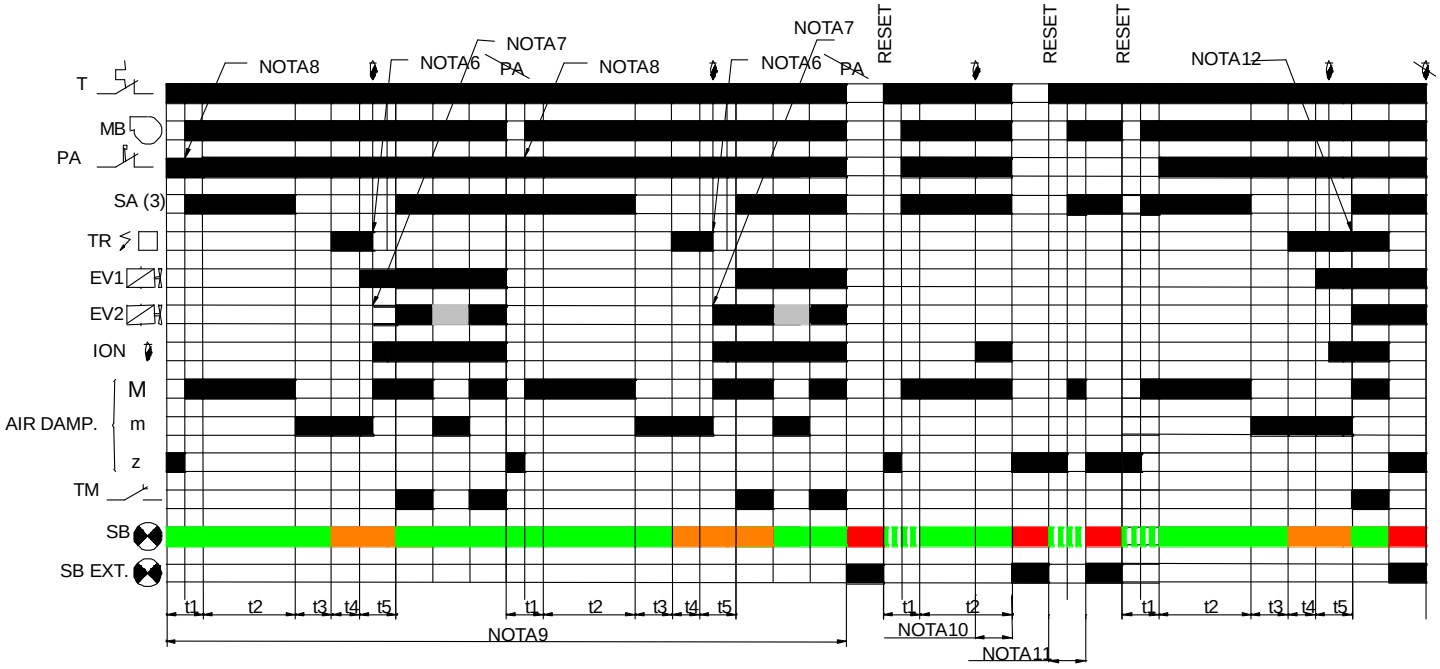

NOTES:

Note 1 Indication of option A, ignition spark operates during TSP = T5-1;

Note 2 Indication of option Ynn. Attempts number is settable upon request, lock-out at the end of nn attempts;

Note 3 Indication of option Inn. nn seconds of inter-purge is settable upon request;

Note 4 with option Ynn, the controller checks air pressure switch only at start but not during recycles;

Note 5 Indication of option Vnn, the controller goes to lock-out at the end of the nn attempts or immediately (option V0) due to flame failure in running position.

Note 6 Indication of option B, ignition spark shuts off once flame is detected;

Note 7 Indication of option Wnn, the controller energizes the second stage with nn second delay or immediately at the end of safety time T5 (option W0);

Note 8 Indication of option G, no air pressure switch checking (only VM44G)

Note 9 Indication of option Rnn, the controller goes to lock-out at the end of the nn attempts or immediately (option R0) due to air pressure switch failure during ignition or in running position.

Note 10 Indication of option Knn, the controller goes to nn delay lock-out, or immediate lock-out (option K0) due to parasitic flame at start;

Note 11 Indication of Option Qnn, the controller goes to nn second delay lock-out on air pressure switch failure to close (gas versions VM44G) or preheater thermostat failure to close (Oil versions VM44O);

Note 12 Indication of option Tnn (only oil versions VM44O), the controller keeps the ignition transformer energized at the end of TS for nn seconds settable time upon request.

LEGEND OF ABBREVIATIONS

E.R.: detection electrode
EV1: valve 1
EV2: valve 2
FR: photocell
F: fuse
ION: flame detection signal
MB: burner motor
PA: air pressure switch
PG: gas pressure switch
PT: total range
PTEV: total maximum range of valve
RISC: preheater
SA: air damper control output
SB: lockout signal on board
SB EXT: external lockout signal
T: room thermostat
TM: modulation thermostat
TP: prepurge time
TR: ignition device
T RIS: preheater thermostat
TS: safety time
TSP: ignition time

ATTENTION-> Company Brahma S.p.A. declines any responsibility for any damage resulting from the Customer's interfering with the device

BRAHMA S.p.A.
Via del Pontiere, 31/32
37045 Legnago (VR) - ITALY
Tel. +39 0442 635211 - Telefax +39 0442 25683
http://www.brahma.it
E-mail : brahma@brahma.it

2011/06/07 Subject to amendments without notice

ПРОМЭЛЕКТРОНИКА / sales@prom-elec.com