Honeywell

krom schroder

Burner control unit PFU 760

TECHNICAL INFORMATION

- For directly ignited burners of unlimited capacity in intermittent operation or in continuous operation pursuant to EN 746-2
- Flame control by UV, ionization or a further option of using the furnace chamber temperature
- Display of the program status, device parameters and flame signal; Manual mode for burner adjustment and for diagnostic purposes
- Visualization and adaptation to the specific application via the PC programming and diagnostic software BCSoft to simplify logistics management
- Air valve control relieves the furnace control
- Connection to PROFIBUS DP via fieldbus interface PFA



EN
Edition 05.25
03250721

ПРОМЭЛЕКТРОНИКА / sales@prom-elec.com

Contents

Contents 2

1 Application 4

1.1 Application examples 6
1.1.1 Staged On/Off burner control 6
1.1.2 Staged High/Low burner control 6
1.1.3 Two-stage-controlled burner 7
1.1.4 Modulating-controlled burner 7
1.1.5 PFU for PROFIBUS DP with PFA 700 8
1.1.6 Flame control using the temperature 8

2 Certification 9

2.1 Certificate download 9
2.2 Certified pursuant to SIL 9
2.3 EU certified 9
2.4 FM approved 9
2.5 AGA approved 9
2.6 UKCA certified 9
2.7 Eurasian Customs Union 9

3 Function 10

3.1 Connection diagram 10
3.1.1 PFU 760 10
3.1.2 PFU 760..K1 11
3.1.3 PFU 760..K2 12
3.2 Program sequence 13

4 BCSoft 14

5 Program step/status 15

5.1 Fault messages 16

6 Parameter 17

6.1 Scanning the parameters 18
6.2 Flame control 18
6.2.1 Burner flame signal 18
6.2.2 Program status when the most recent fault occurred . . 18
6.2.3 Switch-off threshold of the flame amplifier 18
6.2.4 High temperature operation 19
6.2.5 UVS check 22
6.3 Behaviour in start-up position/standby 23
6.3.1 Flame simulation check in start-up position/standby . . . 23
6.3.2 Minimum burner pause time t_{BP} 24
6.4 Behaviour during start-up 25
6.4.1 Burner start-up attempts 25
6.4.2 Minimum operating time t_B 26
6.4.3 Safety time on start-up t_{SA} 26
6.4.4 Flame proving period t_{FS} 26
6.5 Behaviour during operation 27
6.5.1 Safety time during operation t_{SB} 27
6.5.2 Restart 28
6.6 Switchable gas valve V2 on PFU..L 29
6.7 Air valve control PFU..L 30
6.7.1 Purge 30
6.7.2 Cooling in start-up position/standby 30
6.7.3 Air valve during operation 30
6.7.4 Air valve can be activated externally on start-up 33
6.7.5 Air valve in the event of malfunction 33
6.7.6 Low fire over-run 34
6.8 Manual mode 35
6.8.1 Manual mode limited to 5 minutes 35
6.9 Password 36
6.10 Multi-flame control 37

7 Selection 38

7.1 ProFi 38
7.2 Selection table 38
7.3 Type code 38

8 Project planning information 39

8.1 Cable selection 39
8.1.1 Ignition cable 39
8.1.2 Ionization cable 39
8.1.3 UV cable 39
8.2 Spark electrode 39
8.2.1 Electrode gap 39

8.2.2 Star electrodes . . . 39
8.3 Minimum operating time . . . 40
8.4 Safety interlocks (limits) . . . 40
8.5 Emergency stop . . . 40
8.5.1 In the event of fire or electric shock . . . 40
8.5.2 Via the safety interlocks (limits) . . . 40
8.6 Reset . . . 40
8.6.1 Parallel reset . . . 40
8.6.2 Permanent remote reset . . . 40
8.6.3 Automatic remote reset (PLC) . . . 40
8.6.4 Burner start . . . 41
8.6.5 Restart and start-up attempts . . . 41
8.7 Fault signal . . . 41
8.8 Overload protection . . . 41
8.9 Installation . . . 41
8.10 Electrical connection . . . 41
8.10.1 UVS sensor wiring . . . 42
8.11 PFU switched off . . . 42
8.12 Furnace control . . . 42
8.13 Note on EC-type examination . . . 42
8.14 Mains switch . . . 42
8.15 Changing parameters . . . 43
8.16 Calculating the safety time t_{SA} . . . 43
9 Flame control . . . 44
9.1 With flame rod . . . 44
9.2 With UV sensor . . . 44
9.3 Via the temperature in high temperature equipment 44
10 Accessories . . . 45
10.1 High-voltage cable . . . 45
10.2 BCSoft . . . 45
10.2.1 Opto-adapter PCO 200 . . . 45
10.3 Stickers for labelling . . . 45
10.4 “Changed parameters” stickers . . . 45
10.5 Radio interference suppressed terminal boots . . . 46
10.6 Socket connectors . . . 46
10.7 Module subrack . . . 46
10.8 Power supply PFP 700 . . . 47
10.9 Fieldbus interface PFA 700 . . . 48
11 Technical data . . . 49
11.1 Dimensions . . . 50
11.2 Operating controls . . . 50
11.3 Safety-specific characteristic values for SIL . . . 51
12 Maintenance cycles . . . 52
13 Legend . . . 53
14 Glossary . . . 54
14.1 Waiting time t_W . . . 54
14.2 Safety time on start-up t_{SA} . . . 54
14.3 Ignition time t_Z . . . 54
14.4 Flame simulation/Flame simulation delay time t_{LV} . . . 54
14.5 Safety time during operation t_{SB} . . . 55
14.6 Flame signal . . . 55
14.7 Fault lock-out . . . 55
14.8 Warning signal . . . 55
14.9 Safety interlocks (Limits) . . . 55
14.10 Pilot gas valve V1 . . . 55
14.11 Main gas valve V2 . . . 56
14.12 Continuous operation . . . 56
14.13 Air valve . . . 56
14.14 Diagnostic coverage DC . . . 56
14.15 Mode of operation . . . 56
14.16 Safe failure fraction SFF . . . 56
14.17 Probability of dangerous failure PFH_D . . . 56
14.18 Mean time to dangerous failure $MTTF_d$ . . . 56
For more information . . . 57

1 Application



Burner control unit PFU 760 controls, ignites and monitors gas burners in intermittent or continuous operation. As a result of its fully electronic design, it reacts quickly to various process requirements and is therefore also suitable for frequent cycling operation.

The PFU 760 can be used for directly ignited industrial burners. The burners may be modulating-controlled or stage-controlled.

On industrial furnaces, the PFU 760 reduces the load on the central furnace control by taking over tasks that only relate to the burner, for example it ensures that the burner always ignites in a safe condition after it has been restarted.

The burner control unit is used for burners with mechanical combustion air supply where the fan is controlled by a separate logic and for atmospheric burners.

The air valve control PFU 760L assists the furnace control for cooling, purging and capacity control tasks.

The program status, the device parameters and the level of the flame signal can be read directly from the unit. Pilot and main burners can be controlled manually for commissioning and diagnostic purposes.

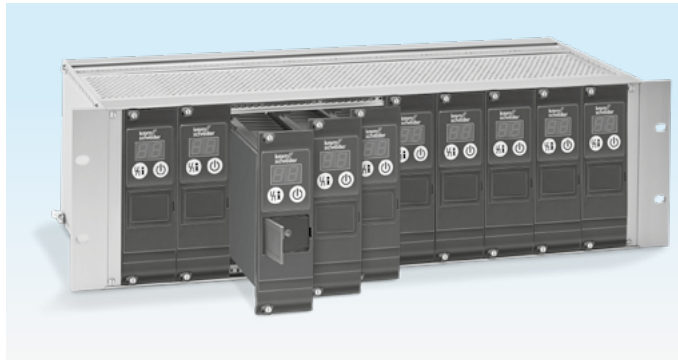

Module subrack BGT for instance serves to accommodate several function units. It is provided with a backplane with screw terminals for simple, reliable wiring.

If the local requirements on the burner control unit change, the device parameters can be adjusted to the application via the optical interface using the PC software BCSoft.

To support service personnel, BCSoft offers a convenient visualization system of the input and output signals and the fault history.

To reduce the installation and wiring costs, the fieldbus interface PFA 700 can optionally be used to transfer the control signals and feedbacks via PROFIBUS DP.



Bogie hearth forging furnace in the metallurgical industry



Walking beam furnace with overhead firing

1.1 Application examples

1.1.1 Staged On/Off burner control

The burner can be started with reduced capacity.

A UV sensor monitors the flame signal from the burner. UV sensor UVC 1 is used for continuous operation, UV sensor UVS for intermittent operation.

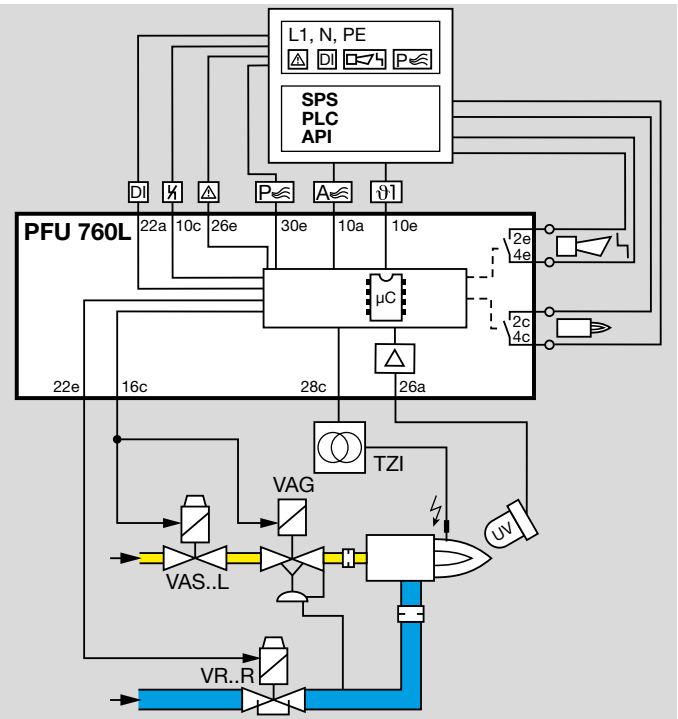

1.1.2 Staged High/Low burner control

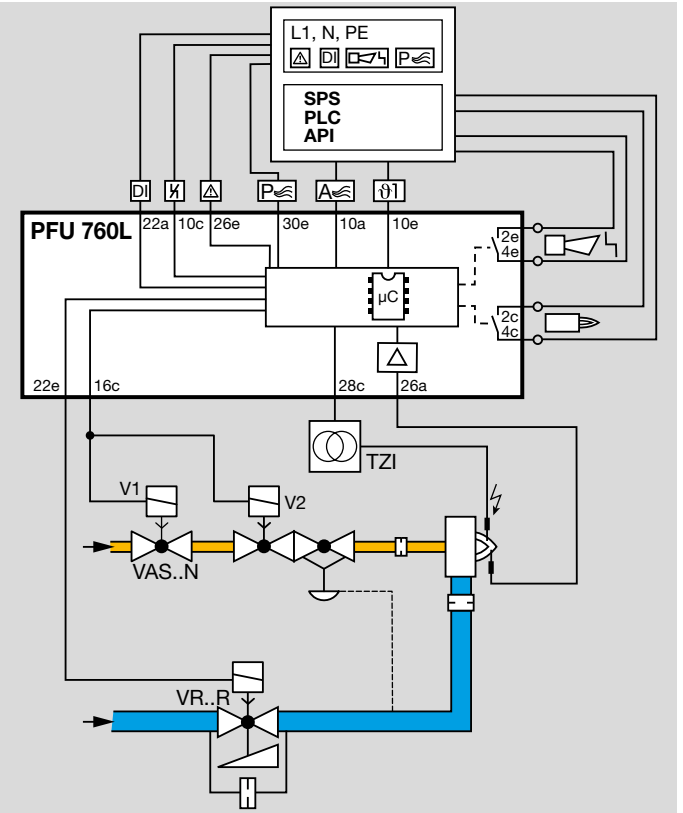

The burner starts at low-fire rate. When the operating state is reached, the PFU 760L issues the controller enable signal. The PLC can now pulse the air valve in order to control the burner capacity.

1.1.3 Two-stage-controlled burner

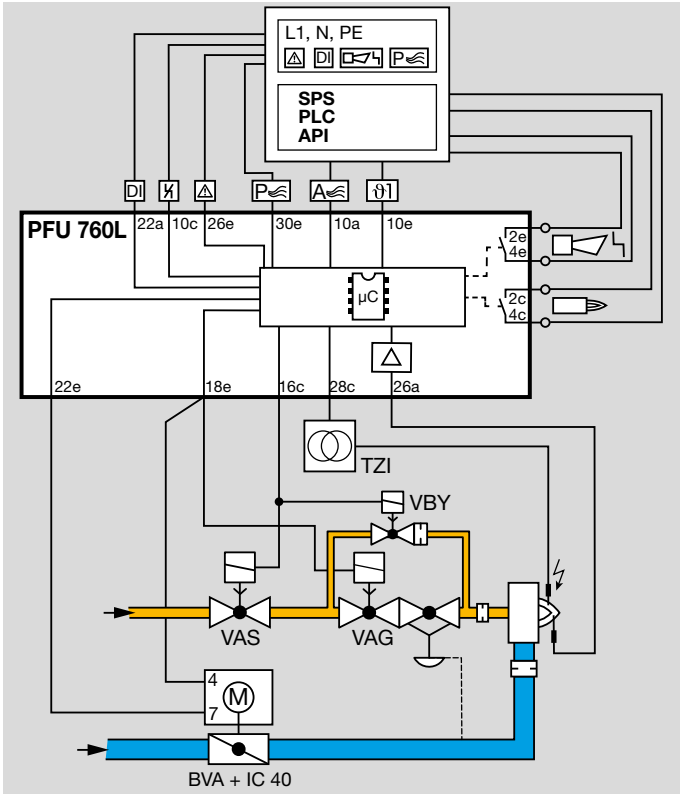

Control: ON/OFF with ignition via bypass

The burner starts at low-fire rate. When the operating state is reached, the PFU 760L issues the enable signal for the maximum burner capacity.

1.1.4 Modulating-controlled burner

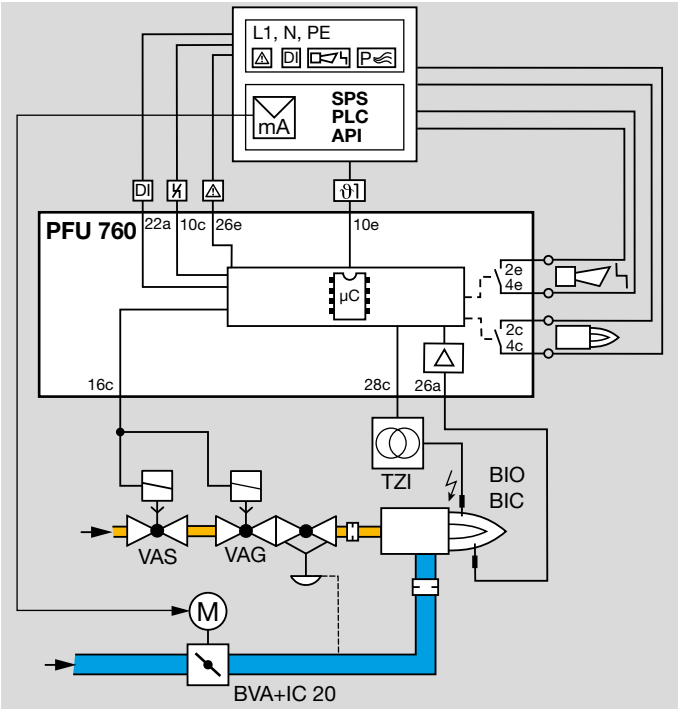

Control: continuous

The external control system moves the butterfly valve for air BVA to ignition position. The burner starts at low-fire rate, and a controller in the PLC controls the burner capacity via the butterfly valve for air BVA after the operating state has been signalled.

1.1.5 PFU for PROFIBUS DP with PFA 700

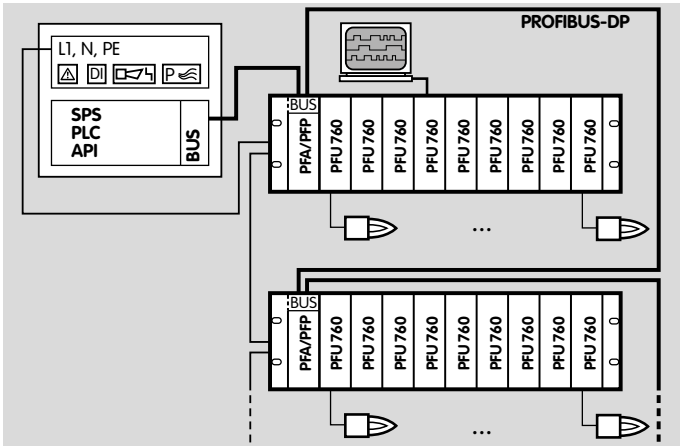

The bus system transfers the control signals for starting, resetting and for controlling the air valve from the control system (PLC) to the PFU 760 via the PFA 700. In the opposite direction, it sends information on the operating status. Control signals that are relevant for safety, such as the safety interlocks and digital input, are transferred independently of the bus communication by separate cables.

1.1.6 Flame control using the temperature

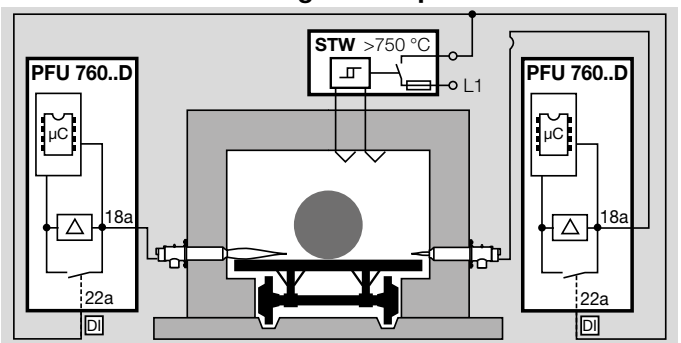

In high temperature systems (temperature > 750°C), the flame may be controlled indirectly via the temperature. As long as the temperature in the furnace chamber is below 750°C, the flame must be controlled by conventional methods.

If the temperature in the furnace chamber rises above the spontaneous ignition temperature of the gas/air mixture (> 750°C), the safety temperature monitor (STM) takes over the indirect flame control.

ПРОМЭЛЕКТРОНИКА / sales@prom-elec.com

2 Certification

2.1 Certificate download

Certificates – see www.docuthek.com

2.2 Certified pursuant to SIL

For systems up to SIL 3 pursuant to EN 61508.

2.3 EU certified

- 2014/35/EU (LVD), Low Voltage Directive
- 2014/30/EU (EMC), Electromagnetic Compatibility Directive
- (EU) 2016/426 (GAR), Gas Appliances Regulation
- 2015/863/EU – RoHS III
- EN 298:2012
- EN 61508:2002, suitable for SIL 3

2.4 FM approved

(PFU..T only)

Factory Mutual Research Class: 1997.

Suitable for applications pursuant to NFPA 86.

www.approvalguide.com

2.5 AGA approved

Australian Gas Association, Approval No.: 5597

www.aga.asn.au

2.6 UKCA certified

Gas Appliances (Product Safety and Metrology etc. (Amendment etc.) (EU Exit) Regulations 2019)

BS EN 298:2012

2.7 Eurasian Customs Union

The products PFU 760 meet the technical specifications of the Eurasian Customs Union.

3 Function

3.1 Connection diagram

Cable selection and wiring, see page 39 (8 Project planning information)

Explanation of symbols, see page 53 (13 Legend)

3.1.1 PFU 760

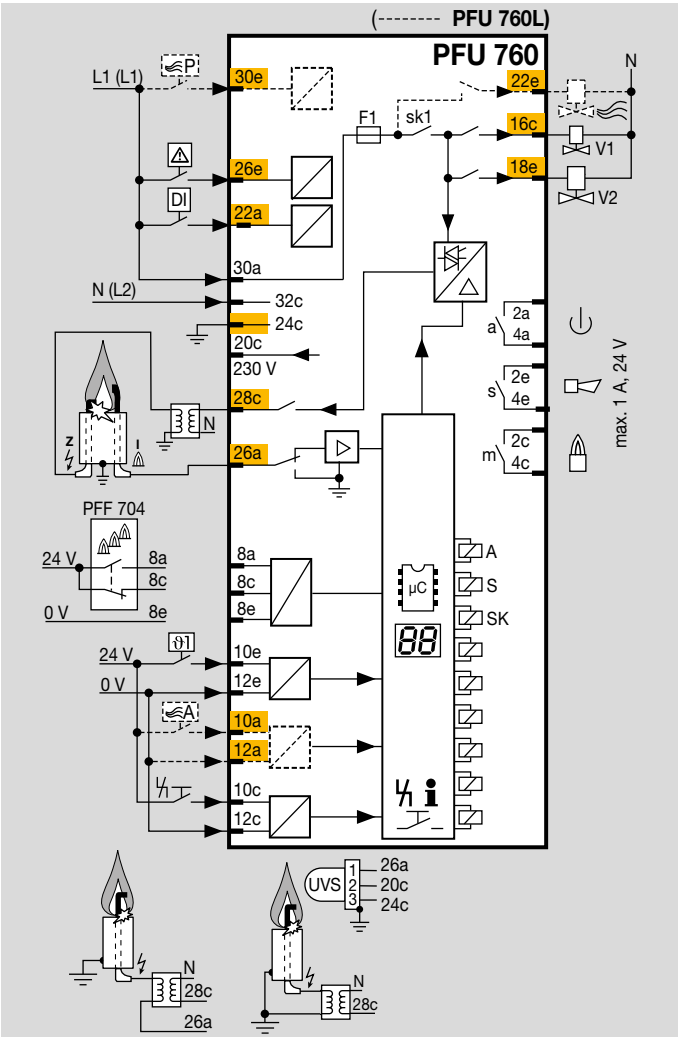

3.1.2 PFU 760..K1

As a replacement unit for burner control unit PFS/PFD 778.

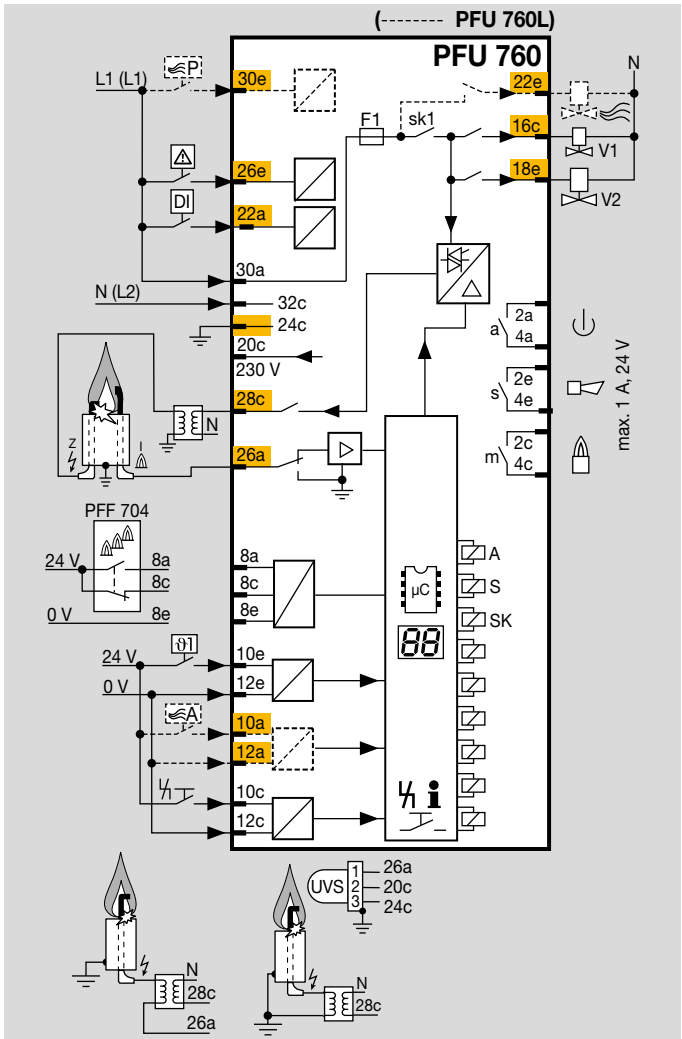

3.1.3 PFU 760..K2

As a replacement unit for burner control unit PFU 778.

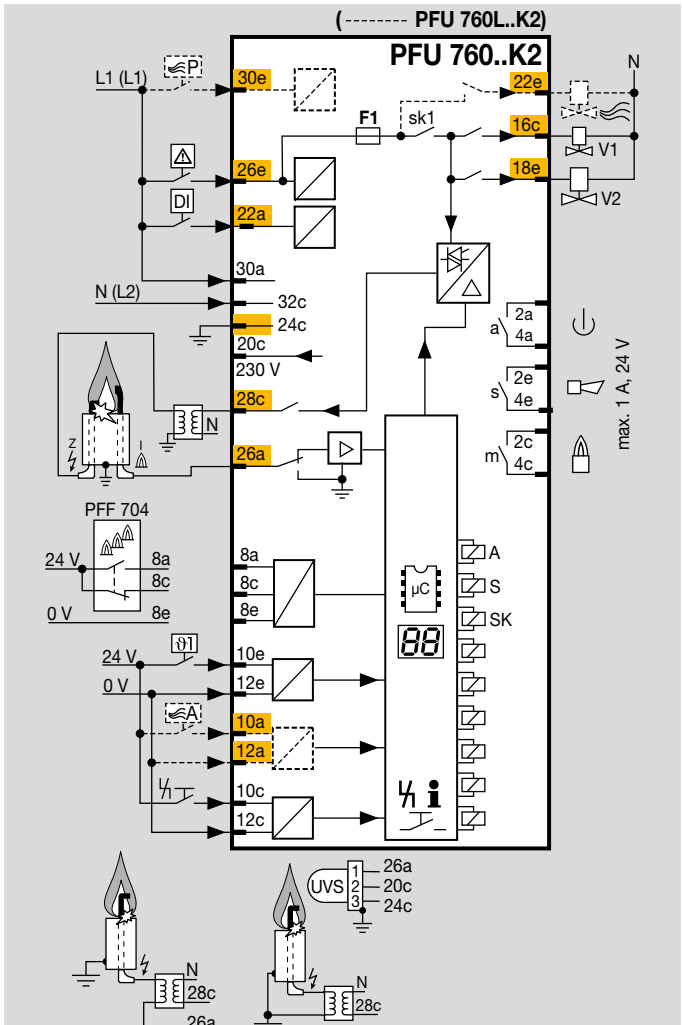

3.2 Program sequence

Parameters 30 and 31 = 0: High/Low control during operation, cooling in standby

Example of application, see page 7 (1.1.3 Two-stage-controlled burner)

	Switch on PFU 760
	▼
	In the event of fault signal: reset
	▼
00	Safety interlocks Start-up position/Standby
	▼
00	Flame simulation check (if parameter 15 = 1)
	▼
P0	External actuation of the air valve for purging
	▼
A0	External actuation of the air valve for cooling
	▼
01	Start-up with start-up signal (ϑ)
	▼
01	Wait until min. burner pause time t_{BP} has elapsed (parameter 21)
	▼
01	Flame simulation check (if parameter 15 = 0)
	▼
02	Safety time 1 t_{SA1} (P22) running, ignition in process, valves for 1st gas stage opens and min. operating time starts to elapse (P20)
	▼
02	If no flame detected: next start-up attempt (P10) or fault lock-out
	▼
03	Flame proving period 1 t_{FS1} running (P23)
	▼
03	In the event of flame failure: fault lock-out
	▼
04	Operation signalling contact closes, valve for 2nd gas stage opens, min. operating time t_B starts to elapse (P20)
	▼
04	In the event of flame failure: restart or fault lock-out
	▼
A4	External actuation of the air valve for capacity control
	▼
04	Controlled shut-down via start-up signal (ϑ)
	▼
00	If min. operating time t_B has elapsed: operation signalling contact opens, gas valves close and min. burner pause time t_{BP} starts to elapse (P21)

4 BCSoft

Version 3 of the BCSoft engineering tool provides extended access to the PFU via the optical interface. BCSoft Version 3 makes it possible to set device parameters on Windows-based PCs in order to adjust the PFU to the specific application. In addition, BCSoft provides extended access to the individual statistics and protocol functions.

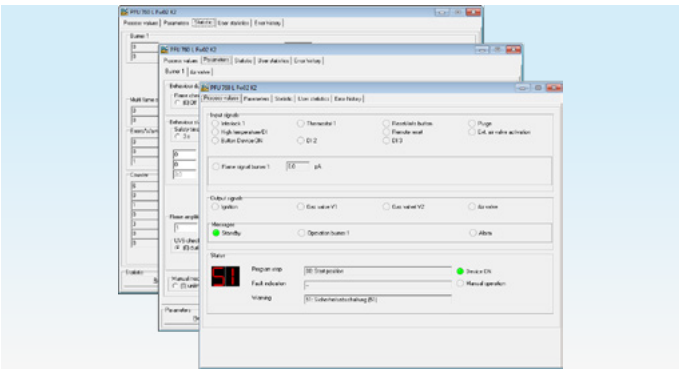

In addition to the engineering tool BCSoft Version 3, an opto-adapter is required to read the device parameters in and out, see page 45 (10.2.1 Opto-adapter PCO 200).

5 Program step/status

DISPLAY[1)]	Program step/status
00	Start-up position/Standby
A0	Cooling[2)]
01	Burner pause time t_{BP}
A1	Burner pause time t_{BP} with air
02	Safety time t_{SA}
A2	Safety time t_{SA} with air
03	Flame proving period t_{FS}
A3	Flame proving period t_{FS} with air
04	Burner operation
A4	Burner operation with air
P0	Purge
..	High temperature operation

[1)] In Manual mode, two dots flash on the display in program steps 1 to 4.

[2)] Air valve is open.

5.1 Fault messages

Fault message (flashing)	DISPLAY[1)]	Description
Burner flame simulation	01	Flame simulation/Flame signal before ignition
No flame after safety time	02	No flame formation to end of safety time
Flame failure during flame proving period 1 t_{FS}	03	
Flame failure during burner operation	04	Flame failure during operation
Flame simulation during pre-ventilation	A1	Burner flame simulation while air valve open
No flame after safety time	A2	No flame formation to end safety time while air valve open
Flame failure during flame proving period 1 t_{FS}	A3	Flame failure while air valve open
Flame failure during burner operation	A4	Flame failure during operation while air valve open
Too many remote resets	10	Remote reset activated > 5 × in 15 min.
Mains voltage	32	Operating voltage too low
Faulty parameterization	33	Parameter set contains illegal settings
Short circuit on a valve output	35	
Short circuit on ignition or valve output	36	
Safety interlock failure	S1	
Permanent remote reset	S2	Remote reset input activated > 25 s
Timing cycle too short	S3	Minimum timing cycle not observed.
Flame simulation during purge	P1	Burner flame simulation during pre-purge

1) In Manual mode, two dots flash on the display in program steps 1 to 4.

6 Parameter

Description	Parameter	Value range	Factory default settings	Adjustable[1)]
page 18 (6.2.1 Burner flame signal)	01	0–30		
page 18 (6.2.2 Program status when the most recent fault occurred)	03	x0–x8		
page 18 (6.2.3 Switch-off threshold of the flame amplifier)	04	1–20	1	•
page 25 (6.4.1 Burner start-up attempts)	10	1–4	1	•
page 28 (6.5.2 Restart)	12	0; 1	0	•
page 27 (6.5.1 Safety time during operation tSB)	14	1; 2	1	•
page 23 (6.3.1 Flame simulation check in start-up position/standby)	15	0; 1	1	•
page 26 (6.4.2 Minimum operating time tB)	20	3 ; 5 ; 10–25	t_{SA} (3; 5; 10)	•
page 24 (6.3.2 Minimum burner pause time tBP)	21	0–250	0	•
page 26 (6.4.3 Safety time on start-up tSA)	22	3; 5; 10	3; 5; 10[3)]	•
page 26 (6.4.4 Flame proving period tFS)	23	0–25	0	•
page 29 (6.6 Switchable gas valve V2 on PFU..L)	26	0; 1	0	•
page 30 (6.7.3 Air valve during operation)	30	0; 2; 3	0	•
page 33 (6.7.4 Air valve can be activated externally on start-up)	31	0; 1	0	•
page 33 (6.7.5 Air valve in the event of malfunction)	32	0; 1	1	•
page 19 (6.2.4 High temperature operation)[2)]	33	2; 3	2; 3[3)]	
page 35 (6.8.1 Manual mode limited to 5 minutes)	34	0; 1	1	•
page 22 (6.2.5 UVS check)	35	0; 1	0	•
page 34 (6.7.6 Low fire over-run)	36	0; 3; 5; 10; 15; 25; 60	0	•
page 30 (6.7.1 Purge)	42	0; 1	1	•
page 37 (6.10 Multi-flame control)	45	0; 1	0	•
page 36 (6.9 Password)	50	0000–9999	1234	•

1) Adjustable using BCSoft software and a PC opto-adapter.

2) Only for PFU..D.

3) Please quote in your order.

On parameterization, ensure that the program sequence started matches the application. Select the parameters so that the burner can restart as intended in all operating phases.

6.1 Scanning the parameters

During operation, the 7-segment display shows the program step/status.

The flame signal, the program status on last fault and all adjustable parameters of the PFU can be scanned one after the other by repeatedly pressing the Reset/Information button (for 2 s).

In the event of a fault, the PFU halts the program run, the display blinks and it then displays the cause of the fault in coded form.

6.2 Flame control

6.2.1 Burner flame signal

Parameter 01

Flame signal of the burner, display in µA, measuring range: 0–30 µA.

6.2.2 Program status when the most recent fault occurred

Parameter 03

This indicates the program status in which the last burner fault occurred (e.g. the unit indicates that a flame simulation has been detected with a blinking *01*).

In parameter 03, it is now shown which program position the unit was in when the fault was detected (waiting time *01* or standby *00*).

Result: a flame simulation was detected during the waiting time or standby.

6.2.3 Switch-off threshold of the flame amplifier

Parameter 04, burner switch-off threshold

The sensitivity at which the burner control unit still detects a flame can be set between 1 and 20 µA.

To maintain the safety time during operation (t_{SB}), the switch-off threshold for ionization control must be set to ≥ 2 µA and to ≥ 5 µA for UV control.

Example: in the case of UV control with the UV sensor UVS, the signal of the burner to be monitored is influenced by other burners.

The set value can be incremented in parameter 04 so that only the flame of the system's "own" burner is detected.

The measured flame signal of the system's "own" burner should be at least 3 µA (empirical value) higher than the set switch-off threshold.

6.2.4 High temperature operation

Parameter 33

Operation of firing systems at temperatures above 750°C.

The PFU..D features a fail-safe input with the function “High temperature operation”. If firing systems are operated above 750°C, the system is considered to be an item of high temperature equipment (see EN 746-2). Here, flame control must be in operation until the furnace wall temperature has exceeded 750°C.

Below 750°C, the flame is monitored by conventional means (UV sensor or flame rod). In High temperature mode (> 750°C), the flame may be controlled via the temperature using a safety temperature monitor (STM) in order to increase the system’s availability. This means that no incorrect flame signals, e.g. signals from a UV sensor which interprets reflected UV radiation as extraneous signals, may lead to faults.

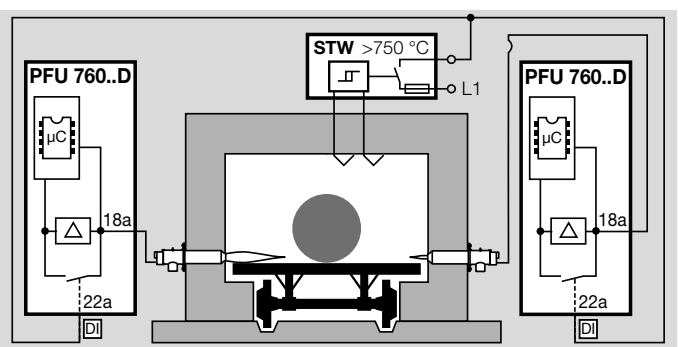

When the DI input is activated, the burner control unit reverts to High temperature mode. **This means: the PFU operates without evaluation of the flame signal. The safety function of the device’s internal flame control system is deactivated.**

In High temperature mode, the gas valves are opened and the burners are started as usual without monitoring the presence of a flame.

The precondition for this operating mode is that an external flame supervision device ensures the presence of the flame in a fail-safe manner indirectly via the temperature. For this purpose, we recommend a safety temperature monitor with double thermocouple (DIN EN 14597). The flame must be monitored again by conventional means (UV sensor or flame rod) in the event of sensor discontinuity or short circuit, failure of the safety temperature monitor or power failure.

The voltage may be applied to the DI input (terminal 22a) so as to activate High temperature mode only when the temperature at the furnace wall has exceeded 750°C.

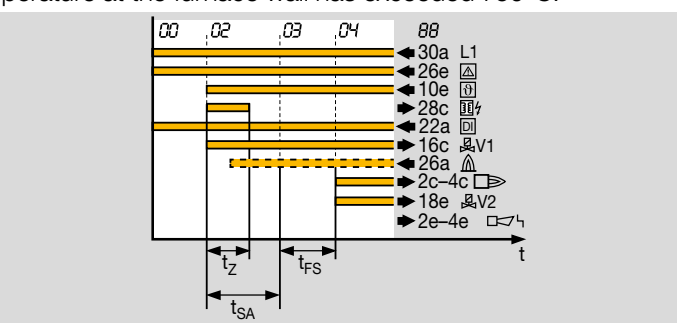

If the temperature in the furnace chamber drops below 750°C, the DI input must be disconnected from the electrical power supply and the furnace must then be operated with flame control.

The PFU..D then responds, depending on setting:

Parameter 33 = 1 (PFU 760..D..K2 only)

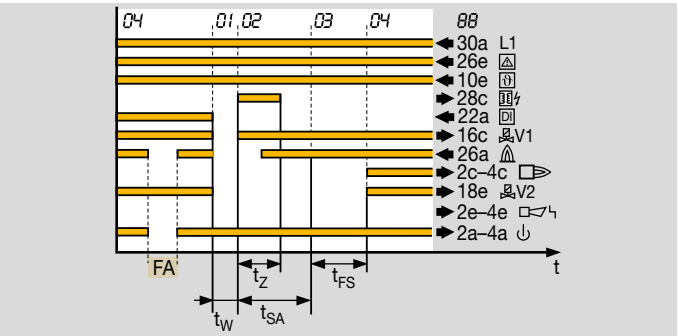

If the flame fails during high temperature operation, the ready contact opens for the duration of the flame failure (FA).

When High temperature mode is ended, the PFU switches off the burner and restarts with flame simulation check (recommended in the case of UV control with UVS).

Parameter 33 = 2

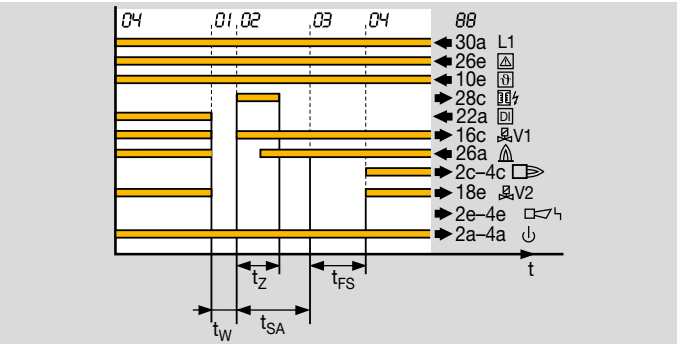

When High temperature mode is ended, the PFU switches off the burner and restarts with flame simulation check (recommended in the case of UV control with UVS).

Parameter 33 = 3

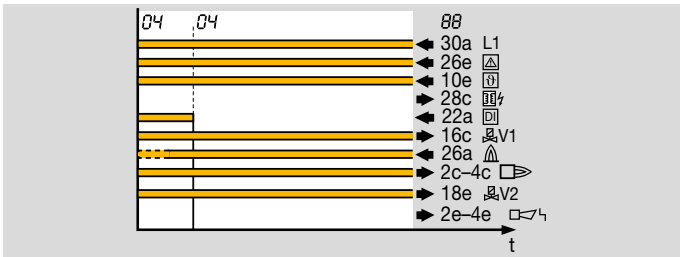

When High temperature mode is ended, the burner remains in operation and the PFU performs flame control again (recommended in the case of ionization control or UV control with UVC 1).

If no flame signal is present when High temperature mode is ended, the burner control unit performs a fault lock-out, regardless of parameter 33.

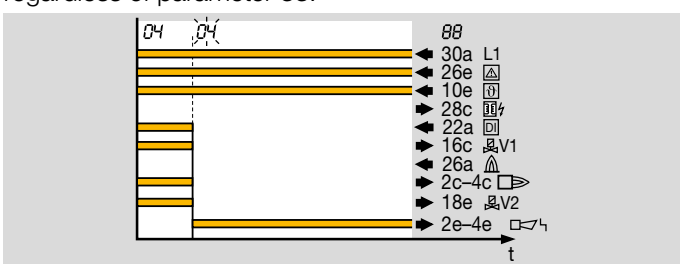

Parameter 33 = 4 (PFU 760..D..K2 only)

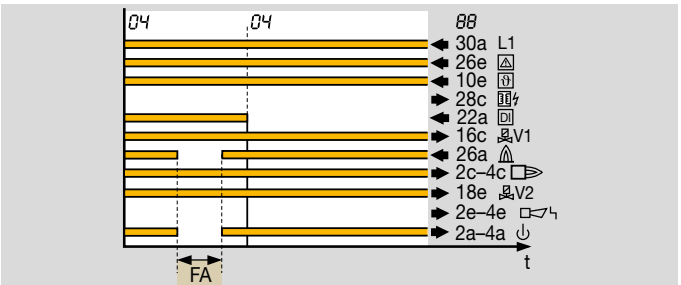

If the flame fails during high temperature operation, the ready contact opens for the duration of the flame failure (FA).

When High temperature mode is ended, the burner remains in operation and the PFU performs flame control again (recommended in the case of ionization control or UV control with UVC 1).

6.2.5 UVS check

Parameter 35

An automatic restart of the burner control unit can be activated every 24 hours via this parameter. The time starts each time the start-up signal (ϑ) is applied.

Parameter 35 = 0: unlimited burner operation.

Parameter 35 = 1: an automatic restart is activated once every 24 hours.

If flame control is provided by a UV sensor for intermittent operation (UVS), the operating state of the complete system is limited to 24 h pursuant to EN 298. To meet the requirement for intermittent operation, the burner is shut down and restarted automatically after a continuous operating time of 24 hours if it is not operated in compliance with the standard. As a result of the fact that there is no self-test (at least 1 x per hour), this functionality does not satisfy the requirements of EN 298 for continuous operation.

Since the PFU restarts automatically, it must be ensured that the started program sequence matches the application. Parameter 35 = 1 may be set only if the burner can restart as intended in all operating phases.

6.3 Behaviour in start-up position/standby

6.3.1 Flame simulation check in start-up position/ standby

Parameter 15

This defines the instant for the flame simulation check.

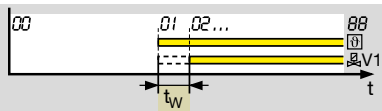

Parameter 15 = 0: the flame simulation check is conducted after applying the start-up signal (ϑ) during the waiting time t_W.



Parameter 15 = 1: the flame simulation check is conducted provided no start-up signal (ϑ) is applied (during the so-called start-up position/standby). This allows fast start-up of the burner since there is no waiting time t_W.

The burner must have been switched off for at least 4 s before start-up in order for the flame simulation check to be conducted correctly.

What is flame simulation?

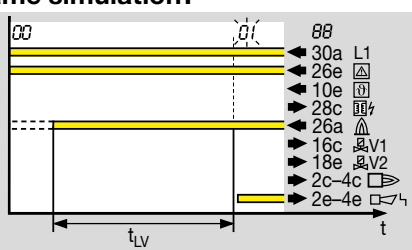

Flame simulation means that an extraneous signal is detected as a flame signal out of sequence. If the PFU 760 notices such an extraneous signal during the flame simulation check, it starts the flame simulation delay time t_{LV}. If the extraneous signal disappears during this time, the burner can start. Otherwise, a fault lock-out occurs. *01* flashes on the display.

The flame simulation check of the burner is active until valve V1 is enabled.

6.3.2 Minimum burner pause time t_{BP}

Parameter 21

Programmable time between 0 and 250 s.

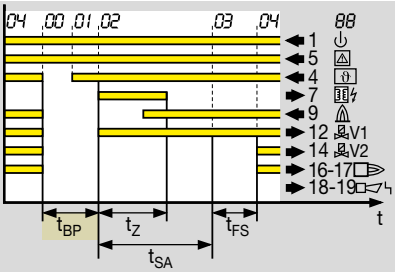

An immediate restart of the main burner after a controlled shut-down, a start-up attempt, restart, cooling or purging is prevented by the pause time. The pause time starts when the air valve is switched off. If a start-up signal (ϑ) is applied before expiry of this time, start-up is delayed until the end of the pause time.

After the pause time, the burner is started if the start-up signal (ϑ) is applied.

The minimum burner pause time t_{BP} serves to adapt the program sequence to the requirements of the application.

The time should be set such that the system can be moved to ignition position, i.e. butterfly valves can be closed and, possibly, gas can be flared off, before a restart occurs.

See application examples on page 6 (1.1.1 Staged On/ Off burner control), page 6 (1.1.2 Staged High/Low burner control) or page 7 (1.1.3 Two-stage-controlled burner).

6.4 Behaviour during start-up

6.4.1 Burner start-up attempts

Parameter 10

This parameter defines the maximum number of possible start-up attempts of the burner.

Up to three start-up attempts are possible in certain conditions. In accordance with DIN EN ISO 13577-2, a start-up attempt may be conducted only if the safety of the installation is not impaired. Note the requirements of the standards!

If no flame is detected during start-up, an immediate fault lock-out (P10 = 1) or up to two additional start-up attempts (P10 = 2, 3) are performed depending on parameter 10.

Parameter 10 = 1: 1 start-up attempt.

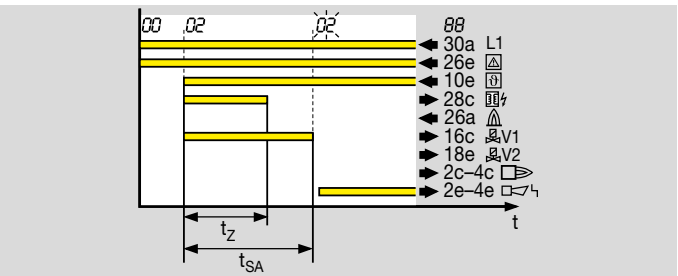

If no flame is formed during the start-up, so that at the end of the safety time t_{SA} no flame signal is detected, this will result in a PFU fault lock-out. The display blinks and shows the cause of the fault.

Parameter 10 = 2, 3:

2 or 3 start-up attempts.

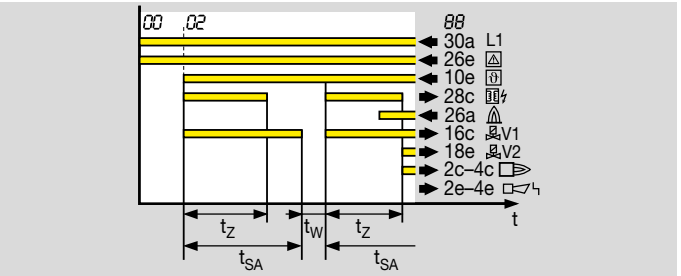

If no flame is formed during the start-up, so that at the end of the safety time t_{SA} no flame signal is detected, the PFU closes the gas valves and repeats the start-up. Each start-up attempt begins with the parameterized start-up behaviour.

If the safety time t_{SA} elapses without a flame signal having been detected, even after the last parameterized start-up attempt, this will result in a PFU fault lock-out. The display blinks and shows the cause of the fault.

6.4.2 Minimum operating time t_B

Parameter 20

Programmable time between reaching and leaving the operating state when the start-up signal (ϑ) is switched off. Adjustable from 0 to 25 s.

6.4.3 Safety time on start-up t_{SA}

Parameter 22

The flame is ignited during the safety time t_{SA}. It can be set to 3, 5 or 10 s.

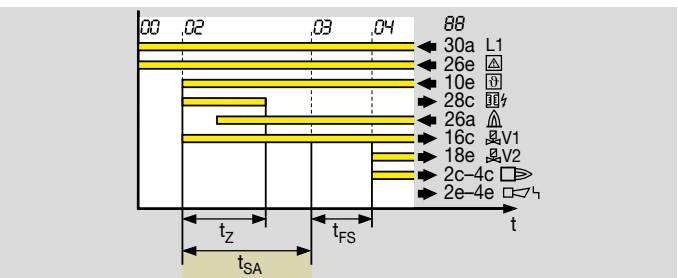

The start-up commences with the application of the start-up signal ϑ (terminal 10e). The safety time t_{SA} starts when the gas valves open. The valves open at the start of the safety time. The fuel supply to the burner is released so that a flame can form. If no flame is detected at the end of the safety time, the valves are closed again. Depending on parameter 10 (Burner start-up attempts), the PFU reacts either with an immediate fault lock-out (P10 = 1) or with one or two additional start-up attempts (P10 = 2 or 3). The PFU will complete a maximum of three start-up attempts.

The safety time must be determined on the basis of current national standards and regulations. The burner application and the burner capacity are the main criteria for this.

If the ϑ signal (terminal 10e) drops out during the safety time, the valves will not be switched off until the end of the safety time or after the elapse of the minimum operating time t_B.

6.4.4 Flame proving period t_{FS}

Parameter 23

The flame proving period (t_{FS}) can be parameterized to enable the burner flame to stabilize after the elapse of the safety time. Only when the flame proving period has elapsed will the next program steps be initiated by the PFU. The flame proving period can be set to between 0 and 25 s.

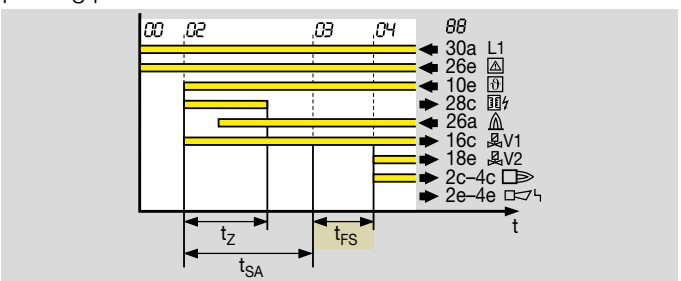

6.5 Behaviour during operation

6.5.1 Safety time during operation t_{SB}

Parameter 14

The safety time during operation is the time that the PFU needs to stop the fuel supply after a flame failure during operation. The safety time can be set to 1 or 2 s. Prolonging the safety time during operation increases the installation availability in the case of brief-duration signal fades (e.g. fades of the flame signal).

In accordance with EN 298, the maximum flame failure response time must not exceed 1 s. Under DIN EN ISO 13577-2, the safety time of the installation during operation (total closing time) must not exceed 3 s.

The requirements of national standards and regulations must be satisfied.

6.5.2 Restart

Parameter 12

This parameter determines whether an immediate fault lock-out or an automatic restart occurs after a flame failure during operation.

In accordance with DIN EN ISO 13577-2, a restart may be conducted only if the safety of the installation is not impaired. A restart is recommended for burners which occasionally display unstable behaviour during operation.

The precondition for an automatic restart is that the burner can restart (as intended in all operating phases). In this case, it must be ensured that the program sequence started by the PFU matches the application.

Parameter 12 = 0: Off

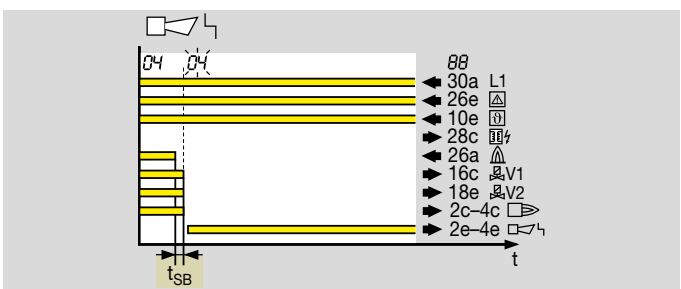

A fault lock-out occurs in the event of flame failure during operation.

See also parameter 32, page 33 (6.7.5 Air valve in the event of malfunction)

Parameter 12 = 1: On. The restart function is active.

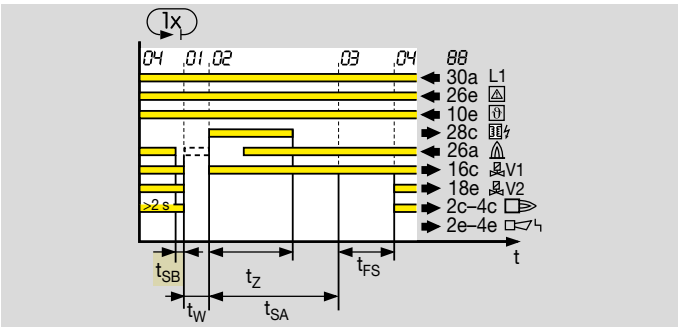

If a flame failure occurs during operation (minimum operating time of 2 s), the valves are closed and the operation signalling contact is opened within the safety time during operation t_{SB}. The burner control unit then attempts to restart the burner once. If the burner does not function, a safety shut-down with fault lock-out occurs. The display blinks and shows the fault message *84* or *04*.

6.6 Switchable gas valve V2 on PFU..L

Parameter 26

Parameter 26 = 0: gas valve V2 opens with the operating signal.

Parameter 26 = 1: gas valve V2 opens with the air valve during operation.

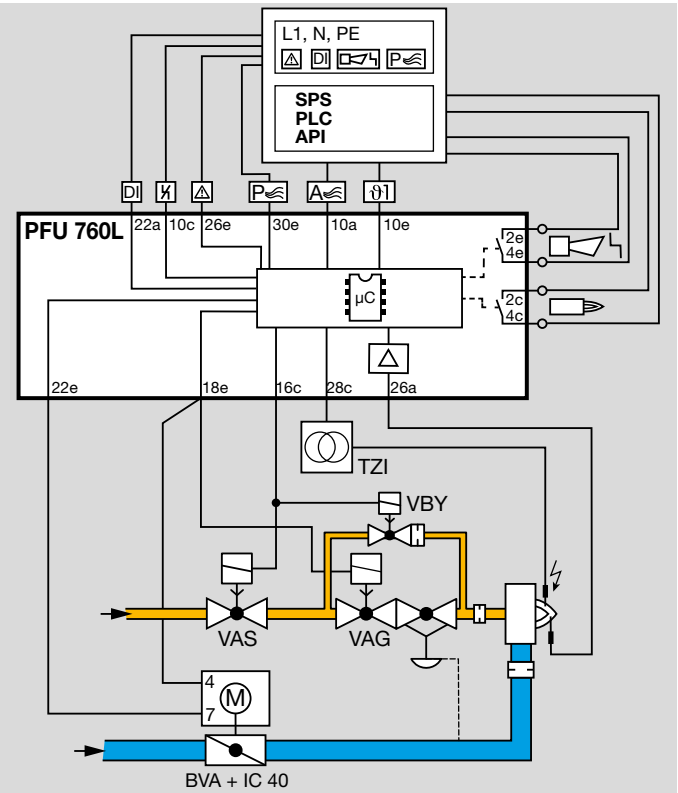

A switchable gas valve V2 can be activated with the PFU..L. If parameter 26 is set to 1, gas valve V2 can be activated synchronously with the air valve during operation via the input for the external activation of the air valve (terminals 10a/12a).

6.7 Air valve control PFU..L

The PFU..L features an adjustable air valve control. The air valve control supports the following functions:

- Purge
- Cooling in start-up position/standby
- Switching of the burner between low and high burner capacity during operation via the air valve
- Air valve opens with valve V1 or valve V2
- Low fire over-run time t_{KN} after a controlled shut-down

Parameters 30 and 31 define the control of the air valve during the burner start.

6.7.1 Purge

Parameter 42

The PFU..L supports centrally-controlled pre-purge or post-purge. In the case of multiple burner applications, burners with mechanical combustion air supply are used. The air for combustion and pre-ventilation is supplied by a central fan controlled by a separate automation system.

The air valve can be activated externally via input 30e for purging. During activation of the air valve, the display indicates *P0*.

Parameter 42 = 0: purge with Low signal. The air valve is closed when voltage is applied to terminal 30e.

Parameter 42 = 1: purge with High signal. The air valve is opened when voltage is applied to terminal 30e. The PFU..L is informed that purging is currently being performed by input 30e. It then opens the air valve, regardless of the status of the other inputs (purging has priority). The display indicates *P0*.

6.7.2 Cooling in start-up position/standby

The air valve can be activated externally via input 10a for cooling in the start-up position. During activation of the air valve, the display indicates *A0*.

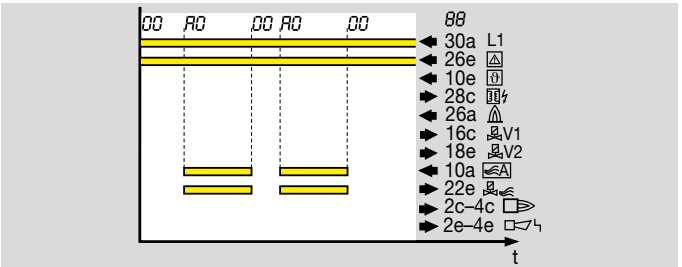

6.7.3 Air valve during operation

Parameter 30

Parameter 30 = 0: opens on external activation.

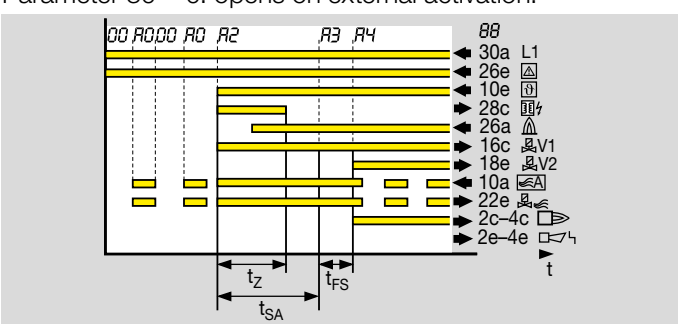

External control allows switchover between low fire and high fire during burner start and operation.

On burners on which the gas/air ratio is controlled by a pneumatic air/gas ratio control system and which need to be started at low fire, e.g. on two-stage-controlled burners, see page 6 (1.1.2 Staged High/Low burner control), ac-

tivation of the air valve during burner start via the input at terminal 10a must be prevented. Setting P30 = 0 together with parameter 31 = 0, see page 33 (6.7.4 Air valve can be activated externally on start-up), is required for this application.

Parameter 30 = 1: opens with valve V1.

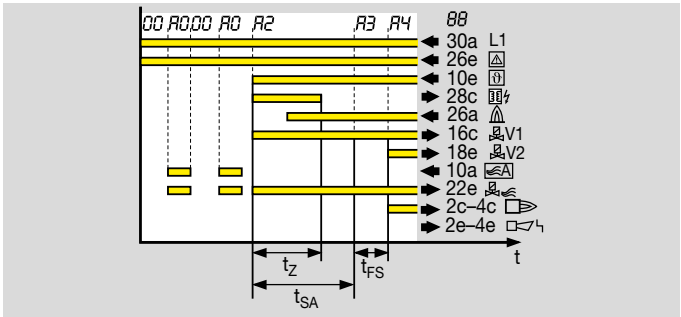

The air actuator cannot be activated externally via the input at terminal 10a during burner start and operation.

Application: single-stage-controlled burner is switched ON/OFF via the ϑ input.

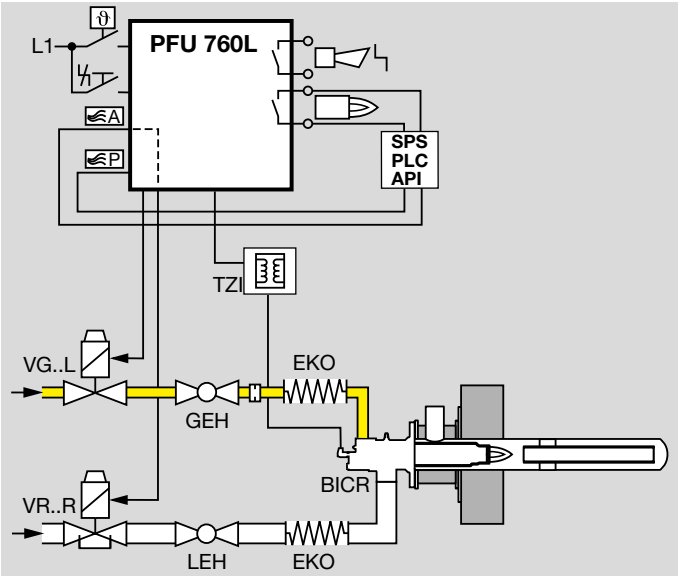

Parameter 30 = 2: opens with valve V2.

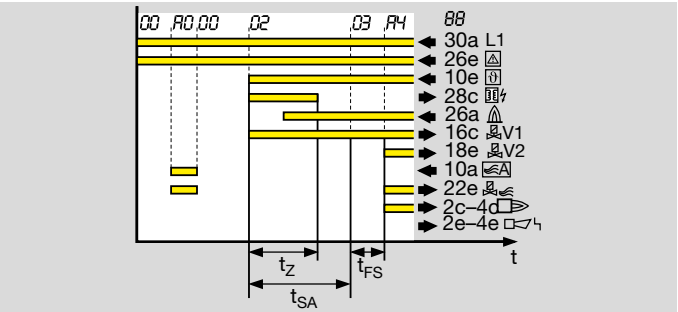

The air actuator cannot be activated externally via the input at terminal 10a during burner start and operation.

Application: two-stage-controlled burner is switched ON/OFF via the ϑ input.

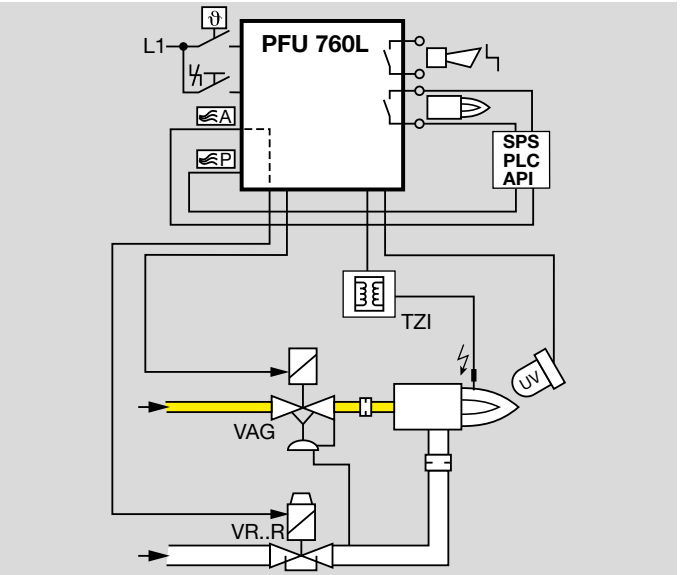

6.7.4 Air valve can be activated externally on start-up

Parameter 31

To start up the burner as intended, external activation of the air valve can be blocked during start-up (prevents synchronization problems between the PFU and the central control system).

Parameter 31 = 0: cannot be activated. During start-up, the air valve remains closed. The air valve cannot be activated externally.

Parameter 31 = 1: can be activated externally.

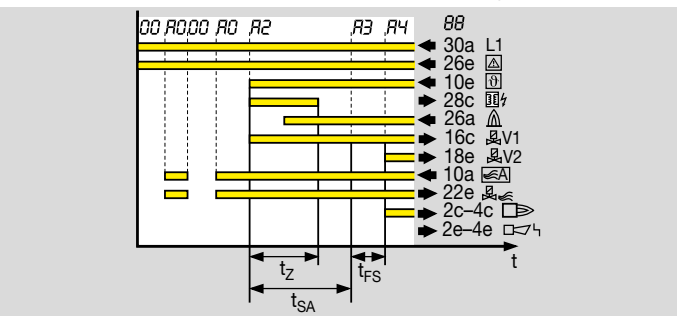

The air valve can be activated externally via the input at terminal 10a during start-up. Parameter 30 must be set to 0 for this purpose, see page 30 (6.7.3 Air valve during operation).

These settings (P30 = 0, P31 = 1) may be selected only if the burner can start with full air capacity.

6.7.5 Air valve in the event of malfunction

Parameter 32

This parameter decides whether the air valve can be activated externally via the input at terminal 10a in the event of a fault lock-out.

Parameter 32 = 0: cannot be activated. The air valve remains closed in the event of a fault lock-out. It cannot be activated externally via terminal 10a.

Parameter 32 = 1: can be activated externally. The air valve can be activated externally via the input at terminal 10a during a fault, e.g. for cooling.

6.7.6 Low fire over-run

Parameter 36

The low fire over-run (t_{KN}) is applicable to systems with a pneumatic air/gas ratio control system and On/Off control. Using the low fire over-run function reduces the O_2 content in the furnace atmosphere.

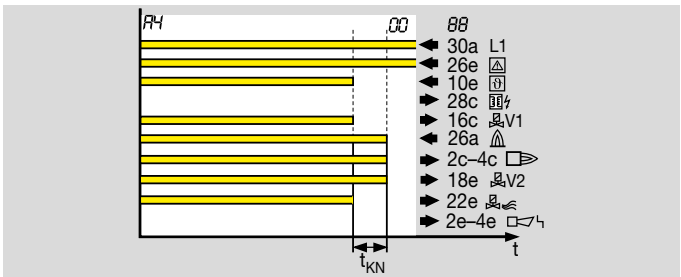

Parameter 36 = 0: Off. No low fire over-run is performed. The gas circuit is closed immediately owing to the quick-closing gas valve in the case of On/Off control. The air circuit is closed more slowly. The air flowing in during the closing time increases the O_2 content in the combustion chamber.

Parameter 36 = 3; 5; 10; 15; 25 or 60: time in seconds. During this time, the gas valve remains open. The air valve is closed with deactivated start-up signal (ϑ).

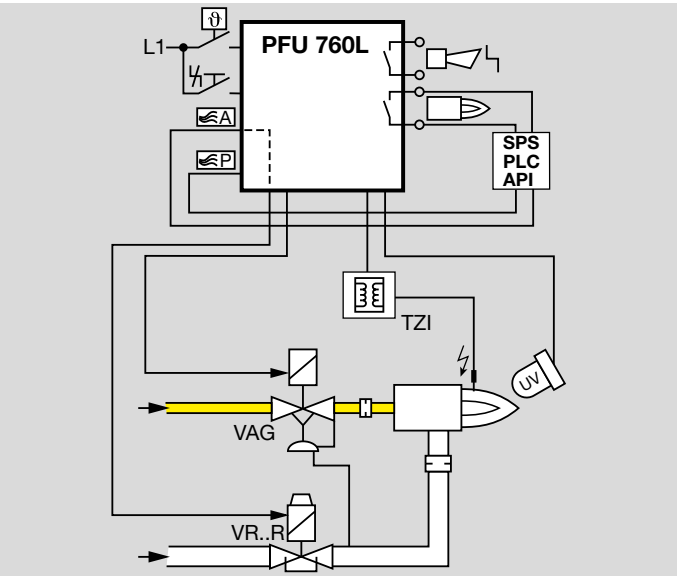

This means that the burner is initially adjusted down to low fire and then switched off completely. Flame control is still operational. It must be ensured that no excess gas occurs.

6.8 Manual mode

For convenient setting of the burner or analyzing faults.

The parameter display is not available in Manual mode. Manual mode can be accessed only if the unit was not in Fault state before switching off. The following times/functions are not active in Manual mode: start-up attempts, restart, minimum operating time and cycle lock.

If the Reset/Information button is pressed for 2 s during switch-on, the PFU reverts to Manual mode. Two dots flash on the display.

In this operating mode, the burner control unit operates independently of the status of the inputs (apart from the prepurge input and the safety interlocks. These are of higher priority and will be processed first).

Each time after the button is pressed again, the PFU moves to the next section of the program sequence and stops there. After approx. 3 s, the flame signal will be displayed instead of the program parameter. Briefly pressing the Reset/Information button (< 1 s) displays the relevant Manual mode step. If there is flame simulation during start-up, the flame signal is displayed immediately.

On units with air valve control, the air valve can be opened and closed repeatedly by pressing the button during operation.

Manual mode can be terminated by switching off the PFU (On/Off button).

6.8.1 Manual mode limited to 5 minutes

Parameter 34

Parameter 34 determines when Manual mode is terminated.

Parameter 34 = 0:

Manual mode is not limited in time. If this function has been selected, operation of the furnace may be continued manually in the event of failure of the central control system.

Parameter 34 = 1:

Manual mode ends automatically five minutes after the last time the button was pressed. The PFU then moves abruptly back to start-up position/standby.

6.9 Password

Parameter 50:
(Four-digit) password saved to protect parameter settings.
To prevent unauthorized changes to parameter settings, a password is stored in parameter 50. Changes to parameter settings can only be made once this number has been entered. The password can be changed using BCSoft.

Note the effect of parameter settings on the safe functioning of your system.

The password set at the factory can be found in the delivery note supplied.

6.10 Multi-flame control

Parameter 45

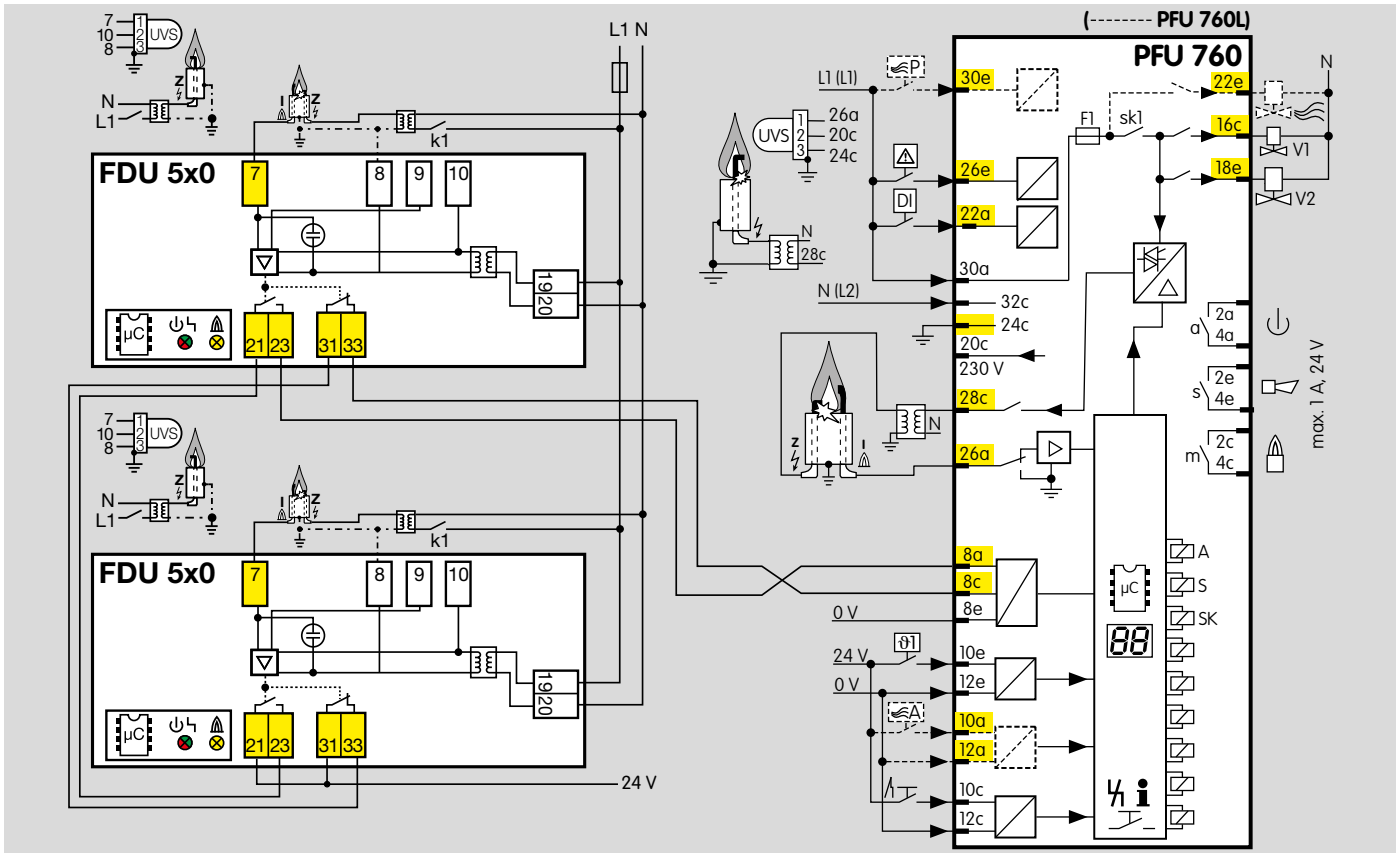

Parameter 45 = 0: multi-flame control is switched off.

Parameter 45 = 1: multi-flame control is switched on. The parameter must be set to 1 to ensure that the flames are monitored.

7 Selection

7.1 ProFi

A web app selecting the correct product is available at www.adlatus.org.

7.2 Selection table

Option	PFU
Series 700	7
Standard version	60
Air valve control	L
Mains voltage	T, N
Digital input for high temperature operation	D*
Configured and prepared for UVC 1	U*
Replacement for PFU 778/798, PFS/PFD	K1, K2*

* *If "none", this specification is omitted.*

Order example

PFU 760LT

7.3 Type code

PFU	Burner control unit
7	Series 700
60	Standard version
80	Version for pilot and main burners
L	Air valve control
T	Mains voltage 220/240 V AC, 50/60 Hz, for grounded and ungrounded mains
N	Mains voltage 110/120 V AC, 50/60 Hz, for grounded and ungrounded mains
D	Digital input for high temperature operation
U	Configured and prepared for UVC 1
K1	Replacement for PFS/PFD
K2	Replacement for PFU 778/798

8 Project planning information

8.1 Cable selection

Use mains cable suitable for the type of operation and complying with local regulations. Do not route PFU 760 cables in the same cable duct as frequency converter cables or cables emitting strong fields.

8.1.1 Ignition cable

Use unscreened high-voltage cable, see page 45 (10.1 High-voltage cable). Cable length: max. 5 m, recommended < 1 m. Screw the ignition cable securely into the ignition transformer and run to the burner by the shortest possible route.

The longer the ignition cable, the lower the ignition capacity. Only use radio interference suppressed terminal boots (with 1 kΩ resistor) for spark electrodes, see page 46 (10.5 Radio interference suppressed terminal boots). Do not lay UV/ionization cable and ignition cable together and lay them as far apart as possible.

8.1.2 Ionization cable

Use unscreened high-voltage cable, see page 45 (10.1 High-voltage cable). Cable length: max. 100 m. External electrical interference must be avoided. Install as far as possible from mains and ignition cables and interference from electromagnetic sources. If possible, do not lay in a metal conduit. Several ionization cables can be routed together.

8.1.3 UV cable

Cable length: max. 100 m. External electrical interference must be avoided. Install as far as possible from mains and ignition cables and interference from electromagnetic sources. If possible, do not lay in a metal conduit. Several UV cables can be routed together.

8.2 Spark electrode

8.2.1 Electrode gap

Gap between electrode and burner ground:
2 mm ± 0,5 mm.

8.2.2 Star electrodes

We recommend using 7.5 kV ignition transformers on burners with star electrodes.

8.3 Minimum operating time

Even if the start-up signal (ϑ) is applied only briefly, the time set under parameter 20 elapses before the burner control unit shuts down the burner or signals a fault.

The minimum operating time t_B can be extended beyond the safety time t_{SA} to max. 25 s.

8.4 Safety interlocks (limits)

The limiters in the safety interlock (linking of all the relevant safety-related control and switching equipment for the use of the application, e.g. safety temperature limiter, minimum and maximum gas pressure, tightness control) must isolate terminal 26e from the voltage supply. If the safety interlock is interrupted, this is indicated by a blinking *51* on the display.

If the safety interlocks fail, an immediate program abort with switch-off of all outputs occurs (even during the safety time). If the safety interlocks are operational again or the unit is switched back on, the program run is restarted in standby.

8.5 Emergency stop

8.5.1 In the event of fire or electric shock

If there is a risk of fire, electric shock or similar, inputs L1, N and 26e (safety interlocks) of the PFU should be disconnected from the electrical power supply – this should be reflected in the wiring on site.

8.5.2 Via the safety interlocks (limits)

The safety interlocks turn off the power to input 26e, such as in the event of low air pressure or similar.

8.6 Reset

8.6.1 Parallel reset

Several burner control units can be reset in parallel using the external button. The PFU cannot be reset by mains failure.

8.6.2 Permanent remote reset

Permanent remote reset gives rise to a malfunction. If a remote reset signal is permanently applied to terminals 10c/12c, *52* flashes on the display to indicate a fault.

Reset with a pulse < 1 s.

8.6.3 Automatic remote reset (PLC)

In the case of automatic remote reset (PLC), the reset pulse duration should not exceed 1 second. Check compliance with Standards.

If a fault is acknowledged by remote reset too often, error *10* (Too many remote resets) is displayed. The error can only be acknowledged with the Reset/Information button on the unit.

The burner malfunction must be remedied. The malfunction cannot be remedied by changing the method of activation.

8.6.4 Burner start

A furnace start may only be initiated, if it has been ensured using an appropriate procedure that there is no combustible mixture in the combustion/processing chamber, in the connected areas or in the flue gas system (heat exchanger, dust collector). This can be achieved by pre-purge, which occurs immediately before ignition or within the period specified in the operating instructions.

In the case of multiple burner applications, pre-purge is not necessary after a controlled burner shut-down.

Note the requirements of the Standards. For exceptions, see Standards.

8.6.5 Restart and start-up attempts

The precondition for a restart/start-up attempt is that activation of the restart allows the burner to restart as intended (in all operating phases). It must be ensured that the program sequence started by the PFU matches the application in this case.

Note the requirements of the Standards. For exceptions, see Standards.

8.7 Fault signal

The fault signalling contact opens, as soon as the mains voltage fails.

8.8 Overload protection

To protect the PFU against overload by excessive cycling, it can only carry out a specific number of start-up attempts per minute. The maximum number of start-ups per minute depends on the safety time t_{SA}:

t [s]	Ignition transformer TZI	Max. start-ups/min.
3	5-15/100	6
5	5-15/100	5
10	5-15/100	4

If too many start-ups are attempted per minute, 53 flashes on the display as a warning signal.

8.9 Installation

Installation position as required. Installation in 19" module subracks only, see page 46 (10.7 Module subrack).

Install in clean environment ensuring enclosure IP 54 or higher, whereby no condensation is permitted. Cable length between PFU and burner: max. 100 m.

8.10 Electrical connection

The PFU is suitable for hard wiring only. Do not reverse phase and neutral conductor. Different phases of a three-phase current system must not be installed at the PFU. No voltage may be connected to the valve and ignition outputs.

8.10.1 UVS sensor wiring

Connect the UVS sensor directly to the PFU. Operating the sensor with incorrect polarity or voltage can lead to destruction of the sensor.

8.11 PFU switched off

The PFU cannot be activated when no mains voltage is applied or when it is switched off. The fault signalling contact is only closed when the unit is supplied with voltage and switched on.

If the unit is switched off, an immediate program abort with switch-off of all outputs occurs (even during the safety time). When the unit is switched on, the program run is restarted in standby.

8.12 Furnace control

Switch on the system to start up the furnace, then release the burner start via the safety interlocks and afterwards start the burner control so that the burner control unit may monitor the burners as intended. To shut down the furnace, first disconnect the burner control unit from the temperature control (burner ON signal), then disconnect the safety interlocks and finally switch off the system.

8.13 Note on EC-type examination

Since EN 298 (1993) does not describe all functions of the PFU, the operator is responsible for ensuring that all parameters and functions are matched to the respective application.

8.14 Mains switch

The mains switch in the unit isolates the PFU on two poles from the mains. It does not meet the requirements of EN 50156-1 (5.2.2 Disconnecting switch) set out in chapter 5 for a device to disconnect the power supply. Although the mains switch cannot be used for disconnecting from the electrical power supply in accordance with EN 50156, it does allow the burner to be isolated functionally from the central control system. This function is required for manual operation and, in the case of PROFIBUS units, to switch off the unit without causing bus faults. Disconnection for electrical maintenance work is to be implemented with an external isolating switch per unit or group only, in accordance with Standard EN 50156.

8.15 Changing parameters

In certain cases, it may be necessary to change the default settings. Using a separate software package and a PC opto-adapter, it is possible to modify certain parameters on the PFU, such as the switch-off threshold of the flame amplifier, the behaviour in the event of a flame failure or whether the pilot burner is to burn permanently in the case of pilot and main burner monitoring.

The software package with PC opto-adapter, as well as "Changed parameters" stickers, are available as accessories, see page 45 (10 Accessories).

The device parameters set at the factory are specified in the delivery note.

Document changed parameters in BCSoft using the protocol function and enclose the protocol with the plant documentation.

If a replacement is ordered for a PFU with changed parameters, refer to the protocol for details.

8.16 Calculating the safety time t_{SA}

See www.adlatus.org

9 Flame control

9.1 With flame rod

The PFU generates an alternating voltage (230 V AC) between the sensing electrode and burner ground. The flame rectifies this voltage. Only the DC signal (depending on the switch-off threshold, see page 18 (6.2.3 Switch-off threshold of the flame amplifier)) is recognized by the burner control unit as a flame signal.

A flame cannot be simulated. Ignition and monitoring with a single electrode is possible.

9.2 With UV sensor

A UV tube inside the UV sensor detects the ultraviolet light of a flame. It does not respond to sunlight, incandescent bulb light or infrared radiation emitted by hot workpieces or red-hot furnace walls.

In the event of incident UV radiation, the UV sensor rectifies the supplied alternating voltage. As with ionization control, the burner control unit only detects this DC signal.

When using UV sensors of Type UVS, the burner control unit may be used for intermittent operation only. This means that operation must be interrupted at least once every 24 hours. This can be programmed using parameter 35.

For more information: see brochure UVS. The burner control unit PFU..U is prepared for UV sensor UVD 1. This enables continuous operation. For more information: see Technical Information UVD.

9.3 Via the temperature in high temperature equipment

High temperature equipment is defined as a thermoprocessing installation, in which the wall temperature of the combustion chamber and/or the processing chamber exceeds 750°C. Burner control unit PFU..D features a special "High temperature operation" function. During heating up, standard monitoring methods (ionization or UV) must be used for flame control. When the working temperature has exceeded 750°C, indirect flame control can be taken over by a central monitoring device. When the DI input (terminal 22a) is activated, the burner control unit reverts to this operating mode.

Attention: in "High temperature operation", i.e. with the DI input being activated, burner control unit PFU..D does not evaluate the flame signal. The safety function of the burner control unit's flame control is deactivated during this operating phase.

10 Accessories

10.1 High-voltage cable

FZLSi 1/7 -50°C (-58°F) to +180°C (+356°F),
Order No. 04250410,

FZLK 1/7 -5°C (23°F) to +80°C (+176°F),
Order No. 04250409.

10.2 BCSoft

The current software (Version 3.xx) can be downloaded from our Internet site at www.docuthek.com. To do so, you need to register in the DOCUTHEK.

10.2.1 Opto-adapter PCO 200



Including BCSoft CD-ROM,
Order No.: 74960625.

10.3 Stickers for labelling



For printing with laser printers, plotters or engraving machines, 27 × 18 mm or 28 × 17.5 mm.

Colour: silver

10.4 “Changed parameters” stickers

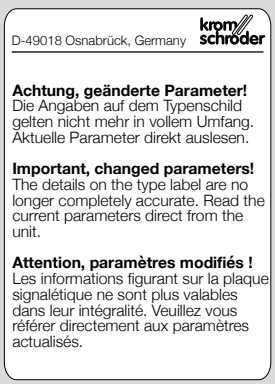

Affix on the connection diagram of the PFU 760 following changes to device parameters set at the factory.

100 pcs, Order No.: 74921492.

10.5 Radio interference suppressed terminal boots

Right-angle terminal boot, 4 mm, interference-suppressed, Order No. 04115308.

Straight terminal boot, 6 mm, interference-suppressed, Order No. 04115306.

10.6 Socket connectors

Type	Order No.
Socket connector E, 48-pin solder tag connection	04120148
Socket connector E, 48-pin wire-wrap connection	04120158

10.7 Module subrack

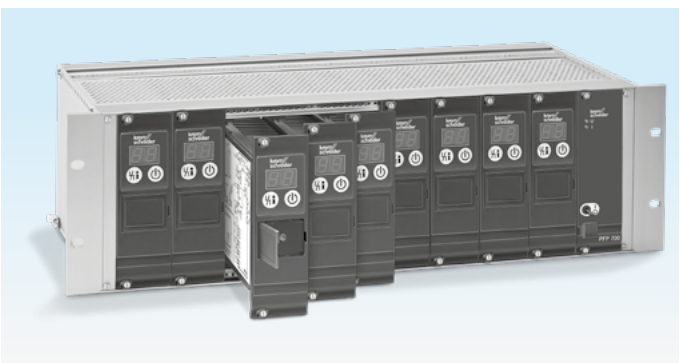

Module subrack BGT S-9U/1 for PFP 700, PFU 760

consisting of:
module subrack, printed-circuit board with rear terminal strip, function-tested, standard documentation, guide rails, without partial front plates, screw terminals at the rear.

Slots 1–9 for PFU 760/780, slot 10 for PFP 700, Order No. 84402281

Module subrack BGT SA for PFA 700/PFU 760 and PFA 710/PFU 780

Consisting of:
module subrack, printed-circuit board with rear terminal strip, function-tested, standard documentation, guide rails, without partial front plates, screw terminals at the rear, relays and screw terminals for four free inputs and four free outputs, connection to PROFIBUS DP with D-Sub socket.

BGT SA-9: slot 1 for PFA 700, slots 2–10 for PFU 760,
BGT SA-8: slot 1 for PFA 710, slots 2–9 for PFU 780

Order No.
BGT SA-9U/1 DP700: 84402291
BGT SA-8U/1 DP710: 84402292 (no illustration provided)

10.8 Power supply PFP 700

For supplying the control inputs of burner control unit PFU or for supplying the auxiliary voltage to relay module PFR 704. Operating status display on the front panel. PFP switches off in the event of an output overload.

Output voltage 24 V, output rating 14 VA.



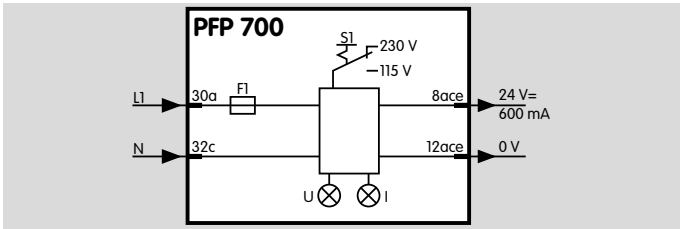

10.9 Fieldbus interface PFA 700

For connection of up to nine burner control units PFU 760 to industrial communication networks using PROFIBUS DP, in order to transfer measuring, control and regulation signals as a bundle. 4 digital inputs: 24 V DC, ± 10%, < 10 mA, 4 digital outputs: relay contact, max. 1 A, 264 V (not fused internally). Mains voltage: 110–240 V AC, -15/+10%, 50/60 Hz. For further information, see Technical Information PFA.



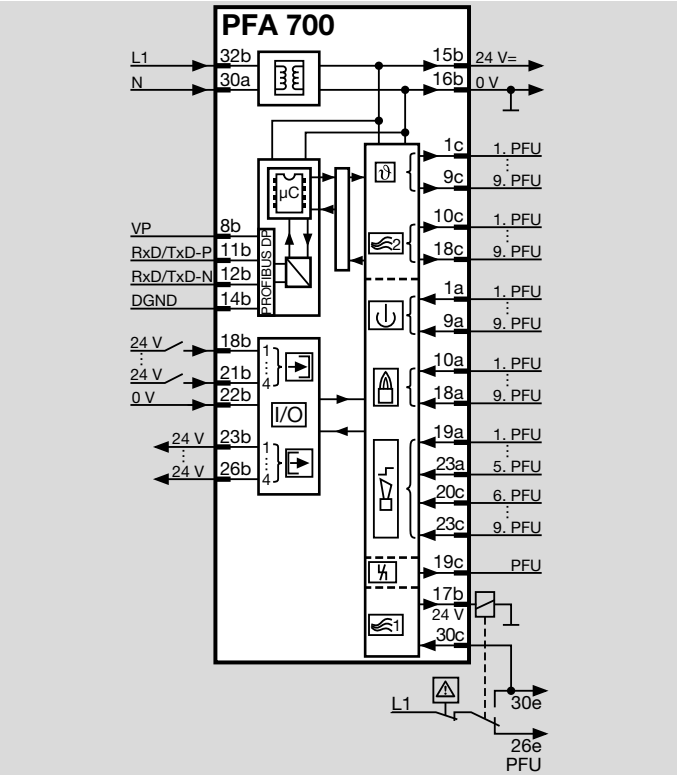

11 Technical data

Ambient conditions

Condensation and dew in and on the unit are not permitted. Avoid direct sunlight or radiation from red-hot surfaces on the unit.

Avoid corrosive influences, e.g. salty ambient air or SO_2.

Ambient temperature: -20 to +60°C (-4 to +140°F).
No condensation permitted.
Enclosure: IP 00, after installing in a module subrack BGT..1DP700 or BGT..1DP710 according to the instructions, the front corresponds to IP 20 pursuant to IEC 529.
Permitted operating altitude: < 2000 m AMSL.

Mechanical data

Number of operating cycles:
max. 1,000,000 for 1 A resistive load.
Mains switch: 1000,
Reset/Information button: 1000.

Weight: approx. 0.65 kg (1.43 lb).

Electrical data

Mains voltage:
PFU..T: 220/240 V AC, -15/+10%, 50/60 Hz,
PFU..N: 110/120 V AC, -15/+10%, 50/60 Hz,
for grounded or ungrounded mains. Voltage for valves = mains voltage.

Input voltage of signal inputs:

Rated value	110/120 V AC	220/240 V AC
Signal “1”	80–132 V	160–264 V
Signal “0”	0–20 V	0–40 V
Frequency	50/60 Hz	50/60 Hz

Rated value	24 V DC
Signal “1”	24 V, ±10%
Signal “0”	< 1 V

24 V input current: signal “1” = typ. 5 mA.

Power consumption:
8 VA plus inherent consumption of the ignition transformer.

Output current: max. 2 A per output, but total current for valves and ignition transformer:
max. 2.5 A. Operation and fault signalling contacts:
dry contact (floating), max. 1 A, 24 V, not fused internally.

Flame control:
sensor voltage: approx. 230 V AC,
sensor current:: > 1 µA.
Length of sensor cable:
max. 100 m (328 ft).

Fuse in unit:
F1: 3.15 A, slow-acting, H,
pursuant to IEC 127-2/5,
F3: 3.15 A, slow-acting, H,
pursuant to IEC 127-2/5.

Fail-safe inputs and outputs:

All the inputs and outputs marked “ ” (see page 10 (3.1 Connection diagram)) may be used for safety tasks.

11.1 Dimensions

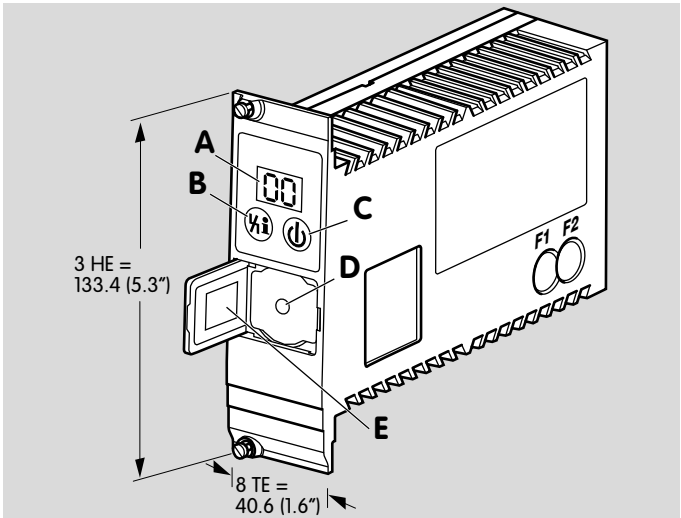

11.2 Operating controls

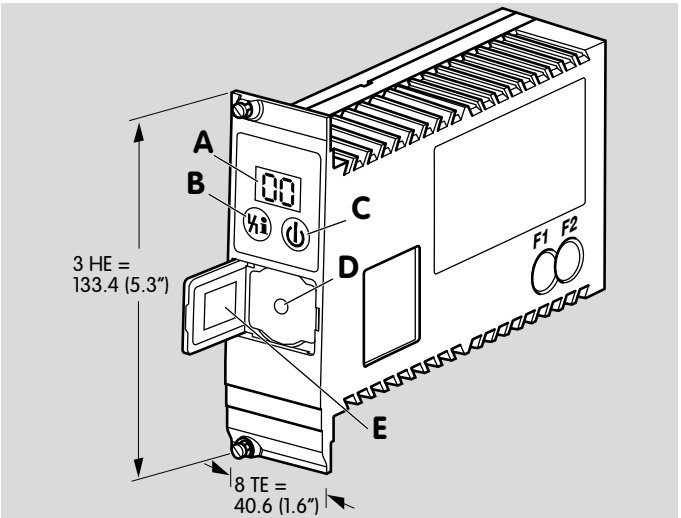

A: 2-digit 7-segment display

B: Reset/Information button to reset the system after a fault or to scan parameters on the display.

C: Mains switch

D: Optical interface

E: Type label

11.3 Safety-specific characteristic values for SIL

Certificates – see www.docuthek.com.

Max. service life under operating conditions:
10 years after date of production, plus max. 6 months in storage prior to first use.

For a glossary of terms, see page 54 (14 Glossary).

Suitable for Safety Integrity Level	SIL 3
Diagnostic coverage DC	97.9%
Type of subsystem	Type B to EN 61508-2, 7.4.3.1.4
Mode of operation	High demand mode pursuant to EN 61508-4, 3.5.12
Mean probability of dangerous failure PFH_D	1.34×10^{-8} 1/h
Mean time to dangerous failure $MTTF_d$	$MTTF_d = 1/PFH_D$
Safe failure fraction SFF	99.2%

The specified values apply for the combination with flame rod (sensor) and PFU 760 (logic).

12 Maintenance cycles

Burner control unit PFU requires little servicing.

The device and user statistics can be displayed using the engineering tool BCSoft for further diagnostics and trouble-shooting. The user statistics can be reset using engineering tool BCSoft.

13 Legend

88	Display
88	Blinking display
	Safety interlocks (limits)
	Burner start-up signal
DI	Digital input
	Ignition transformer
	Gas valve
	Air valve
	Flame signal
P	Purge
A	External air valve control
	Burner operating signal
	Fault signal
	Reset
	Input signal
	Output signal
	Flame simulation check
Z	Ignition/High voltage
I	Ionization
	Input/Output, safety circuit
t_W	Waiting time
t_{LV}	Flame simulation delay time
t_Z	Ignition time
t_{SA}	Safety time on start-up (3, 5 or 10 s)
t_{SB}	Safety time during operation (< 1 s or < 2 s)
t_{FS}	Flame proving period
t_B	Minimum operating time
t_{BP}	Minimum burner pause time
t_{KN}	Low fire over-run time
FA	Flame failure

14 Glossary

14.1 Waiting time t_W

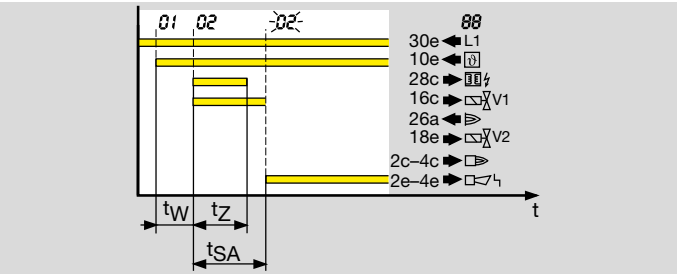

Once the start-up signal ϑ has been applied, the waiting time t_W starts to elapse. During this time, a self-test is conducted to detect errors in internal and external circuit components. If no malfunction is detected, the burner will start up.

14.2 Safety time on start-up t_{SA}

This refers to the period of time between switching on and switching off of the gas valve, when no flame signal is detected. The safety time on start-up t_{SA} (3, 5 or 10 s) is the minimum operating time of the burner and burner control unit.

14.3 Ignition time t_Z

If no malfunction is detected during the waiting time t_W, the ignition time t_Z then starts to elapse. Voltage is supplied to the pilot gas valve V1 and the ignition transformer and the burner is ignited. The duration of the ignition time is either 2, 3 or 7 seconds (depending on safety time t_{SA} selected).

14.4 Flame simulation/Flame simulation delay time t_{LV}

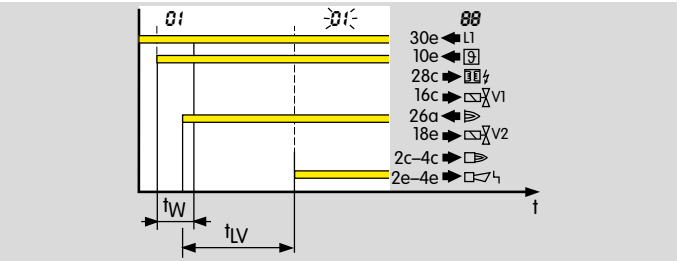

An extraneous signal (flame simulation) is a flame signal that is detected, although there should be no flame according to the program sequence. If such an extraneous signal is detected, the flame simulation delay time t_{LV} starts to elapse. If the flame simulation is discontinued during the flame simulation delay time t_{LV}, start-up can be initiated or operation continued. Otherwise, a fault lock-out occurs.

14.5 Safety time during operation t_{SB}

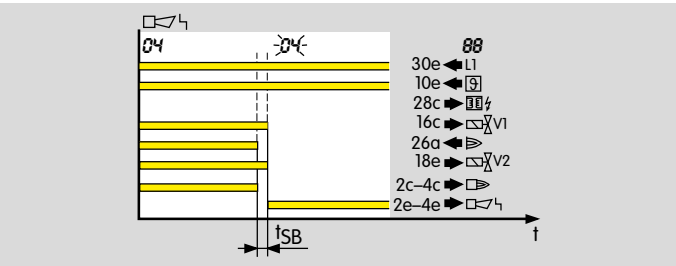

If the flame fails during operation, the valve outputs are disconnected within the safety time t_{SB}.

The default safety time during operation t_{SB} in accordance with EN 298 is 1 s. Under DIN EN ISO 13577-2, the safety time of the installation during operation (including closing time of the valves) must not exceed 3 s, see page 39 (8 Project planning information). Note the requirements of the standards!

14.6 Flame signal

If a flame is detected, the flame detector will supply a flame signal.

14.7 Fault lock-out

In the event of a fault lock-out, all valves and the ignition transformer are disconnected from the electrical power supply, and a fault is signalled. Resetting must take place manually following a fault lock-out.

14.8 Warning signal

The PFU reacts to operating faults, e.g. in the case of permanent remote resets, with a warning signal. The display blinks and shows the corresponding warning message. The warning signal ends once the cause has been eliminated.

The program sequence continues. No fault signal is activated.

14.9 Safety interlocks (Limits)

The limiters in the safety interlock (linking of all the relevant safety control and switching equipment for the use of the application, e.g. safety temperature limiter, minimum/maximum gas pressure) must isolate input (⚠) from the voltage supply.

14.10 Pilot gas valve V1

The start fuel flow rate for the pilot burner is released by pilot gas valve V1. It opens when the safety time on start-up t_{SA1} starts to elapse. It remains open until the burner is switched off again by a controlled shut-down or fault lock-out.

14.11 Main gas valve V2

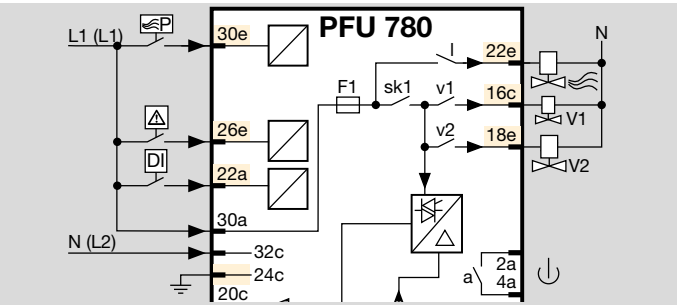

The start fuel flow rate for the main burner is released by main gas valve V2. It opens when the safety time on start-up t_{SA2} starts to elapse. It remains open until the burner is switched off again by a controlled shut-down or fault lock-out.

14.12 Continuous operation

The gas burner runs continuously for more than 24 hours.

14.13 Air valve

The air valve can be used

- for cooling,
- for purging,
- to control the burner capacity in ON/OFF mode and in High/Low mode when using a pneumatic air/gas ratio control system.

14.14 Diagnostic coverage DC

Measure of the effectiveness of diagnostics, which may be determined as the ratio between the failure rate of detected dangerous failures and the failure rate of total dangerous failures

NOTE: Diagnostic coverage can exist for the whole or parts of a safety-related system. For example, diagnostic coverage could exist for sensors and/or logic system and/or final elements. Unit: %

see EN ISO 13849-1

14.15 Mode of operation

High demand mode or continuous mode

Operating mode, where the frequency of demands for operation made on a safety-related system is greater than one per year or greater than twice the proof-test frequency

see EN 61508-4

14.16 Safe failure fraction SFF

Fraction of safe failures related to all failures, which are assumed to appear

see EN 13611/A2

14.17 Probability of dangerous failure PFH_D

Value describing the likelihood of dangerous failure per hour of a component for high demand mode or continuous mode. Unit: 1/h

see EN 13611/A2

14.18 Mean time to dangerous failure $MTTF_d$

Expectation of the mean time to dangerous failure

see EN 61508

For more information

The Honeywell Thermal Solutions family of products includes Honeywell Combustion Safety, Eclipse, Exothermics, Hauck, Kromschröder and Maxon. To learn more about our products, visit ThermalSolutions.honeywell.com or contact your Honeywell Sales Engineer.

Elster GmbH
Strotheweg 1, D-49504 Lotte
T +49 541 1214-0
hts.lotte@honeywell.com
www.kromschroeder.com

© 2025 Elster GmbH

We reserve the right to make technical modifications in the interests of progress.

PFU 760 · Edition 05.25 · EN