MF2 CONTROL BOX

CONTROL BOX FOR FORCED DRAUGHT BURNERS FOR GAS AND OIL FUEL

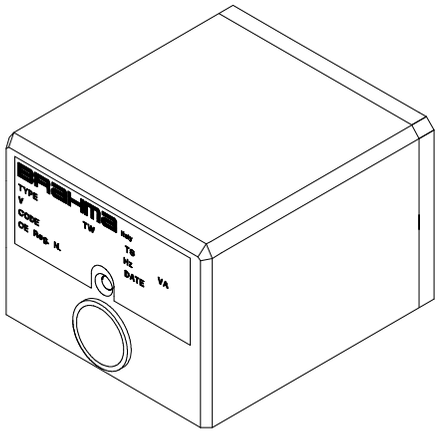

DESCRIPTION

The MF2 control box is suitable for draught burners for gas and oil fuel, for civil and industrial applications, with two flame levels. This control can alternatively employ as detection flame sensor both a probe, which makes use of the rectification property of the flame (ionization), and a UV phototube.

According to TÜV Bayern, Monaco, the control is in compliance with the German regulation DIN 4788, part 3 , for power up to 350KW. It also obtained the DIN-DVGW 89.09fBN approval, now expired and not renewable.

The “Laboratorio di Macchine e Termotecnica del Centro Studi ed Esperienze” in Rome - Capannelle tested the MF2 control for power up to 2332KW, which obtained the certification n° 3704/187/77/21 and the approval of the Ministry of the Interior for fire prevention (circulars n°68 and n°42).

TECHNICAL DATA:

Supply voltage:	220V (-15%+10%) 50Hz (±5%)
on request:	110V
Operating temperature range:	-10°C +60°C
Protection degree:	IP40
Starting power consumption:	9 VA
Operating power consumption:	3,5 VA
Contact rating	I max
- burner motor:	4 A
- valves (EV1, EV2):	2 A
- ignition transformer:	2 A
- alarm:	1 A
- regulators (T, PA, PG):	6 A
Times:	
- prepurge time (TV):	30 s
- safety time (TS):	3 s
- drop out time on running flame failure:	<1 s
- delay between EV1 - EV2:	30 s
- postpurge time:	5 s
Flame control	
- minimum ionization current:	0,5 µA
- recommended ionization current:	7 µA
- minimum insulation resistance of cable and flame detector device to earth:	> 50 MΩ
- voltage on the detection probe:	350 V
- recommended operating voltage with phototube:	>15µ A
Weight including socket:	600 g

CONSTRUCTION

The components of the control are fixed on a frame made of pressed thermohardening material, with high dielectric resistance. The enclosure protects the control from mechanical damages, dust and dirt coming from the outside during the installation.

Flexible unipolar conductors of different sizes connect the components of the control, except for the flame detection and prepurge control circuit, which is mounted on a printed circuit.

ПРОМЭЛЕКТРОНИКА / sales@prom-elec.com

OVERALL DIMENSIONS

The main overall dimensions of the control box inclusive of connecting sockets are shown in Fig.1.

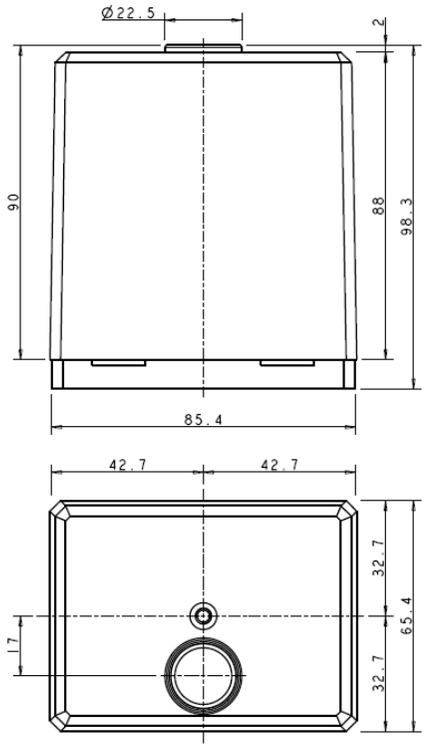

Fig.1

ACCESSORIES

The control is supplied with inbuilt reset button and lockout signal.

It can be fitted with UV phototube sensors (see Fig.2) and with kanthal flame detector probes in different executions (see, for instance, Fig. 3).

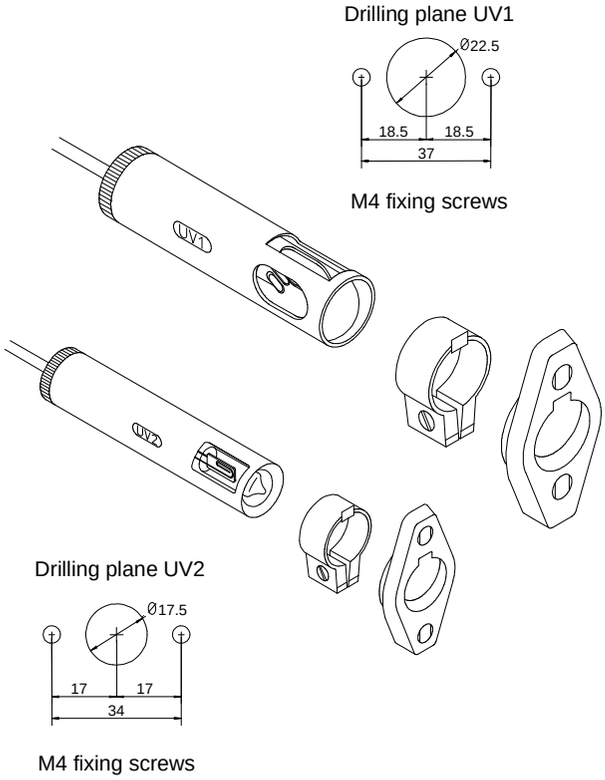

Fig.2

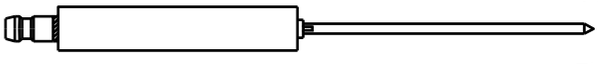

Fig. 3

CONNECTION

As regards the interconnection system of this control, several solutions are possible and different types of connecting sockets can be employed (see Fig.4 and Fig.5). Socket NE (code 18210114) differs from sockets D E (code 18210088) for its the greater number of terminals connecting neutral.

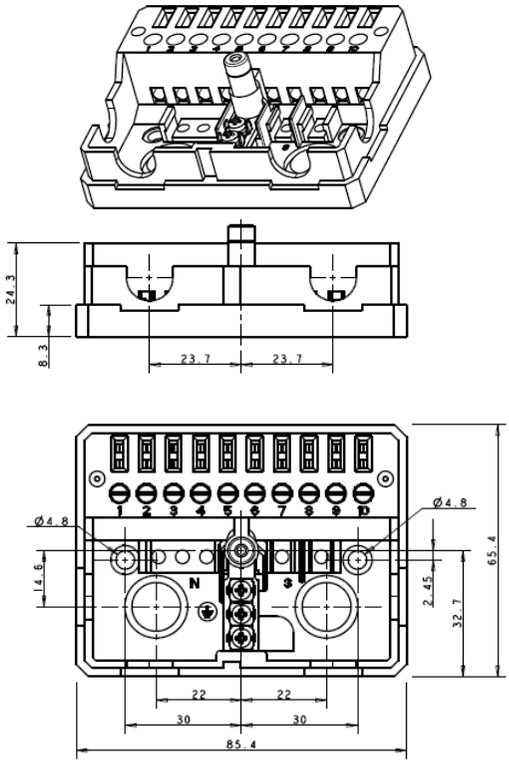

Sockets D - E

Fig.4

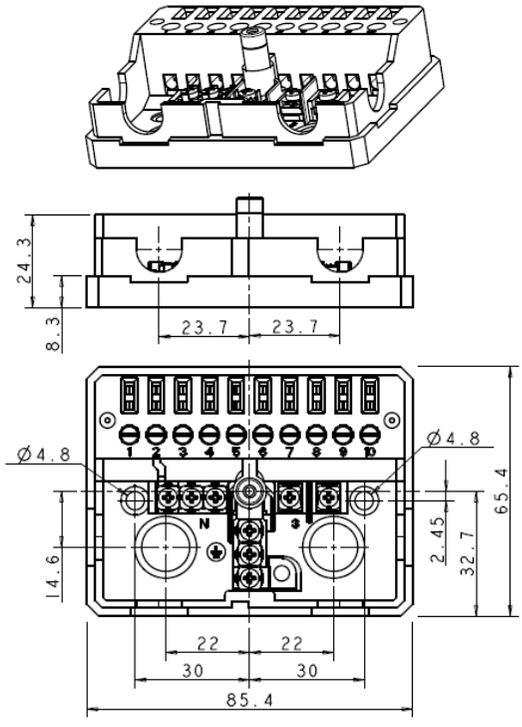

Socket NE

Fig.5

DIRECTIONS FOR THE INSTALLATION

- Automatic controls are safety devices and must not be opened. The manufacturer's responsibility and guarantee are invalidated if the control is opened.
- For technical and safety reasons a regulation shutdown must occur every 24 hours.
- The control can be mounted in any position.
- **Live** and **neutral** should be connected correctly; a mistake could cause a dangerous situation.

ПРОМЭЛЕКТРОНИКА / sales@prom-elec.com

- Make sure that the discharge of the ignition transformer does not hit the detection probe.
- The earth terminal of the control, the metal frame of the burner, the earth of the ignition transformer and the earth of the main supply must be well connected.
- The connecting wire of the detection probe must not be longer than 20 meters.
- Avoid putting the detection cable close to power or ignition cables.
- Use a heat resistant cable and detection probe, well insulated to the ground and protected from possible moisture (or water in general).
- Always check the control before the first start and also after any replacing or after a long period of non-operation of the system.
- In particular make sure that:
- The connections are corresponding to the above scheme.
- The intervention of limiters or dafety devices causes a safety shutdown according to the application.
- The level of the flame signal is sufficient.
- A short circuit between detection probe and burner casing does not cause any flame simulation.
- In running state a detection probe leakage to earth causes the lockout of the control.

TIMERS

The safety time is obtained by an electronic circuit which makes the TS vary of not more than 4% with voltage (-15% +10%) and temperature (-10 +60°C) variations.
The prepurge time is given by a compensated thermic timer. This timer, combined with the corresponding electronic circuit, allows a minimum prepurge time of 30 seconds, even in case of voltage variations (-15 +10%), ambient temperature variations (-10 +60°C), interru ption of the current supply for any time, or frequent and repeated starts of the unit. A further timer causes a lockout after a postpurge time of about 5 seconds.

OPERATING CYCLE

When thermostats and gas pressure switch are closed, the control box supplies the burner motor and the TP timer (in series with BF and the BRA relay supply module). During this first period (TP heating) the BF checks its own state and its supply network; a flame simulation in this phase causes the interruption of the TP heating and the lockout of the device within 5 seconds. If it works properly, the TP heating causes the switching of 2TP (after about 15 seconds) and 1TP (after about 30 seconds) in succession. The commutation of 1TP stops the supply to TP, BF and BRA, starting in this way the second stage (TP cooling): The delay in the deenergization of BRA enables the BRB relay to be supplied (through 1TP and 1A contacts) and to restrain through 1B and PA.
If the PA contact is open (air flow failure), the deenergization of the BRA relay is followed by the deenergization of the BRB relay, therefore the device does not continue its cycle, but remains in the prepurge stage. If it works properly (PA closed), the energization of the BRB relay is followed by the supply of the BRC relay: this stage, with the cooling of TP, allows a minimum prepurge of 30 seconds.
The interruption of the electrical supply, or the temporary opening of the air pressure switch, cause the repetition of the whole starting cycle. In case of regular operation, the TP cooling brings 1TP back to the starting position, and with the BRB and BRC relay contacts in operating state, the ignition stage begins, with the contemporary supply of the BF thermal, of the ignition transformer and of the EV1 valve.
The ignition transformer and the EV1 valve are only supplied during the safety time, which is determined by the deenergization of BRC, taking place after 2 seconds; if the burner starts operating within this delay, the BRF flame relay contacts (1RF and 2RF) are switched, stopping the supply to the BF lockout thermal and keeping the EV1 valve energized. The operating cycle is completed with the EV2 valve control, provided after about 30 seconds by 2TP going back to the starting position.
Flame failure prevents the commutation of 1RF and 2RF, therefore at the end of the safety time only the BF lockout thermal is still supplied, causing a lockout after 3 seconds. If the flame extinguishes in normal running state, the control closes both valves in less than 1 second and performs a lockout after a postpurge time of about 5 seconds.

Abnormal operation:

- Air flow at start
  The control performs a lockout within 5 seconds.
- Air flow failure at start
  If the pressure switch is not commuted within 20 seconds, the prepurge stage continues.
- Air flow failure in running position
  If the pressure switch contact opens, the device begins the prepurge stage, which continues until the pressure switch contact is open.
- Parasitic flame
  The presence of a parasitic signal flame at start, or a fault in the flame detection circuit leading to the same condition, cause a lockout within 5 seconds.

CAUTION: If for any reason the burner system is not equipped with air pressure switch, terminals n.4-6 must be short-circuited instead of n.4-1. If terminals n.4-1 were short-circuited, the control box would always perform a lockout because of a stuck-contact simulation.

RESET OF THE CONTROL

To reset the control after a lockout, act on the button after waiting for the restoration of the lockout thermal, which normally takes about 20 seconds.

ELECTRICAL SCHEME

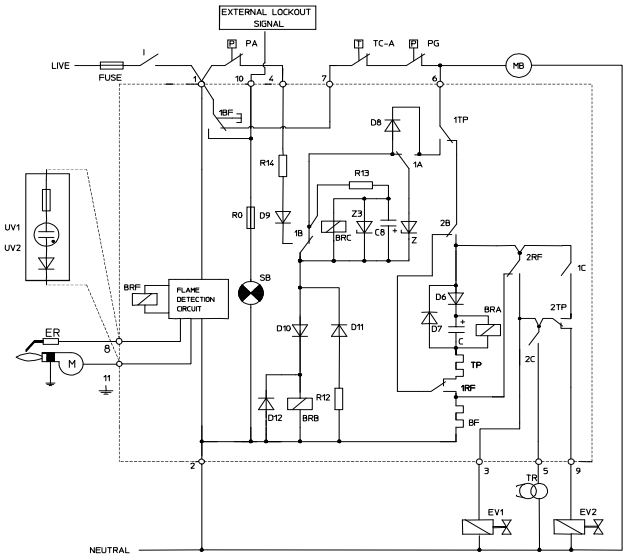

BF:	Lockout and postpurge thermal	M:	Burner casing
BRA:	Granted prepurge relay	MB:	Burner motor
BRB:	Operation relay	PA:	Air pressure switch
BRC:	Safety time relay	PG:	Gas pressure switch
BRF:	Flame detection relay	SB:	Lockout signal
ER:	Detection probe	TP:	Thermal programmer
EV1:	First gas valve	TC-A:	Thermostats
EV2:	Second gas valve	UV1 UV2:	Phototube

CONNECTION DIAGRAM

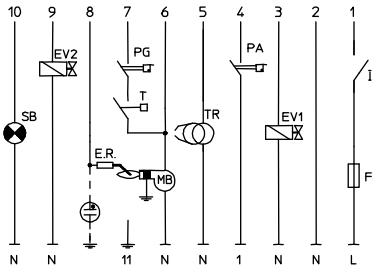

OPERATING CYCLES

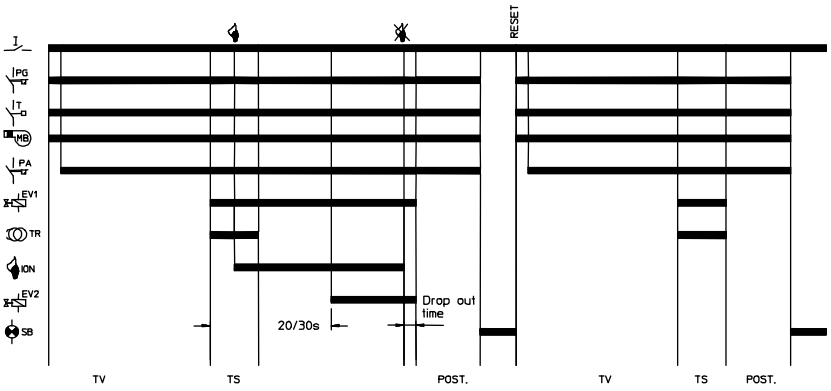

ABNORMAL OPERATION

Air pressure switch

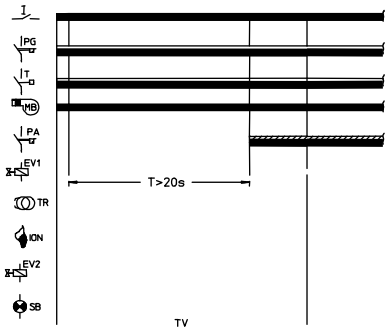

Continuous prepurge state with switching time of PA> 20s and pressure switch opening in running position.

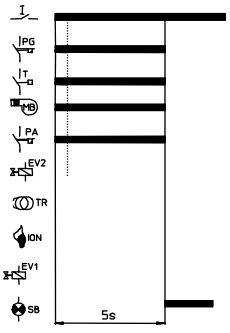

Air flow at start

Parasitic flame signal

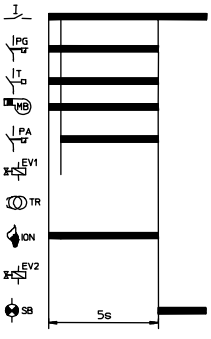

Flame signal at start

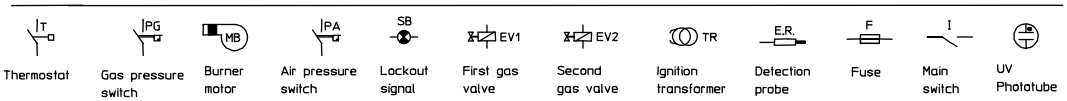

ATTENTION -> Company Brahma S.p.A. takes no responsibility for any damage resulting from Customer's tampering with the device.

BRAHMA S.p.A.
Via del Pontiere, 31
37045 Legnago (VR)
Tel. +39 0442 635211 - Telefax +39 0442 25683
http://www.brahma.it
E-mail : brahma@brahma.it

12/04/26 Subject to amendments without notice