DIGITAL MICROFLAT “N” SERIES TYPES D(M/E)N.. DT(M/E)N.. D(M/E)NO.. DT(M/E)NO..

AUTOMATIC CONTROL DIGITAL SYSTEM FOR GAS AND OIL BURNERS AND APPLIANCES

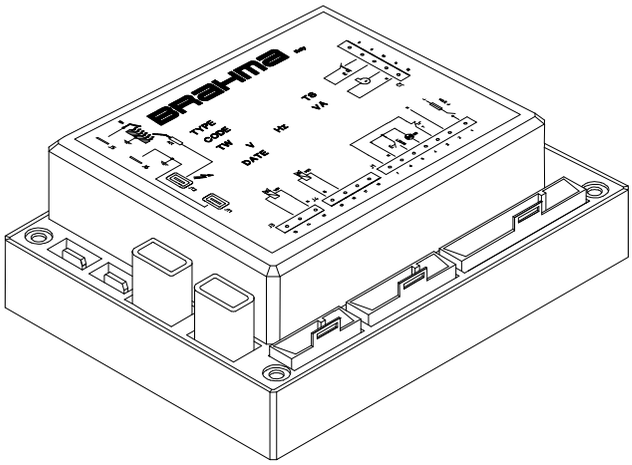

APPLICATION

The microcontroller-based controllers of the DIGITAL MICROFLAT “N” series are specifically designed to control gas atmospheric burners (with or without fan in the combustion circuit) or oil atmospheric burners in non-permanent operation applications.
These systems are provided with non-volatile or volatile lockout, in the first case restarting the controller from a safety lockout condition can be accomplished only by a manual reset of the system, while in the second case restarting the controller from a safety lockout condition can be achieved only by the interruption of the power supply and its subsequent restoration (and not by switching the heating demand device).
The automatic controllers of this series are suitable for:

- Combi boilers;
- Heating boilers;
- Steam boilers;
- Hot air generators;
- Radiant tube heaters;
- Fan-assisted convector heater ;
- Water heater;
- Power washer;
- Furnaces;
- Monoblock burners.

The DIGITAL MICROFLAT “N” series keeps the main features and reliability of the previous MICROFLAT and DIGITAL MICROFLAT series, and in addition it’s got options related to the driving of auxiliary motors, direct current valves, modulating valves among which the new Brahma valve type VCM0x. Besides, this series can be employed also in oil appliances.
The flexibility of the microcontroller-base technology creates different possibilities related to the installation times and to the operation modes. The systems of this series are suitable to be used in gas fired hot air generators in accordance with EN 525, EN 1020 and EN 1319 standards or in oil fired hot hair generators in accordance with part 2 of DIN 4794 standard (December 1980 edition related to the hot air generators, only in version TW = 20s and TS = 5s).

FEATURES

Table 1 and table 2 show the main features of this series. Other important features are:

- **EC**- type certification (CE PIN **0694BP0610**) in accordance with the European Gas Appliance Directive 90/396/EEC and following amendments of 93/68/EEC Directive;
- In accordance with EN 298:2003-09 (European Standard for automatic gas burner control systems and flame detection);
- In accordance with EN 230:2005 (European standard for automatic oil burners control systems and flame detection);
- A microcontroller based technology for precise and repeatable installation times;
- Two independent safety contacts for driving the gas valve;
- Possibility to drive the Brahma modulating valve Type VCM0x;
- Possibility to drive the first direct current valves by means of a high voltage modulator circuit or through a bridge rectifier (integrated);
- Output employable for the control of the second stage (intermittent pilot system), for the control of auxiliary fans or acting as a NO auxiliary contact (this contact is not isolated from the main supply voltage by reinforced isolation, therefore it not suitable to control SELV circuits – Safety Extra Low Voltage, e.g. 24V);

ПРОМЭЛЕКТРОНИКА / sales@prom-elec.com

- inbuilt ignition device completely of solid state design, highly efficient and equipped with a EMC filter-suppressor;
- Possibility of connecting a resistor (100 ÷ 470 Kohm) in series to the lockout signal output in order to prevent the controller damage in case the lockout button connections are inverted by chance with the lockout signal connections ;
- Possibility to be connected to a user interface module with diagnostic and modulation parameters setting functions;
- Flame detection using the rectification property of the flame (ionization, only for gas appliances) or a photocell (only for the oil appliances). For further information see the paragraph related to the flame monitoring;
- Direct ignition of the burner or ignition by means of an intermittent pilot;
- Multiple ignition attempts. In the standard mode the controller proceeds to the lockout condition if no flame is detected at the end of safety time. Upon request, with option Ynn, it's possible to set nn number of recycle attempts before lockout.
- Possibility to be connected to phase-phase power supply systems.

Table 1 – Main features of DIGITAL MICROFLAT "N" series for gas appliances

Type	*Reset*	*V* (1)	*EV2* (2)	*TS* (3)	*EN 298 Code*
DMN11	Manual				AMCLXN
DMN12	Manual		*		ATCLXN
DMN31	Manual	*			FMCLXN
DMN32	Manual	*	*		FTCLXN
DEN11	Electrical				AMCVXN
DEN12	Electrical		*		ATCVXN
DEN31	Electrical	*			FMCVXN
DEN32	Electrical	*	*		FTCVXN
DTMN11	Manual			*	AMCLXN
DTMN12	Manual		*	*	ATCLXN
DTMN31	Manual	*		*	FMCLXN
DTMN32	Manual	*	*	*	FTCLXN
DTEN11	Electrical			*	AMCVXN
DTEN12	Electrical		*	*	ATCVXN
DTEN31	Electrical	*		*	FMCVXN
DTEN32	Electrical	*	*	*	FTCVXN

Table 2 – Main features of DIGITAL MICROFLAT "N" series for oil appliances

Type	*Reset*	*V* (1)	*EV2* (2)	*TS* (3)	*EN 230 Code*
DMN31O	Manual	*			FMCLXN
DMN32O	Manual	*	*		FTCLXN
DEN31O	Electrical	*			FMCVXN
DEN32O	Electrical	*	*		FTCVXN
DTMN31O	Manual	*		*	FMCLXN
DTMN32O	Manual	*	*	*	FTCLXN
DTEN31O	Electrical	*		*	FMCVXN
DTEN32O	Electrical	*	*	*	FTCVXN

(1) Combustion motor-fan
(2) EV2 valve: this output can be used to signal the flame presence to a remote device.
(3) Safety Thermostat: Opening the safety thermostat causes a recycle followed by lockout.

TECHNICAL DATA

Nominal power supply voltage	220-240V~ @ 50-60 Hz
Power consumption:	30 VA
Operating temperature:	-20 ℃ ÷ +70 ℃
Humidity:	Max. 95% at +40 ℃
Protection degree:	IP00
Internal fuse:	4 A fast-blow type
External fuse (recommended):	3.15 A fast-blow type **(5)**
Max. total weight:	About 200 g

(5) The external fuse value must be selected according to the maximum applied load. This value must not anyway exceed the internal fuse value.

Times

Waiting/prepurge time (TW/TP):	0 … 60 s
Safety time (TS)	
- GAS versions:	3 … 120 s
- OIL versions:	5 … 10 s
Spark ignition time (TSP):	(TS-1) s
Response time in case of flame failure (GAS versions):	< 1 s
Safety time during operation (OIL versions)	< 1 s
Postpurge times:	
- for main combustion motor:	0 … 1800 s
- for auxiliary motor:	0 … 500 s
Inter-waiting or Inter-purge time:	1 … 240 s
Opening delay of EV2 or the auxiliary fan (opt. Wnn):	1 … 1800 s
Lockout delay due to flame simulation (opt. Knn):	
- GAS versions:	0 … 60 s
- OIL versions:	5 … 60 s
Lockout on PA failure to close (opt. Qnn) (6):	3 … 120 s
Lockout on TC failure to close (opt. Qnn) (7):	3 s… 30 min
Pre-ignition time:	1 … 60 s
Recycle attempts:	1 … 10
Painting:	Upon request

Maximum contacts rating

Room thermostat:	0.5 A cos φ ≥ 0.4
EV1 valve:	
– Standard or with opt. C1:	0.5 A cos φ ≥ 0.4
– With opt. C(2-3-4-5-6):	80mA$_{DC}$
EV2 valve – tangential fan:	0.5 A cos φ ≥ 0.4
Combustion fan:	0.5 A cos φ ≥ 0.4
Ignition transformer (8):	0.5 A cos φ ≥ 0.4
Preheater (9):	0.5 A cos φ = 1
Lockout signal:	
– Standard **(10)**:	50 mA cos φ = 1
– With opt. R **(10)**:	0.5 mA cos φ = 1
– With opt. F **(11)**:	1.0 A cos φ = 1
User interface:	5 mA

(6) Air pressure switch – Only in the gas versions
(7) Preheater thermostat – Only in the oil versions
(8) Only in versions provided with option "PR" and in the oil versions
(9) Only in the oil versions
(10) Load driven by opto-triac.
(11) Load driven by triac.

Under-voltage and over-voltage protection:
In case the power supply voltage is lower than about 165V$_{AC}$ or higher than 290V$_{AC}$ the controller will go to the safety condition. It will restart when the power supply voltage will be between about 175V$_{AC}$ e 280V$_{AC}$.

Maximum length of external components cables:

Room thermostat:	20 m
Reset – remote lockout signal:	20 m
Ignition device (high voltage)**:**	2 m
The rest of the cables (loads power supply cables, air pressure switch cable and connection cable to the user interface board)**:**	1 m

Flame monitoring – gas versions

The flame detector uses the rectification property of the flame.
An important safety aspect is that the controller is more sensitive to flame at start or during the waiting/pre-purge time (negative differential switching).

Minimum ionization current:	0.5 µA
Upon request:	1.2 µA
Recommended ionization current:	3 ÷ 5 times the minimum one
Minimum insulation resistance of detection electrode and cable to earth:	≥ 50 MΩ
Maximum electrode parasitic capacity :	≤ 1nF
Maximum short-circuit current :	< 200µA AC

Flame monitoring – Oil versions

In this type of application, flame is detected by a sensor or a photocell.
The following table shows the various photocell models produced by BRAHMA and classified according to their sensitivity.
Overall dimensions and fixing templates are shown in paragraph "Accessories"

Type	*Sensitivity*	*Side*
FC11	1.5 ÷ 6.5 lux	Lateral and frontal
FC13 red	1.5 ÷ 6.5 lux	Lateral and frontal
FC13 blue	1.5 ÷ 3.0 lux	Lateral and frontal
FC14 red	1.5 ÷ 6.5 lux	Lateral and frontal
FC14 blue	1.5 ÷ 3.0 lux	Lateral and frontal

Integrated ignition device (12)

Peak voltage (13):	15 kV
Upon request:	18 kV
Peak current:	800 mA
Spark repetition frequency (14):	25 Hz
Upon request:	1 … 50 Hz
Recommended discharge distance:	2 ÷ 4 mm
Consumption:	2.5 VA
Spark Energy:	20 mJ

(12) Available only for gas versions.
(13) Value measured with a 30 pF load.
(14) ATTENTION: The ignition device output is not safe to touch if the spark repetition frequency is higher than 25Hz; in this case installation must be provided with further protection.

Construction

The plastic case (and the PCB painting if requested) protect the controller against mechanical damage caused by crash, tempering , dust , and contact with external ambient.
Thanks to a surface mounting components (which constitutes the "logic nucleus" of the system) and to the use of an innovative **patented** circuit of ours that generates the ignition discharge reducing to the minimum the emitted EMC, have allowed to reduce the dimensions of the controller PCB. So that even the most complicated version takes a very limited space.
A varistor protects the controller from peak tensions on the mains supply due to, for instance, atmospheric discharges such as thunderbolts. An internal accessible fuse protects the controller relays in case of short circuit on the outputs (valves, fan and lockout signal).

Overall dimensions

The controllers of the DIGITAL MICROFLAT series can be supplied in different executions but with the same case.
Figure 1 shows the controllers overall dimensions.

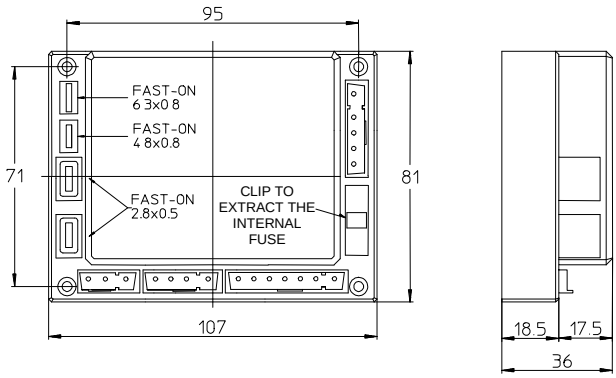

Fig. 1 – Overall dimensions

Possible fixing systems

Top:	self-tapping screw UNI6951AB 2.9x22 screw M3x22 UNI6107
Bottom:	screwplast thread forming screw ISO0003 F 3.5x13 screwplast thread forming screw ISO0003 F 3.9x13

Connection

Employing non-reversible connectors with a different number of poles makes the connection easy and reliable.
One-way fast-on connectors of different sizes for ignition and detection electrodes permit their easy installation and replacement.
The dual output ignition device allows spark generation on one point (2a), two points (2b) or between two electrodes isolated from the metal frame of the burner (2c), see Fig.2. The (2c) configuration assures a limited EMC emission.

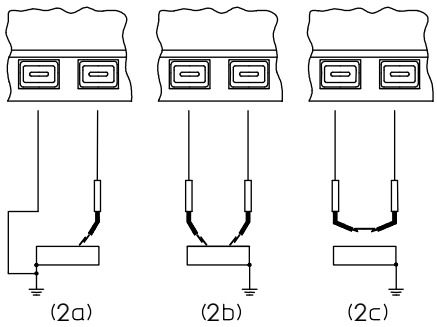

Fig. 2 – Ignition transformer connections

IMPORTANT NOTE

In order to further reduce tradio interference and increase the controller immunity ***it's strongly recommended*** to insert a wire-wound power resistor with a value between 1kΩ e 4.7kΩ between the high voltage cables and the related discharge electrodes.

Strain relieves, a sufficient number of earth terminals and neutral terminals should be provided in the appliance or in external connection boxes.
The control systems types DTMN…/DTEN… are provided with the possibility to be connected to a safety thermostat TS (as shown in Fig.3) which interrupts the EV1 gas valve power supply and causes a safety lockout after a delay which is the sum of waiting (or pre-purge) and safety times. If a self-resetting safety thermostat is applied (a condition existing exclusively in the manual rest controllers), the restoration time of this thermostat in the appliance must be longer than the total time needed for the maximum allowed number of re-ignition attempts in order to reach lockout.

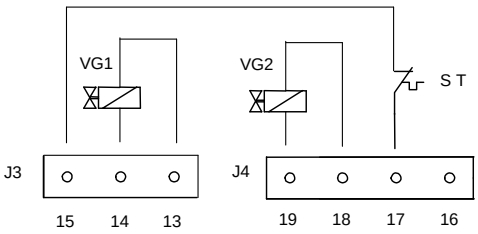

Fig. 3 – Safety thermostat connection

Standard accessories

The control systems are usually supplied with a kit of female connectors and/or a reset button (see Fig.2).

Do not fit terminals and female connectors of different types.

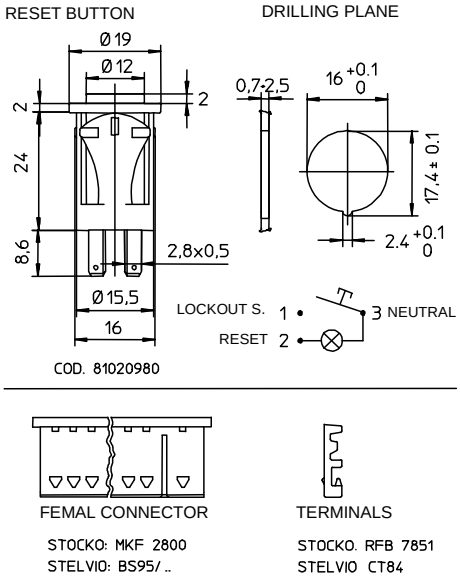

Fig. 4 – Standard accessories

The following figure shows the various types of flame sensors produced by BRAHMA and employable in the oil appliances.

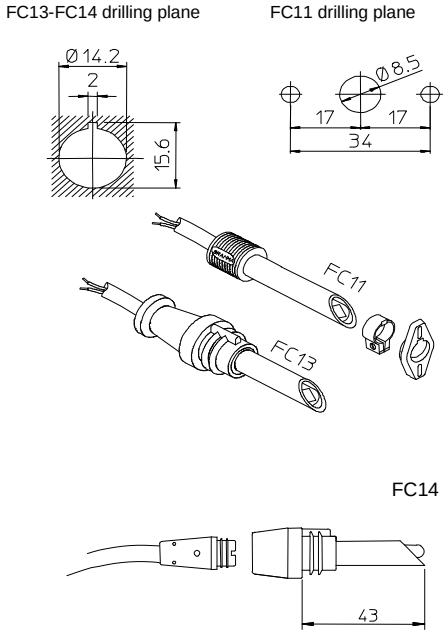

Fig. 5 – fixing systems of FC1(1-3-4) sensors

Installation directions

- The controllers are safety devices; guarantee and responsibility of the manufacturer will be debarred if the products are tempered with by the user;
- The system is designed to stay in running position for less than 24h (system for non-permanent operation). Reaching this limit causes a regulation shutdown in order to allow the controller to check its efficiency.;
- The controller must be connected and disconnected without power supply;
- The controller can be mounted in any position;
- Avoid exposure to dripping water;
- A ventilated installation ambient and a quite low temperature ensure the longest life of the controller;
- Before installing or replacing the controller make sure that its type, code and times are those required;
- The appliance in which the controllers are installed must provide adequate protection against the risk of electric shock (at least IP20)

Electrical installation

- The applicable national regulation and European standards (Ex. EN 60335-1/ EN 50165) related to the electrical safety must be respected;
- The gas versions, supplied with detection electrode, can be equipped with a polarity recognition. Not respecting the phase-neutral polarity causes a non-volatile lockout at the end of the safety time ;
- Before starting the system check the wiring carefully. Wrong connections can damage the controller and compromise safety;
- The earth terminal of the controller, the metal frame of the burner and the earth on the mains supply must be well connected;
- Avoid putting the detection cable close to power or ignition cables;
- Use a heat resistant detection electrode well insulated to ground and protected from possible moisture (or water in general);
- Use an ignition cable as short and straight as possible and keep it far from other conductors to reduce the EMC emission (max. length< 2m and insulation voltage >25 kV).

In case of live-neutral networks with unearthed neutral or live-live network (with star center not earthed) the controller can operate correctly by means of a built-in resistor.

In the gas versions and in case of a “partial” short circuit or dispersion between phase and earth, the tension on the detection electrode can be reduced till causing lockout of the controller due to impossibility of detecting the flame signal.

Checking at start

Check the controller before the first star-up, after every overhaul and after a long period of non operation.

Before any ignition attempt make sure that the combustion chamber is free from gas, then make sure that:

- If the start-up attempt occurs without gas supply the controller goes to lockout at the end of safety time ;
- When gas flow is interrupted (while the controller is in running state) the power supply to gas valves is interrupted within 1 second and the controller proceeds to lockout after a recycle (or more than one recycle up to max. 10 according to the settings);
- Operating times and cycle are in compliance with the ones declared for the used controller type;

- The level of the flame signal is sufficient (see Fig. 7 and Fig. 8 for the measuring method to be adapted in case of controllers for gas and oil appliances respectively);
- The ignition electrodes are adjusted in the most stable way for a 2-4 mm air spark gap;
- The intervention of regulators, limiters or safety devices causes a shut down of the controller according to the application type.

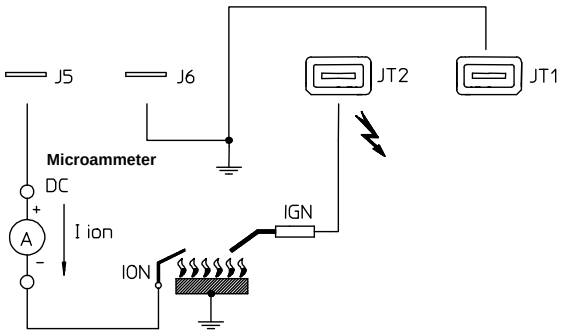

Fig. 7 – Flame signal measurement method in gas versions.

IMPORTANT NOTE

The measurement of the ionization current can be effected exclusively in the controllers configured for dual electrode.
In controllers configured for single electrode it's dangerous for the user to insert a measurement instrument in series with the detection electrode.

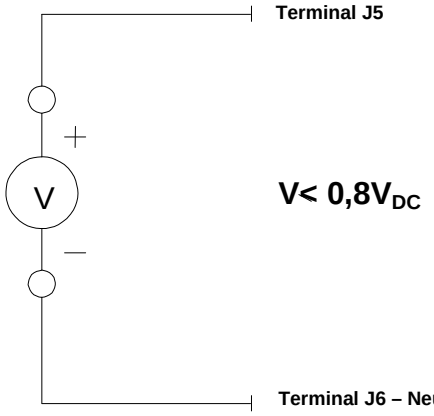

Fig. 8 – Flame signal measurement method in oil versions.

GAS versions - Operation

The following description refers to the standard operation cycle controllers.
At every start the controller proceeds to a self-checking of its own components. During waiting time (TW) or pre-purge time (TP) the internal circuit monitors the correct functioning of the flame signal amplifier: A spurious flame signal or a fault in the amplifier which corresponds to the flame condition prevent the controller from starting.
In the types provided with fan control, before pre-purge time starts, the controller checks the air pressure switch contacts to ensure a 'no air-flow' condition. Only if the test is positive the pre-purge time (TP) starts due to the commutation of the air pressure switch.
At the end of the waiting (TW) or pre-purge time (TP) the EV1 valve and ignition device are energised and the safety time begins (TS).
If flame is detected during the safety time the ignition device is de-energised and, in the models where it is provided, the main gas valve EV2 energized. Conversely, if no flame is detected during the safety time then at the end of the same the controller proceeds to lockout, the EV1 valve is closed, the ignition device is de-energised and the lockout signal is activated.
Flame failure during the safety time causes the ignition device to be activated within 1 second.
See cycle diagram to better understand the operation of each controller.

OIL versions - Operation

The following description refers to the standard operation cycle controllers.
At every start the controller proceeds to a self-checking of its own components. When the room thermostat is closet the preheter is energized immediately; once the correct oil temperature is obtained the preheater thermostat switches and signals the start of the ignition cycle to the controller: the burner motor and the ignition transformer are energized (Pre-purge time TP and pre-ignition time) and the operation of the flame amplifier is checked. Any fault leading to a spurious flame signal prevents the controller from starting which causes a lockout within 10 seconds. In case the preheater thermostat opens during pre-purge time, the controller deactivates the motor fan and the ignition transformer and proceeds to the waiting position. This condition remains till the preheater thermostat closes again; conversely the controller goes to lockout within 10 minutes.
At the end of pre-purge time TP, the safety time begins and the controller energizes the EV1 valve. If no flame is detected within the end of safety time TS, then the controller goes to lockout and de-energizes the motor fan, the ignition transformer and especially the EV1 valve while the lockout signal is activated. Conversely, at the end of the safety time TS the ignition transformer is deactivated and the second stage valve EV2 is energized.
See cycle diagram to better understand the operation of each controller.

Operation cycle variation

The possible cycle variations of the controllers are as follows:

- *Option 6 ("A", "B"): ignition mode*

The spark can be activated during all the safety time TS (option "A") or deactivated immediately when a flame signal is detected (Option "B").

- *Option 9 ("C3", "C4", "C5"): BRAHMA modulating valve type VCM0x with soft-start function*

The soft-start function allows the controller to control the value of the valve supply current avoiding the maximum opening of the valve during ignition (option "C3"), during ignition and the delay time for the attainment of the second range value (option "C4) or during ignition, the delay time for the attainment of the second range value and the operational state (option "C5") .

- *Option 11 ("X", "Wnn"): opening mode of the second stage valve EV2 or of the auxiliary fan*

The second stage valve or the auxiliary fan can be energized at the end of the safety time (options "X") or with a delay (expressed in seconds) settable upon request (option "Wnn").

- *Option 12 ("K", "Knn"):*

If a spurious flame is detected at start-up or during safety/prepurge time, the controller proceeds to immediate lockout (option "K") or with a delay (expressed in seconds) settable upon request (option "Knn").

- *Option 13 ("Qnn"): failure or insufficiency of air flow at start-up (GAS versions) or preheater thermostat failure to close (OIL versions)*

The controller locks out within 3÷120 seconds (the time is settable upon request) if insufficient or no air flow is found or if the preheater thermostat fails to switch during waiting/pre-purge time).

- *Option 14 ("S", "Snn"): failure or insufficiency of air flow (GAS versions) or preheater thermostat failure to open (OIL versions) in running position*
- In case of air flow failure (GAS versions) or preheater thermostat failure to open (OIL versions) in operational state, the controller goes to lockout immediately (option "S") or after "nn" number of events (option "Snn").

– *Option 15 ("V", "Vnn"): Flame failure in running position*

In case of flame failure in operational state, the controller proceeds to lockout immediately (option "V") or after "nn" number of events (option "Vnn").

– *Option 17 ("Pnn", "PTnn"): post-purge time on the main combustion motor fan*

A post-purge action on the main combustion motor fan is effected (the time is settable upon request).

With option "Pnn" post-purge is effected regardless of heating demand; conversely, with option "PTnn" post-purge can be interrupted by the heating demand restoration and consequently the controller goes to an ignition recycle.

– *Option 18 ("Onn"): post-purge time on the auxiliary motor*

A 1 to 500 s post-purge action on the auxiliary fan is effected (the time is settable upon request). This option can be implemented only in the controllers provided with auxiliary fan management (option "T1").

– *Option 19 ("Ynn"): recycle attempts*

The controller effects multiple recycle attempts after lockout (the attempts number is settable upon request).

– *Option 20 ("Dnn"): recycle attempts due to ignition or flame failure in running position*

The controller makes "nn" number of recycles due to ignition failure at the end of safety time or to flame failure in running position.

– *Option 21 ("Inn"): inter-waiting or inter-purge time*

A waiting or pre-purge time (expressed in seconds) starts after a failed ignition attempt and before the next recycle attempt..

– *Option 23 ("G"): Air pressure switch or preheater thermostat checking*

The controller starts its ignition cycle without checking the air pressure switch (in the gas versions) or the preheater thermostat (in the oil versions).

– *Option 24 ("Jnn"): pre-ignition time*

The transformer is activated at the end of the waiting/purge time and before the beginning of the safety time (time is settable upon request.

NOTE: in the OIL versions the pre-ignition time coincides with the pre-purge time .

Controller reset

Non-volatile lockout (manual reset)

When the controller goes to a non-volatile lockout, in order to reset the system the reset button must be pressed till the lockout signal is shut off.

Volatile lockout (electrical reset)

In case of a volatile lockout the controller can be reset by interrupting and then restoring the power supply. It's not possible to reset the system by shutting off the heating demand device.

Communication interface

In case option no. 26 ("U") is required, the ignition and flame monitoring device can send and receive data according to a low speed communication protocol developed by BRAHMA S.p.A .

The main function of this communication protocol is diagnosing the controller status and setting the modulation parameters in case the BRAHMA modulating valve type VCM0x is employed.

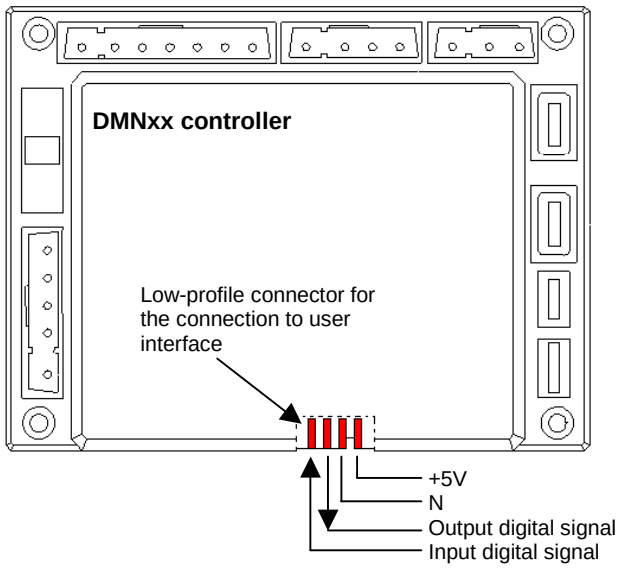

Fig. 9 – Connection diagram between BRAHMA DMN controller and the related interface board

CONTROLS DENOMINATION

Type **Options**

D (1) (2) **N** (3) (4) (5) (6) (7) (8) (9) (10) (11) (12) (13) (14) (15) (16) (17) (18) (19) (20) (21) (22) (23) (24) (25) (26) (27) (28)

Type description

(1) **Safety thermostat (ST)**
- No letter: Safety thermostat not available. Standard mode
- T: With safety thermostat

(2) **Type lockout**
- M: Non –volatile lockout
- E: Volatile lockout

(3) **Combustion motor fan**
- 1: Not available
- 3: Available

(4) **Valve**
- 1: Direct ignition
- 2: Intermittent first stage

(5) **Ignition transformer – Controller version (GAS - OIL)**
- No letter: Controller for GAS applications – Integrated ignition transformer. This is the standard mode
- PR: Remote electronic ignition transformer.
- O: Controller for OIL applications – Remote electronic ignition transformer

Options description

(6) **Ignition mode**
- No letter: Ignition spark operates for TSP time (TS-1). Standard mode
- A: Ignition spark operates for TS
- B: Ignition spark is switched off when flame presence is detected

Note: *Options "A" and "B" are available in dual-electrode version (separate ignition and detection electrodes)only.*

(7) **Peak ignition voltage of the integrated transformer (GAS version only)**
- No letter: 15 kV. Standard mode
- H: 18 kV

(8) **Spark frequency of the ignition transformer**
- No number: 25 Hz. Standard mode
- nn: See "Ignition transformer" in *TECHNICAL DATA* paragraph

(9) **First stage gas valve EV1**
- No letter: Standard valve in alternate current. Standard mode
- C1: $230V_{DC}$ valve with an embodied rectification bridge (Graetz) and a protection resistor against peak current
- C2: BRAHMA valve type VCM0x
- C3: BRAHMA valve type VCM0x with soft-start current control during the safety cycle time
- C4: BRAHMA valve type VCM0x with soft-start current control during the safety cycle time and soft-start current control during a waiting time before passing to the max power.
- C5: BRAHMA valve type VCM0x with soft-start current control during the safety cycle time, during the waiting time and during the running position.
- C6: Generic $230V_{DC}$ valve : possibility to drive it by means of an in-built modulator circuit

Note: *The soft start function allows to control the modulation current value in order to check if it remains within a specific gap. This control permits to check if any circuital fault is present in the controller. In case the controller detects a modulation current value outside of the specific gap, it goes to the lockout condition.*

(10) **First stage gas valve EV1 series BRAHMA type VCM0x – Working feature**
- No letter: Not available. Standard mode
- M1: 1 gas valve used for intermittent first stage (see *"TECHNICAL DATA"* and *"OPERATION CYCLE"* paragraph)
- M2: 1 gas valve used for slow opening application (see *"TECHNICAL DATA"* and *"OPERATION CYCLE"* paragraph)
- M3: 2 gas valves used for intermittent first stage (see *"TECHNICAL DATA"* and *"OPERATION CYCLE"* paragraph)
- M4: 2 gas valves used for slow opening application (see *"TECHNICAL DATA"* and *"OPERATION CYCLE"* paragraph)

(11) **Opening of the second stage gas valve EV2 or the auxiliary combustion motor when the flame is present**
- No letter: No delay time . Standard mode
- X: At the end of the TS time
- Wnn: With delay if requested (see *"TECHNICAL DATA"* paragraph)

Nota: *Options "X" and "Wnn" (in case of the second stage gas valve EV2) are available only in dual electrodes configuration (sparking electrode and ionization electrode are separated).*

(12) **Lockout for flame simulation**
- No letter: Not available (the control remains in continuous waiting/pre-purge state). Standard mode
- K: Lockout condition
- Knn: Lockout condition with delay if requested (see *"TECHNICAL DATA"* paragraph)

(13) **No or insufficient air flow at starting (gas versions); no switching of the thermostat TC at starting (oil versions)**
- No letter: The controller remains in stand-by condition (gas version); or proceeds to lockout condition after 10 min from the starting cycle (oil version). Standard mode
- Qnn: Lockout condition with delay if requested (see *"TECHNICAL DATA" paragraph*)

Options description

(14) **No or insufficient air flow (gas versions) at running or thermostat TC opening (oil versions) at running**

No letter: Safety shutdown followed by stand-by condition. Standard mode
S: Lockout condition without delay
Snn: The controller proceeds to the lockout condition after a certain number "nn" of air pressure switch failures or preheater thermostat failures in running position.

(15) **Flame failure at running**

No letter: Recycling. Standard mode
V: Lockout condition without delay
Vnn: The controller goes to lockout condition after a "nn" number of losing flame signal from running position. (see *"TECHNICAL DATA" paragraph*)

(16) **Connection to the mains supply (available for GAS versions only)**

No letter: Live-neutral polarized (phase sensitive control). Standard mode
N: Not polarized

(17) **Post-purge of the main motor fan**

No letter: No post-purge. Standard mode
Pnn: The post-purge time is set if requested (see *"TECHNICAL DATA"* paragraph) and it cannot be interrupted by the heating demand restoration
PTnn: The post-purge time is set if requested (see *"TECHNICAL DATA"* paragraph) and it can be interrupted by the heating demand restoration

(18) **Post-purge of the auxiliary motor (with option "T1" only)**

No letter: No post-purge. Standard mode
Onn: The post-purge time is set if requested (see *"TECHNICAL DATA"* paragraph) and it cannot be interrupted by the heating demand restoration

(19) **Recycle attempts due to ignition failure**

No letter: Single ignition cycle after a controller shut down. Standard mode
Ynn: Multiple recycle attempts if requested (see *"TECHNICAL DATA"* paragraph)

(20) **Recycle attempts due to ignition or flame failure in running position**

No letter: No recycle attempts due to ignition failure and no recycle attempts due to flame failure in running state, are independent from each other. Standard mode
Dnn: Number of recycle attempts due to ignition failure and number of recycle attempts due to flame failure in running state , are dependent from each other.

(21) **Inter-waiting or inter-purge time**

No letter: No inter-waiting or inter-purge time. Standard mode
Inn: The inter-waiting/inter-purge time is set if requested (see *"TECHNICAL DATA"* paragraph)

(22) **Lockout indicator output**

No letter: High voltage output without any protection against cabling mistakes of the reset push button. Standard mode
R: Presence of a internal resistor to protect the reset push button against the inversion of its connections
F: Output for lockout signals with current higher than 50mA

(23) **Checking of the air pressure switch for gas versions or the preheater thermostat for oil versions**

No letter: Checking of the air pressure switch or the preheater thermostat. Standard mode
G: Without checking of the air pressure switch or the preheater thermostat

Note: *controls with option "G" are intended for special applications where a check of the air flow is not required by the standard appliance.*

(24) **Pre-ignition**

No letter: Without pre-ignition. Standard mode
Jnn: The pre-ignition time is set if requested (see *"TECHNICAL DATA"* paragraph)

Note: *Option "J" is available in dual electrodes version only (separate ignition and ionization electrodes).*

(25) **User interface**

No letter: No user interface. Standard mode
Un * Presence of the user interface module type BRAHMA (see *"TECHNICAL DATA"* paragraph)

***** ***Note***: *Letter "n" represents the reference number of the user interface. More details are available in user interface module of DMN controller data sheet.*

(26) **Second stage valve EV2 output – Auxiliary combustion motor fan – Auxiliary contact**

No letter: Second stage gas valve EV2 output (intermittent pilot appliances). Standard mode
T1: Auxiliary combustion motor fan output
T2: No auxiliary contact (this contact is not isolated from the main supply voltage by reinforced isolation, therefore it not suitable to control SELV circuits – Safety Extra Low Voltage, e.g. 24V)

ПРОМЭЛЕКТРОНИКА / sales@prom-elec.com

WIRING DIAGRAMS

The wiring diagrams below show the most complete versions of the controller. It is easy to understand which parts can be present or absent according to the different options requested.

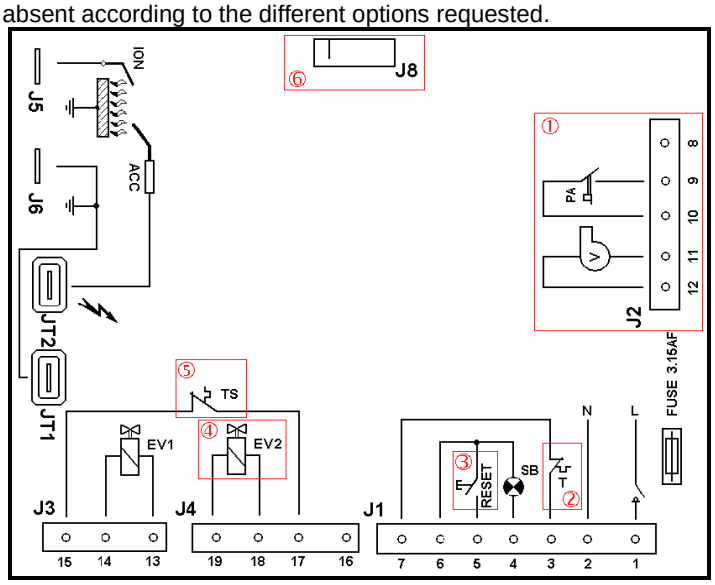

Type DTMN32 in dual electrodes mode

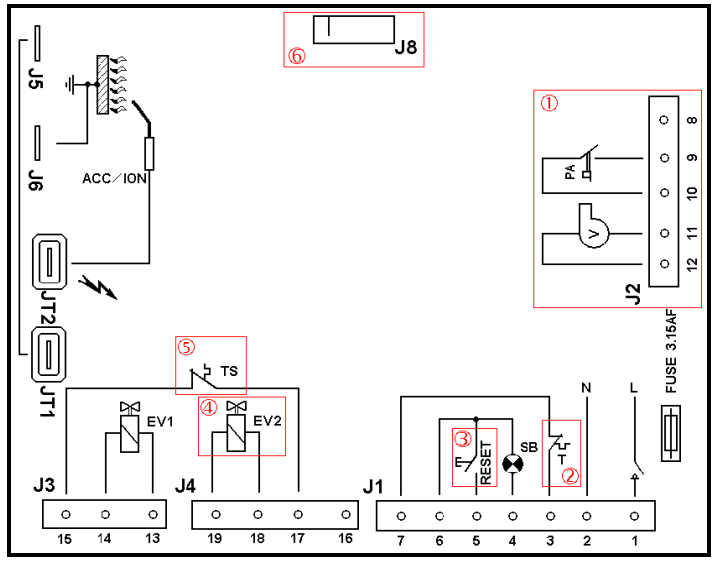

Type DTMN32 in mono-electrode mode

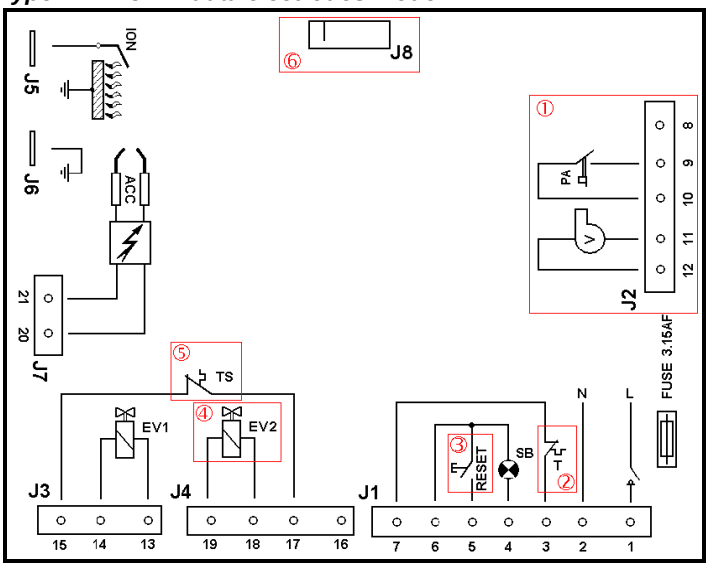

Type DTMN32PR

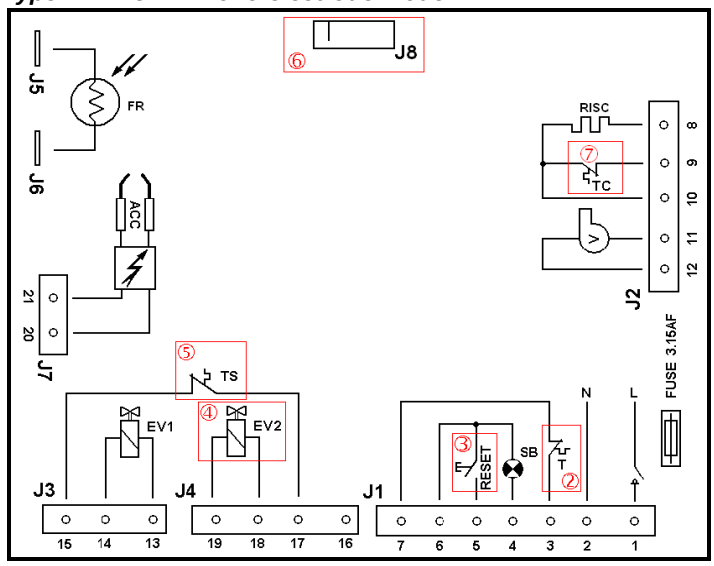

Type DTMN32O



FUSE



MAIN SWITCH



ROOM THERMOSTAT



SAFETY THERMOSTAT



AIR PRESSURE SWITCH



REMOTE RESET



PREHEATER THERMOSTAT



LOCK-OUT SIGNAL



PREHEATER



FAN



FIRST STAGE GAS VALVE



SECOND STAGE GAS VALVE



PHOTOCELL

NOTES

1) In the versions without fan motor (DMN11, DEN12,…) J2 connector is not present.

2) Controllers with option “U” connected to a BRAHMA interface with the function as a room thermostat , the thermostat T must be short-circuited.

3) Reset push button is not wired in an electrical reset device.

4) In the versions fitted with “T1” option (with auxiliary fan) the second gas valve symbol is replaced by the auxiliary fan symbol.



In the devices fitted with “T2” option (with NO auxiliary contact) there is not a second gas valve symbol and pin n°. 18 and 19 are represented by abbreviations “C“ (COMMON) and “NA“ (NORMAL OPEN).

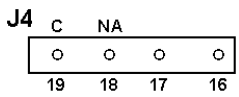

5) In the versions without safety thermostat TS, the connection is not available.

6) In the versions without option “U” (interface module BRAHMA type 807) the connector J8 is not available.

7) In case of the preheater is absent , TC thermostat must be short circuited by means of an external bridge.



Notes to dispose the device

Containing electronic components, the control unit cannot be dispose as a domestic rubbish. For a correct disposing of the device, it is necessary to consult the local references concerning the special rubbishes.

OPERATING CYCLES

STANDARD VERSIONS WITHOUT SAFETY THERMOSTAT

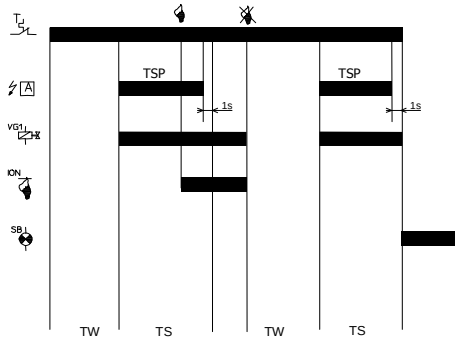

DMN11 - DEN11

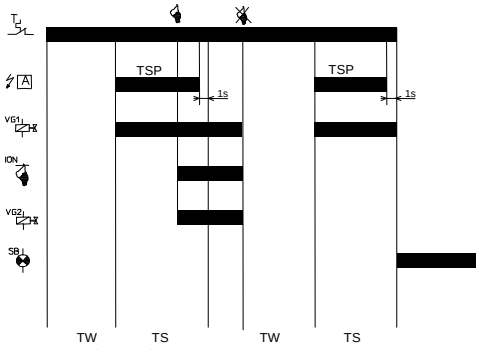

DMN12 - DEN12

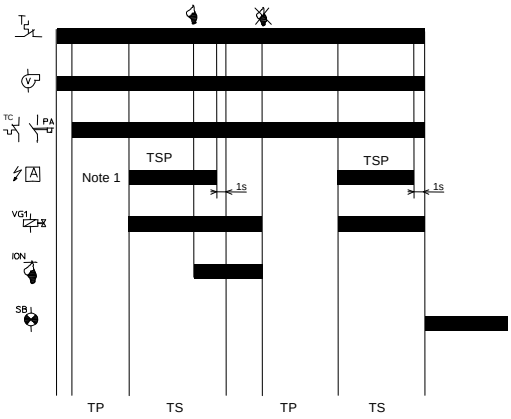

DMN31 - DEN31 - DMN31O - DEN31O

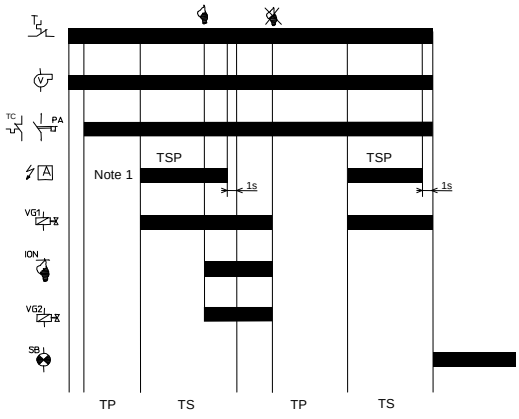

DMN32 - DEN32 - DMN32O - DEN32O

STANDARD VERSIONS WITH SAFETY THERMOSTAT

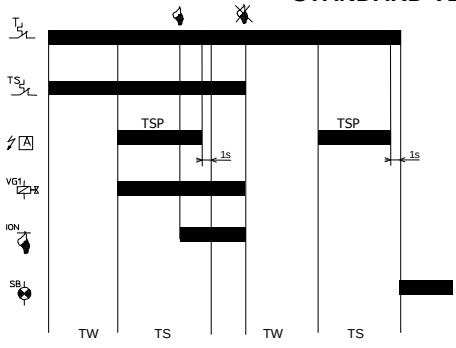

DTMN11 - DTEN11

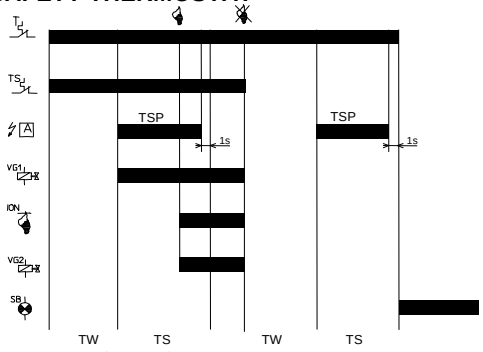

DTMN12 - DTEN12

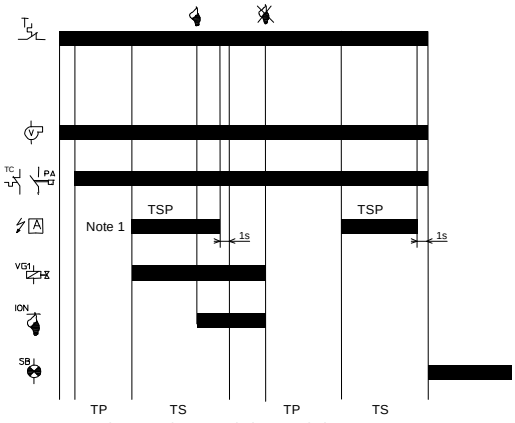

DTMN31 - DTEN31 - DTMN31O - DTEN31O

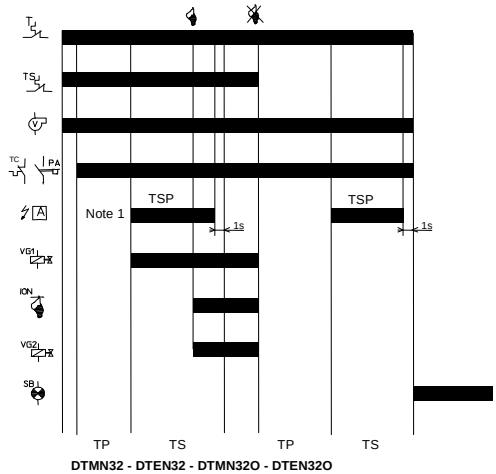

DTMN32 - DTEN32 - DTMN32O - DTEN32O

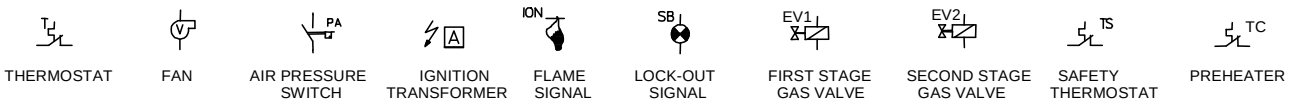

Note 1: in case of controller for oil appliances, the ignitor transformer is supplied during the entire prepurge time TP.

AVAILABLE OPTIONS

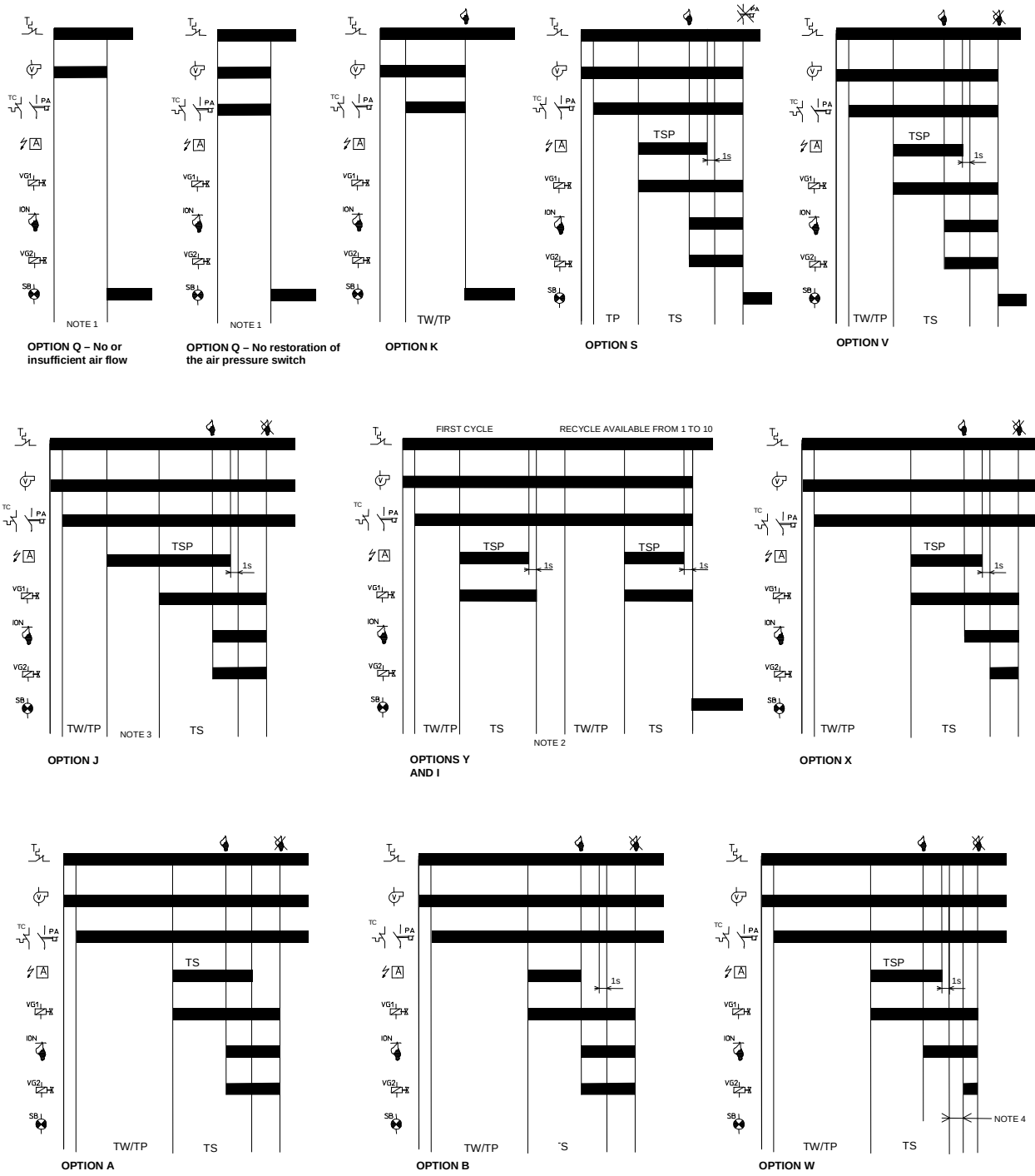

NOTE

1. Lock-out condition with delay available.
2. Inter-waiting or inter-purge time available.
   As a special setting the waiting/pre-purge time between each recycling attempt may be replaced by an inter-waiting/inter-purge time, if this sequence is allowed by final appliance.
3. Pre –ignition time available. In the oil versions the pre-ignition time and the pre-purge time are the same.
4. Second stage ignition delay time available.

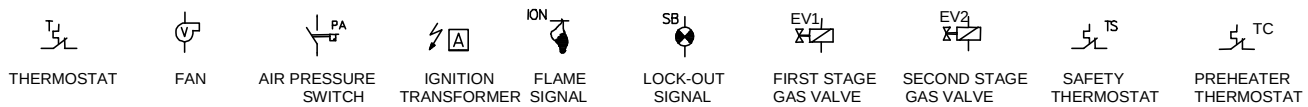

AVAILABLE OPTIONS

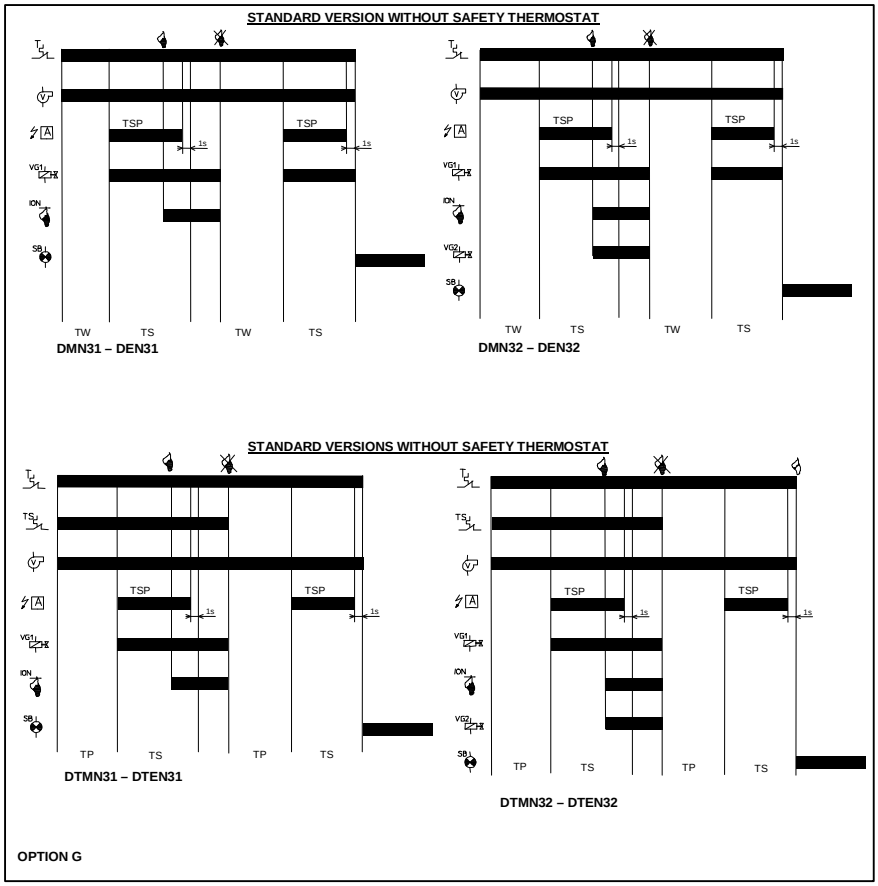

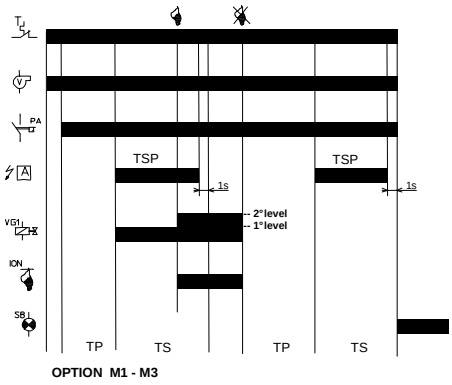

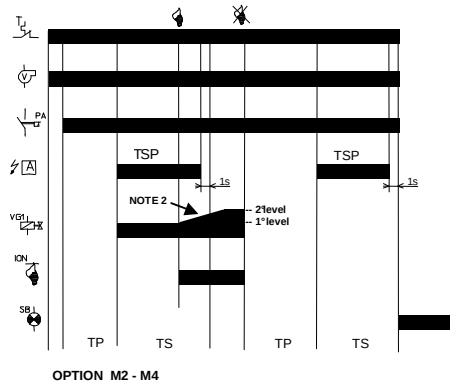

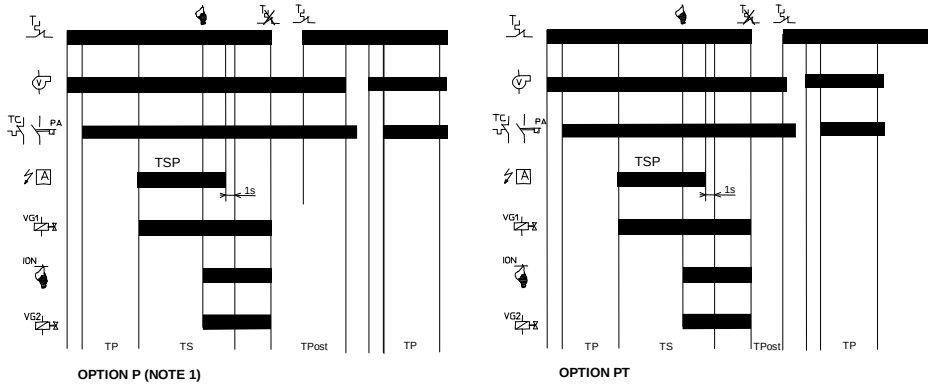

NOTE

1. The same behaviour is for the auxiliary cross flow fan in case of option "Onn".
2. The timing to pass from the first modulating level to the second one, is settable upon request.

THERMOSTAT	FAN	AIR PRESSURE SWITCH	IGNITION TRANSFORMER	FLAME SIGNAL	LOCK-OUT SIGNAL	FIRST STAGE	SECOND STAGE	SAFETY THERMOSTAT	PREHEATER THERMOSTAT	AUXILIARY MOTOR

ATTENTION -> Company Brahma S.p.A. declines any responsibility for any damage resulting from the Customer's interfering with the device

BRAHMA S.p.A.
Via del Pontiere, 31
37045 Legnago (VR)
Tel. +39 0442 635211 - Telefax +39 0442 25683
http://www.brahma.it
E-mail : brahma@brahma.it

2011/06/07 Subject to amendments without notice