EUROGAS SERIES TYPE MPI (Mixed for Medium to High Capacity)

AUTOMATIC CONTROL SYSTEM FOR FORCED DRAUGHT BURNERS FOR MIXED OIL AND GAS FUELS



DESCRIPTION

The designation MPI refers to a series of microcontroller-based devices also suitable to control forced draught burners for mixed oil and gas fuels for non-permanent operation. The MPI is a new product, as each unit, in addition to carrying out all typical burner functions, also incorporates a valve proving system checking programme which can be activated by a simple operation upon request. Wiring one control unit only instead of two is certainly a technical and economical advantage.

These controls perform non-volatile lockout, i.e. the restart of the system from the safety shutdown condition is only possible by means of the control manual reset.

Another peculiar feature is the possibility to control different types of air damper; in fact, thanks to the versatility of the control unit, the operating cycle requested by the standard in force is always respected.

This range of controls is suitable to equip multistage or modulating burners for domestic and industrial heating.

PATENT/CERTIFICATION

- EC-Type certification (PIN **0694BQ0913**) in accordance with Gas Appliance Directive 90/396 and 93/68;
- in accordance with the following standards**:**
  - **EN 298:03** (European standard for automatic gas burner ignition and flame monitoring systems);
  - **EN 676:03** (European standard for automatic forced draught gas burners);
  - **EN 1643:00** (European standard for valve proving systems);
  - **EN 267:99** (Forced draught oil burners);
  - **EN 746-1:97** (Industrial thermoprocessing equipment);
  - **EN 746-2:97** (Industrial thermoprocessing equipment);
  - **EN 230:05** (European standard for automatic oil burner flame monitoring systems).

GENERAL FEATURES

The main features of this range are the following:

- flame monitoring through the rectification property of the flame (ionization) or through UV phototubes type UV1 (for technical characteristics see relevant data sheets);
- two independent safety contacts for gas valve control;
- electrical service life at max. declared load >250.000 operations;
- inbuilt and/or remote manual reset with LCD indication of the causes leading to safety shutdown;
- possibility to manage the valve proving system during the pre-purge or post-purge phase;
- easy installation and wiring;
- possibility to have multiple ignition attempts depending on the final application;
- operating cycles compatible with controller type LFL1 (Siemens). When replacing the control, the socket should also be changed.

ПРОМЭЛЕКТРОНИКА / sales@prom-elec.com

TECHNICAL DATA

Power supply:	230V (+10%/-15%) - 50/60Hz
upon request:	110/120V (+10%/-15%) - 50/60Hz
Operating temperature range:	-20°C + 60°C
Ambient humidity:	95% max
Protection degree:	IP40
Classification codes:	
according to EN 298:03	FBLLXN
according to EN 230:05	FTLLXN "WLE"
With option "V" according to EN 230:05	FTCLXN "WLE"
With option "V" according to EN 298:03	FBCLXN

Times:

– delay for M2 starting (**t7**):	0...60 s
– delay for air damper max. opening (**t16**)	0…60 s
– pre-purge time (**t1**):	0...120 s
– delay for APS check (**t10**):	10...120 s
– safety time (**t2**):	0...3 s
– safety time (**t2'**):	0...5 s
– pre-ignition time (**t3**):	0...30 s
– pre-ignition time (**t3'**):	0...12 s
– second safety time (**t9**):	0...10 s
– delay for second valve activation (**t4**):	0...120 s
– delay for second valve activation (**t4'**):	0...120 s
– delay for LR modulation (**t5**):	0...120 s
– post-purge time (with M2) (**t6**):	0...1800 s
– emptying time (**tsv**)	≤ 3 s
– checking time (**test1**)	22 s
– filling time (**trp**)	≤ 3 s
– checking time (**test2**)	27 s
– inter-purge time	0…300 s
– multiple ignition attempts	1…4
– response time in case of flame failure:	< 1 s
Power consumption, at start-up	7,5 VA
Power consumption, running:	9 VA

Contact rating:	Imax
Power supply:	max 5A cosφ >0,4
Motor 1:	3A cosφ > 0,4
Motor 2:	3A cosφ > 0,4
EVP:	0,5A cosφ > 0,4
First valve:	0,5A cosφ > 0,4
Second valve:	0.5A cosφ > 0,4
Alarm:	max 4A cosφ =1
Ignition transformer:	3A cosφ > 0.4
Internal fuse rating:	6,3A delayed
External fuse rating:	≤ 6,3A fast blow

REMARK: During the operation the total load rating shall never exceed the power supply.

– min. valve operation voltage: 130 ÷ 175 Vac

Flame monitoring:

The flame detection device can either exploit the rectification property of the flame (ionization) or be fitted with a UV1 phototube (see relevant data sheets for details); both devices are not safe to touch (no provision with any protection impedance).

Ionization by electrode

– Max. ionization current: 8,5μA*
– Min. ionization current: 0,5 μA*
  upon request: 1,2 μA
– Recommended ionization current:
  ≥ 3 times the min. ionization current
– Min. insulation resistance of detection electrode and cable to earth: ≥ 50 MΩ
– Max. stray capacitance of detection electrode: ≤ 1nF
– Max. short-circuit current: < 200 μA AC
– Voltage on pin 21 with opt. AR: 400Vac (+10%/-15%)
– Max. ionization current on pin 21 with opt. AR: 16μA*

* Measure carried-out by a DC microammeter with internal resistance ≤ 5 kΩ.

Ionization by UV phototube:

BRAHMA sensor type UV1 or UV2 (see relevant data sheets).

– Min. ionization current: 0,5 μA*
  upon request: 1,2 μA*
– UV test current during t1 (max): 14 μA
– Current in running condition (max): 11 μA
– Voltage on UV1 during testing 330Vac (+10%/-15%)
– Voltage on UV1 during operation 230Vac (+10%/-15%)
– Max. distance from UV source: 1 m
– Temperature range of UV sensor: -20 ÷ +60°C

* Measure carried-out by a DC microammeter with internal resistance ≤ 5 kΩ.

Remote emergency shutdown

In case the remote reset push-button is wired between pins 12 and 1, on pressing the push-button the control unit performs an emergency shutdown going to lockout.

Weight including socket: 950g

CONSTRUCTION

The use of a particular construction technique and the adoption of SMT technology have enabled to obtain an extremely flexible device which can control an air damper.

The enclosure made of plastic material protects the control from any damage resulting from crashes, incautious handling, dust and dirt.

A varistor protects the control from voltage transients in the mains supply. An inbuilt fuse protects the internal relays of the control in case of short circuit on the outputs (gas valves, motor, transformer and lockout signal). Since this is not an accessible fuse, the control should be protected with an external fuse of fast blow type suitable to the loads connected and never exceeding 6,3A.

OVERALL DIMENSIONS

Fig. 1 shows the overall dimensions of the control.

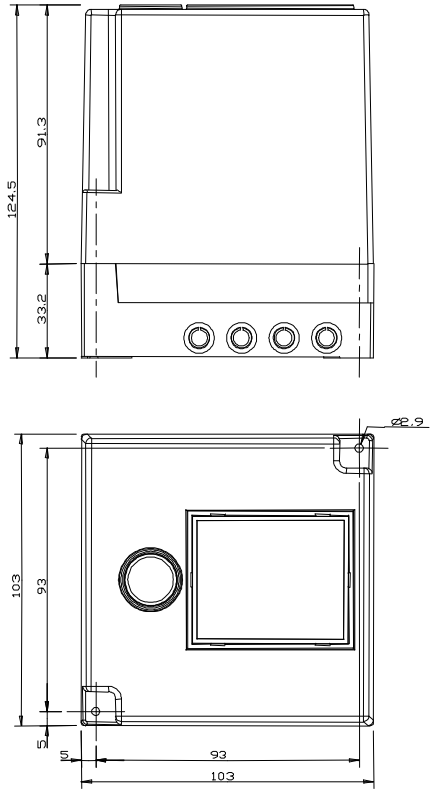

Fig.1

ACCESSORIES

The devices are fitted with inbuilt reset push-button and, upon request, with remote reset push-button (Fig.2).

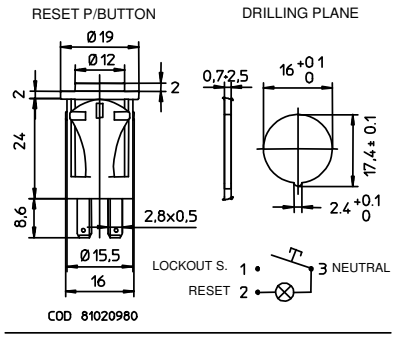

Fig.2

WIRING

The length of the cables of external components should not exceed 1m.

For the wiring of the controls, a suitable connecting socket of our production should be used. Fig.3 shows its main dimensions, useful for installation.

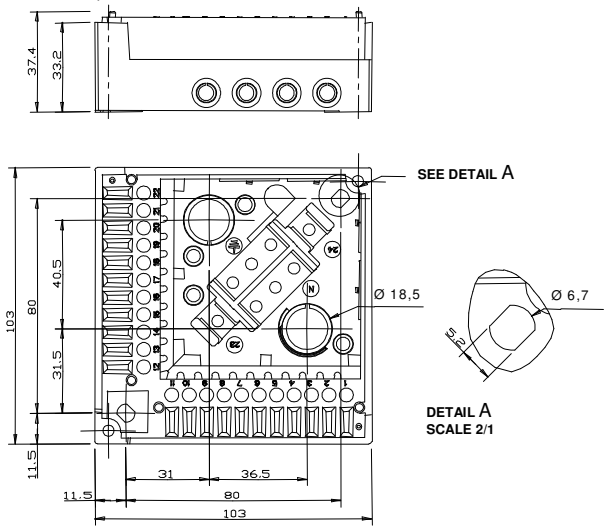

Fig.3

Regarding the connection of the control units, provisions such as strain relieves, sufficient **earth** terminals and **neutral** terminals should be available in the appliance or in external connection boxes.

DIRECTIONS FOR INSTALLATION

- A regulation shutdown should occur every 24 hours to enable the device to check its own efficiency (systems for non-permanent operation).
- Ignitor devices are safety systems and shall not be unduly opened; the manufacturer's responsibility and guarantee are invalidated in case of incautious handling.
- Connect and disconnect the control only after switching off the mains supply.
- The control can be mounted in any position.
- Avoid exposing the device to dripping water.
- Ventilation and a suitably low temperature ensure the longest life of the control.
- Make sure that the type (part number and times) you are using is correct before installing or replacing the control.
- With reference to the standard EN 1643 (European standard for valve proving systems), please be informed that this control unit manages the valve proving system (VPS function) but is not a VPS, as it does not incorporates any gas valves or gas pressure switch. The user should therefore complete the VPS by the installation of valves and pressure switches complying with reference standards (valves in class A in compliance with EN 161 and gas pressure switches in compliance with EN 1854); finally, the user shall guarantee that any leakage is lower than 60 cm^3/hr, except for those cases in which the product reference standard requires a lower limit.

ELECTRICAL INSTALLATION

- The applicable national and European standards regarding electrical safety, i.e. EN 60335-1:02 and EN 60335-2-102:02 (IEC 60335-2-102:04) should be respected.
- **Phase** and **neutral** should be connected correctly. The non-observance of live-neutral polarity may cause dangerous situations, as internal and external protection and safety devices might be ineffective in case the connection cables of thermostats and valves should lose their insulation. Besides, if **phase-neutral** polarity is not respected, the control proceeds to lockout at the end of the safety time.
- Before starting the system check the cables carefully; incorrect wiring can damage the control unit and compromise the safety of the installation.
- Make sure the **earth** terminal of the control box, the burner metal casing and the **earth** of the electrical system are well connected.
- Avoid placing the detection cable close to power or ignition cables.
- Use heat resistant detection probes and cables, well insulated to **earth** and protected from possible moisture or water in general.

In case of **phase-neutral** network with **neutral** not referred to **earth** the device can operate as well by means of an inbuilt resistor. In the event of bad insulation between **phase** and **earth**, the voltage on the ionization probe may be reduced until it causes the lockout of the control. In case of this kind of network, it is advisable to use a control fitted with option AR.

CHECKING AT START-UP

Always check the control before the first start, after any replacement or a long period of non-operation of the system. Before any ignition attempt make sure the combustion chamber is free from gas. Then check the following:

- if a starting attempt occurs without fuel supply, the device should proceed to lockout at the end of the first safety time t2;
- if the ignition attempt occurs with insufficient air flow, the control should go to lockout at the end of the t10 time;
- when stopping the gas flow while the control is running, power supply to the gas valves should be interrupted within 1s and the device should go to lockout;
- operating times and sequence should correspond to the behaviour declared for each type of control unit;
- the level of the flame signal should be high enough (see Fig.4 for the measuring test);
- any limiters or protection devices switching on should cause the safety shutdown of the device according to the final appliance.

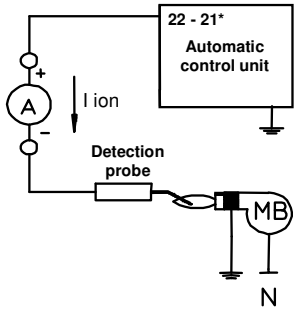

* Only in case of option AR.

Fig.4

OPERATION MODE

On closing of thermostats R, W and GP, the device gives the starting command to the first burner motor (M1) and, at the end of the delay time (**t7**), also to the second burner motor (M2). At the end of the **t16** delay, the air damper is given the command for opening to max. air flow; as soon as the air damper is completely open, the control checks the APS air pressure switc, and if the APS does not switch within the **t10** time, the control will perform lockout. Otherwise, the cycle will proceed with the pre-purge time (**t1**).

At the end of the pre-purge stage, the air damper is given the command for closing to min. air flow, and the pre-ignition phase **t3** (**t3'**) starts, in which the ignition transformer is activated. If in this stage the control box detects a flame signal in the burner (due, for example, to leakage from the fuel valves), it will perform lockout within 1s. If the pre-ignition stage is successfully accomplished, the safety time **t2** (**t2'**) will start, in which the control box energizes the gas valve and keeps the ignition transformer working. At the end of the safety time, the control checks the flame signal; if no flame signal is detected, the control unit will go to lockout. The second valve is energized with a **t4** delay in comparison to the first valve, provided that a sufficient flame signal is detected. The starting sequence ends on elapsing of the **t5** delay**,** when the air damper starts modulating between min. and max. air flow through the **LR** external control.

At start-up, the air damper is checked to prove its closed position (**z**); as soon as the M1 motor is energized, the control ensures that the air damper is in totally open position (**a**) to enable the best cleaning of the combustion chamber; before the beginning of the pre-ignition time, the control provides the closing command to min. air flow (**m**); this condition persists until the end of the ignition sequence, then the control unit gives the modulation command to the **LR** external device.

The attached operation diagrams are useful to better understand the working cycle of the devices.

VALVE PROVING SYSTEM

If the control unit is prearranged with inbuilt valve proving system, on any restoration of power supply and on any reset from lockout condition, the control unit performs the sequence enabling to check any valve leakage. This check is then carried out on any burner shutdown.

The test is based on the two-stage pressure proving principle: first, the valve on the mains supply side (**B**) is tested by evacuating the test space (*tsv*) and measuring the atmospheric pressure inside it (*test1*). Then, the valve on the burned side (**A1**) is tested by pressurizing the test space (*trp*) and ensuring that leakage is not too high (*test2*). If one of these tests is not successful, the control will go to lockout showing which of the two valves has got a leakage.

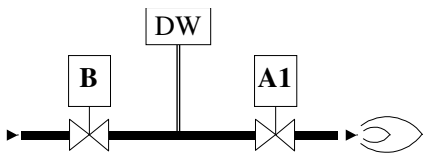

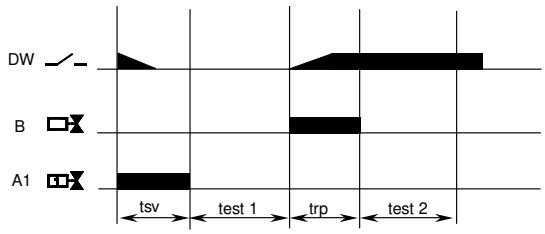

ANOMALIES

– Valve proving system:

During the test sequence, any leakage from the gas valves leads to lockout, with signalling of the faulty valve.

– Air flow failure (standard behaviour):

Any failure of the air pressure switch (**APS**) within **t10** causes lockout for air flow failure. This condition also occurs if the air pressure switch goes back to no-air-flow position during the running stage.

– Air pressure switch is stuck at start-up:

If the air pressure switch is stuck at start-up, the control will wait for the restoration of the APS contact.

– Flame simulation or extraneous light (standard behaviour):

Flame simulation or extraneous light during the pre-purge or pre-ignition time leads the control to lockout. In case of failure in the flame signal amplifier simulating the presence of flame, at start-up the device waits for the restoration of normal operation conditions.

– Flame/light signal failure in running condition (standard behaviour):

The control performs a lockout and de-energizes the fuel valves within 1 second.

RESETTING THE CONTROL

When the control performs lockout, press the inbuilt or remote reset push-button and keep it pressed until the lockout signal disappears (one second approx.).

NOTES FOR THE DISPOSAL OPERATION

The controller contains electronic components and it must not be disposed of as a domestic waste. For the disposal operation refer to the local rules concerning special waste.

DISPLAY INDICATIONS

An LCD provides indications about the operation status of the control box and any anomalies which may occur. Please find here below a short key to display symbols and message meanings:

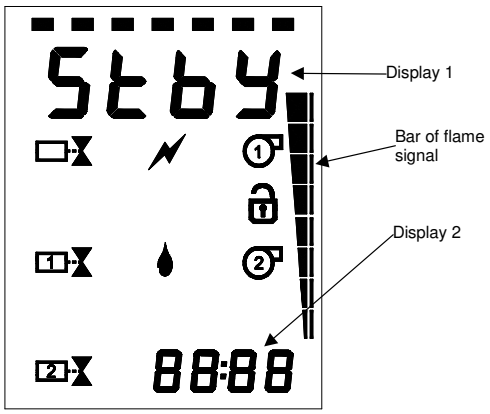

Symbol	Description
	Safety valve / pilot valve
	Valve 1
	Valve 2
	Ignitor
	Motor 1
	Motor 2
	VPS function is not factory prearranged
	Flame signal detection
Display1	System status
Display2	Second counter / type of anomaly

Meaning of error messages (display 2).

Anomaly	Description
Err0	Lockout for internal fault
Err 1	Lockout for air flow failure at start-up
Err2	Lockout for air flow failure in running condition
Err3	Lockout for flame detection failure at the end of the first safety time
Err4	Lockout for flame simulation / extraneous light during the pre-purge time
Err5	Lockout for flame signal loss in running condition
Err6	Emergency shutdown of the control box
Err7	Loss of the filling valve
Err8	Loss of the emptying valve

Here below you will find the messages appearing during normal operation with their meaning (display 1).

STATUS	Description
StbY	Control box waiting for thermostat closing
Mot 1	Motor 1 activated
Mot2	Motor 2 activated
A irM	Air damper open to max.
A irn	Air damper open to min.
AcOn	Ignitor activated
E 1on	Valve 1 activated
E2on	Valve 2 activated
Modu	Air damper modulation
bLoc	Safety shutdown
tESt	Valve proving system test

The above messages are indicative and can be modified upon request according to the application.

PART REFERENCES AND AVAILABLE OPTIONS

Type Options

MPI (1) (2) (3) (4) (5) (6) (7) (8) (9) (10) (11) (12) (13) (14) (15)

Type description

(1) Type of burner:

1: direct ignition;
2: intermittent first stage (standard version);

(2) Pilot valve:

1: No pilot valve;
2: Intermittent pilot valve (standard version);
3: Interrupted pilot valve (without valve proving system only);

Options description

(3) Ignition mode:

no letter: the ignition device operates for the whole safety time. Standard mode;
B: the ignition device is switched off as soon as the control unit detects a flame signal;

(4) 2nd valve (A2) opening with flame signal:

no letter: delay t4=12s. Standard mode;
X: the second valve is operated at the end of the safety time t2 (t2=t4);
Wnn: with delay t4 (nn time in seconds. See paragraph TECHNICAL DATA);

(5) Lockout due to extraneous light:

no letter: lockout without delay. Standard mode;
K: the system remains in continuous prepurge;

(6) No or insufficient air flow at start-up:

no letter: lockout with delay t10. Standard mode;
Q: the system remains in continuous prepurge;
Qnn: the system performs a lockout with delay t10 (nn time in seconds. See paragraph TECHNICAL DATA);

(7) Flame failure in running condition:

no letter: lockout without delay. Standard mode;
V: the control unit repeats the ignition sequence;

(8) Post-purge:

no letter: no post-purge setting. Standard mode;
Pnn: the post-purge time can be set upon request (nn time in seconds. See paragraph TECHNICAL DATA);
PTnn The post-purge time can be set upon request (nn time in seconds. See paragraph TECHNICAL DATA). The post-purge time ends on the next heat demand.

(9) Ignition attempts:

no letter: one ignition attempt with lockout at the end of the time t2 (safety time). Standard mode;
Yn: **n**= number of repetitions of the ignition sequence allowed (2…4).

(10) Inter-purge time:

no letter: no inter-purge time. Standard mode;
Inn: **nn**= the inter-purge time can be set upon request (nn time in seconds. See paragraph TECHNICAL DATA)

(11) Pre-ignition:

No letter: With pre-ignition of 6 seconds. This is the standard mode
Jnn: **nn**= the pre-ignition time can be set upon request (nn time in seconds. See paragraph TECHNICAL DATA)

(12) Air pressure switch failure in running status:

No letter: Lockout without delay. This is the standard mode.
R: Repetition of the start-up sequence.

(13) Configuration of pin 21:

No letter: Flame monitoring through UV phototubes type UV1. This is the standard mode.
AR: Flame monitoring through electrode with an higher voltage than pin 22.

(14) Checking of gas valve position contact:

No letter: Without checking of gas valve position contact. This is the standard mode.
C: With checking of gas valve position contact.

(15) Valve proving system

No letter: Without valve proving system.
VPS: With valve proving system.

WIRING DIAGRAM <u>WITH</u> VALVE PROVING SYSTEM

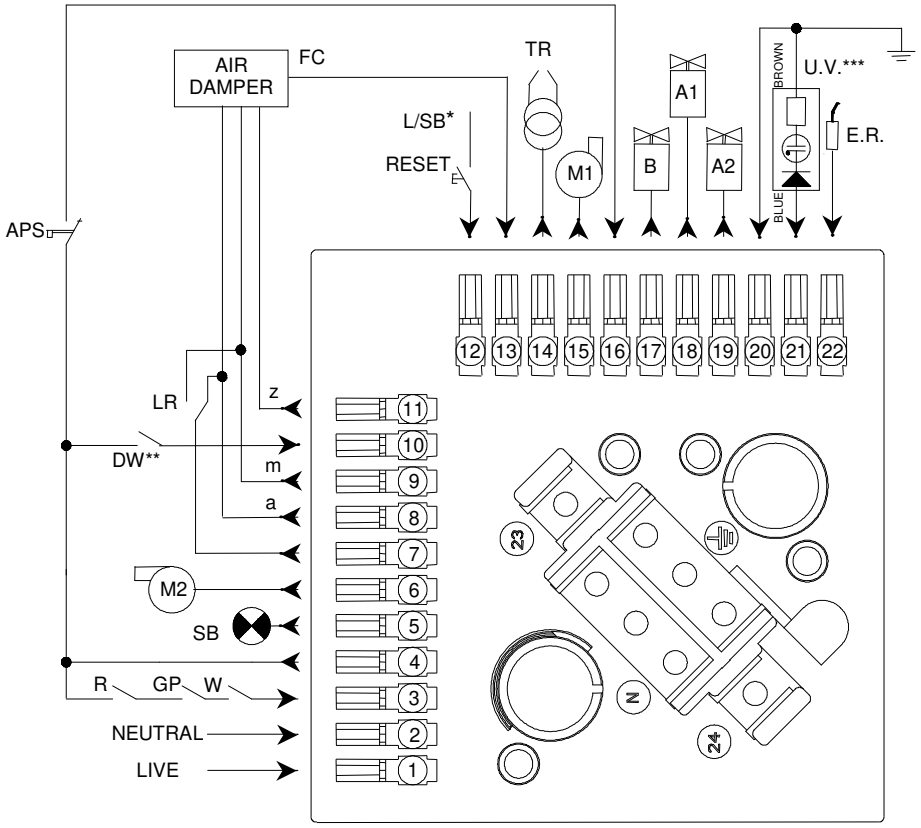

* If the RESET is wired between pins 12 and 1 (LIVE), both the remote reset function with device in lockout and the remote emergency shutdown function with device in running condition are available. If the RESET is wired between pins 12 and 5 (SB), only the remote manual reset function with device in lockout is available.
** If gas valve position checking contact (option 14) is present, it must be connected in series with proving system pressure switch.
*** Only for standard version. In case of option AR, pin 21 is designed for an electrode with an higher voltage than E.R.

HYDRAULIC DIAGRAMS <u>WITHOUT</u> CONNECTION PIPES IN ATMOSPHERE

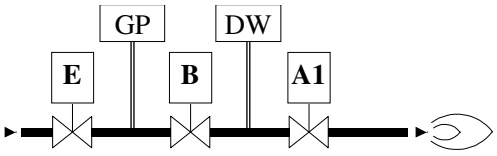

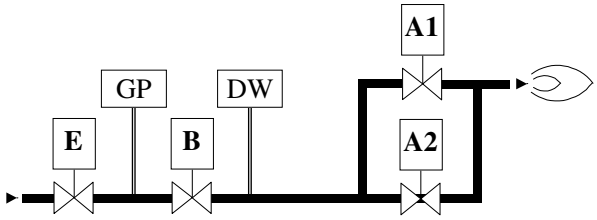

Key to symbols:

A1, A2	first and second gas valve
B	test circuit filing valve
E	safety shut-off valve (optional)
R	adjustment thermostat
W	safety or limit thermostat
GP	safety gas pressure switch
APS	safety air pressure switch
DW	proving system pressure switch
bv	gas valve position checking contact
M1, M2	motor 1 and motor 2
SB	lockout signal
RESET	remote reset from lockout
TR	Ignition transformer
U.V.	UV phototube
E.R.	detection electrode
z	air damper closed
m	air damper at min. air flow
a	air damper at max. air flow
LR	air damper in modulation status
FC	limit switch

WIRING DIAGRAM WITHOUT VALVE PROVING SYSTEM

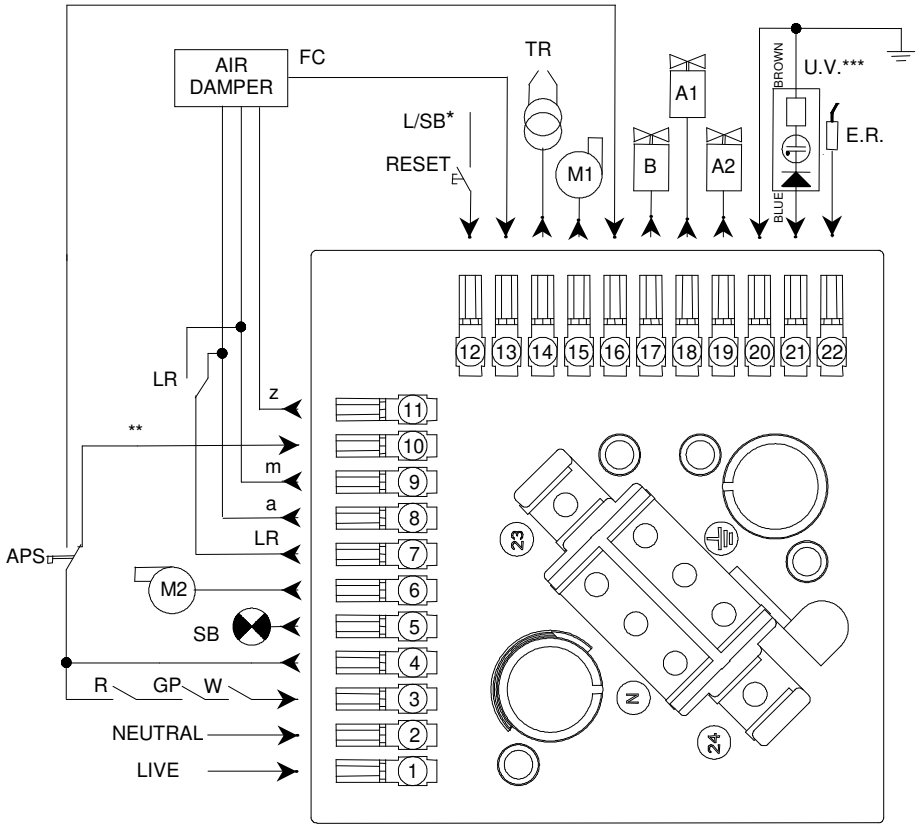

* If the RESET is wired between pins 12 and 1 (LIVE), both the remote reset function with device in lockout and the remote emergency shutdown function with device in running condition are available. If the RESET is wired between pins 12 and 5 (SB), only the remote manual reset function with device in lockout is available.
** If gas valve position checking contact (option 14) is present, it must be connected in series with pin 10.
*** Only for standard version. In case of option AR, pin 21 is designed for an electrode with an higher voltage than E.R.

HYDRAULIC DIAGRAMS

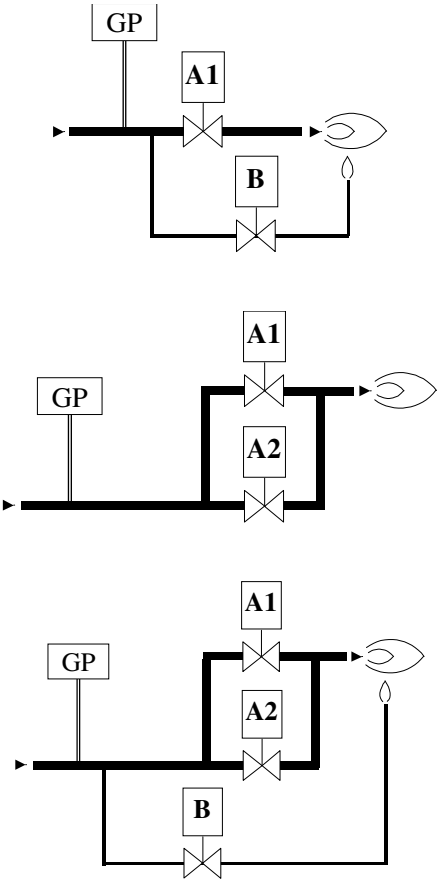

Key to symbols:

A1, A2	first and second gas valve
B	pilot valve
R	adjustment thermostat
W	safety or limit thermostat
GP	safety gas pressure switch
APS	safety air pressure switch
bv	gas valve position checking contact
M1, M2	motor 1 and motor 2
SB	lockout signal
RESET	remote reset from lockout
TR	ignition transformer
U.V.	UV phototube
E.R.	detection electrode
z	air damper closed
m	air damper at min. air flow
a	air damper at max. air flow
LR	air damper in modulation status
FC	limit switch

OPERATING CYCLE

VERSION WITH VALVE PROVING SYSTEM DURING POST-PURGE

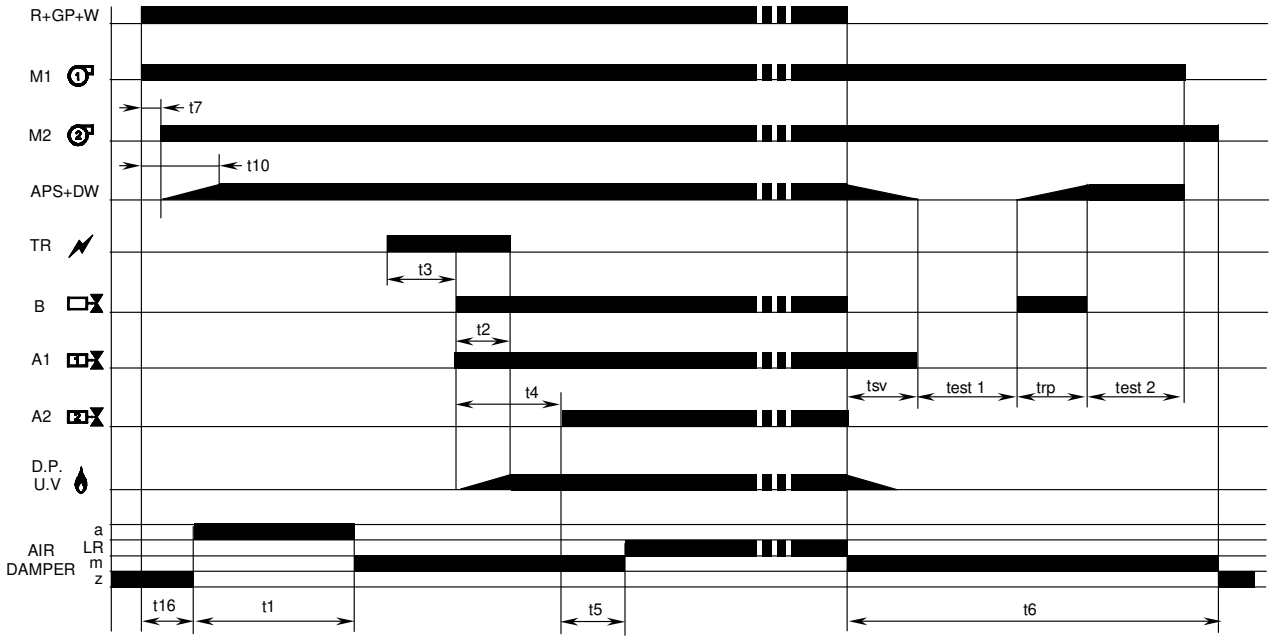

Legend:

t7	motor 2 delay
t16	air damper max. opening delay
t1	pre-purge time with air damper open
t10	air pressure switch check initial delay
t2	safety time
t3	pre-ignition time
t4	second valve activation delay
t5	air damper modulation delay
t6	post-purge time
tsv	control circuit in atmosphere
test 1	check with atmospheric pressure
trp	control circuit under pressure
test 2	check with gas pressure

VERSION <u>WITHOUT</u> VALVE PROVING SYSTEM

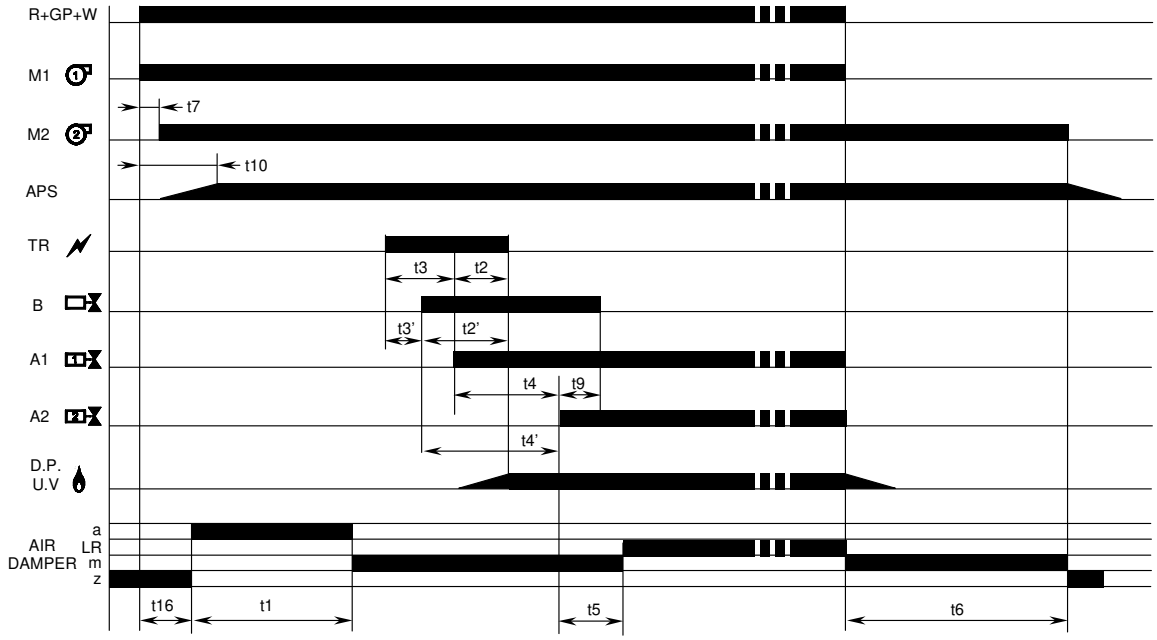

Legend:

t7	motor 2 delay
t16	air damper max. opening delay
t1	pre-purge time with air damper open
t10	air pressure switch check initial delay
t2 (t2')	safety time
t3 (t3')	pre-ignition time
t4 (t4')	second valve activation delay
- (t9)	second safety time
t5	air damper modulation delay
t6	post-purge time

WIRING DIAGRAM <u>WITH</u> VALVE PROVING SYSTEM <u>WITHOUT AIR PRESSURE SWITCH</u>

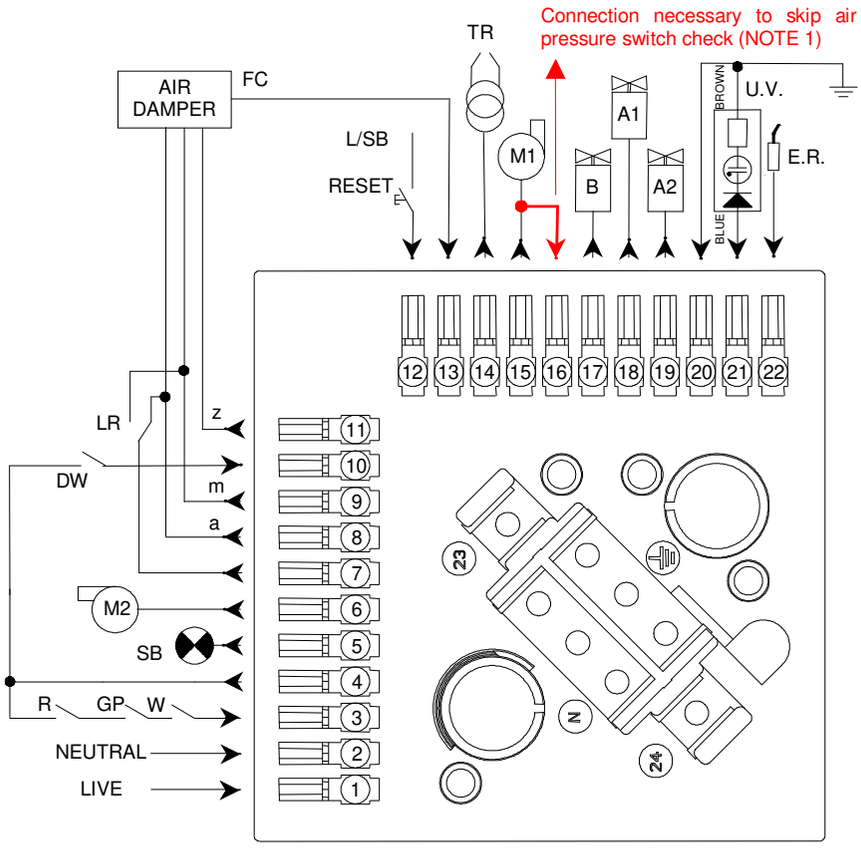

WIRING DIAGRAM <u>WITHOUT</u> VALVE PROVING SYSTEM <u>WITHOUT AIR PRESSURE SWITCH</u>

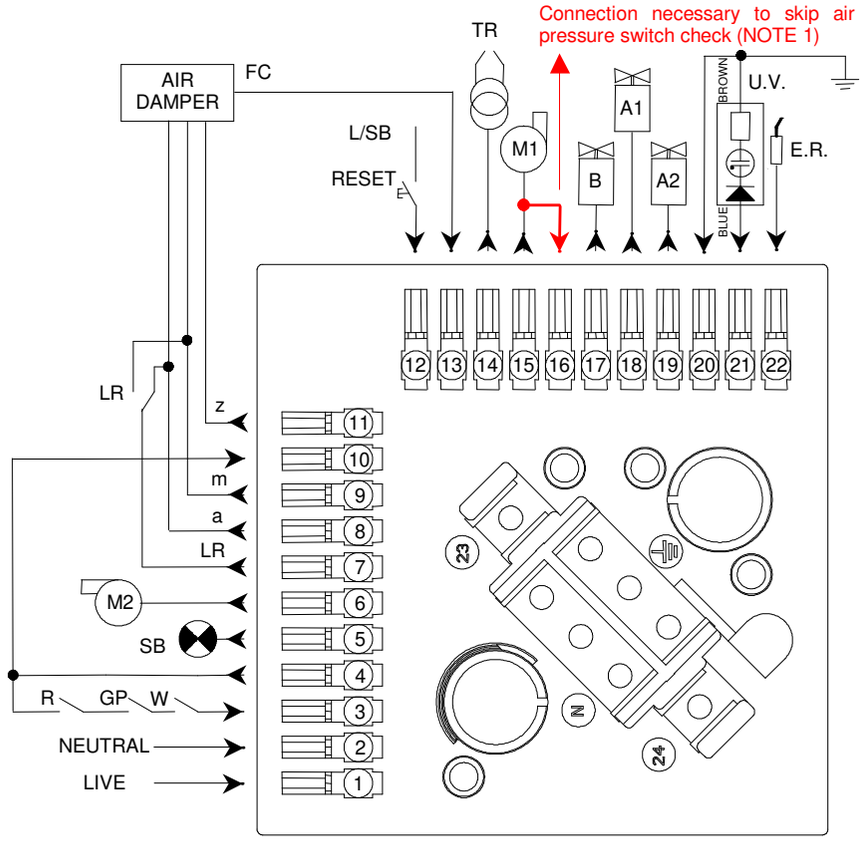

<u>NOTE 1</u> – This configuration is intended for special applications in which a check of the air flow is not required by the appliance standard.

ПРОМЭЛЕКТРОНИКА / sales@prom-elec.com

WIRING DIAGRAM WITH VALVE PROVING SYSTEM WITHOUT AIR DAMPER

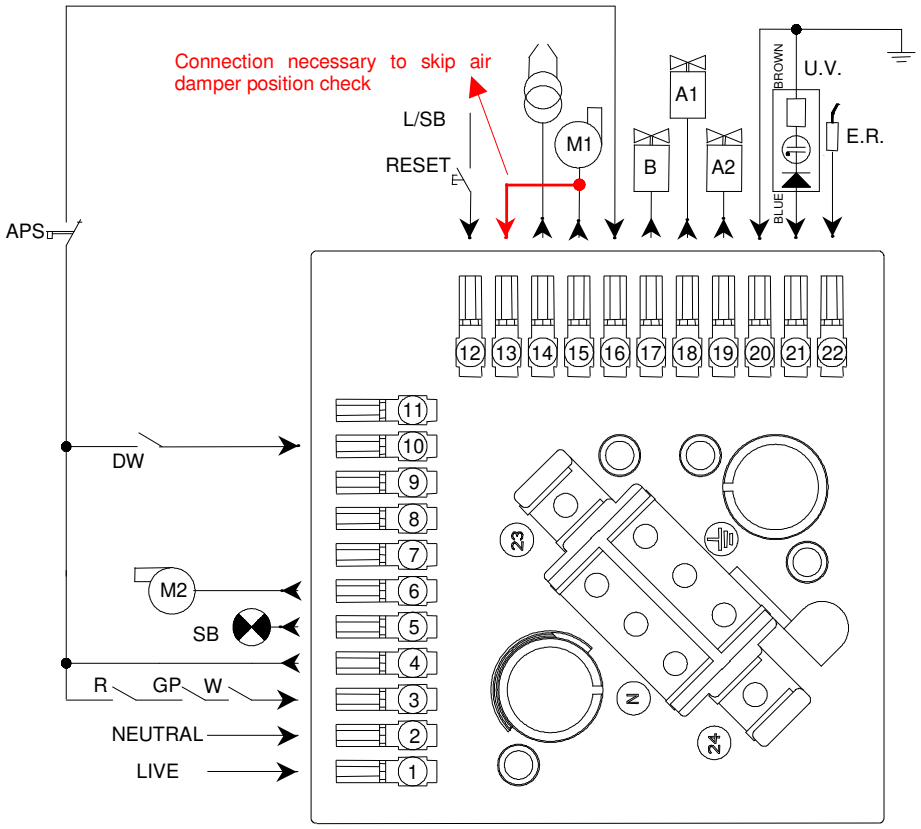

WIRING DIAGRAM WITHOUT VALVE PROVING SYSTEM WITHOUT AIR DAMPER

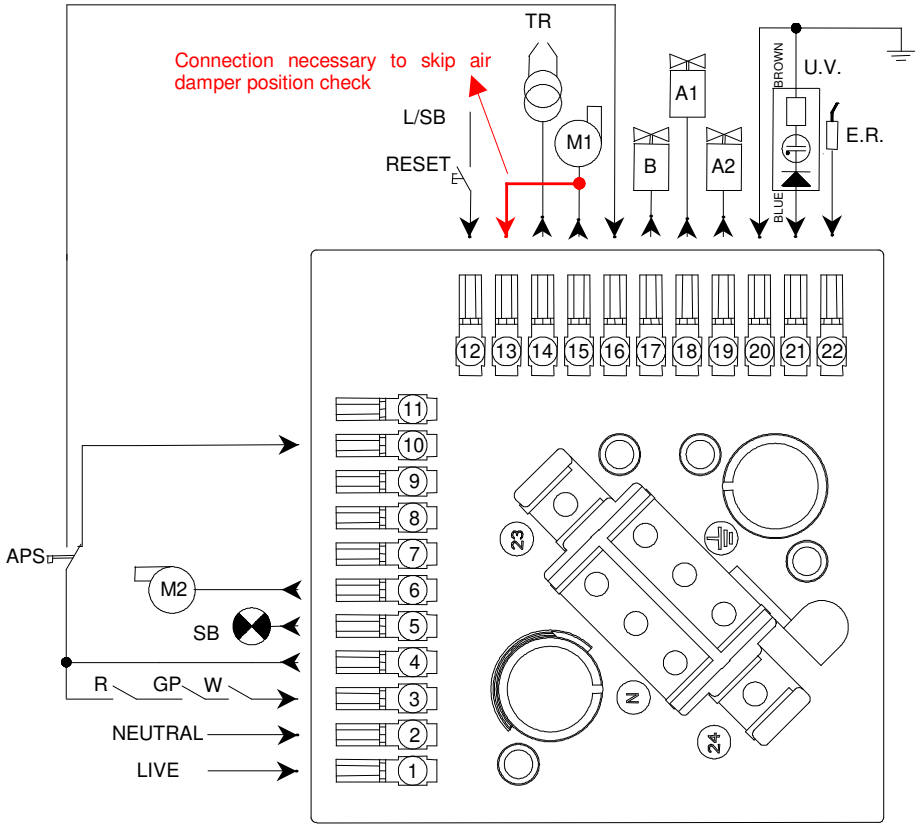

WIRING DIAGRAM <u>WITH</u> VALVE PROVING SYSTEM and OPT. 13 (AR)

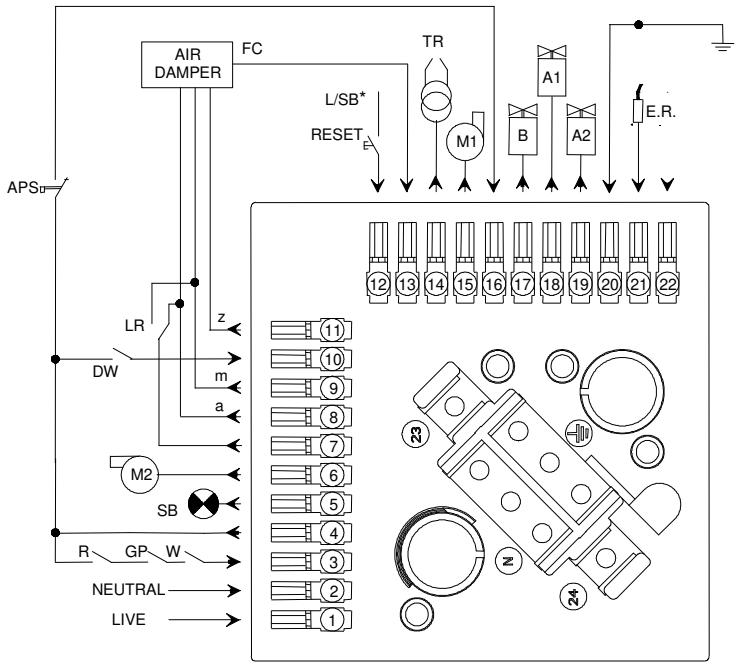

* If the RESET is wired between pins 12 and 1 (LIVE), both the remote reset function with device in lockout and the remote emergency shutdown function with device in running condition are available. If the RESET is wired between pins 12 and 5 (SB), only the remote manual reset function with device in lockout is available.

WIRING DIAGRAM <u>WITHOUT</u> VALVE PROVING SYSTEM and OPT. 13 (AR)

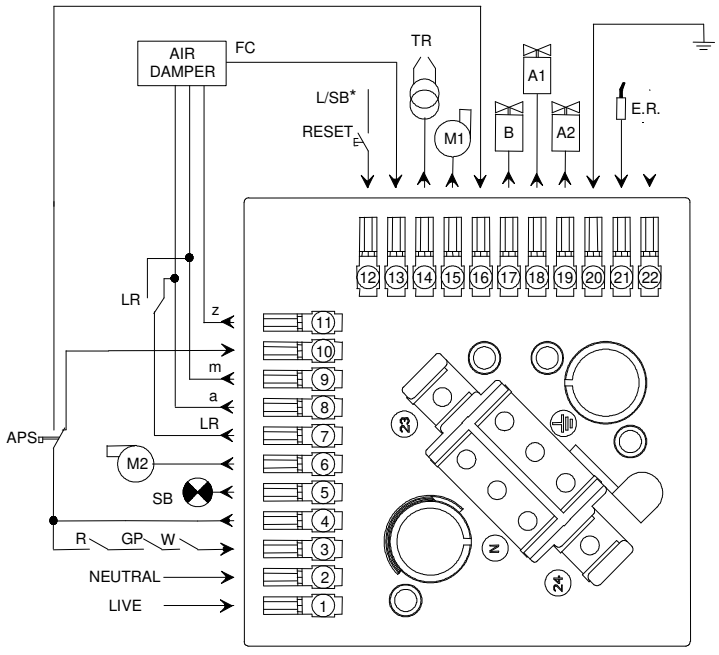

* If the RESET is wired between pins 12 and 1 (LIVE), both the remote reset function with device in lockout and the remote emergency shutdown function with device in running condition are available. If the RESET is wired between pins 12 and 5 (SB), only the remote manual reset function with device in lockout is available.

ATTENTION -> Company Brahma S.p.A. declines any responsibility for any damage resulting from the Customer's interfering with the device

BRAHMA S.p.A.
Via del Pontiere, 31/32
37045 Legnago (VR) – ITALY
Tel. +39 0442 635211 – Fax +39 0442 25683
http://www.brahma.it
E-mail: info@brahma.it

2020 March 03 subject to amendments without notice