Manual

BT300 BurnerTronic



LAMTEC

Sensors and Systems for Combustion Engineering

АНКАС

ПРОМЭЛЕКТРОНИКА / sales@prom-elec.com

Table of Contents

1 Important Information about the Manual 6
1.1 Validity of these Instructions. 6
1.2 Standards, Directives and Approvals 6

2 General Safety Instructions 8
2.1 Classification of the Safety Instructions and Warnings 8
2.2 Product-specific Dangers 9
2.2.1 Commissioning Notes 10
2.2.1.1 Fuel/Air Ratio Control 10
2.2.1.2 Basic Device 11
2.2.2 Tasks fulfilled by "authority on the subject" during Approval Test 11
2.2.2.1 Checking for Correct Parameter Setting in System 11
2.2.2.2 Checking the Fuel/Air Ratio Control System 12
2.2.2.3 Checking Burner Sequencer Part 12
2.3 Security Advice - Mounting 12
2.4 Installation Notes 13
2.5 Electrical Connection Flame Sensor 13

3 Product Description 15
3.1 Functional Description 15
3.2 Life Cycle 16
3.3 Technical Data 16
3.3.1 BT300 16
3.3.2 Actuator 20
3.3.2.1 Actuators 662R550... 20
3.3.2.2 Actuators 662R5001... / 662R5003... 22
3.3.3 Flame Sensor/Flame Scanner 26

4 Mounting and Functions 28
4.1 System Overview 28
4.2 Connecting Diagrams 29
4.2.1 Optional Connections for the Fuel Line 30
4.2.2 Optional Connections for the Flame Scanner 31
4.2.3 LSB Module Integration 34
4.3 Flame Monitoring 36
4.3.1 Integral Flame Monitoring (Option) 36
4.3.2 Flame Sensors. 37
4.3.2.1 KLC 20/KLC 2002 37
4.3.2.2 KLC 10/KLC 1000 39
4.4 Process Sequence Charts 41
4.5 Leakage Test for Main Gas Valves. 46
4.5.1 Calculation Example 46
4.5.2 Leakage Test Process Flow 49
4.5.3 Reaction on Gas Deficiency 51
4.5.4 Valve Leakage Test Venting Over the Roof 51
4.6 Staged Operation 52
4.7 Flue Gas Recirculation. 54
4.8 Actuator 55
4.8.1 Operation after Power ON/Long RESET 55

Table of Contents

4.8.2 Direction of Rotation/Position Damper Closed 55
4.8.3 Detection of Actuators with Transposed Connections 56
4.8.4 Adjusting of Actuators 56

5 Operating Control and Displays 58
5.1 User Interface UI300 58
5.1.1 UI300 User Interface 58
5.1.2 Menu Functions 58
5.1.3 Main Menu 60
5.1.4 Information Menu Path 60
5.1.4.1 Burner Details 61
5.1.4.2 Recalling Fault History 62
5.1.4.3 Software Version 63
5.1.4.4 Display of Check Sums 63
5.1.4.5 Serial Number 64
5.1.4.6 Positions of Actuators 64
5.1.4.7 Check Digital Inputs/Outputs 65
5.1.5 Manual Menu Path 66
5.1.6 Fault Indication 67
5.1.7 Settings Menu Path 68
5.1.7.1 Password 69
5.1.7.2 Program Sequence 69
5.1.7.3 Configuration of the Actuators 75
5.1.7.4 Set Curve 75
5.1.7.5 Deleting Curves 76
5.1.7.6 Adjusting Controller 76
5.1.7.7 UI300 Settings 78
5.1.7.8 Edit Parameter 78
5.1.8 Menu Path Dataset Processing 79
5.2 Other Displays 80
5.3 LSB Remote Software 82
5.3.1 Functional Description, Connecting USB-CAN Module 82
5.3.1.1 Installation Prerequisites 82
5.3.1.2 Install Software 83
5.3.1.3 Install Software 83
5.3.1.4 First Connection with the End Device 96
5.3.1.5 Release Codes/Release Levels 98
5.3.2 Offline/Online 99
5.3.2.1 Offline Mode 99
5.3.2.2 Online Mode 100
5.3.2.3 Connecting the BT 300 with the PC 100
5.3.3 Read Out Faults 108
5.3.4 BT300 Curve Dialogue 111
5.3.4.1 Setpoint Graphic 112
5.3.4.2 Curve Table 112
5.3.4.3 Set Curve 113
5.3.5 Programming of Fuel/Air Ratio Control 115
5.3.6 Programming a Staged Operation 121
5.3.7 Software Interface LSB Remote Software 125
5.3.7.1 File 125

Table of Contents

5.3.7.2 Access Rights 130
5.3.7.3 BurnerTronic 131
5.3.7.4 Options 134
5.3.7.5 Help 137

6 Maintenance 139
6.1 BT300 Data Back-Up 139
6.2 Firmware Update BT300 140
6.3 Firmware Update UI300 143
6.4 Replacing of BurnerTronic 144

7 Options 145
7.1 Firing-Rate Controller Module LCM100 145
7.1.1 Range Limits 146
7.1.2 Enter Setpoint of Firing Rate Controller 147
7.1.3 Operating Description 148
7.1.4 Control by atmospheric conditions and external setpoint presetting 148
7.1.5 Setpoint Changeover 149
7.1.6 Start-up Sequence 150
7.1.7 Thermostat and Control Range 150
7.1.8 Control Range 151
7.1.9 Checking the Safety Limiter 151
7.1.10 Control Mode 151
7.1.11 Aides for Setting 152
7.1.12 External/Manual Firing-rate Presetting (Terminals 16 - 19) 154
7.1.13 DIP Switch 154
7.1.14 LEDs 155
7.1.15 Electrical Connection 156
7.1.15.1 Galvanic Isolation 158
7.1.15.2 Terminal Assignment 159
7.1.16 Technical data LCM100 163
7.2 Dual Fuel Module DFM300 165
7.2.1 DIP Switch 166
7.2.2 LEDs 168
7.2.3 Electrical Connection 169
7.2.3.1 Galvanic Isolation 170
7.2.3.2 Terminal Assignment 171
7.2.4 Technical Data DFM300 173
7.2.5 Adapter System Rast5 174
7.2.5.1 Electrical Connection 174
7.2.5.2 Technical Data Rast5-Module 177
7.3 Variable Speed Drive Module VSM100 178
7.3.1 DIP Switch 179
7.3.2 LEDs 181
7.3.3 Electrical Connection 182
7.3.3.1 Galvanic Isolation 183
7.3.3.2 Terminal Assignment 183
7.3.4 Technical Data VSM100 185
7.4 Expansion Module for LSB - LEM100 186
7.4.1 DIP Switch 186

Table of Contents

7.4.2 LEDs 186
7.4.3 Electrical Connection 187
7.4.3.1 Galvanic Isolation 188
7.4.4 Technical Data LEM300 188
7.5 Field Bus Modules 189
7.5.1 Field Bus Module for PROFIBUS PBM100 189
7.5.1.1 DIP Switch 189
7.5.1.2 LEDs 190
7.5.1.3 Electrical Connection 190
7.5.1.4 PROFIBUS Communication 191
7.5.1.5 Technical Data PBM100 193
7.5.2 Field Bus Module for MODBUS TCP EBM100 194
7.5.2.1 IP Configuration 194
7.5.2.2 DIP Switch 194
7.5.2.3 LEDs 195
7.5.2.4 Electrical Connection 196
7.5.2.5 Ethernet Communication 197
7.5.2.6 Technical Data EBM100 199
7.5.3 Appendix 200

8 Disposal Notes 205

9 Declaration of Conformity 206

10 Appendix 209
10.1 Display Symbols 209
10.2 Indication Symbols 210

1 Important Information about the Manual

1.1 Validity of these Instructions

This manual is valid for the burner control system BurnerTronic BT300 in any configuration.

The information contained in this document refer to the software versions BT300 v3.5 and UI300 v3.8. If you use any other software version as mentioned previously some of the described functions may not be available or not all available functions work as described in this document.

1.2 Standards, Directives and Approvals

BT300 applies to the following standards and directives:

European Directives:

2004/108/EU	EMC Directive
2014/35/EU	Low Voltage Directive
2009/142/EU	Gas Appliance Directive
2014/68/EU	Pressure Equipment Directive, Conformity Assessment cat. IV mod. B and D
2011/65/EU	RoHS

Harmonised European Standards:

EN 298	
EN 13611	
EN 1643	Integrated valve leakage check, gas line DIN DVGW PÜZ N6-2510 ASO 324
EN 12067-2	
ISO 23552-1	
EN 50156-1, no. 10,5	

SIL 3	DIN EN 61508 part 1-7 (BT331, BT341)

USA and Canada:

MH48669	Controls, Primary Safety Certified for Canada - Component
UL 372	
UL 1998	

Australia:

AGA	AS 4625 - 2008
	EN 298 - 2012

South Africa:

SAGA	Act 85 of 1993
	PER R 734 -2009

Russia/Belarus/Kazakhstan:

EAC

2 General Safety Instructions

2.1 Classification of the Safety Instructions and Warnings

The following symbols are used in this document to draw the user's attention to important safety information. They are located at points where the information is required. It is essential that the safety information is observed and followed, and that applies particularly to the warnings.

DANGER!

This draws the user's attention to imminent danger. If it is not avoided, it will result in death or very serious injury. The plant including its surroundings could be damaged.

WARNING!

This draws the user's attention to the possibility of imminent danger. If it is not avoided, it may result in death or very serious injury. The plant including its surroundings could be damaged.

CAUTION!

This draws the user's attention to the possibility of imminent danger. If it is not avoided, it may result in minor injuries. The plant including its surroundings could be damaged.

NOTICE

This draws the user's attention to important additional information about the system or system components and offers further tips.

The safety information described above is incorporated into the instructions.

Thus, the operator is requested to:

1 Comply with the accident prevention regulations whenever work is being carried out.

2 Do everything possible within his control to prevent personal injury and damage to property.

2 General Safety Instructions

2.2 Product-specific Dangers

Please observe the safety instructions to avoid personal injury and damage to property and the environment!

The BT300 is a safety device! The device must not be opened, interfered with or modified. LAMTEC assumes no liability for damages arising as a result of unauthorised interference!

- After commissioning and after each maintenance action check the exhaust gas values across the entire power range.
- Qualified specialist staff are required to carry out all activities (assembly, installation, servicing, etc.).
- The burner or boiler manufacturer will ensure that the BT300 base unit is compliant with protection class IP40 or IP54 for outdoor use in accordance with DIN EN 60 529.
- Before working in the connection area, switch off the power supply to the plant from all poles. Ensure that it cannot be switched back on and that the plant is voltage-free. There is a risk of electric shock when the plant is not switched off.
- Place and secure the protection against contact on the BT300 and on all connected electrical parts. The cover must fulfil the design, stability and protection requirements of EN 60730.
- Plug connectors X30 - X34 have no protective separation from the mains voltage. To replace or disconnect the plug connectors, all poles of the plant must be disconnected from the mains.
- After each activity (e.g. assembly, installation, servicing, etc.) check wiring and parameters to make sure it is in good working condition.
- If the equipment is dropped or suffers impact, you should no longer commission it. The safety functions may also be impaired but fail to show any obvious external damage.
- When the ratio curves are being programmed, the adjuster will continually monitor the quality of the plant's combustion (e.g. using an exhaust gas analysis station). In the event that the combustion values are inadequate or the conditions are potentially harmful, the adjuster will take suitable action, e.g. switch off the system manually.
- These operating instructions describe many possible applications and functions and should be used as guidelines. Carry out functional tests on the test bench and/or in the plant application to ensure correct functioning and document the results.

Follow additional instructions to guarantee safety and reliability while operating the BT300:

- Condensation and humidity are to be avoided. If necessary, make sure that the installation is sufficiently dry before you switch it on.
- Avoid static charge having a destructive effect in case of touching the device's electronic components.

NOTICE

LAMTEC recommends that you use ESD equipment while working on electrics/electronics.

2.2.1 Commissioning Notes

- Check all safety functions during commissioning!
- There is no feature to prevent RASTx connector plugs being transposed. Therefore ensure the correct assignment of the plant's plugs prior to commissioning.
- Check electromagnetic emissions specific to the application.
- While installing and commissioning the plant, the person in charge of the plant/heating technician needs to document the following:
  - Parameter set values
  - Setting values (e.g. curve progressions)
  - Values describing the fuel/air ratio control.

  This data can be printed using LSB remote software or alternatively being kept as a handwritten note.

  Retain this documentation and have it checked by the 'authority on the subject'.

⚠ WARNING!

For BT300 parameter settings which deviate from the application standards can be carried out in access level 2. For this reason, check whether the parameter settings are consistent with the corresponding application standards (e.g. EN 298, EN 230, EN 676, EN 267, etc.) or the respective plant has to be approved separately.

⚠ WARNING!

While unlocking the safety interlock chain in the mode 'BURNER OFF' BT300 **does not** lock the system. BT300 prevents a burner start-up until safety interlock chains are locked.

▶ In case your application needs an interlock of the plant while unlocking the safety interlock chain also in 'BURNER OFF' mode you must take suitable measures at the plant.

NOTICE

Should the safety times be changed, these changes must be documented on the devices

▶ Bring an additional sticker for the device.

▶ Note the changed safety times on this sticker.

▶ The details on this sticker must be clear for reading and non-smudge.

2.2.1.1 Fuel/Air Ratio Control

- Guarantee proper operation by ensuring adequate excess air.
  In order to do this, set the values for fuel and combustion air in such a way that
  - combustion chamber pressure
  - fuel pressure
  - temperature and pressure of the combustion air

  can ensure proper operation through the entire range of burner firing rate until next periodic inspection.
- Pay attention to wear and tear of actuators and actuator elements.
- Measure characteristic values of combustion process to document proper operation.

2.2.1.2 Basic Device

Check the following items prior to commissioning:

- Valves must be assigned correctly to valve outputs on BT300.
- Correct setting of time parameters (especially safety and pre-purge times).
- Flame sensor functioning well in case of:
  - flame blow-off during operation (incl. flame-out response time)
  - parasitic light is present during pre-purge period
  - at a missing flame formation while end of safety period starts
- Activation of the valve leakage control function of gas valves and correct leakage measurement, when required by an application.

2.2.2 Tasks fulfilled by "authority on the subject" during Approval Test

By specifying the assigned DIN registration number and product ID number the manufacturer confirms that model BT300 burner control system is consistent with type-tested system.

The connection between actuators and actuator elements for fuel and combustion air and also to any additional actuator elements used must be form-fit.

2.2.2.1 Checking for Correct Parameter Setting in System

While installing and commissioning the plant the person in charge of the plant/heating technician needs to document the following:

- Parameter set values
- Setting values (e.g. curve progressions)
- Values describing fuel/air ratio control.

This data can be printed using LSB Remote Software or alternatively being kept as a handwritten note.

Retain this documentation and have it checked by the ’authority on the subject’.

NOTICE

For BT300 parameter settings which deviate from application standards can be carried out in access level 2. For this reason, check whether the parameter settings are consistent with the corresponding application standards (e.g. EN 676, EN 267, etc.) or the respective plant has to be approved separately.

2.2.2.2 Checking the Fuel/Air Ratio Control System

Save setting values (curve parameters) for actuator elements, fuel and combustion air through the complete range of burner firing rate in sufficient number.

Select setting values of fuel and combustion air considering combustion chamber pressure, fuel pressure, temperature and pressure of the combustion air in order to guarantee proper operation with adequate excess air through the entire range of burner firing rate.

The burner/boiler manufacturer has to document this by measuring reference values of the combustion process.

2.2.2.3 Checking Burner Sequencer Part

Check the following:

- Correct setting of time parameters (especially safety and pre-purge periods).
- Whether an ionisation flame sensor or a corresponding flame scanner is used since only these are capable of running in continuous operation.
- Functioning of flame sensor
  - in case of flame blow-off during operation
  - parasitic light being present during pre-purge period
  - missing flame formation at the end of the safety-period
- Check the performance of all available and/or essential incoming signals, such as:
  - Air pressure
  - Gas pressure - min./oil pressure - min.
  - Safety interlock chain (e.g. STB)
- Activated Leakage control function for gas valves if required for application purposes.
  - If necessary, ensure a correct leakage quantification.

2.3 Security Advice - Mounting

- Compliance with national safety regulations and standards is obligatory at all times.
- During the assembly and installation process, you must meet the standard requirements of DIN VDE 0100, 0550 and DIN VDE 0722
- To mount the BT300 basic unit, use screw fittings with an M4 thread (UNC32) and a maximum tightening torque of 1.8 Nm for fastening all four fixing points. Keep in mind that housings have improved mechanical stability when connected on surrounding contact surfaces.
  Generally connect to an even mounting surface.

NOTICE

Deterioration of the 0.8 Nm servomotor through opening.

Opening the servomotor in a different position other than the cap of the electrical connection, destroys the servomotor.
The warranty expires.

▶ Open the servomotor at the cap of the electrical connection only.

NOTICE

Damaging the servomotors with 1.2 Nm and 9.0 Nm through opening.

Opening the servomotor destroys the servomotor.
The warranty expires.

2.4 Installation Notes

- Lay high-voltage ignition cable always separately and in safe distance from device and other cables.
- Only trained, qualified personnel may open the BurnerTronic's cover.
- Observe local and national regulations when wiring the electric cables inside the burner.
- Tighten the screw terminals of the BT300 using a tightening torque of > 0.5 Nm.
- Supply the feed cable with L, N and PE only. The N neutral conductor must not have potential difference to the PE protective conductor.
- The pre-fuse for the BT300 should be max.10 A slow-blow.
- Phase, neutral and central point conductors must not be interchanged (this would lead to dangerous malfunctioning, loss of protection against contact, etc.).
- The strain relief for the connected cables must comply with standards (e.g. DIN EN 60730 and DIN EN 60335).
- Make sure that no spliced strands can come into contact with any of the adjacent connections. Use appropriate end sleeves.
- The burner manufacturer is obligated to supply unused connections on the BT300 with dummy plugs.
- To replace or disconnect the plug connectors, all poles of the plant must be disconnected from the mains.
- Make a form-fit connection between the actuators and actuating elements for fuel and combustion air, as well as a form-fit connection for any additional actuator element.
- Optional components with safety extra low voltage (SELV) must be safely separated from the mains. Otherwise this can cause an electrical shock or damage the device due to a short-circuit.
- You may connect only passive devices or devices without feedback effects at the 230V outputs of the BT300 (like relays without additional voltage connection). In case of error it must be guaranteed that BT300 is not fed with 230 V by this terminals.
- To avoid disruption of the UI300's display during ignition, a damping resistor of 1 ... 5 kΩ must be installed in the high-voltage ignition line.
- To avoid disturbance on the Bus, the termination must be active on the first and the last device connected to the bus must be terminated (see chapter *4.2.3 LSB Module Integration*).

2.5 Electrical Connection Flame Sensor

Interruptions and losses in signal transmission need to be minimised:

- Do not wire the sensor cable with other cables.
  Flame signal is reduced through line capacities. → Use a separate 7-pole cable.
- Consider the permitted length of sensor cables.
- The ionisation flame sensor supplied from the mains is not protected against contact. Protection against accidental contact is therefore obligatory.
- Ground the burner according to instructions – grounding the boiler itself is not sufficient!
- Position ignition electrode and ionisation flame sensor where spark cannot hit ionisation flame sensor (risk of electrical overloading).

3 Product Description

3.1 Functional Description

BT300 combines the benefits of an electronic fuel/air ratio control system with up to three motorised actuator elements and optional modules like an analogue output for speed control of the combustion air fan with an electronic burner control unit. The leakage test, flame monitoring system, power control unit and (optional) CO/O_2 controller for control and optimisation of an oil or gas-fired forced-draught burner are all integrated.

BT300 is suitable for virtually all combustion plants. Safety interlock chains, monitors (e.g. gas and air pressure) and sensors are wired directly to the BT300. This greatly reduces the cost of additional relays and wiring. The BT300 is designed to be attached to the burner. The short wiring paths also save money. As a result, BT300 is particularly suitable as standard equipment for monoblock burners.

The compact design of BT300 burner control system also has its advantages during commissioning. Standardisation of wiring and operator interface minimises sources of errors right from the start. Moreover, intelligent display information is making search for errors much easier.

The BT300 is available in five designs:

- BT320
  - 2 motorised control outputs
  - 1 continuous output 0 ... 10 V, 0/4 ... 20 mA for speed control of the combustion air fan using VSM100 (optional)
  - intermittent operation
- BT330
  - 3 motorised control outputs
  - 1 continuous output 0 ... 10 V, 0/4 ... 20 mA for speed control of the combustion air fan using VSM100 (optional)
  - Approved for continuous operation only in combination with flame sensors capable of running continuously
- BT331
  Same range of functions as BT330 but including following certificates:
  - DIN EN 61508:2002 parts 1-7 for SIL 3
  - Performance Level PLE according DIN EN ISO 13849-1
- BT340
  - 3 motorised control outputs
  - Oil-gas dual-fuel operation via DFM300
  - 1 continuous output 0 ... 10 V, 0/4 ... 20 mA for speed control of the combustion air fan using VSM100 (optional)
  - approved for continuous operation only in combination with flame sensors capable of running continuously
- BT341
  Same range of functions as BT340 but also including following certificates:
  - DIN EN 61508:2002 parts 1-7 for SIL 3
  - Performance Level PLE according DIN EN ISO 13849-1

Burner sequencer and fuel/air ratio control can be adjusted for a wide range of combustion conditions by setting parameters. The BT300 for oil and gas can be set to start with and without pilot burner. The integrated leakage test can be run before ignition or after shutting down the burner.

Starting without pre-purge using gas is available in accordance with EN676.

The setting of fuel/air ratio curves can be optimised using optional CO/O_2 control during operation. This helps to counteract conditions that interfere with combustion. This ensures a permanent burner operation at the greatest possible efficiency.

Operating and fault messages are displayed by symbols and numbers on UI300 User Interface. Plant-specific configurations and settings of fuel/air ratio control curves are operated via menu of UI300 User Interface.

3 Product Description

An operating and start-up counter is integrated.

The optional LCM100 power control unit with two setpoints, external setpoint shift (control by atmospheric condition) and start-up control is also available.

3.2 Life Cycle

BurnerTronic BT300 burner management system has a designed lifetime * of 250,000 burner start-up cycles, which, under normal operating conditions in heating mode, correspond to approx. 10 years of usage (starting from the production date given on the type plate).

This lifetime is based on the endurance tests specified in standard EN230/EN298 and the table containing the relevant test documentation as published by the European Association of

The designed lifetime is based on use of BT300 according to the manufacturer's basic documentation. After reaching designed lifetime in terms of number of burner start-up cycles, or the respective time of usage, the BT300 must be replaced by authorized personnel.

3.3 Technical Data

3.3.1 BT300

1 RAST5 plug connector optionally
A cutting and clamping technique (SKT) *
B screw terminals *

2 RAST2.5 plug connector for actuator, User interface and LAMTEC SYSTEM BUS in cutting and clamping technique

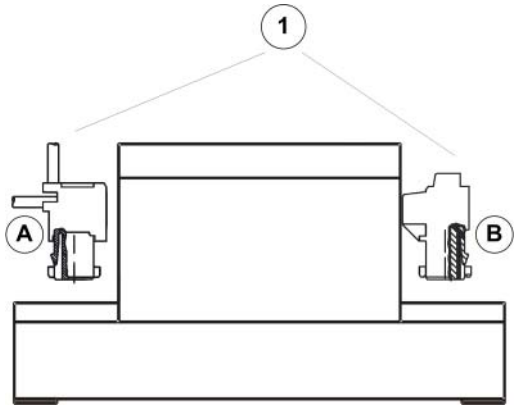

* please note plug-in direction

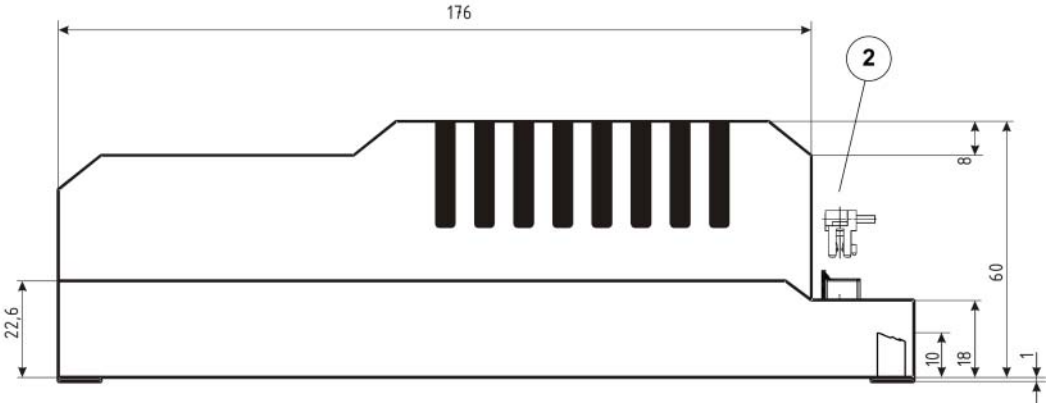

* The designed lifetime is not the warranty time specified in the Terms of Delivery

3 Product Description

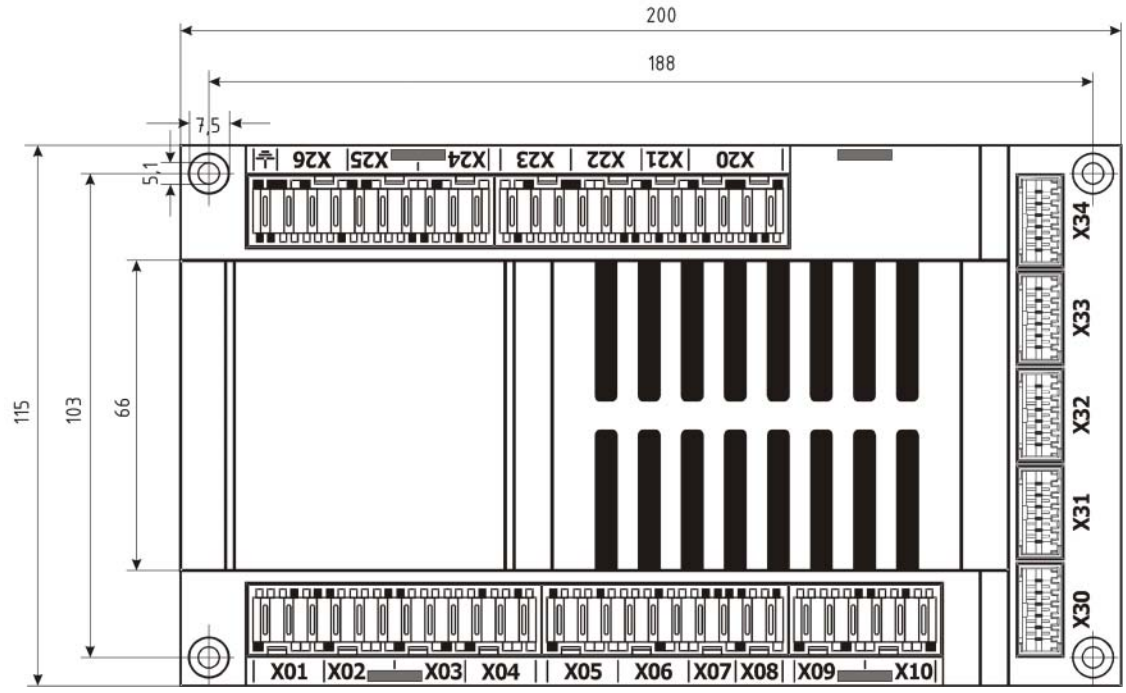

Fig. 3-1 Dimensions BT320 ... 340 (terminal assignment BT330/BT340 only)

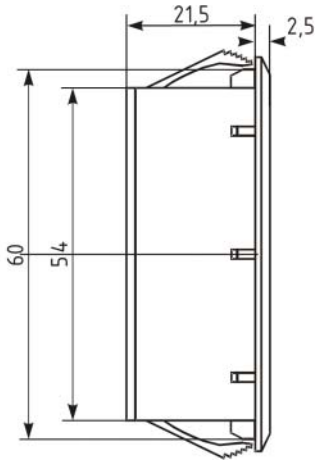

Fig. 3-2 UI300 side view

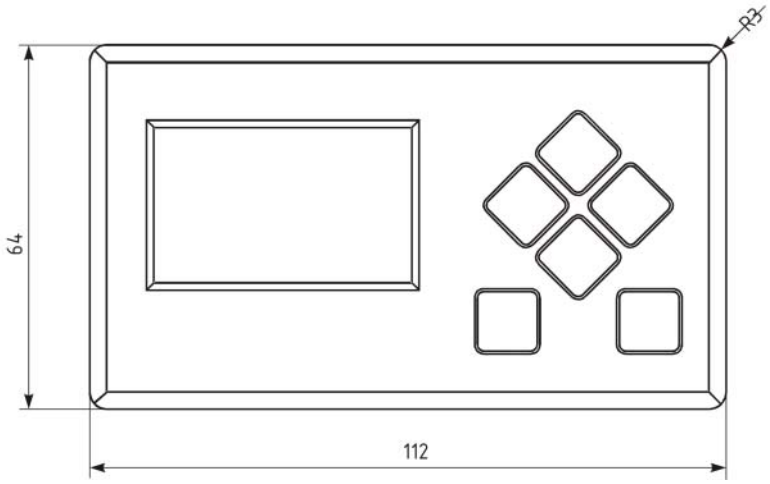

Fig. 3-3 UI300 front view

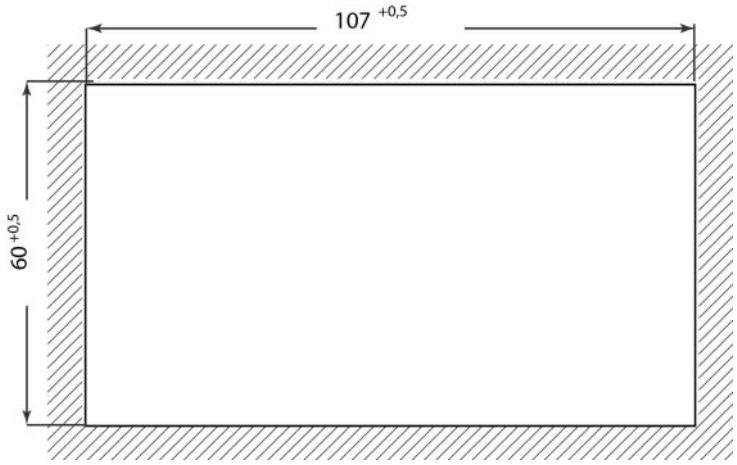

Fig. 3-4 UI300 panel cut-out

3 Product Description

Function	
Power supply:	230 V +10/-15 % 47-63 Hz 115 V +10/-15 % 47-63 Hz (on request)
Maximum backup-fuse:	10 A slow-blow
	To be used only in a grounded power line network!
Power consumption:	max. 30 VA
Switching threshold of ionisation current:	1 µA
Digital signal inputs:	Max. line length 10 m/33 ft Max. line length 20 m/66 ft for the following signals: Firing rate+ / firing rate- Boiler safety interlock chain (SIC) Burner ON Reset Alarm Fuel selection DFM
Digital outputs:	3 fuel valves max. 1 A cos φ 0,4 VL fan max. 2 A cos φ 0,4 oil pump max. 2 A cos φ 0,4 ignition transformer max. 2 A cos φ 0,2 alarm output max. 1 A cos φ 0,3
Resolution:	999 digit, 10 bit
Number of curve sets:	BT320/33x: 1 curve set (oil or gas) BT34x: 2 curve sets (oil/gas switchable; DFM300 or LCM100 required)
Number of programs:	unlimited (EEPROM)
Field bus-coupling (optional):	PROFIBUS DP Modbus TCP PROFINET LEM100 or LCM100 always required
Housing:	Polycarbonate + ABS
Dimensions:	200x115x61 mm/7.87x4.53x2.4 in
Weight:	1,0 kg/2.20 lb
Flammability:	UL-94 V0

Display UI300	
Display:	128x64 pixel, monochrome White backlighting (dimmable)
Dimensions:	112x64x24 mm/4.41x2.52x0.94 in
Weight:	140 g/0.31 lb
Housing:	Basic housing: Polyamide glass fibre reinforced LCD-display window: Polycarbonate
Flammability:	UL-94 V0
Cable length:	1 m/3.28 ft

Environmental Conditions

Operation:	Climatic conditions	Class 3K5 according to DIN EN 60721-3
	Mechanic conditions	Class 3M5 according to DIN EN 60721-3

Environmental Conditions		
	Temperature range	-20 ... +60 °C/-4 °F ... +140 °F (condensation is prohibited)
Transport:	Climatic conditions	Class 2K3 according to DIN EN 60721-3
	Mechanic conditions	Class 2M2 according to DIN EN 60721-3
	Temperature range	-20 ... +70 °C/-4 °F ... +158 °F (condensation is prohibited)
Storage:	Climatic conditions	Class 1K3 according to DIN EN 60721-3
	Mechanic conditions	Class 1M2 according to DIN EN 60721-3
	Temperature range	-20 ... +70 °C/-4 °F ... +158 °F (condensation is prohibited)
Electronic safety:	Degree of protection (DIN EN 60529):	BT300 – IP00 housing IP20 (terminals covered) UI300 – IP40 (clamping) IP54 (glued assembly)

3.3.2 Actuator

3.3.2.1 Actuators 662R550...

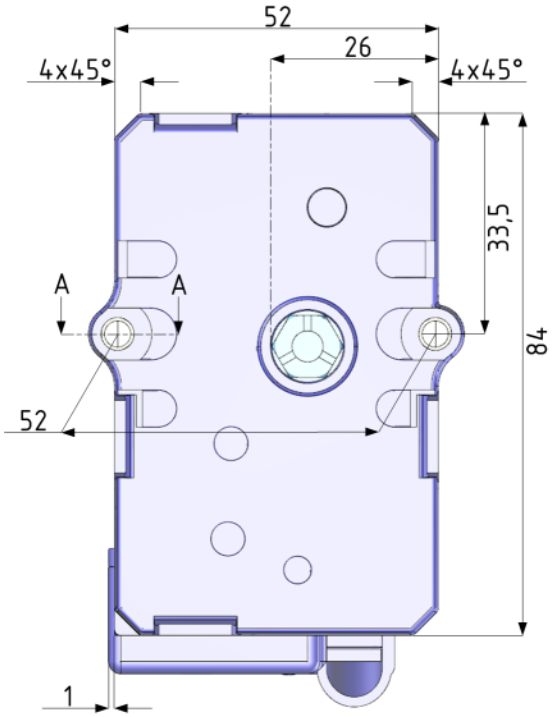

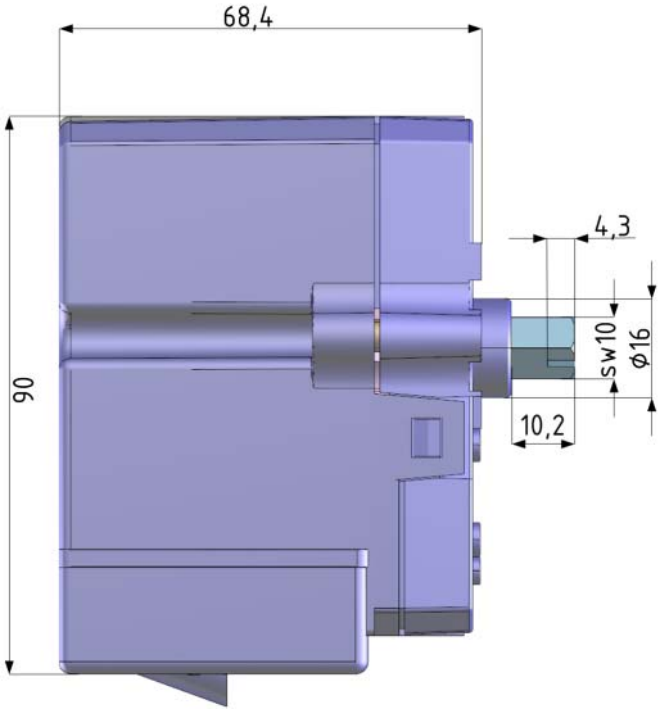

3 Product Description

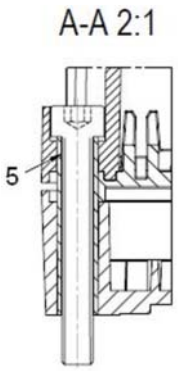

1 15.4 (+0.3/-1) including axial play
2 Cap cannot be removed by hand
3 Flexible control cable (black), length 1.5 m
4 Plug connector (RAST 2.5) pole number 6
5 Brass tube and M4 x 30 DIN 912 cylinder bolt fixed with O-ring

Function	
Power supply	24 VDC ±20 %
Floating time	5 s / 90° at 180 Hz
Direction of rotation 0° to 90°	right
Torque	0.8 Nm (both directions)
Holding torque	0.4 Nm (no power) 0.7 Nm
Permissible radial load	30 Nm (centre of output shaft)
Permissible axial load	5 N
Axial play of drive shaft	0.1 ... 0.2 mm
Cable length	securely connected 0.6 m pluggable max. 3 m

Environmental conditions		
Operation	Climatic condition	Class 3K3 according to DIN EN 60721-3
	Mechanical condition	Class 3M3 according to DIN EN 60721-3
	Temperature range	-20 ... +60 °C (condensation is prohibited)
Transport	Climatic condition	Class 2K3 according to DIN EN 60721-3
	Mechanical condition	Class 2M2 according to DIN EN 60721-3
	Temperature range	-20 ... +70 °C (condensation is prohibited)
Storage	Climatic condition	Class 1K3 according to DIN EN 60721-3
	Mechanical condition	Class 1M2 according to DIN EN 60721-3
	Temperature range	-20 ... +70 °C (condensation is prohibited)
Bursting strength	Peak voltage	4 kV
	Repeat frequency	2,5 kHz
Electrical safety	Protection class 2 as per DIN EN 60730	

⚠ DANGER!

Danger by electrical shock!

Shut BT300 down before opening the cover, otherwise it is possible to get in contact with conducting parts. This may cause an electrical shock. Only open BT300 when it is disconnected it all-pole.

▶ Disconnect BurnerTronic all-pole.

NOTICE

Damaging the 0,8 Nm actuator by opening the actuator.

Do not open the actuator at another part as the cover of the electric connection, otherwise the actuator will be damaged.
The warranty expires and is invalid.

▶ Do not open the actuator but at the cover of the electric connection.

3.3.2.2 Actuators 662R5001... / 662R5003...

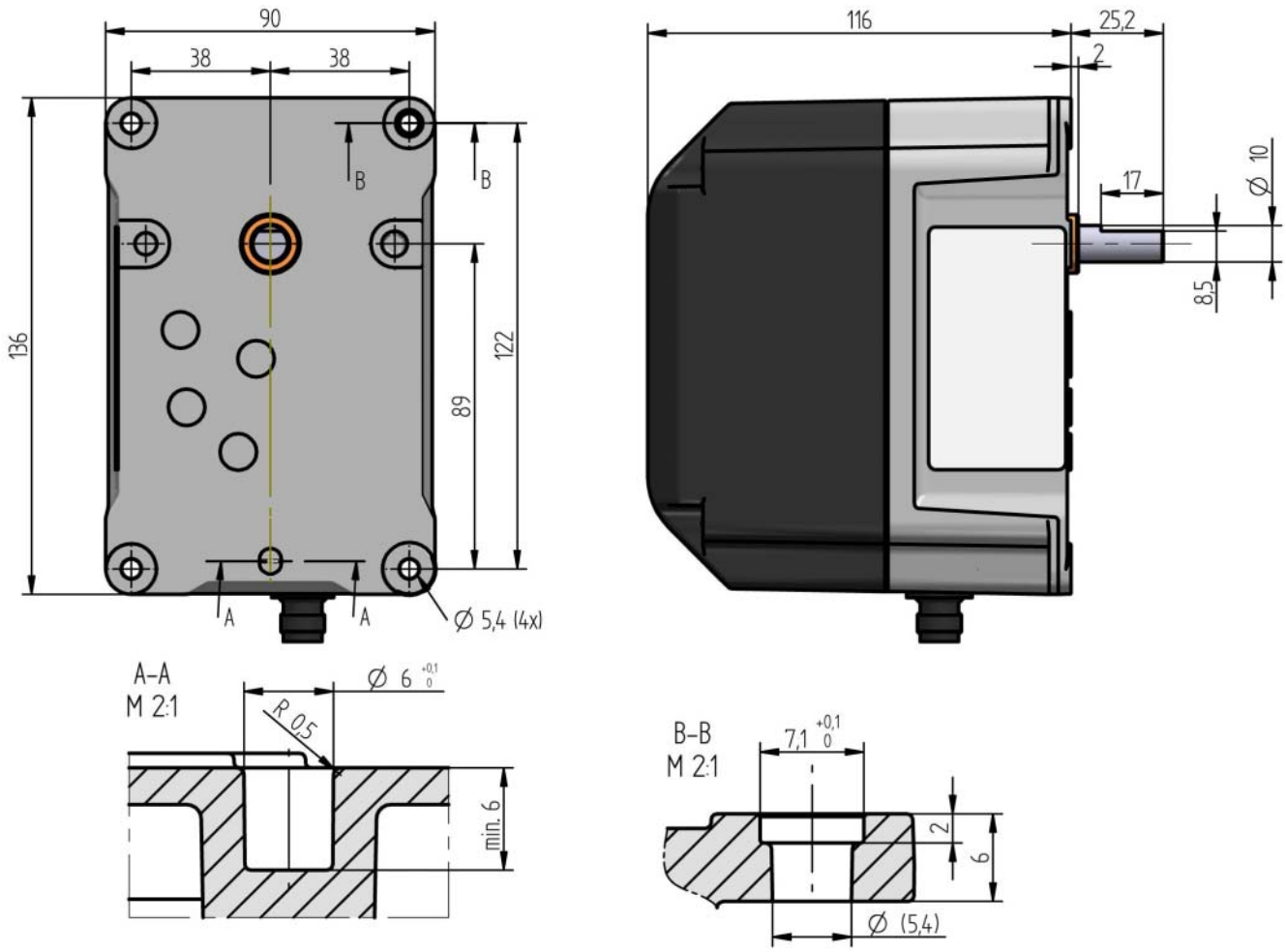

Fig. 3-5 Dimensional drawing of motor type 662R5001-0 and 662R5003-0 without cable but with plug

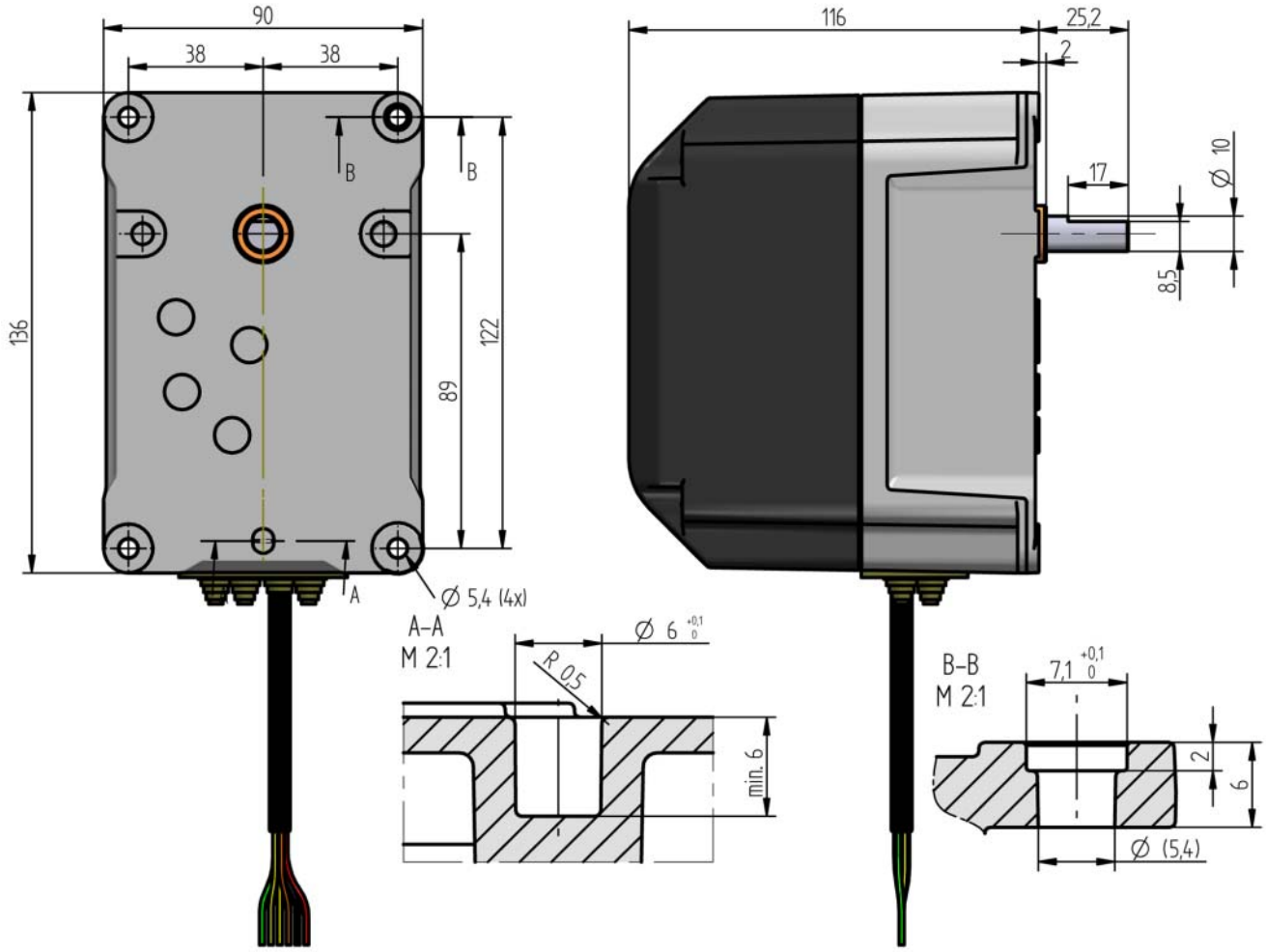

Fig. 3-6 Dimensional drawing of motor type 0R5001-1 and type 662R5003-1 with cable

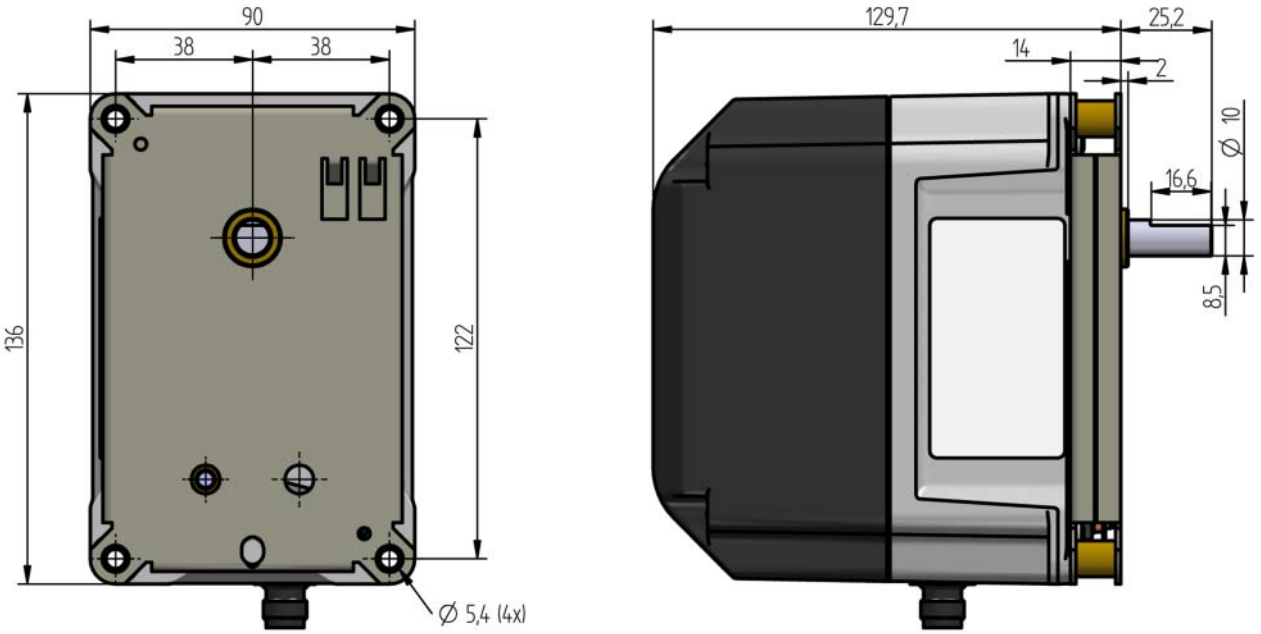

Fig. 3-7 Dimensional drawing of motor type 660R5009-0 without cable but with plug

3 Product Description

Function	662R5001...	662R5003...	662R5009...
Power supply:	24VDC ±20 %		
Floating time	5 s/90°	5 s/90°	15 s/90°
Direction of rotation 0° to 90°	left - view to the drive shaft		
Effective output torque	1.2 Nm (both directions of rotation)	3 Nm (both directions of rotation)	9 Nm (both directions of rotation)
Holding torque	0.82 Nm (currentless)	2.8 Nm (currentless)	6 Nm (currentless)
Permissible radial load	100 N (centre of output shaft)		
Permissible axial load	10 N		
Axial play of drive shaft	0.1 ... 0.2 mm	0.1 ... 0.2 mm	
Motor	RDM 51/6 stepper motor		
Angular resolution	0.1°/motor step	0.1°/motor step	0.03°/motor step
Rated resolution encoder monitoring	0,7°		
Monitoring accuracy	± 0,5°	± 0,5°	± 1.3125° (corresponds 44 motor steps)
Repeat accuracy	± 0,1°	± 0,1°	± 0,1°
Life cycle	2,000,000 motions forward and back performed on complete actuator range		
Degree of protection	IP54 according to DIN EN 60529-1		
Weight	1400 g		
Cable length	securely connected 1.5mpluggable max. 3 m	securely connected 1.5mpluggable max. 3 m	pluggable max. 3 m

Environmental conditions 662R5001.../662R5003.../662R5009...		
Operation	Climatic condition	Class 3K5 according to DIN EN 60721-3
	Mechanical condition	Class 3M5 according to DIN EN 60721-3
	Temperature range	-20 ... +60 °C (condensation is prohibited)
Transport	Climatic condition	Class 2K3 according to DIN EN 60721-3
	Mechanical condition	Class 2M2 according to DIN EN 60721-3
	Temperature range	-20 ... +70 °C (condensation is prohibited)
Storage	Climatic condition	Class 1K3 according to DIN EN 60721-3
	Mechanical condition	Class 1M2 according to DIN EN 60721-3
	Temperature range	-20 ... +70 °C (condensation is prohibited)
Bursting strength	Peak voltage	4 kV
	Repeat frequency	2,5 kHz
Electrical safety	Protection class 2 as per DIN EN 60730	

NOTICE

Damage of the actuator with 1.2, 3.0 and 9.0 Nm due to opening the actuators housing.

Opening the actuator's housing will damage the actuator. The warranty expires.

3.3.3 Flame Sensor/Flame Scanner



Fig. 3-8 KLC 1000

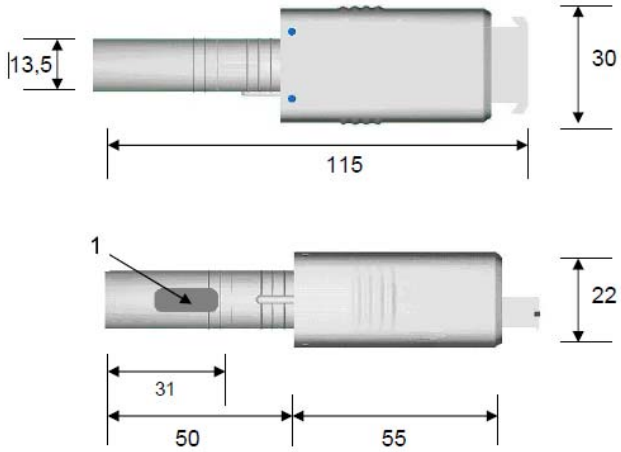

Fig. 3-9 Dimensions KLC 1000 (1 = radial scanning opening)

KLC10/KLC1000

Input Data	
Power supply:	KLC10: 120 VAC -15/+10 % 50-60 Hz KLC1000: 230/240 VAC -15/+10 % 50-60 Hz
Current consumption:	5,5 mA
Optical Evaluation	
Spectral range:	185 - 260 nm
Tolerable flame signal dips:	200 ms
Alignment to the flame:	left
Dimensions	
Weight:	0,028 kg (1 oz)
Connecting cable length **max.:**	1 m (39.4")

Environmental Conditions

Operation:	Temperature range	-20 ...+60 °C (-4 °F ... 140 °F) (temperatures >50 °C (122 °F) will reduce life cycle of the device)
	Humidity	max. 95 % r. h. (condensation is prohibited)
Electrical safety:	Protection category	IP41
	Protection class	II
	Protecting against contact	DIN EN 60730-2-5

3 Product Description

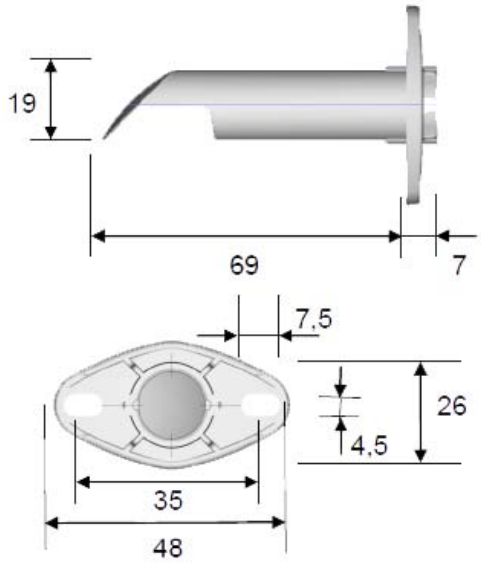

Fig. 3-10 Dimensions of angle adapter for KLC 2002

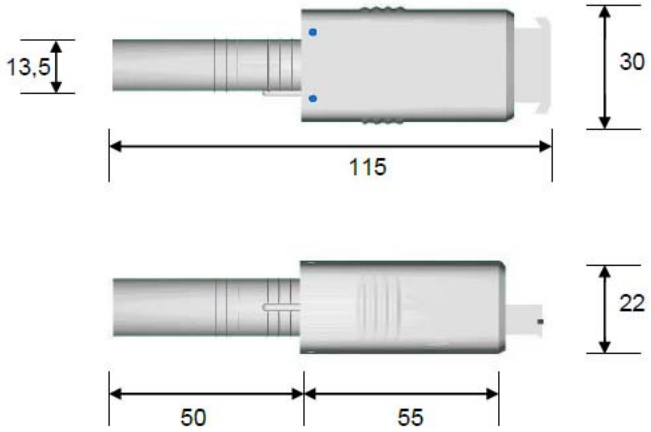

Fig. 3-11 Dimensions KLC 2002

KLC20/KLC2002

Input Data	
Power supply:	KLC20: 120 VAC -15/+10 % 50-60 Hz KLC2002: 230/240 VAC -15/+10 % 50-60 Hz
Current consumption:	3 - 4 mA

Optical Evaluation	
Spectral range: Design with optical filter 380 - 830 nm:	380 - 1150 nm
Sensitivity max.:	920 nm
Tolerable flame signal dips:	280 ms
Fading of the parasitic frequency:	>35 Hz (option)

Dimensions	
Weight:	0,029 kg (1.02 oz)
Connecting cable length:	1 m (39.37")
Mounting position:	any

Environmental conditions		
Operation:	Temperature range	-20 ...+60 °C (-4 °F ... +140 °F) (temporarily <1 min. up to +75 °C (+167 °F))
	Humidity	max. 95 % r. F. (condensation is prohibited)
Electrical safety:	Protection category	IP41
	Protection class	II
	Protection against contact	DIN EN 60730-2-5

4 Mounting and Functions

4.1 System Overview

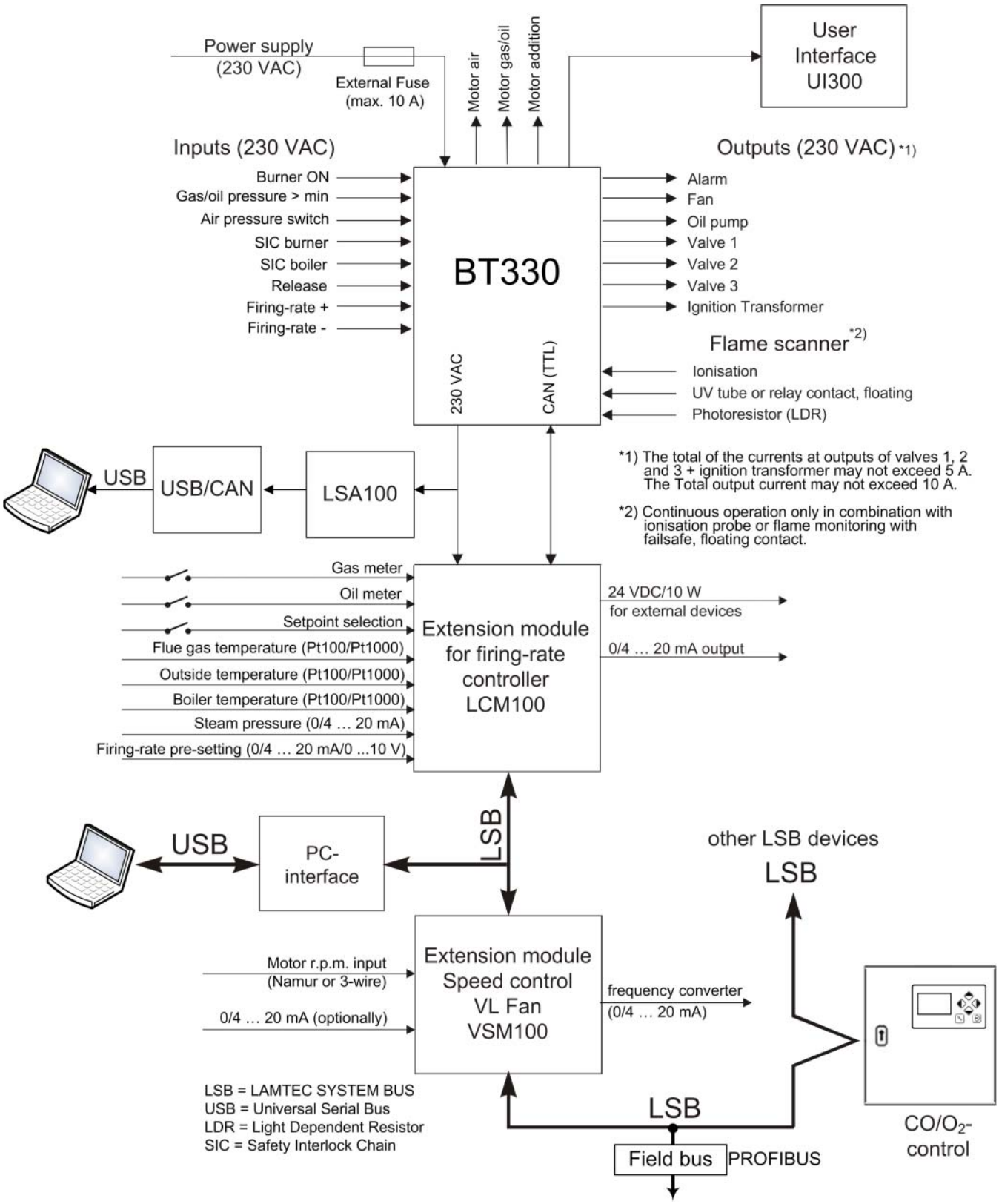

Fig. 4-1 System overview of BurnerTronic BT300

4.2 Connecting Diagrams

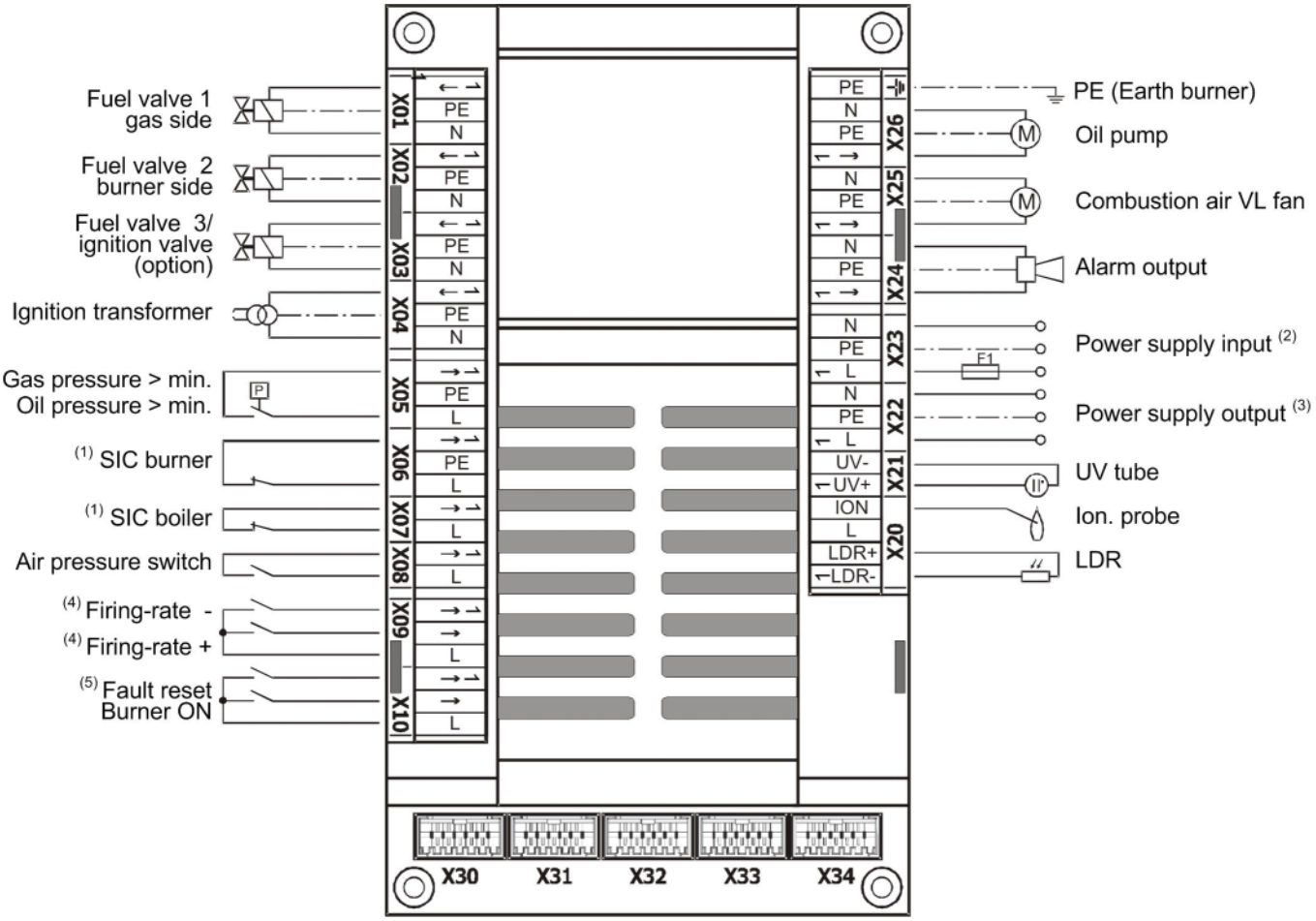

X30 = User Interface UI 300

X31 = LSB Option

X32 = continuous output 1, e.g. air damper

X33 = continuous output 2, e.g. gas damper

X34 = continuous output 3 (optional)

(1) SIC = safety interlock chain

(2) 230 V AC 47 - 63 Hz external fuse protection required (max 10 A slow-blow)

(3) 230 V AC for power supply to external devices

(4) Fuel selection for dual fuel burners with BT340 + DFM300 see chapter *7.2 Dual Fuel Module DFM300*

(5) Alternative CPI/POC connection see chapter *4.2.1 Optional Connections for the Fuel Line*

Maximum cable length

X01-X6+X08:	10 m		
X07+X09:	20 m		
X10:	20 m		
X20-X21:	3 m		
X22-X23:	unlimited	**X32-X34:**	3 m
X24:	20 m	**X31:**	1 m
X25-X26:	10 m	**X30:**	1 m

⚠ WARNING!

Conductors with max. 20 m cable length are allowed to have not more than 3 signal transfers in one cable, otherwise this would lead to dangerous malfunctions.

▶ Safety interlock chain (SIC) is often known as closed.

NOTICE

When running oil-solely burning applications, the function 'Oil pressure > min' is aligned with X05.

4 Mounting and Functions

When running oil/gas burning applications (BT340 in combination with DFM300), the function ’Gas > min’ is aligned with X05.

►Put in oil/gas applications, the pressure monitoring for ’Oil pressure > min.’ in the oil safety interlock chain (SIC).

4.2.1 Optional Connections for the Fuel Line

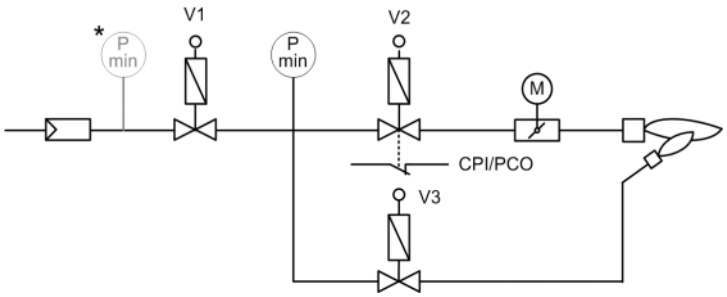

Fig. 4-2 Fuel train - gas modulating

V1	Fuel valve (gas side)
V2	Fuel valve (burner side)
V3	Optional ignition valve
P_{min}	Gas pressure min sensor
M	Actuator gas damper
*	Alternative positioning of the pressure monitor P_{min} – if valve leakage check is not necessary.
CPI/ POC	**C**lose **P**osition **I**ndicator (UK/AU) **P**rove **O**f **C**losure (US) ON switch at gas valve 2 which indicates that the valve is closed (option)

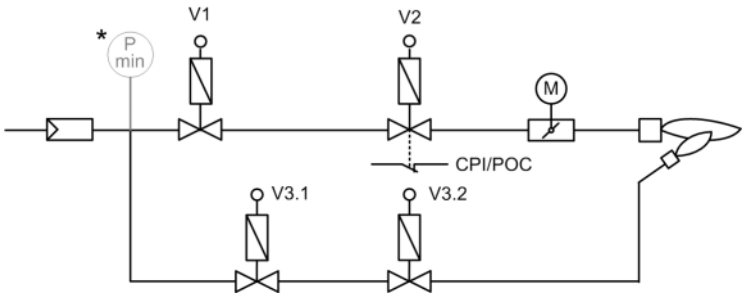

Fig. 4-3 Fuel Train - taking pilot gas previous to the main valves (BT300 software version 3.2 or higher)

V1	Fuel valve (gas side)
V2	Fuel valve (burner side)
V3.1	Ignition valve (gas side)
V3.2	Ignition valve (burner side)
P_{min}	Gas pressure min sensor
M	Actuator gas damper
*	Alternative positioning of the pressure monitor P_{min} – if valve leakage check is not necessary.
CPI/ POC	**C**lose **P**osition **I**ndicator (UK/AU) **P**rove **O**f **C**losure (US) ON switch at gas valve 2 which indicates that the valve is closed (option)

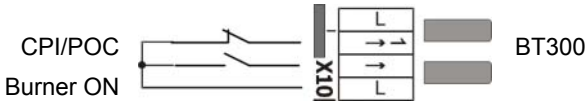

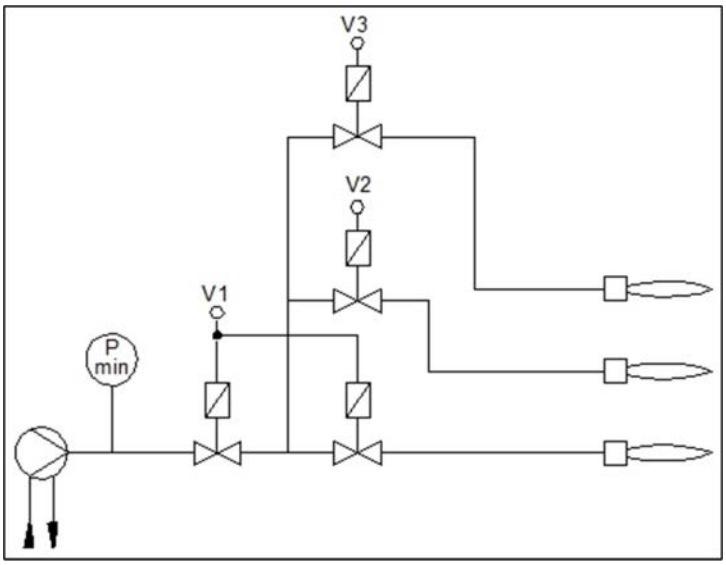

P_{min} Oil pressure min sensor
V1 Oil valve 1st stage
V2 Oil valve 2nd stage
V3 Oil valve 3rd stage

Fig. 4-4 Fuel train - oil 3-stage

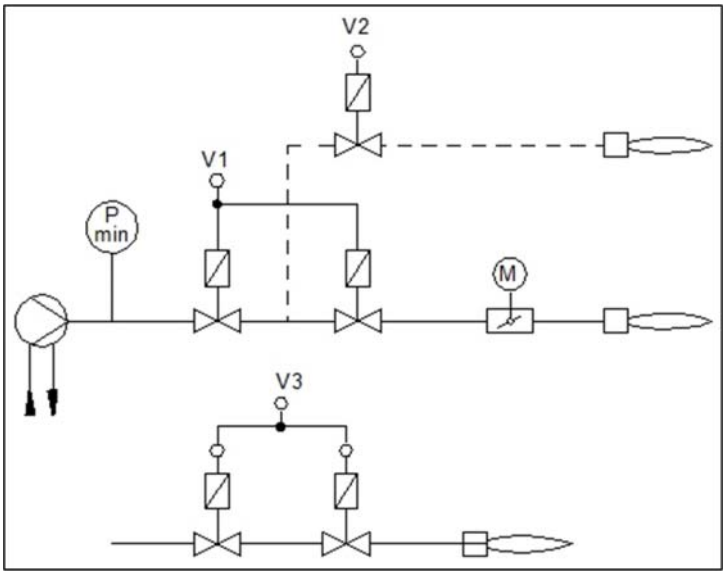

P_{min} Oil pressure min sensor
V1 Oil valve for modulated operation, oil valve 1st stage at 2-stage operation
V2 Oil valve 2nd stage at 2-stage operation
V3 Optional ignition valve
M Actuator for control valve oil/modulated operation

Fig. 4-5 Fuel train - oil modulating - oil 2-stage

Connection of the fuel valves see chapter *7.2 Dual Fuel Module DFM300*.

4.2.2 Optional Connections for the Flame Scanner

Electrical connections

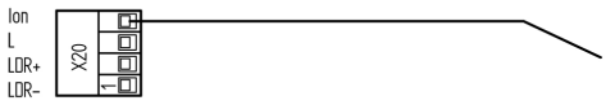

Fig. 4-6 Connecting diagram ionisation electrode

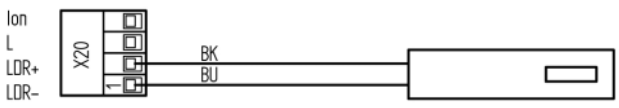

Fig. 4-7 Connecting diagram photo resistance e.g. Siemens QRB... or Honeywell MZ770

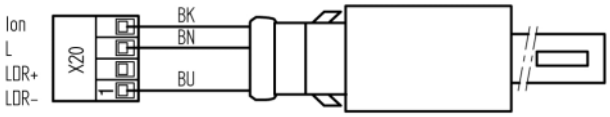

Fig. 4-8 Connecting diagram of the sensor Honeywell IRD1020

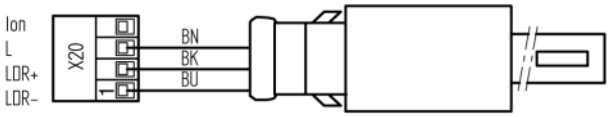

Fig. 4-9 Connecting diagram of sensor Honeywell IRD1010, KLC10, KLC20, KLC1000 or KLC2002

Colour code **BK** = black; **BN** = brown; **BU** = blue

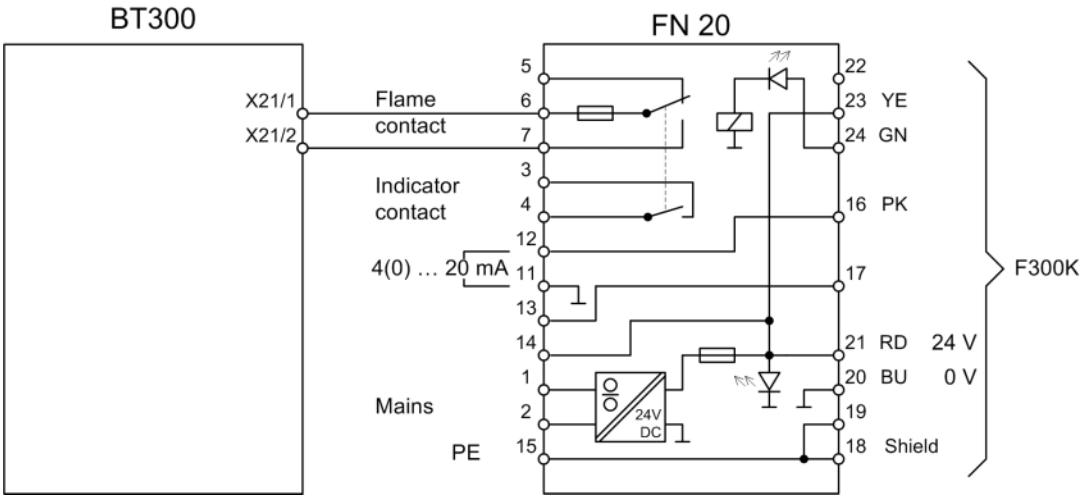

Fig. 4-10 Connecting diagram F300K via power pack FN20 (also valid for F200K)

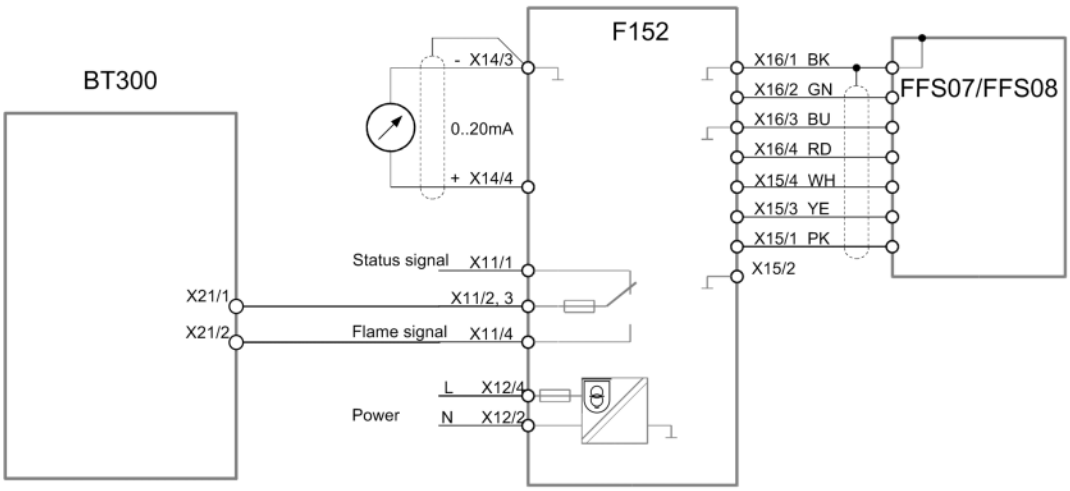

Fig. 4-11 Connecting diagram F152 with FFS07/FFS08

4 Mounting and Functions

Dimensional Drawings

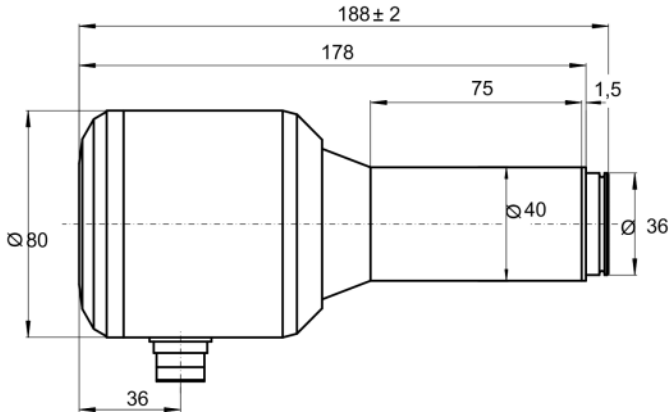

Fig. 4-12 Dimensional drawing F200K

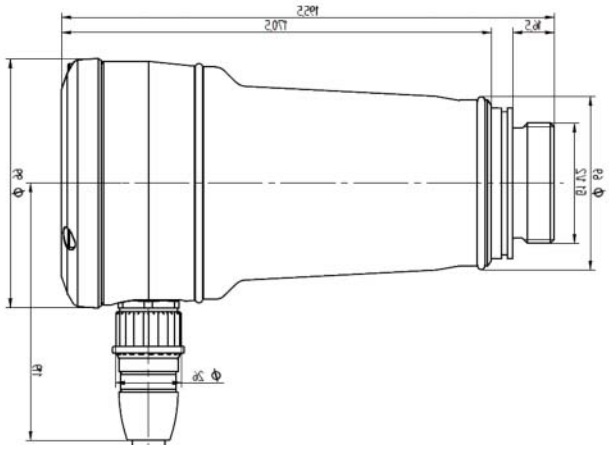

Fig. 4-13 Dimensional drawing F300K

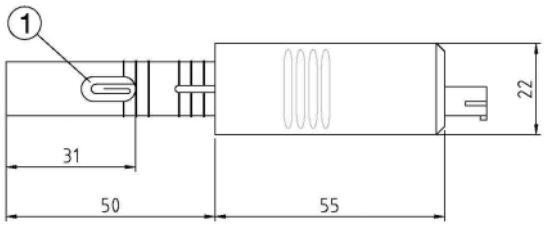

Fig. 4-14 Dimensional drawing KLC1000/KLC2002 top view

1 Radial opening (with KLC1000 only)

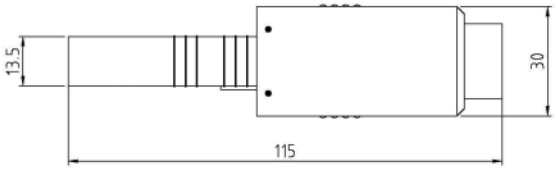

Fig. 4-15 Dimensional drawing KLC1000/KLC2002 side view

4.2.3 LSB Module Integration

1

EBM100 may be used as an alternative field bus module instead of PBM100

2

Alternative CO/O_2 measurement

3

LEM100 can be used as an alternative to LCM100 to connect LSB to BT100

4

CO/O_2 measurement

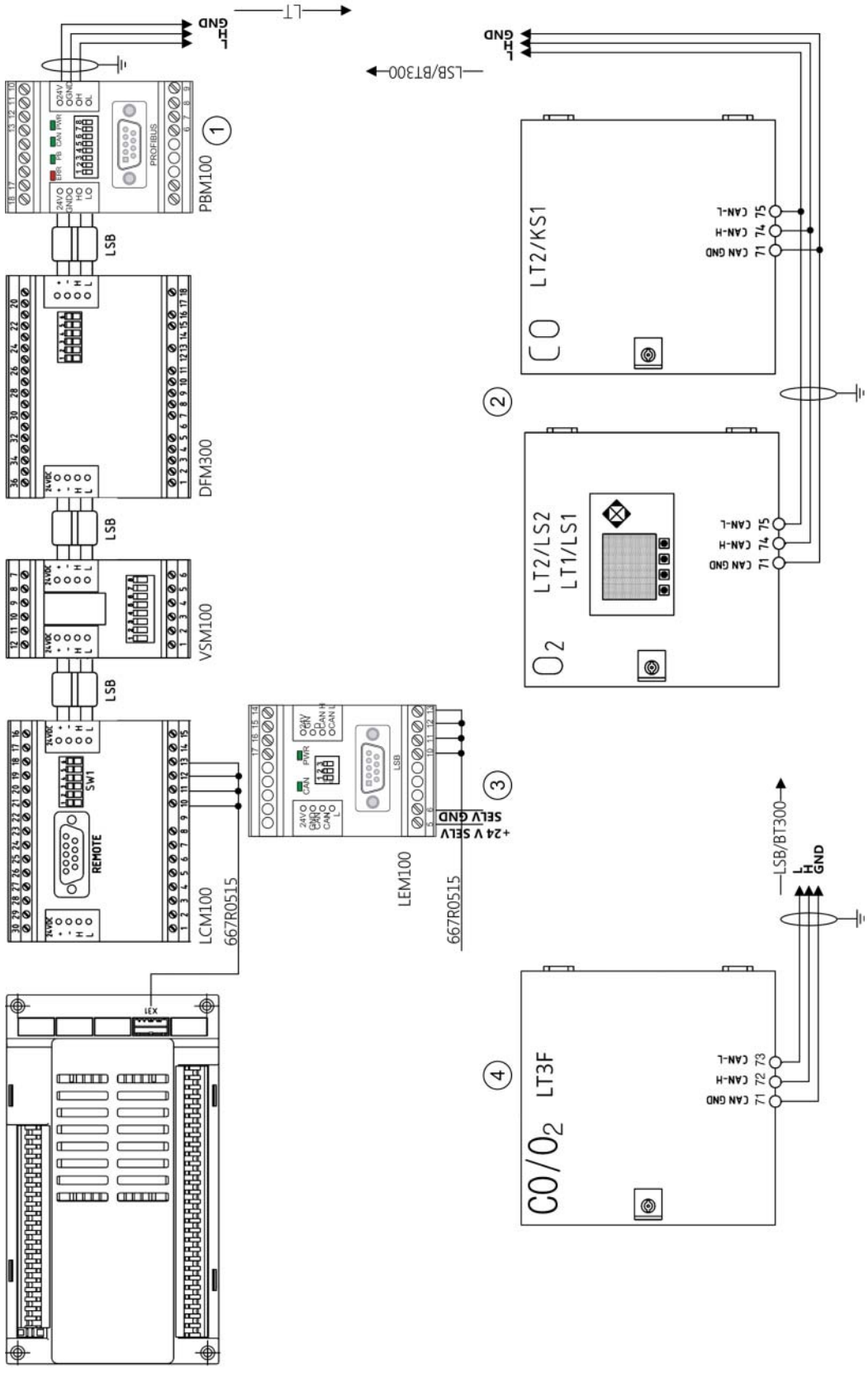

Fig. 4-16 Connecting diagram LSB module at BT300

NOTICE

Connecting LSB modules to BT300 requires an LCM100 or LEM100 with an external power supply 24 V SELV.
Connect VSM, DFM and LT3-F as needed on the LSB module.
Only connect H and L of the LCM's LSB to the LT3-F.

NOTICE

Consider while wiring the LAMTEC SYSTEM BUS (LSB) following notes:

Activate the 120 Ω terminating resistor at first and last device on LSB.

Set dip switch of BT300 module on position 1 (see chapter *7 Options*.
When using LT3, pay attention to the device-related manuals.

We recommend for cable length and conductor cross-section with LSB:

Length [m]	Cross-section [mm^2]	Type
0 - 40 m	2x2x0,34	twisted pairs with shielding, impedance 120 Ω
40 - 300 m	2x2x0,50	twisted pairs with shielding, impedance 120 Ω
300 - 500 m	2x2x0,60	twisted pairs with shielding, impedance 120 Ω

Devices on LAMTEC SYSTEM BUS (LSB) must be connected in serial/row (see *Fig. 4-17 Serial BUS connection*). The first and the last participant on LSB must be terminated with a termination resistor of 120 Ω. All the other BUS participants are not allowed to be connected to any termination resistor at all. A star wiring is not permitted (see *Fig. 4-18 Star BUS connection*).

For activation of the termination resistor, see also technical document LAMTEC SYSTEM BUS (DLT6095).

Correct: Serial Wiring (in a row)



Fig. 4-17 Serial BUS connection

Incorrect: Star Wiring

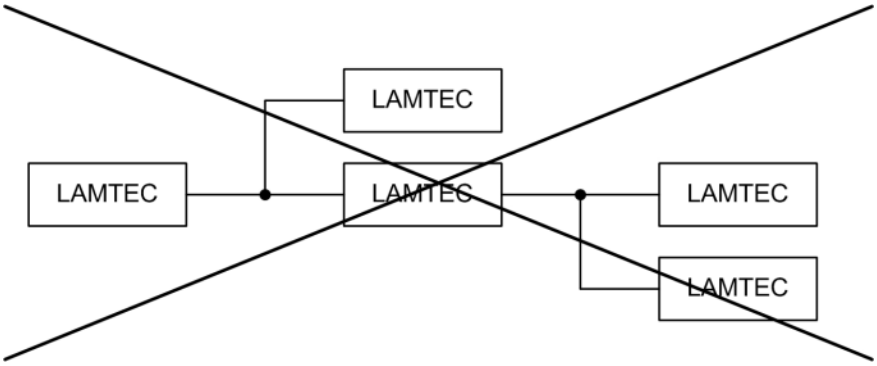

Fig. 4-18 Star BUS connection

4 Mounting and Functions

4.3 Flame Monitoring

4.3.1 Integral Flame Monitoring (Option)

The integral flame monitoring system is designed for standard applications (such as oil and gas flames in a burner located in a combustion chamber).

The flame monitor has the following tasks in combustion plants:

- Measuring the burner flame, regardless of conditions in the combustion chamber (e.g. glowing lining)
- Triggering control command internally to shut off fuel feed via burner control unit because of a flame blow-off.

The following types of flame sensor for intermittent operation (burner switched off at least once every 24 hours) are valid for use.

Manufacturer	Type	Settings P 800	Approval
LAMTEC	F152 with FFS07 o. FFS08	UV (up to v3.1) contact (from v3.3)	Continuous
	F200K with FN20	UV (up to v3.1) contact (from v3.3)	Continuous
	F300K with FN20	UV (up to v3.1) contact (from v3.3)	Continuous
Honeywell	IRD1010	LDR	Intermittent
	IRD1020	ION	Intermittent
	MZ770	LDR	Intermittent
SIEMENS	QRB1...	LDR	Intermittent
	QRB3...	LDR	Intermittent
	QRA2...	UV	Intermittent
	QRA10...	UV	Intermittent
	QRA4...	UV	Intermittent
	Ionisationselektrode	ION	Continuous
BST Solutions/ LAMTEC	KLC1000/KLC10	LDR	Intermittent
	KLC2002/KLC20	LDR	Intermittent

Continuous = continuous operation
Intermittent = intermittent operation

NOTICE

For continuous operation, connect following types of flame sensors to BurnerTronic BT330 and BT340:

– Flame scanners with ionisation electrode
– Flame monitor for continuous operation with potential-free contact e.g. F200K.
– The fastening system must be designed in a way that unintentional detachment of the flame monitor is prevented.

BT320 is despite using these flame sensors approved for intermittent operation only.

⚠ WARNING!

Danger from fuel ingress to combustion chamber after loss of flame!

Improper use or configuration of flame sensors not approved for continuous operation can result in hazardous situations and possible cause of explosion leading to loss of life and property. Failure to detect the loss of flame may result in an ingress of fuel into the combustion chamber and subsequent explosive condition.

- ▶ Make sure during setting of P300 to the approval of the scanner.
- ▶ Only set P300 to the value 0 if the flame sensor and the BT300 is approved for continuous operation.

NOTICE

The flame sensor QRA53 …, 55 …, 73 … and 75 are **not** authorized together with BT300 for continuous operation. The test of the UV tube via shutter is **not** supported by BT300.

4.3.2 Flame Sensors

4.3.2.1 KLC 20/KLC 2002

Brief Description

The wide band flame detector KLC 20/KLC 2002 is a compact flame detector, which is special designed for blue burning combustion systems. The patented flame signal evaluation is based on the flicker frequencies of the flame. A RISC-Processor enables evaluation and conversion of the flame signal into digital information to provide an output signal for burner control boxes. All flames will be detected by an automatic sensitivity control. Adjustments during commissioning and maintenance are not necessary!

Per international standards, the KLC 20/KLC 2002 will only detect signals caused by the flame flicker. Signals from continuous radiation and any kinds of constant frequency will be ignored. Signals caused by disturbing light sources, such as fluorescent tubes or background radiation from hot refractory will be cut off, so that unwanted influences are not possible.

By using LED-Display as an optical interface, the flame detector is able to read different relevant operating parameters (e.g. monitoring of flame signals, serial number).

Safety Instructions

The KLC 20/KLC 2002 is a safety device. Do not open, modify, or misuse it! Replace the flame detector in case of any damage, if dropped, exposure to shock, moisture, excessive temperature, or conditions that can destroy the flame detector, even though damage is not obvious. Repair is strictly prohibited!

Before working on the flame detector, switch off the power supply. Before first commissioning or replacement of the device, check external wiring!

Mounting Instructions

The KLC 20/KLC 2002 should be mounted close to the flame with straight alignment using the Mounting Flange KLC or another suitable holder with Ø0.551 inch (14 mm) opening. Mount the detector with a holder. The best flame signal will be achieved from strong flickering parts of the flame radiation. The angle of view, especially with sight tubes, must be of appropriate dimensions to avoid any reduction of flame radiation. Protect the sensor from other light sources.

NOTICE

To avoid any disturbance, do not align the detector direct to the ignition spark. Breakdowns during pre-purge procedure may occur.

The maximum length of the connection must be in accordance with the technical data. Install the detector connection cable with most possible distance to the ignition cable or the mains cable. Avoid to lay the connecting cable in parallel to these cables.

⚠ CAUTION!

Due to safety and technical regulations, a control shut down must be done at least once every 24 hours.

Operating Indicator LED

Via the built-in LED the flame detector KLC 20/KLC 2002 is indicating the following operating conditions:

LED is OFF	KLC is not active.
LED is blinking	KLC is active, safety test finished, no flame detected
LED is ON	KLC is active, safety test finished, flame detected

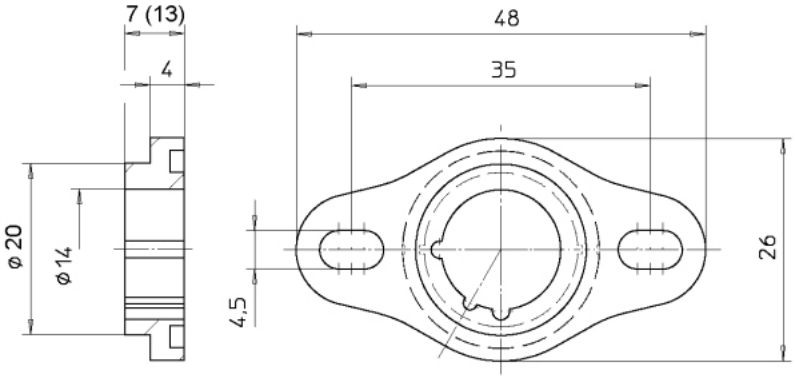

Mounting Flange KLC

The Mounting Flange KLC provides attachment and adjustment of the flame detector. The Mounting Flange KLC can be simply sealed to the burner housing using an o-ring. Height = 0.3 in (7 mm).

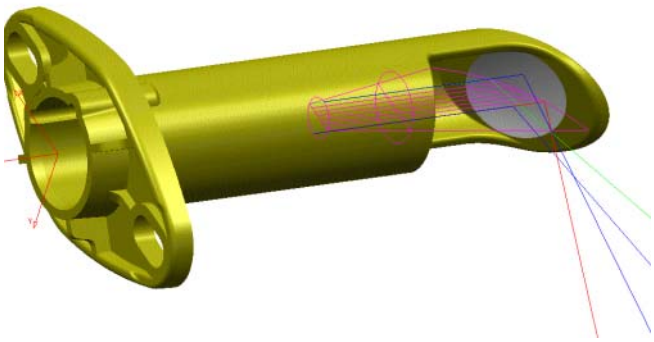

Viewing Angel Adapter KLC
for radial adjustment

Radial adjustment of the KLC2002 to the flame axis is possible with the optional viewing angle adapter, which can replace the Mounting Flange KLC. An optionally available angle adapter provides the radial adjustment to the flame axis of KLC2002 by an optimally shaped reflector surface. A special flame scanner type is not necessary. During handling, avoid touching the reflector surface and, if necessary, clean with a dry, soft and lint-free cloth.

Maintenance

To maintain the detector, just keep the sight glass clean by using a dry cloth. Do not use any kind of cleaning sprays or liquids. The flame scanner may only be touched at the lateral, corrugated regions when inserting or withdrawing it from the mounting flange.

Due to internal checks of the KLC 20/KLC 2002 no more tests are necessary. The flame scanner's make circuit/break circuit can be checked easily by holding the flame scanner to an AC operating light source (no torch or similar).

KLC 20/KLC 2002 switches the flame relay ON – the red LED is permanently ON. After 9 sec. the switching output is disconnected – the red LED flashes.

NOTICE

Due to the safety function of the disturbance frequency cut-off, a flame simulation is not possible by means of a simple art source of light. If a flame simulation, such as during the final inspection of the burner without a real flame is needed, a source of light with a modulating frequency between 60 and 150 cycles per second.

Disposal Information

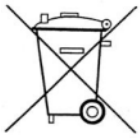

The flame detector is equipped with electrical and electronic components and must be disposed separate from household waste. Follow the local and actual regulations for waste disposal.

4.3.2.2 KLC 10/KLC 1000

Brief Description

The KLC 10/KLC 1000 is a compact UV flame detector, which has been developed for single flame combustion which produces little light or radiation in the visible spectrum and has very low flame modulation/flicker frequency. The design of the UV sensor ensures that the flame detector does not react to background radiation from hot refractory or from any other infra-red light source.

Flame intensity can be easily recognised by an optical LED display.

The flame detector KLC 10/KLC 1000 has been developed to meet the requirements of European Standards EN230 and EN298 for burner management control units which make a 'no-flame' check after normal burner shut down when the flame amplifier is permanently energised.

Safety Instruction

The KLC 10/KLC 1000 is a safety component, and repair or adjustment must never be attempted. Replacement of the flame detector is recommended in all cases of damage, due to impact shock, excessive moisture, or other problems rendering it inoperable. Repair work must never be attempted and is strictly forbidden by the relevant European Standards.

⚠ WARNING!

Prior to commissioning the unit; carefully check that the wiring connections have been made correctly. Also, before removing or checking the flame detector make sure the power supply is switched off.

Mounting Instructions

The KLC 10/KLC 1000 should be mounted as close as practical to the flame and on the same axis. The flame detector is compact and should be mounted with the KLC mounting flange or other suitable holder having a 14mm Ø opening. Fix the detector in the holder taking care to protect the sensor from other light sources.
To avoid any problems at start-up; please avoid alignment of the KLC detector with the ignition spark electrode as the flame detector may react with the ignition spark and cause burner shutdown during the air pre-purge/ignition start-up sequence. The maximum length of the connection cable must be in accordance with the technical data. Please ensure that the flame detector connection cable is kept well apart and is completely separated from high-energy igniter- and power cables to avoid electrical interference problems.

4 Mounting and Functions

⚠ CAUTION!

For safety reasons and within the technical regulations, a controlled burner shut-down of the burner must occur and be guaranteed to happen at least once in every 24 hours of operation.

Operating Indicator LED

The flame detector KLC 10/KLC 1000 indicates the following operating conditions and flame signal strengths via the built-in LED.

LED is OFF	KLC is not switched on – no power supply or 'no flame' is detected
LED is FLASHING	KLC has detected a flame; the quality of the flame signal is indicated by the intensity of the flashing of the LED – fast flashing indicates a healthy flame signal and vice versa - slow flashing indicates a weak flame signal.
LED is ON	KLC has detected the strongest level of flame signal.

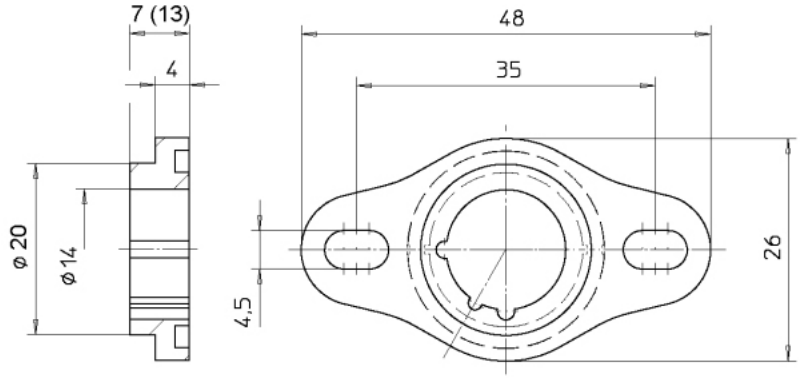

Mounting Flange KLC

The mounting flange allows the detector to be held and adjusted in a suitable position to view the flame. An O-ring seal is available which will give the mounting flange an air tight seal to the burner housing if required. Height = 7 mm.

Maintenance

The installation and commissioning must be done by qualified personnel only. Before energizing the KLC flame detector, check the cable and wiring connections if they are in accordance to the diagram of the burner manufacturer. For good maintenance which will ensure trouble free operation of the KLC flame detector; keep the sight glass clean by wiping with a soft dry clean cloth. During commissioning and after any cleaning maintenance, the flame detector should be checked, as the UV tube is subject to a natural ageing process and towards the end of its life span (ca. >10.000 h at an ambient temperature of <50 °C) it is prone to malfunction. To check that the flame detector is sound, we recommend the following procedures be followed:-:

- When starting the burner sequencer, the flame scanner must be shaded - after ending of the safety time the burner sequencer must run to fault condition!
- When starting the burner sequencer, the flame scanner must be lighted up by an external UV radiation e.g. pocket lighter or gas flame (ambient light/room illumination is not sufficient) – the burner sequencer must run to fault condition during pre-purge period!
- In BURNER OPERATION the flame scanner must be shaded – depending on the burner sequencer's type, the burner sequencer must run to fault condition either after restarting at the end of the safety time or directly after shading the flame scanner.

Disposal Instructions



The flame detector is equipped with electrical and electronic components and must be disposed separately from household waste. Follow the local authority regulations for electrical component waste disposal.

4.4 Process Sequence Charts

Key to process sequence charts		
	Any condition	
t1	Waiting for safety interlock chain gas, scan of air pressure monitor min.	any
t2	Time for pressure build-up in the gas test line (available with activated leakage test)	2,4 s
t3	Actuator running time	30 s - 60 s
t4	Delay of the recirculation damper	0 - t5
t5	Pre-purge period	adjustable
t6	Pre-ignition time	adjustable
t7	1st safety period	3 s gas/5 s oil
t8	Stabilisation period	adjustable
t9’	2nd safety period	3 s gas/5 s oil
t10	Operating phase	any
t11	Control mode	any
t12	Time for pressure relief in the gas test line	3 s
t13	Post-purge period	adjustable
t14	Control elements at base load/firing rate	
t15	After burning time	adjustable
t16	Checking flame extinction	5 s
t17	Leakage test, gas valve 2	30 s
**	Recirculation is released as soon as the flue gas threshold P322 is reached and the delay time in P331 has expired after reaching operation position (base firing-rate/ control).	
CPI	Close Position Indicator (UK/AU) Limit switch on gas valve 2 which indicates that gas valve 2 is closed.	
POC	Prove Of Closure (US) Limit switch on gas valve 2 which indicates that gas valve 2 is closed.	

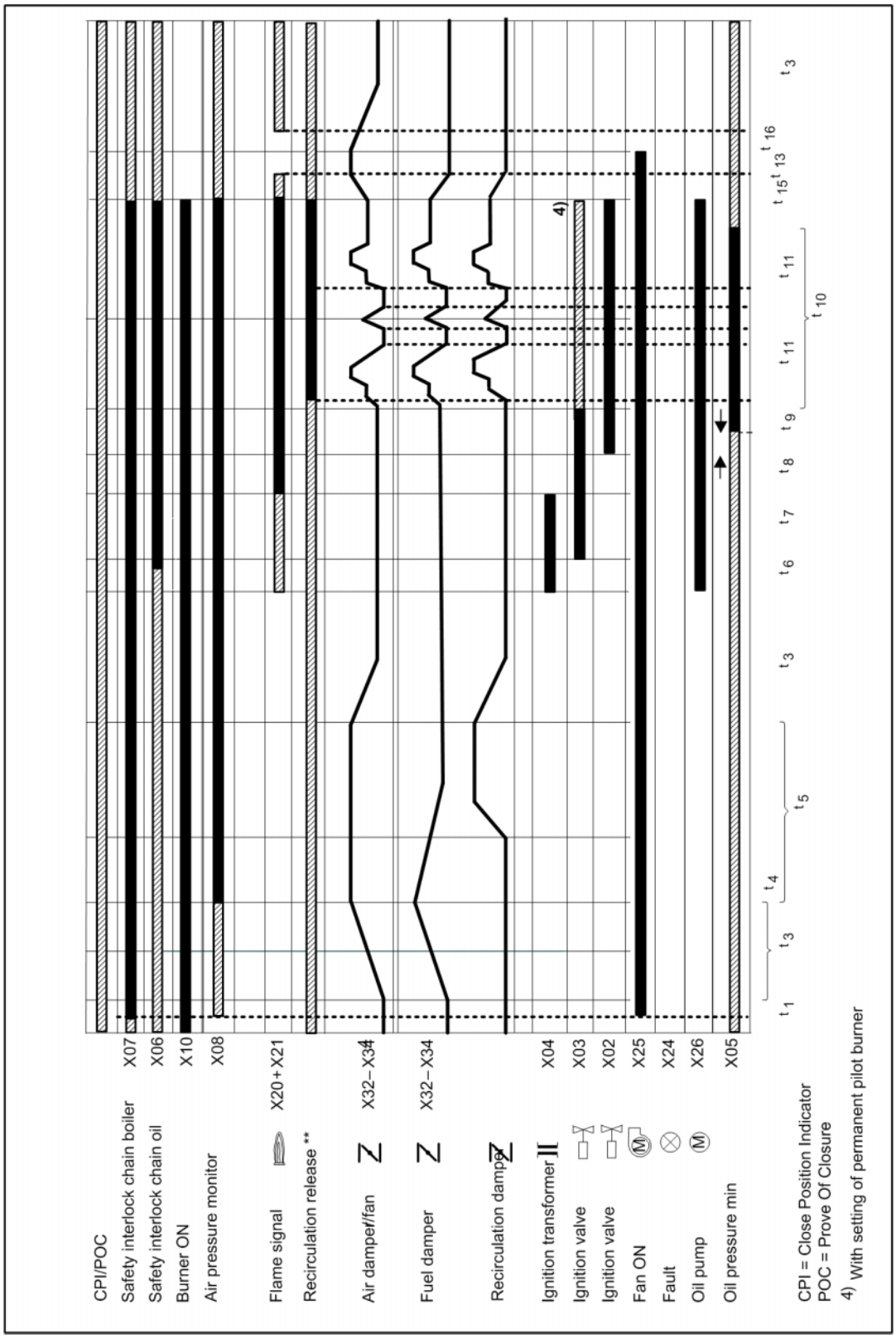

Fig. 4-19 Oil with pilot burner BT300

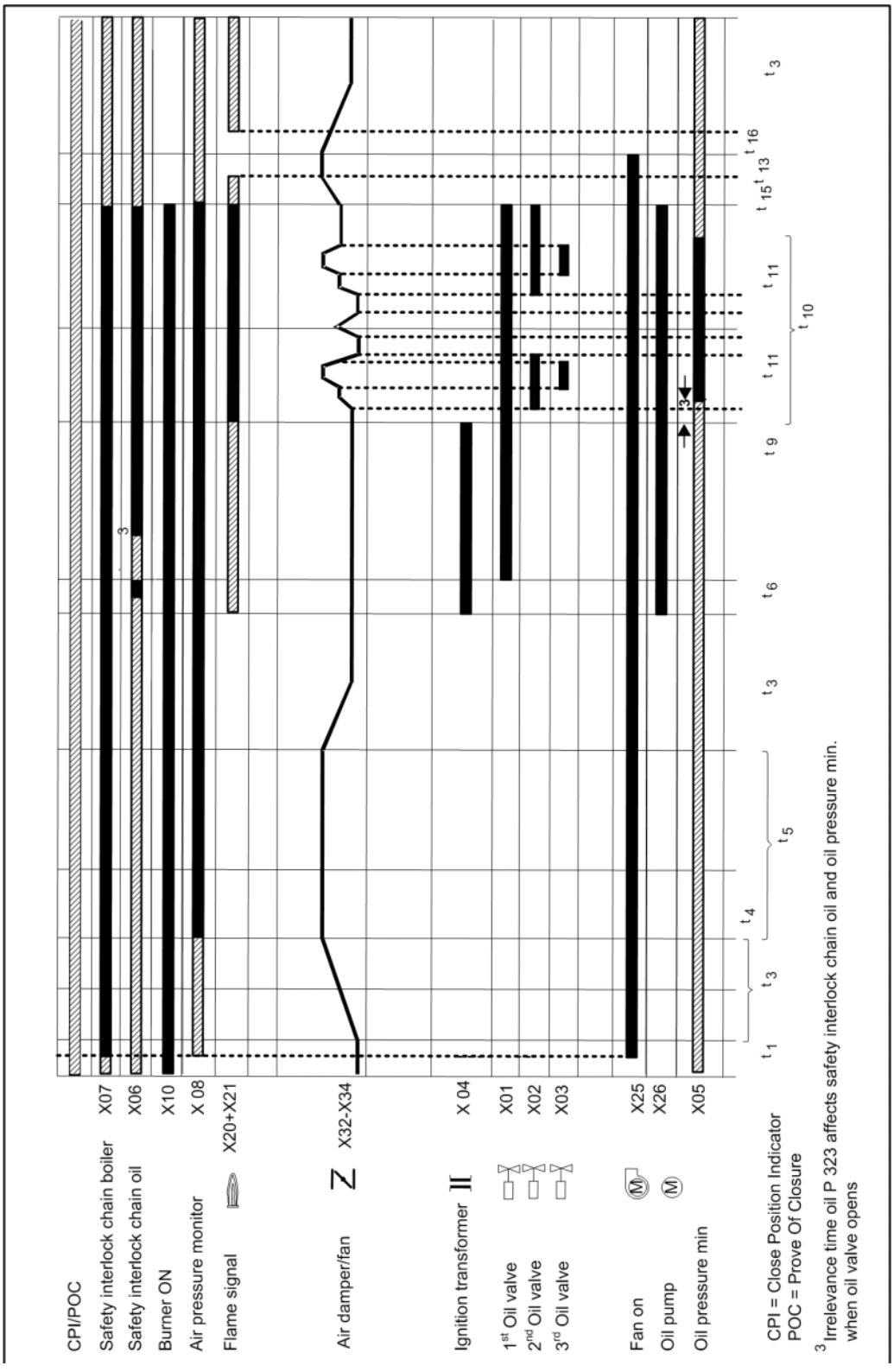

Fig. 4-20 Oil without pilot burner BT300

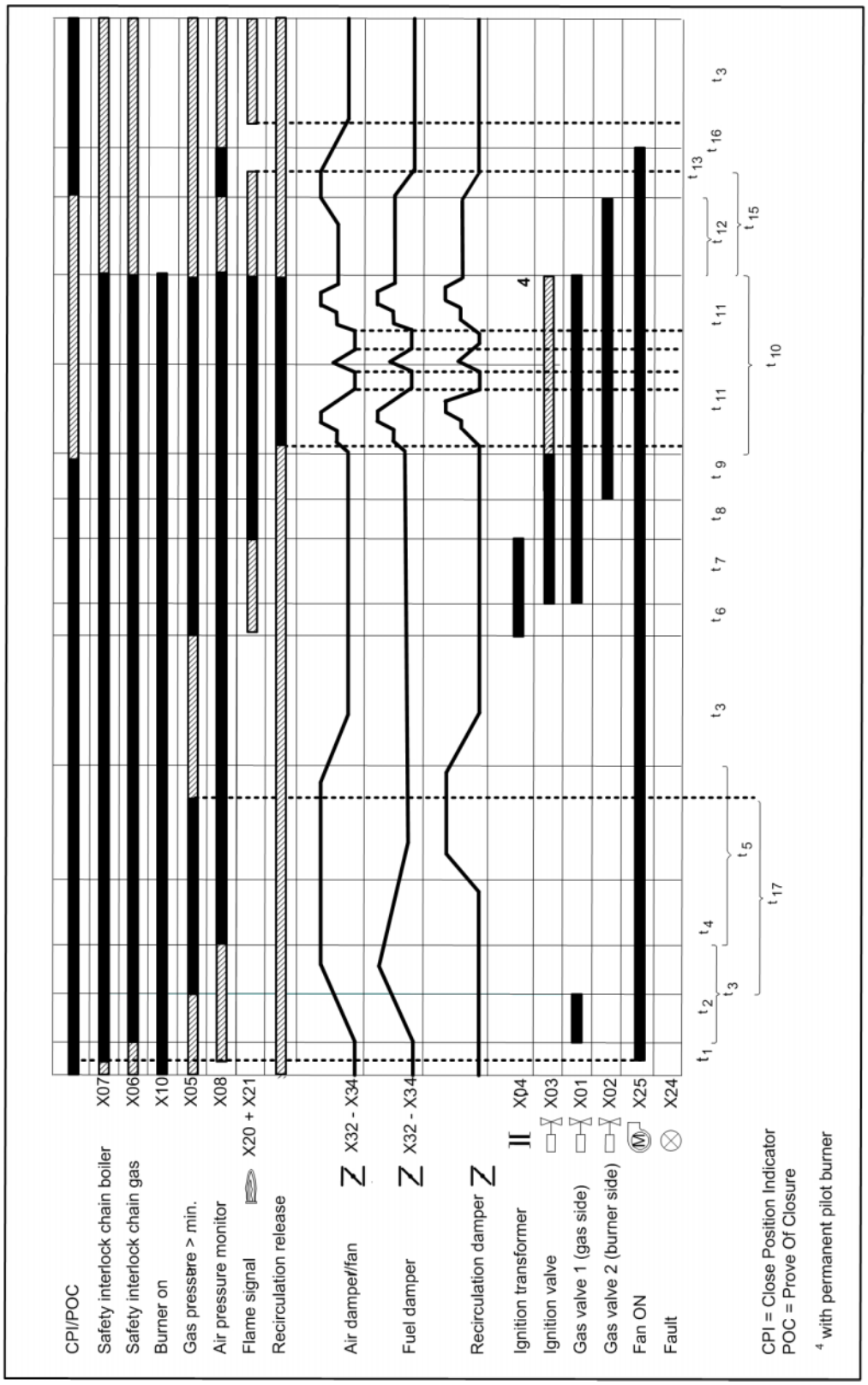

Fig. 4-21 Gas with pilot burner and leakage test BT300

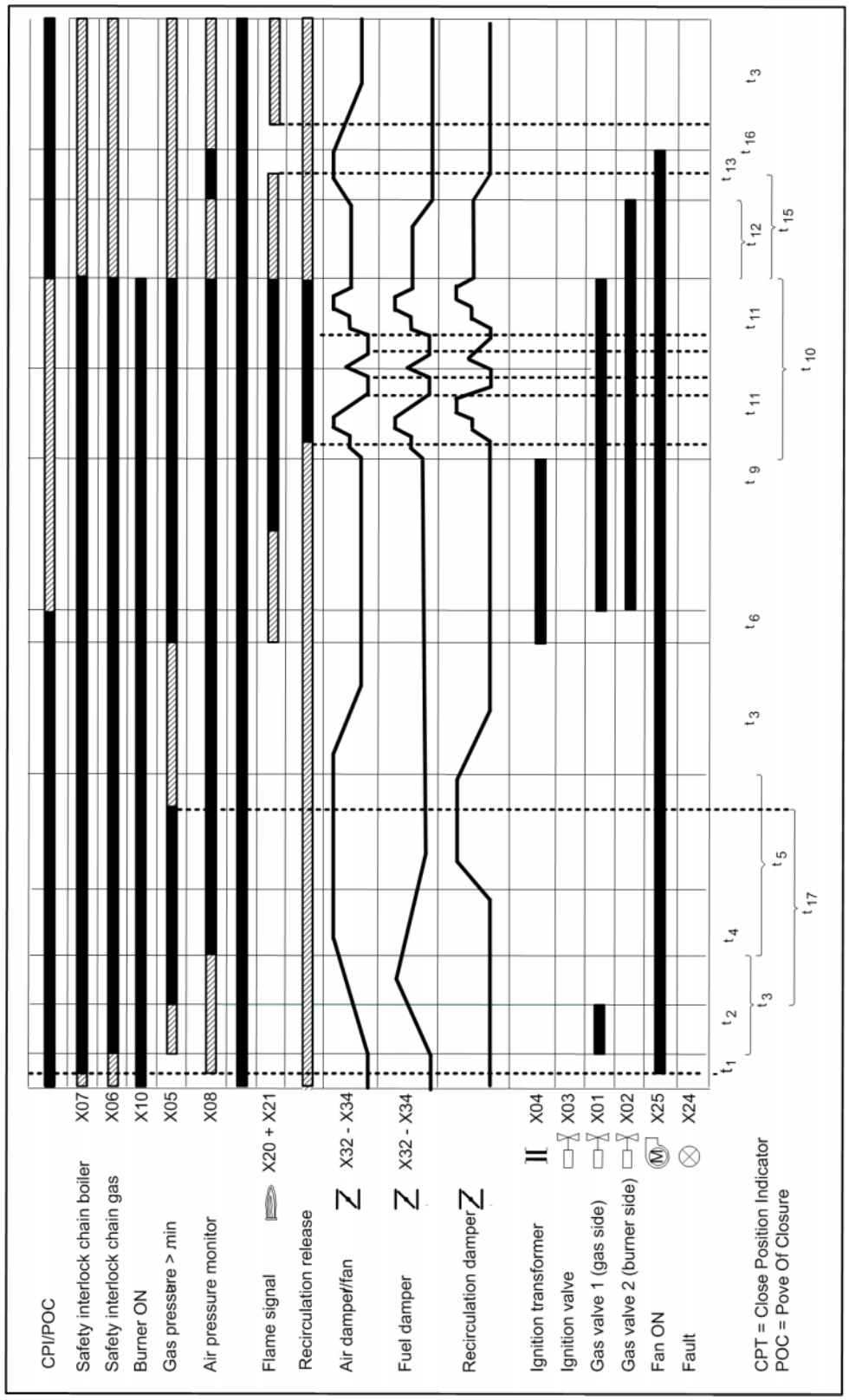

Fig. 4-22 Gas without pilot burner and leakage test BT300

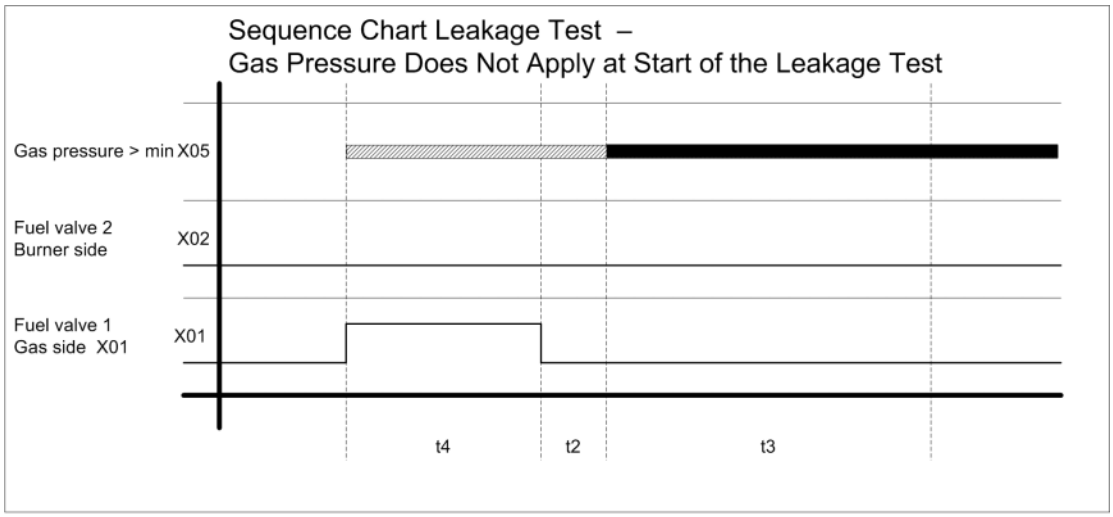

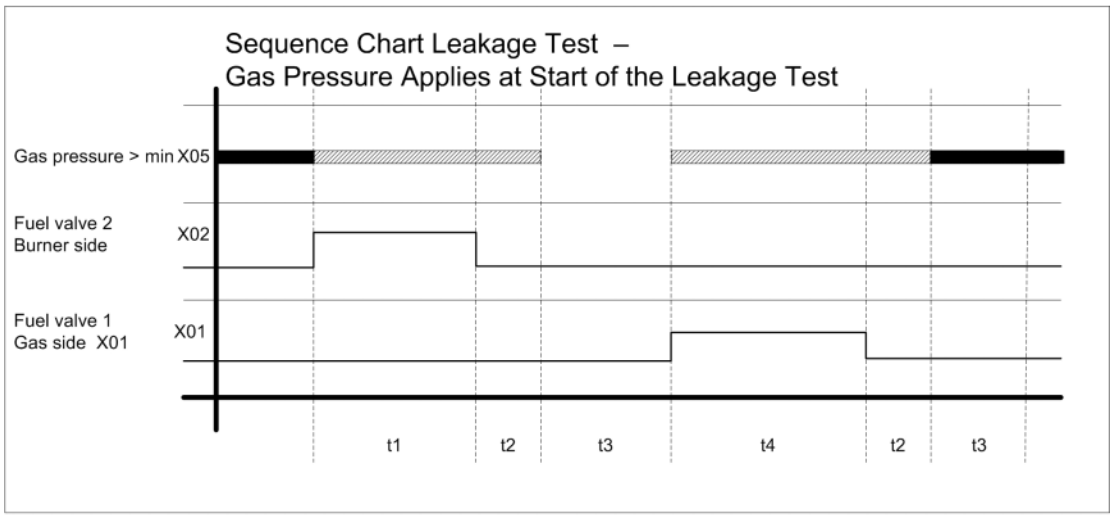

t1: Ventilation time, always 2 s
t2: Delay time, always 2 s
t3: Leakage test time, adjustable
t4: Filling time, adjustable

= Signal is present
= Signal may be present
= Signal must not be present

Fig. 4-23 Leakage test BT300

4.5 Leakage Test for Main Gas Valves

4.5.1 Calculation Example

With BT300 the gas pressure monitor is also applicable to the monitoring of minimal gas pressure. Therefore the minimal gas pressure of the burner must be set.

The valve leakage test time t3 (P 311) would be set by BT300. The time t2 for BT300 is fixed to 2s. The time t3 (P 311) must be set in a way that the maximum allowable leakage rate Q_{Leck} can be securely detected. The maximum leakage rate stated in EN1643 and ISO23551-4 is 0.1% of the nominal volumetric flow of the gases or a minimum of 50l/h.

Example 1

Burner capacity =1000 KW
Fuel = natural gas H, calorific value = 10 kW/m^3
Nominal volumetric flow of the gases = 100 m^3/h
Leakage rate max. = 0,1 m^3/h or 100l/h

Example 2

Burner capacity =1000 KW
Fuel = propane, calorific value = 25,9 kW/m^3
Nominal volumetric flow of propane = 38,6 m^3/h
Leakage rate max. = 50 l/h (not 38,6 l/h)

Calculation

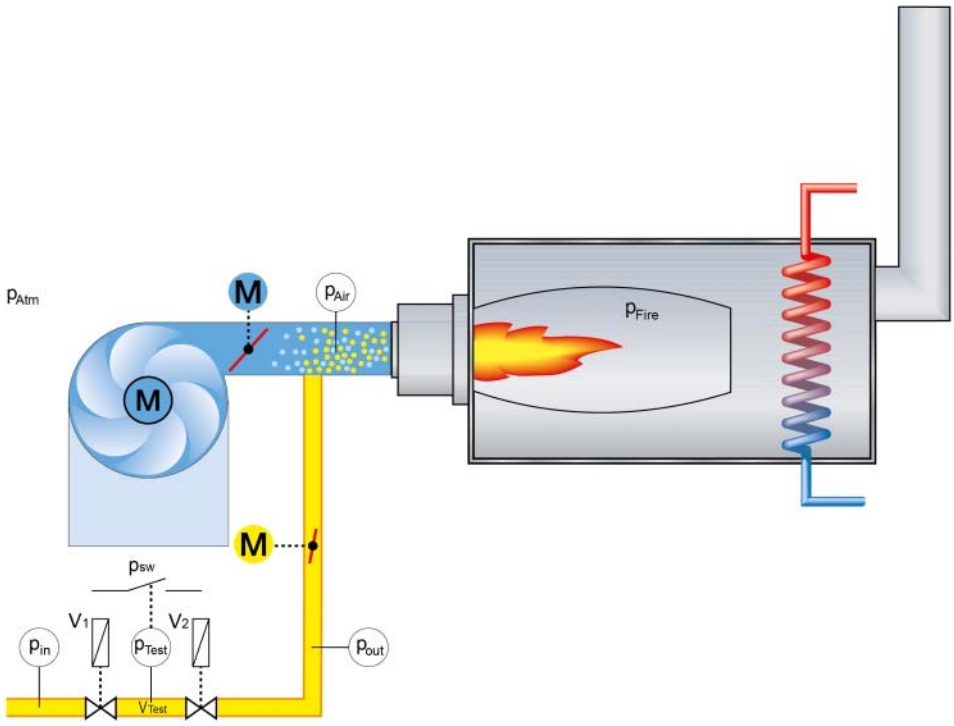

Fig. 4-24 Principle scheme

The test volume V_{test} must be calculated with tube diameter and valve volume. The value volumes are provided by the valve manufacturer. If valve 1 and valve 2 are be used as a double valve, the test volume would be provided by the valve manufacturer.

The leakage test V_{Leak} is calculated according to the Boyle-Mariotte principle.

$p_1 \cdot V_1 = p_2 \cdot V_2$
p = absolute pressure
V = gas volume

This is valid for the test of valve 1 V1:

$$t3 = \left(\left(\frac{p_{sw} - p_{out}}{p_{out}}\right) \cdot \frac{V_{test}}{Q_{Leak}} \cdot 3600\ s/h\right) - t2 = \left(\frac{p_{sw\,e} - p_{out\,e}}{p_{out\,e} + p_{Atm}}\right) \cdot \frac{V_{test}}{Q_{Leak}} \cdot 3600\ s/h\right) - t2$$

Should t3 be negative, at least 1s must be set.
If the calculation of t3 for valve 2 is higher than t3 for valve 1, the value for the calculation of valve 2 must be adjusted.

$$Q_{leak} = \left(\left(\frac{p_{sw} - p_{out}}{p_{out\,e} - p_{ATM}}\right) \cdot \frac{V_{test}}{t3 + t2} \cdot 3600\ s/h\right.$$

Q_{leak}	Leakage rate in l/h
p_{sw}	Absolute pressure on the switching point of pressure monitor (adjusted overpressure + atmosphere pressure)
$p_{sw\ e}$	Adjusted overpressure on switching point of pressure monitor
$p_{out\ e}$	Output pressure on gas valve V2 during purge
p_{Atm}	Atmospheric pressure (average of 101,3 kPa at sea level)
V_{test}	Test volume between the valves
t2	Settling time is always 2 s
t3	Adjusted leakage check time

NOTICE

p_{Schalt} must always be higher than p_{out}.
Otherwise V1 would be recognised as leaking even if it is not.

This is valid for the test of valve 2 V2:

$$t3 = \left(\left(\frac{p_{in\ e} - p_{sw\ e}}{p_{in\ e} + p_{Atm}} \right) \cdot \frac{V_{test}}{Q_{Leak}} \cdot 3600\ s/h \right) - t2$$

If t3 is negative, at least 1 s must be set.
If the calculated t3 value of valve 1 is higher than t3 for valve 2, the calculated value of valve 1 must be adjusted.

$$Q_{leak} = \left(\left(\frac{p_{in\ e} - p_{sw\ e}}{p_{in\ e} + p_{Atm}} \right) \cdot \frac{V_{test}}{t3 + t2} \cdot 3600\ s/h \right)$$

Q_{leak}	Leakage rate in l/h
p_{sw}	Absolute pressure on switching point of pressure monitor (adjusted overpressure + atmosphere pressure)
$p_{sw\ e}$	Adjusted overpressure on the switching point of pressure monitor
p_{in}	Absolute input pressure on gas valve V1
$p_{in\ e}$	Overpressure at gas valve V1 input
p_{Atm}	Atmosphere pressure (average of 101,3 kPa at sea level)
V_{test}	Test volume between the valves
t2	Settling time is always 2 s
t3	Adjusted leakage check time

4.5.2 Leakage Test Process Flow

The valve leakage test checks if the main gas valves are sealed. For this purpose the gas pressure of the supply is analysed.

As valve leakage test section (space between the two main valves) burns empty whenever the burner is switched off, this part is usually pressureless at start-up (gas pressure > min = 0). This is checked by BT300. At this point, main gas 1 opens briefly and gas flows into test section (gas pressure > min switches from 0 to 1). While main gas 1 valve is open gas pressure must apply.Otherwise BT300. detects gas deficiency. Gas pressure must remain at least constant during valve leakage test period (2 s + P 311). The valve leakage test is considered complete then.

If leakage test section is not empty at start-up (e.g. resulting from a previous fault shut down), main gas valve 2 opens first. The leakage test line is then purged (depending on the plant, either in the combustion chamber or through the roof – for wiring proposition, see chapter *4.5.4 Valve Leakage Test Venting Over the Roof*). During leakage test period section is checked whether it remains pressureless or not. Apart from that the process is the same as described above.

The leakage test takes place prior to ignition.

The pressure monitor for the leakage test line must be connected to the ’Gas pressure > min’ input on plug X05. It also monitors the minimum pressure during operation. If a different minimum pressure should be monitored during operation, the pressure monitor must be inserted into the safety interlock chain gas or into the controller loop (burner ON).

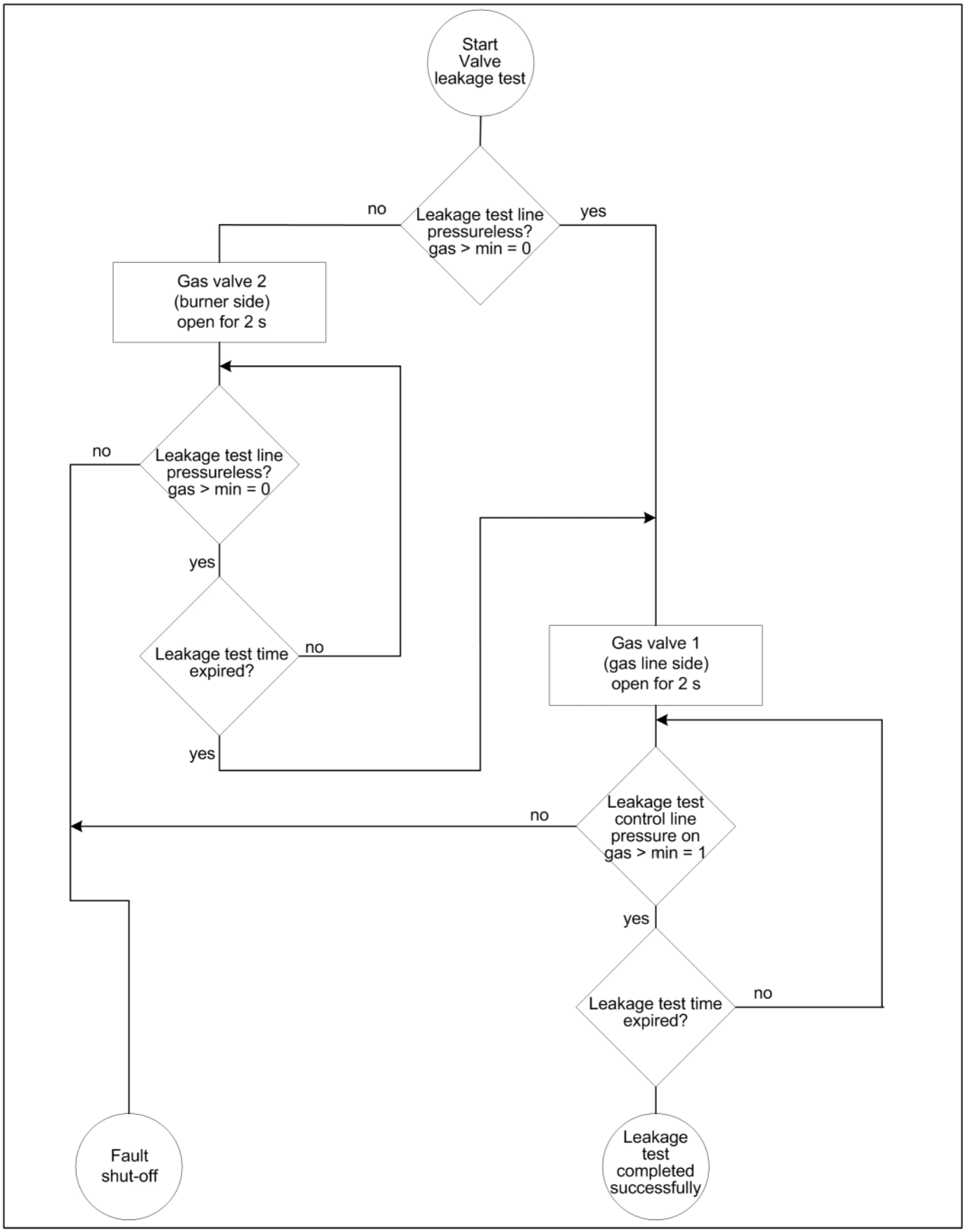

Fig. 4-25 Leakage test process diagram

4.5.3 Reaction on Gas Deficiency

If main gas 1 valve is open and the pressure drops below the minimum pressure, gas deficiency is detected. This causes a safety shut down and fault indication H611. Further reactions are depending on the settings in P301 (automatic restart).
If P301 = 1 (no automatic restart) BT300 remains permanently in a fault position and must be unlocked if gas pressure returns.
If P301 = 0 (automatic restart according to TRD) or P301 = 2 (automatic restart according to EN676), BT300 waits until the delay in P328 has elapsed and tries to start again then.
If gas deficiency is detected once more the delay will be doubled with every further attempt to restart until a delay one hour is reached.
The remaining delay is displayed in the User Interface UI300.

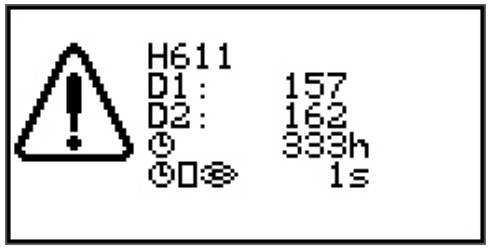

Fig. 4-26 Indication of fault H611 gas deficiency with restart

4.5.4 Valve Leakage Test Venting Over the Roof

NOTICE

Consider diameter of gas line in the roof purge. For purge, plug X02 is activated for 3 s. Make sure that this period is sufficient even for smallest purge line diameter!

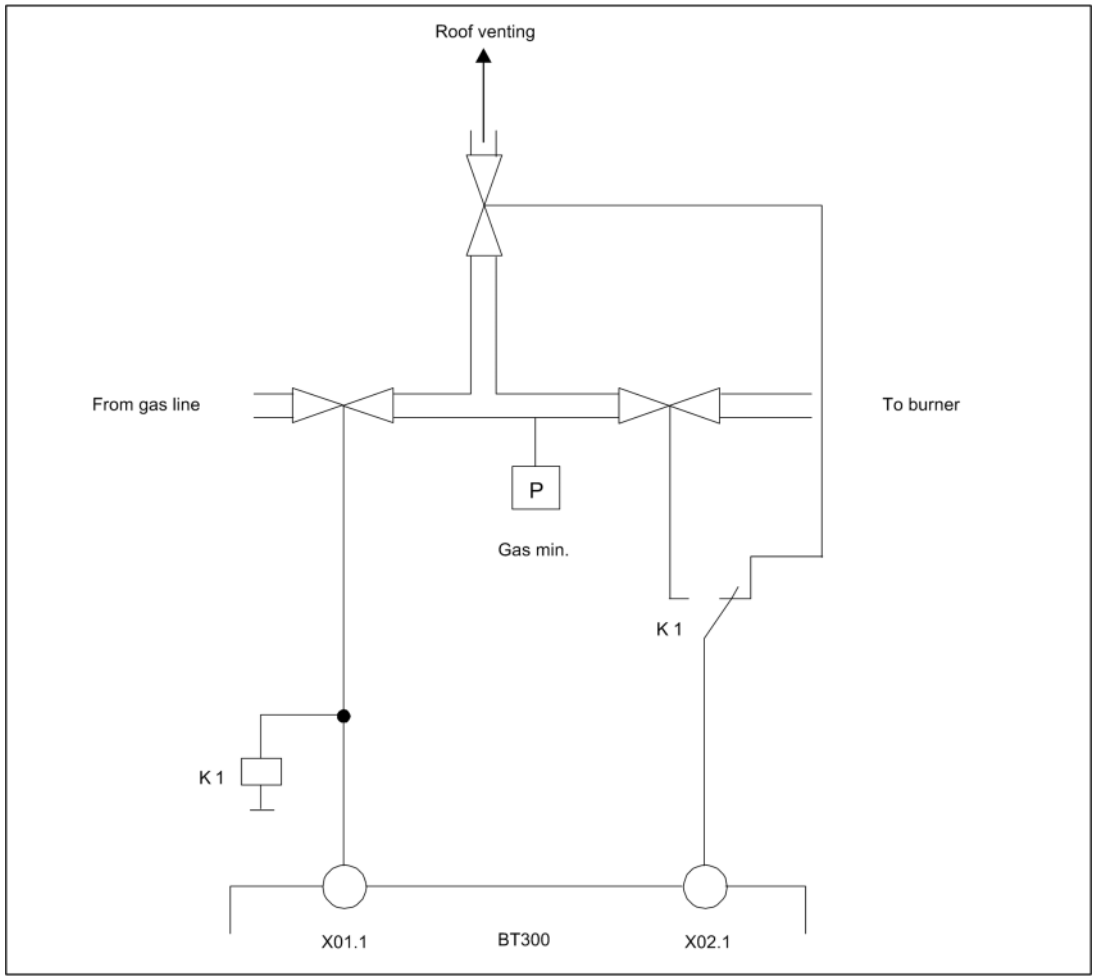

Fig. 4-27 Wiring proposition for purge of gas line via roof in combination with BurnerTronic

4.6 Staged Operation

Function

BT300 has not only the ability of shifting the burner firing rate in oil operation infinitely but 2-stage and 3-stage. Therefore oil valve 2 and oil valve 3 is switched ON and OFF depending on the position of air channel 1.

NOTICE

O_2 trim is not possible in 2-stage operation because O_2 trim needs a minimum of 3 curve points.

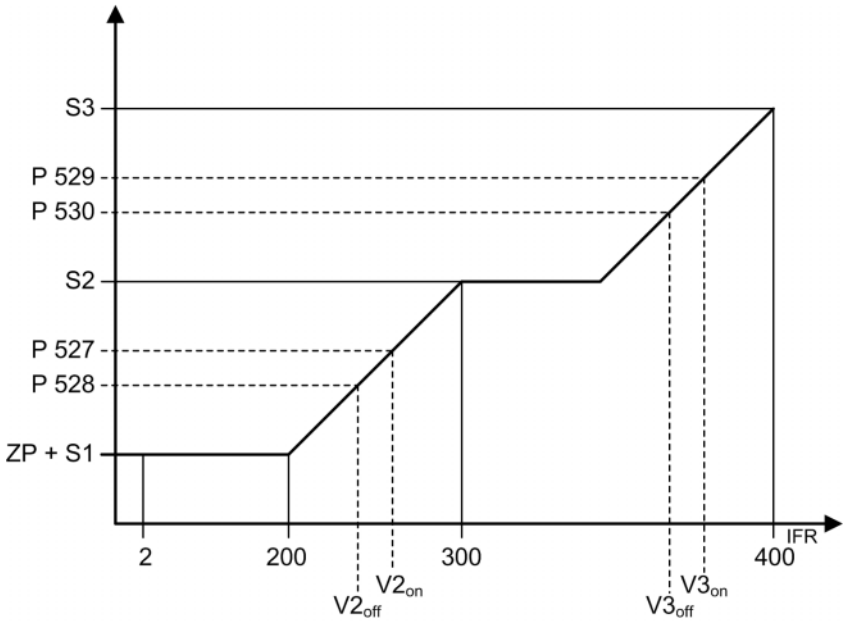

Fig. 4-28 Switching threshold of stage operation

$V2_{on}$	Switch-on point valve 2	P 528 ... P 530	Parameters 528 ... 530
$V2_{off}$	Switch-off point valve 2	S1 ... S3	Threshold 1 ... 3
$V3_{on}$	Switch-on point valve 3	IFR	Internal firing rate
$V3_{off}$	Switch-off point valve 3	ZP	Ignition point

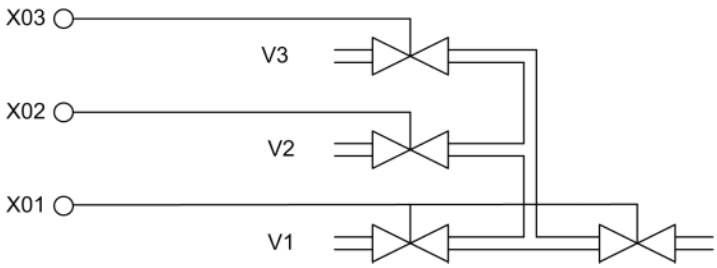

Firing Rate Controller

If firing rate controller is realised by TPS inputs at BT300 or DFM300 the signals are valued as follows:

Firing Rate +	Firing Rate –	Stage	
OFF	OFF	1	
OFF	ON	2	not recommended!
ON	OFF	2	
ON	ON	3	

The firing rate thresholds are defined in P531 ... P534 if firing rate controller is realised by the following options:

- Firing rate controller in LCM100
- TPS input at LCM100
- Bus

NOTICE

When using TPS input via X9.x P 531, P 532, P 533 and P 534 are not necessary.

Example for a 2 stage oil burner with firing rate controller by LCM100:

Situation:

- The burner has only one air flap at channel 1.
- The burner is ignited directly at an air flap position of 288 Digit.
  This position is stage 1.
- The 2nd stage has an air flap position of 793 Digit.
- At air flap position of 520 Digit the valve for the 2nd stage is switched ON (P 527).
- At air flap position of 500 Digit the valve for the 2nd stage is switched OFF again (P 528), when switching from the 2nd stage to the 1st stage.
- As soon as the firing rate request of LCM100 exceeds 430 Digit (P 531) the change over from 1st stage to 2nd stage starts.
  If the firing rate request of LCM100 drops below 350 Digit (P 532) the change over from 2nd stage to 1st stage starts.

Sequence:

- The burner starts and remains at the base firing rate of 200 Digit as long as LCM100 does not request a higher firing rate than 430 Digit.
  The air flap remains on a position of 288 Digit.
- If the firing rate request of the LCM100 is 430 Digit, the air flap actuator runs open.
- As soon as a position of 520 Digit is reached, the 2nd oil valve is switched ON and the air flap runs to the operation position of 793 Digit.
  The internal firing rate is 300 Digit.
- As soon as the firing rate request of LCM100 drops below 350 Digit the air flap closes again.
- If the air flap drops below a position of 500 Digit the 2nd oil valve is switched OFF.
  The air flap runs to a position of 288 Digit. The internal firing rate is 200 Digit.

4.7 Flue Gas Recirculation

To recirculate exhaust gases from the flue, either the combustion air fan or a recirculation fan can be used. If a recirculation fan is used then it is controlled in parallel with the combustion air fan.

The operation of a recirculation fan is controlled by either a differential pressure switch mounted across the fan or an absolute pressure switch mounted on the fan's positive pressure side.

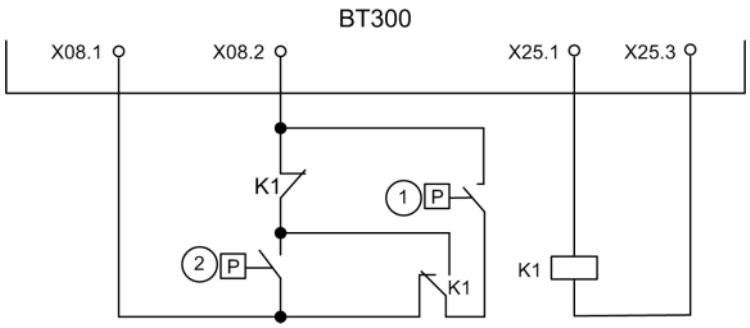

1 = Recirculation pressure monitor

2 = Air pressure monitor

Fig. 4-29 Interconnection of the pressure monitors

Negative pressure created by the combustion air fan can be used as an alternative to a recirculation fan to aspirate flue gases. For this method of flue gas recirculation it is sufficient to monitor the combustion air fan. It is not possible to use a VSD controlled recirculation fan with the BT300 system.

Program Sequence of BT300 with Flue Gas Recirculation

The action of the fuel and air actuators is not affected by the flue gas recirculation.
The recirculation damper stays closed at the beginning of the pre-purge period.
After the adjusted delay (P 414) the pre-purge period is stopped temporarily and the recirculation channel runs to OPEN position.
After the end of the pre-purge period the air damper runs to the ignition position. The fuel actuators are already in ignition position and the recirculation channel runs to CLOSE position.
After reaching this position, the burner ignites.
Only the fuel and air actuators run to the curve after the BT300 has changed to CONTROL mode.
The recirculation channel remains at its position until the release conditions were met.
Subsequently the recirculation channel runs to the curve.
The recirculation channel is only released once the time period set in P331 has expired and the release temperature P332 has been met.
If the temperature drops below the threshold set in P332 during operation the recirculation remains active.
The recirculation channel runs to the CLOSE position at a flue gas temperature of 0 °C (32 °F) – interruption of the temperature sensor.
During decommissioning the program sequence remains the same for fuel and air actuators.
The recirculation channel will be closed together with the fuel actuator.

NOTICE

LCM100 is always mandatory.

Terminals 29 and 30 must always be short-circuited at the LCM100 regardless of whether a temperature sensor is connected or not.

4.8 Actuator

4.8.1 Operation after Power ON/Long RESET

The actuators have internal position feedback using an incremental encoder. For automatic alignment of positioning the actuators run short of the 12 o'clock position by 2.8°. The actuators carry out a transposition test, if activated by P 461. After passing this test the actuators move to position for the closed damper.

4.8.2 Direction of Rotation/Position Damper Closed

For actuator 662R550... (0.8 Nm) direction of rotation of factory setting is clockwise in quadrant from 12 o'clock to 3 o'clock position (P 458 - P 460/channel 1 - channel 3). Adjust ’closed damper’ position between 12 o’clock and 3 o’clock position as follows:

- 12 o’clock position→ P 458 - P 460 = 0
- 3 o’clock position → P 458 - P 460 = 1

For actuator 662R5001...(1,2 Nm), 662R5003...(3 Nm) and 662R5009... (9 Nm) direction of rotation of factory setting is counter-clockwise in quadrant from the 12 o'clock to 9 o'clock position (P 458 - P 460/channel 1 - channel 3). Adjust ’closed damper’ position between 12 o’clock and 9 o’clock position as follows:

- 12 o’clock position → P 458 - P 460 = 0
- 9 o’clock position → P 458 - P 460 = 1

4.8.3 Detection of Actuators with Transposed Connections

While replacing BT300 make sure actuators are re-connected to the correct channel. Label the plugs/cables to prevent faults or use the ’transposition test’ in BT300 (parameter 461 = 1).

To detect transposition of actuators you must implement certain features into burner design.

- The actuator on channel 1 requires a mechanical stop at an angle of 94° (+- 2°).
- The actuator on channel 2 requires a mechanical stop at an angle of 104° (+- 2°).
- The actuator on channel 3 does not need a mechanical stop.

After a long RESET (e.g. after BT300 is switched on), all actuators automatically align position detection.

Next, channel 1 will not be moved, channel 2 moves on 99° further from 12 o'clock position and channel 3 moves 108.5° in a clockwise direction.

If actuators are connected to correct channel, none of the actuators will be blocked.

If two actuators are transposed, one of the actuators is blocked and therefore does not reach its target position. This leads to an error message, and a burner start-up is prevented.

4.8.4 Adjusting of Actuators

The actuators 662R550... (0,8 Nm), 662R5001... (1,2 Nm), 662R5003... (3 Nm) and 662R5009... (9 Nm) differ in their control system. Therefore define in parameters 455 - 457 the actuator connected:

Value	Actuator
1	662R550..., 662R5001..., 662R5003...
2	662R5009...

⚠ CAUTION!

An incorrect value causes a failure alignment of positioning! (see chapter *4.8.1 Operation after Power ON/Long RESET*

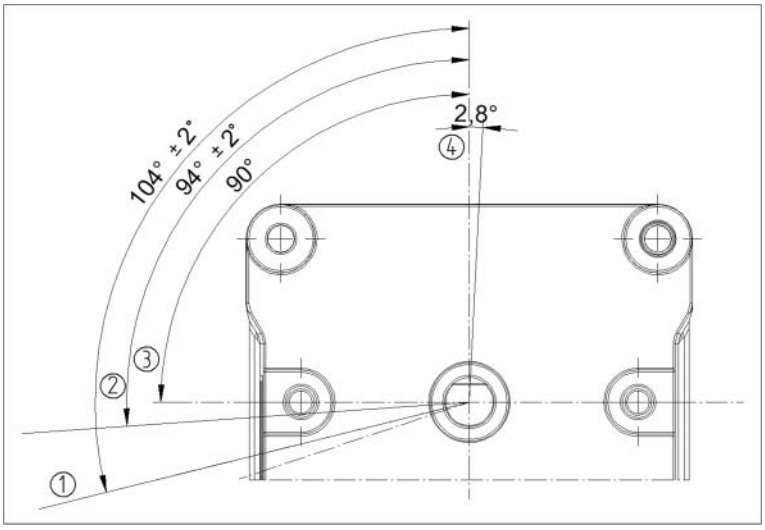

1 External, mechanical stop on channel 2 for detection of transposition

2 External, mechanical stop on channel 1 for detection of transposition

3 Operational range

4 Reference mark

Fig. 4-30 Actuators 662R5001..., 662R5003..., 662R5009

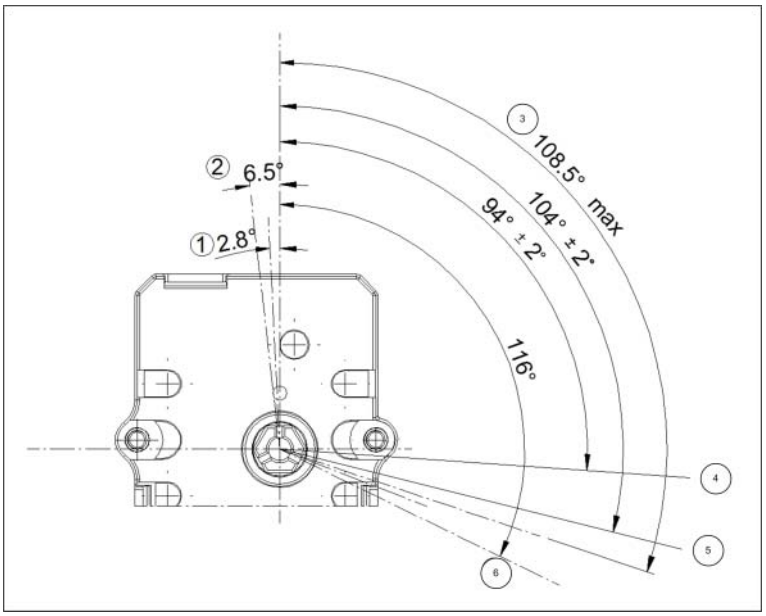

1 Reference mark

2 Internal mechanical stop

3 Max. angle of rotation for detection of transposition

4 External, mechanical stop on channel 1 for detection of transposition

5 External, mechanical stop on channel 2 for detection of transposition

6 Internal mechanical stop

Fig. 4-31 Actuators 662R550...

5 Operating Control and Displays

5.1 User Interface UI300

5.1.1 UI300 User Interface

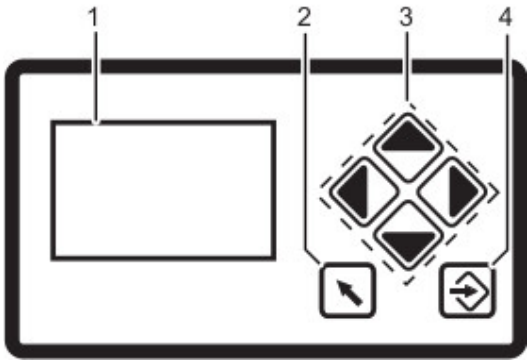

1 Display
2 BACK key
3 Cursor keys
4 ENTER key

Fig. 5-1 User Interface

Display

The display shows in pictogram:

- the menu structure
- operating status
- parameters
- error messages

Back key

Back to previous window.

Cursor keys

To navigate in the menu using cursor keys

Use ’left’ and ’right’ keys to move step by step in a selected row. At the end of the selected row the cursor jumps down to the next row, if possible.

In a multiline menu use ’up’ and ’down’ keys to switch to other rows.

To display parameters, switch between various fields.

ENTER keys

Press ENTER to call up a menu on the start screen. Select a sub-menu in the menu window. Transfer setting values by pressing ENTER key in a parameter window.

Use a flushing, red ENTER key to release a fault interlocker.

If the ENTER key is permanently lit red, a fault with an automatic restart is displayed.

5.1.2 Menu Functions

The menu is divided into five paths:

 INFO

 MANUAL

 SETTINGS

 DATA PROCESSING (release level 1 is mandatory)

INFO



Select INFO path for information about the following:

- Burner
- Faults/Fault history
- Software version
- Display of check sums
- Serial number
- Actuator positions (current damper position for each channel)
- Digital inputs/outputs

MANUAL



Select MANUAL to:

- Start and stop burner by hand
- Adjust internal burner firing rate

SETTINGS



Select the SETTINGS path for getting information/make changes to:

- Password
- Burner settings (display and settings)
- Actuator elements settings (display)
- Air/fuel control system
- Deletion of curve sets
- Display settings

DATA PROCESSING



Use DATA PROCESSING to:

- Read out datasets from the BT300
- To transfer datasets to the BT300

5.1.3 Main Menu

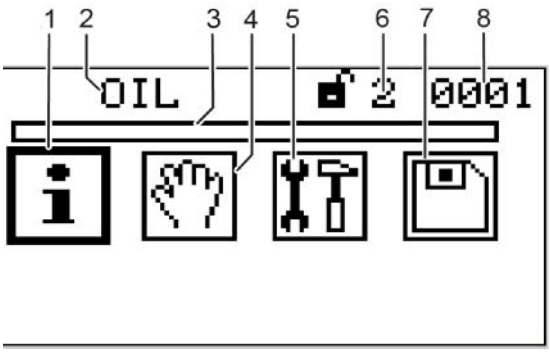

1 INFORMATION menu path [selected]
2 Display of fuel type
3 Bar graph of internal firing rate in % (0 - 100)
4 MANUAL menu path
5 SETTINGS menu path
6 Release level
7 DATA HANDLING menu path*
8 Window number

Fig. 5-2 Main menu

* Excess level 1 is mandatory

For a complete description of the display symbols, see chapter *10.1 Display Symbols*

5.1.4 Information Menu Path

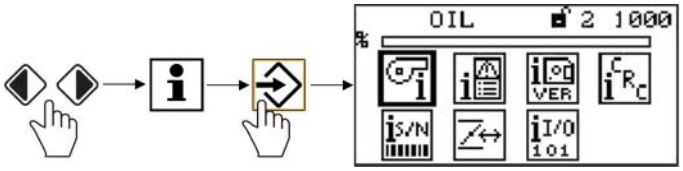

Burner information
Fault history
Software version
Check sum
Serial number
Configuration of actual value of actuating outputs (display only)
Digital inputs/ outputs

5.1.4.1 Burner Details

Displaying Operating Hours and Burner Starts

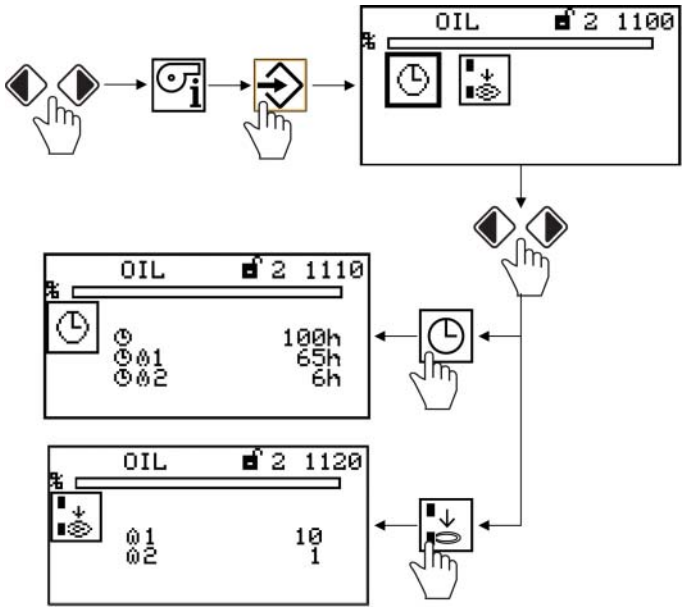

Display of operating hours		Number of operating hours in total (device connected with mains)
		Number of operating hours in oil operation
		Number of operating hours in gas operation
Display of burner starts		Number of burner starts in oil operation
		Number of burner starts in gas operation

5.1.4.2 Recalling Fault History

Displaying Burner Faults

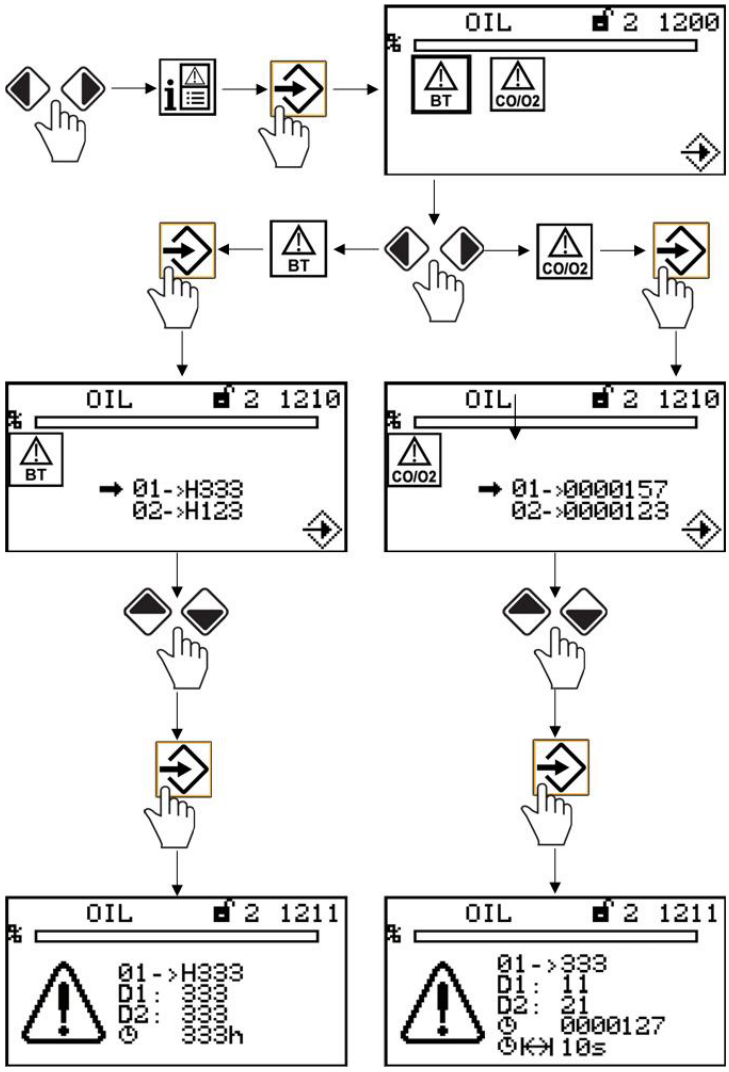

01 02	Fault code (Last 10 faults are stored, no. 01 is the latest fault)		No. of operating hours when fault has occurred
D1	Diagnostic code 1		Duration of the fault
D2	Diagnostic code 2		

NOTICE

Information concerning fault and diagnostic codes can be found in the list of fault codes. For fault analysis a fault code and diagnostic code D1 or D2 is required.

Fault unlock

How to unlock BT300

✓ A fault is pending and the ENTER key is flashing.

1. Press ENTER key.
   BT300 is not locked anymore.

Changing from fault unlock to main menu:

✓ A fault is pending and the ENTER key is flashing

1. Press BACK key.
   ENTER key isn't flashing any more.
   The display returns to main menu.
   An error number is flashing in the display on top, left hand.

UI300 can be used as usual.

Back to fault unlock

✓ An error number is flashing in the display on top, left hand.

1. Use BACK key to switch back to main menu.
2. Press arrow-key left.
   ENTER key is flashing again.

BT300 can be unlocked.

NOTICE

A permanent red light on the ENER key indicates gas shortage. A countdown is running to the next start. This countdown can be interrupted by the ENTER key.

5.1.4.3 Software Version

Display software version

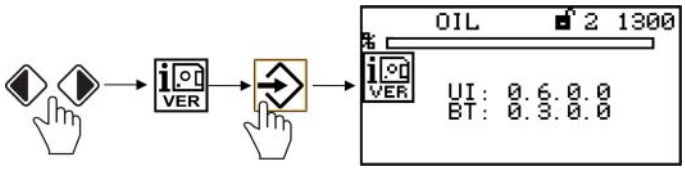

UI = Software version UI300
BT = Software version BT300

5.1.4.4 Display of Check Sums

Displaying Check Sums

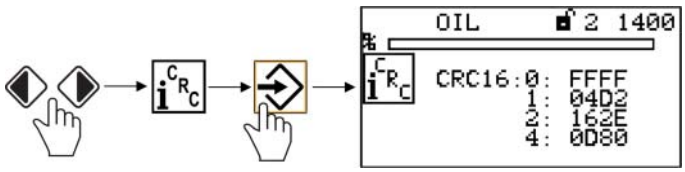

0 ... 4 = Check sum, access levels 0 ... 4

The checksums are generated from the device parameters. The BT300 calculates one checksum for the parameters of each access level (0, 1, 2 or 4). The UI300 indicates the checksums in hexadecimal code.

The checksum shows whether the value of one or more parameters have been changed.

5.1.4.5 Serial Number

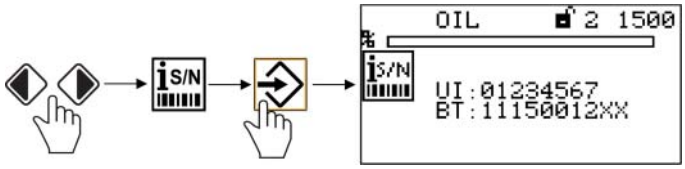

UI = Serial numberUI300
BT = Serial number BT300

5.1.4.6 Positions of Actuators

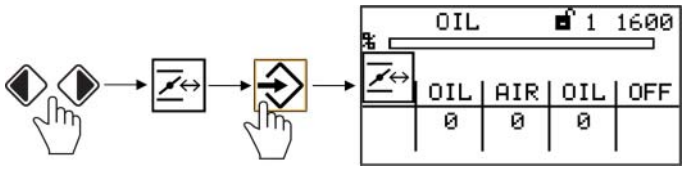

Indication of the channel's actual (left to right):
Channel 1 (oil)
Channel 2 (air)
Channel 3 (oil)
Optional channel (OFF; control of the frequency inverter)

NOTICE

The assignment of channels is depending on configuration settings!

5.1.4.7 Check Digital Inputs/Outputs

Check Digital Inputs and Outputs

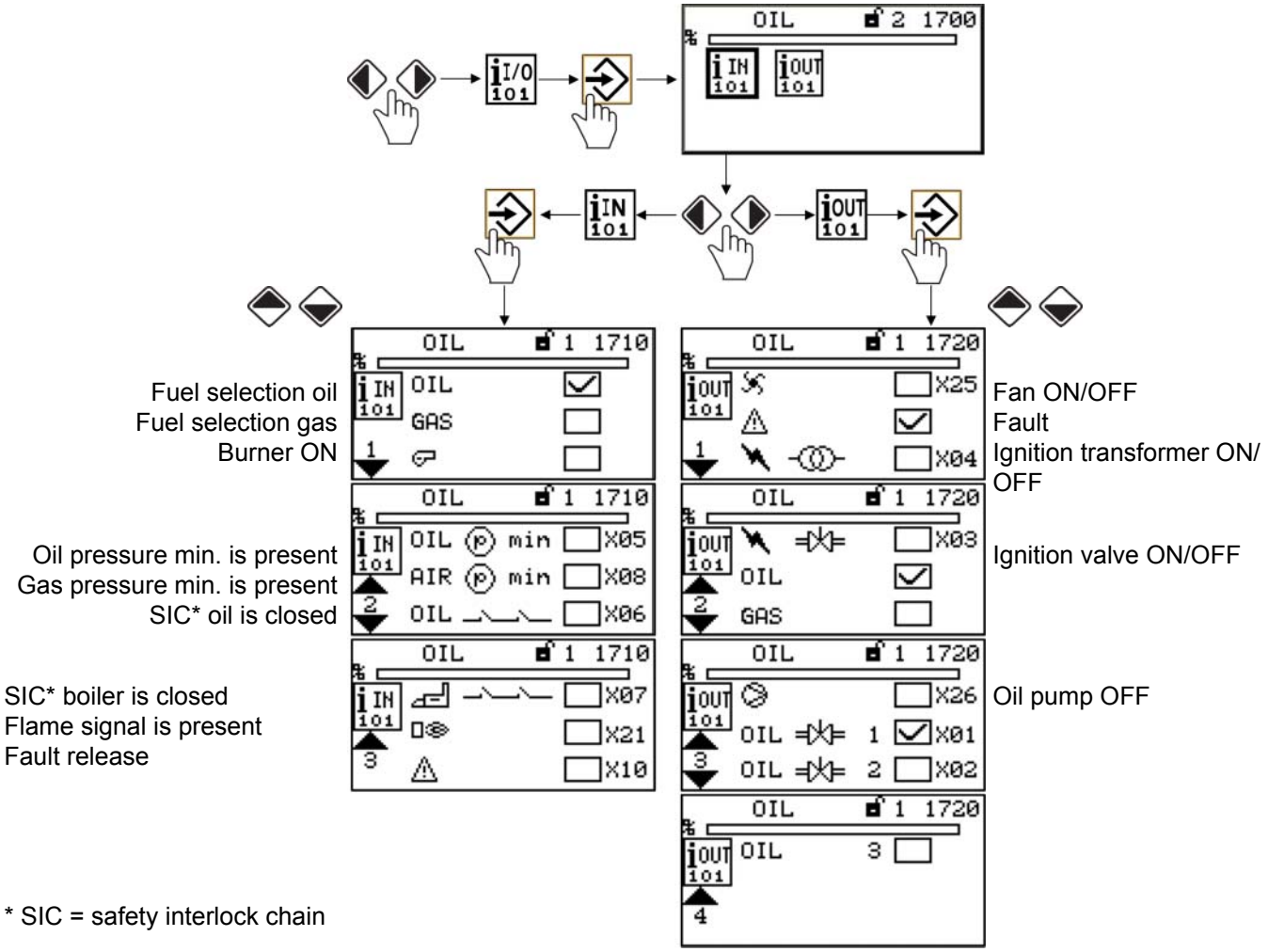

NOTICE

The signals 'Fuel selection oil' and 'Fuel selection gas' are logical and not physical signals.

Background: Some signals have more sources than one (terminals, LSB, field buses, parameters).

5.1.5 Manual Menu Path

MANUAL

Select MANUAL path to carry out actions as follows:

1 Switching burner ON and OFF

2 Presetting of burner firing rate

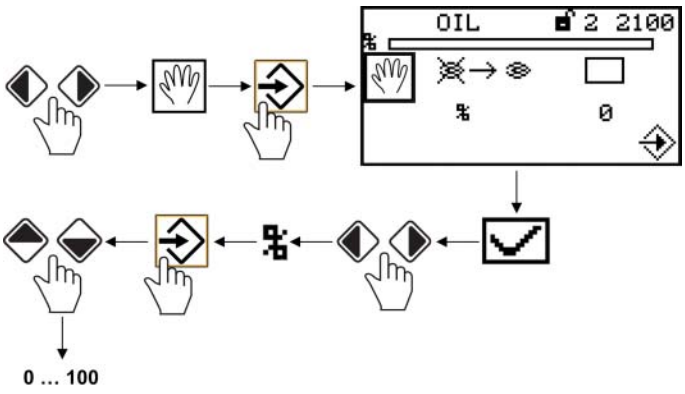

Start burner manually

Adjust burner firing rate

NOTICE

At least release level1 is mandatory to start the burner.

The 'Burner ON' control loop does not need to be switched on to start the burner from this menu. The user interface assumes control in this menu.

If there is no 'Burner ON' signal from other sources (terminal X10.2) software switches off the burner when you exit the menu.

⚠ CAUTION!

If you carry out a manual start-up via display BT300 no longer responds to 'Burner ON' signal input at connector X10.2. Therefore that limiters, monitors and other similar safety functions must not be operated with this input!

NOTICE

Leaving of window will terminate manual burner operation!

Adjust burner firing rate

1. Use cursor keys to select adjustment of burner firing rate in % and press ENTER to confirm.
2. Change burner firing rate with the cursor keys and press ENTER to confirm.

NOTICE

Changes of burner firing rate are possible only while burner is running.

If you want to adjust burner firing rate remember to start-up the burner first.

5.1.6 Fault Indication

Displaying Burner Faults

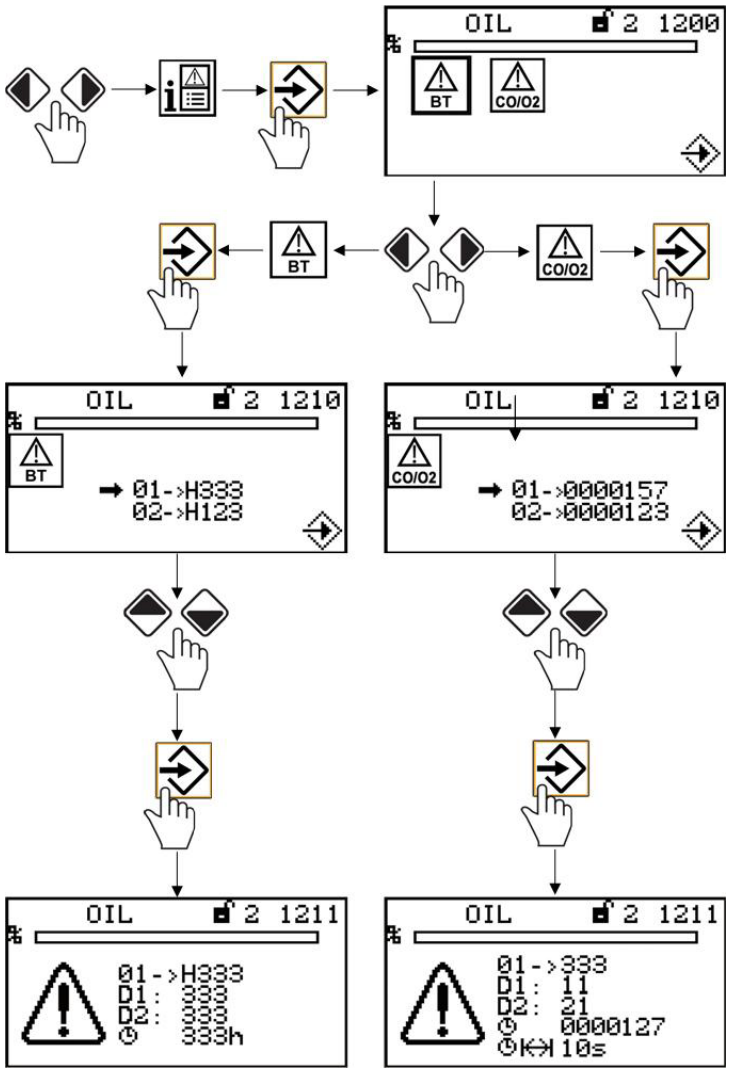

01 02	Fault code (Last 10 faults are stored, no. 01 is the latest fault)		No. of operating hours when fault has occurred
D1	Diagnostic code 1		Duration of the fault
D2	Diagnostic code 2		

NOTICE

Information concerning fault and diagnostic codes can be found in the list of fault codes. For fault analysis a fault code and diagnostic code D1 or D2 is required.

Fault unlock

How to unlock BT300

✓ A fault is pending and the ENTER key is flashing.

1. Press ENTER key.
   BT300 is not locked anymore.

Changing from fault unlock to main menu:

✓ A fault is pending and the ENTER key is flashing

1. Press BACK key.
   ENTER key isn't flashing any more.
   The display returns to main menu.
   An error number is flashing in the display on top, left hand.

UI300 can be used as usual.

Back to fault unlock

✓ An error number is flashing in the display on top, left hand.

1. Use BACK key to switch back to main menu.
2. Press arrow-key left.
   ENTER key is flashing again.

BT300 can be unlocked.

NOTICE

A permanent red light on the ENER key indicates gas shortage. A countdown is running to the next start. This countdown can be interrupted by the ENTER key.

5.1.7 Settings Menu Path

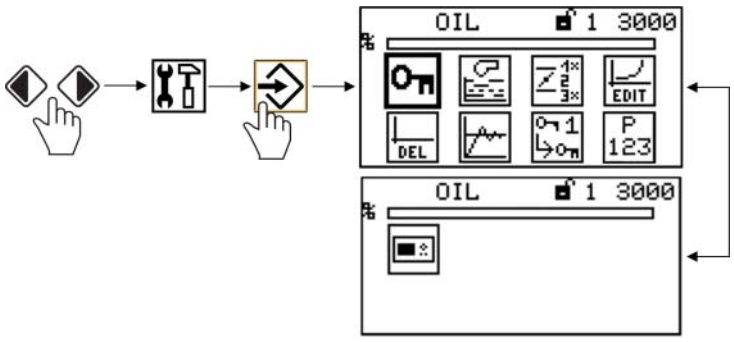

Password
Display program sequence settings
Read actuator configuration
Curve settings
Delete curve
Controller settings
Password settings
Parameter settings
Display sttings

5.1.7.1 Password

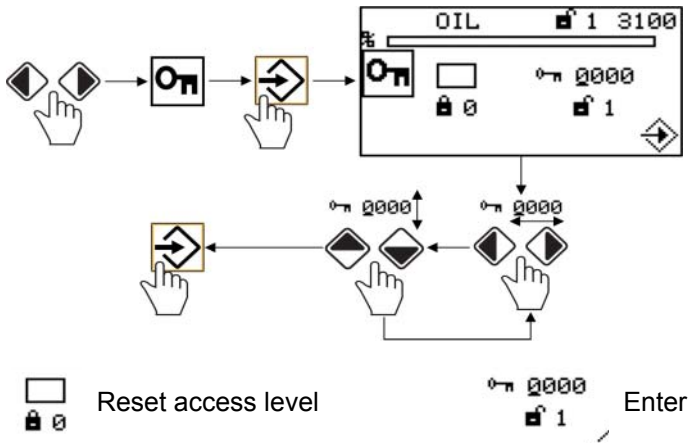

Reset access level

Enter password to get access level

5.1.7.2 Program Sequence

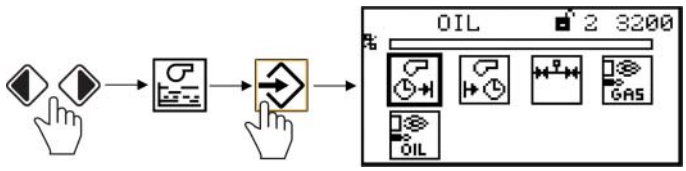

Duration pre-purge period

Duration post purge period

valve leakage test

Pilot burner gas operation

Pilot burner oil operation

Set duration of pre-purge period

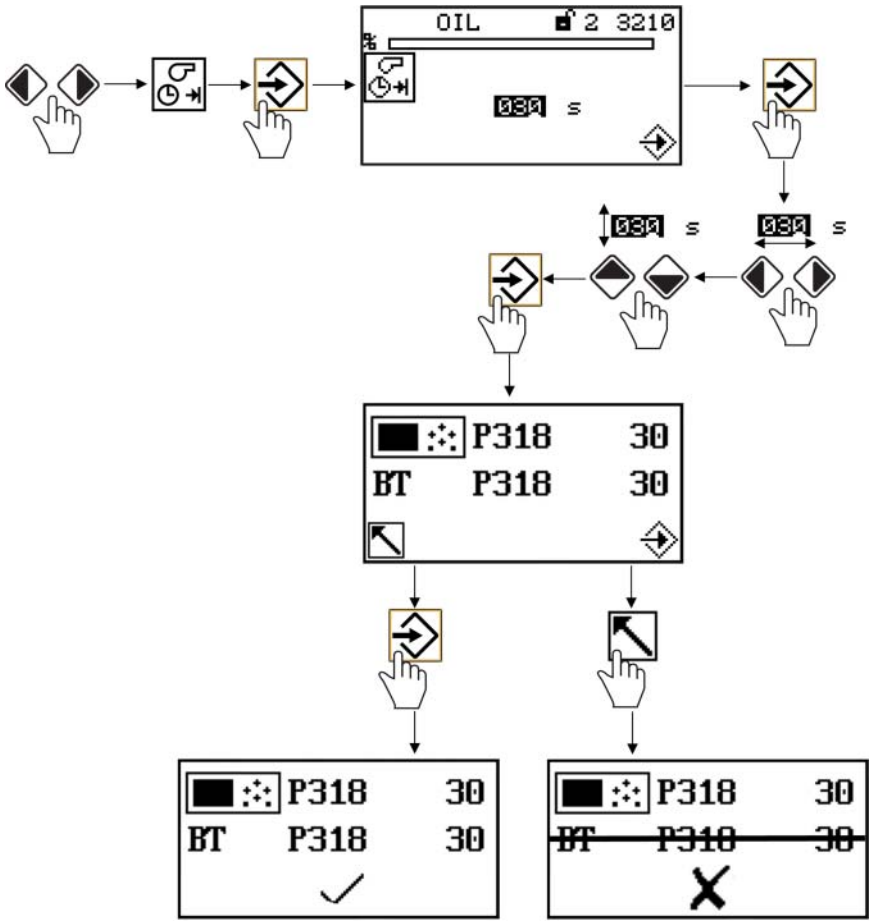

Parameter number UI

BT = Parameter number BT300

Parameter modifications are transferred

Parameter modifications are discarded

NOTICE

Both values are identical – Confirm with .

The values are different – Cancel with .

NOTICE

Pre-purge starts as soon as damper reaches pre-purge position and - if you use a VSM - the last but one point of fuel/air ratio curve is passed.

NOTICE

The second to last channel's position must be lower than the position of the last curve point.

Set duration of the post-purge

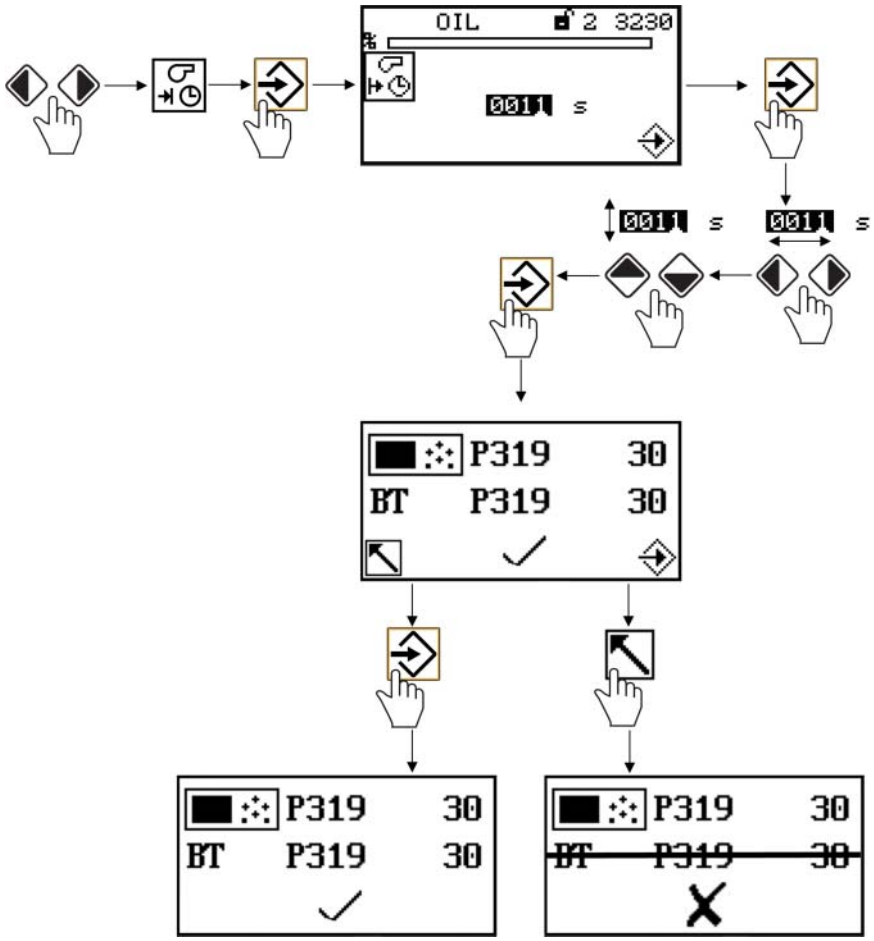

NOTICE

Both values are identical – Confirm with .

The values are different – Cancel with .

Valve Leakage Test

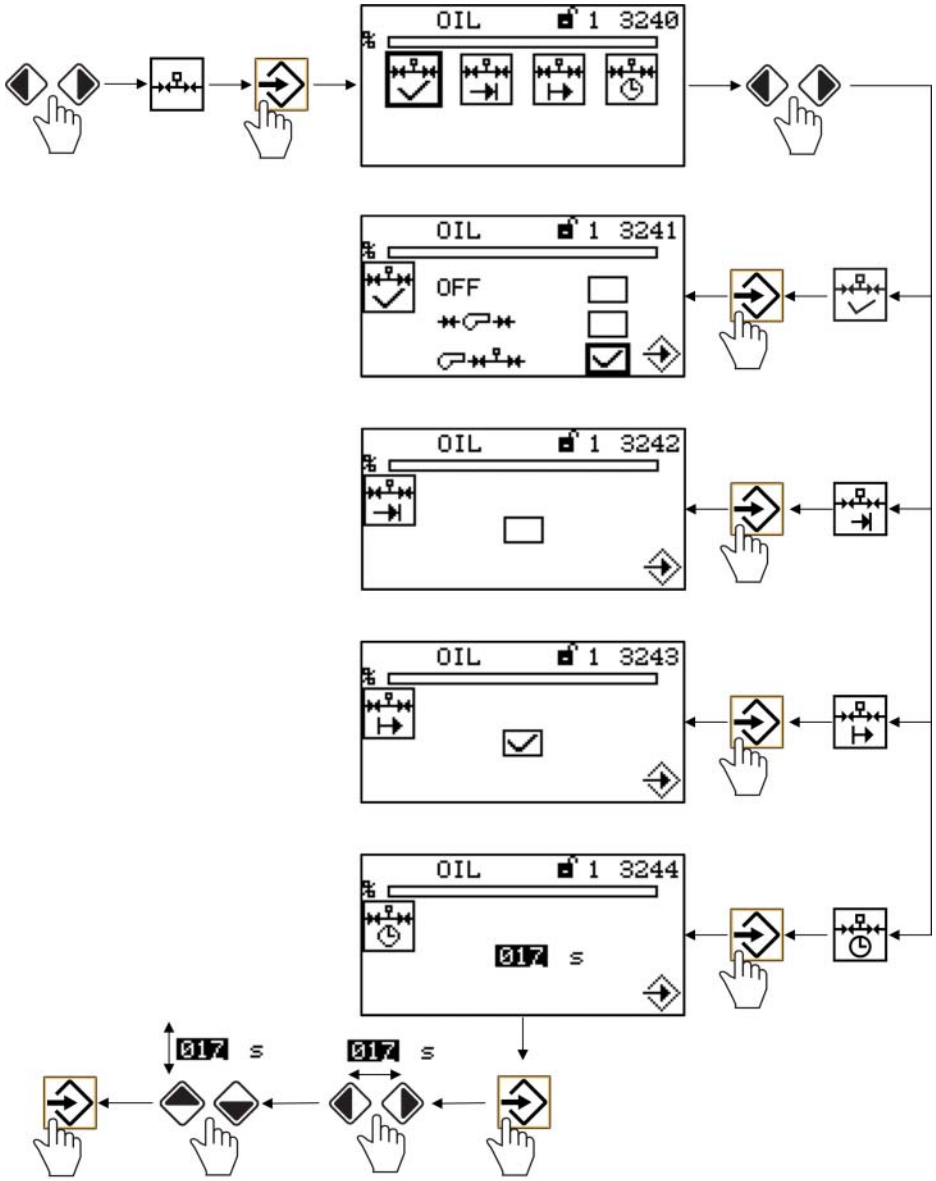

Valve leakage test ON/OFF P802

OFF P802 = 0 = Valve leakage test OFF

P802 = 1 = If valve leakage test before ignition is configured, the test runs during ignition.

P802 = 2 = If valve leakage test before ignition is configured, the test runs after pre-purge.

Valve leakage test before ignition P312

Valve leakage test after burner OFF P315

Duration of Valve leakage test P311

Activate pilot burner in gas operation

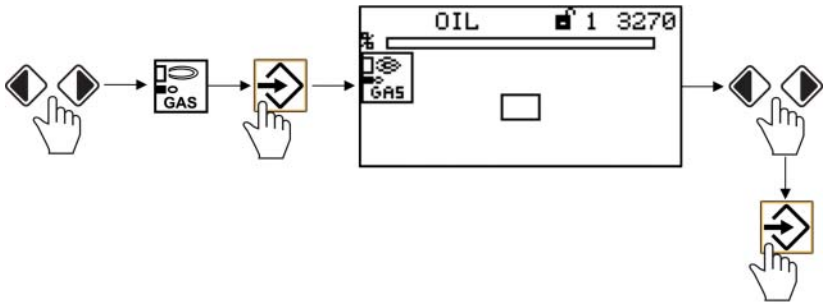

☑ Pilot burner ON
☐ Pilot burner OFF

Activate pilot burner in oil operation

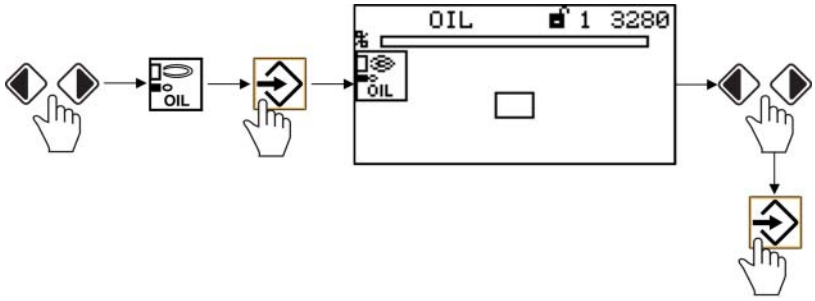

☑ Pilot burner ON
☐ Pilot burner OFF

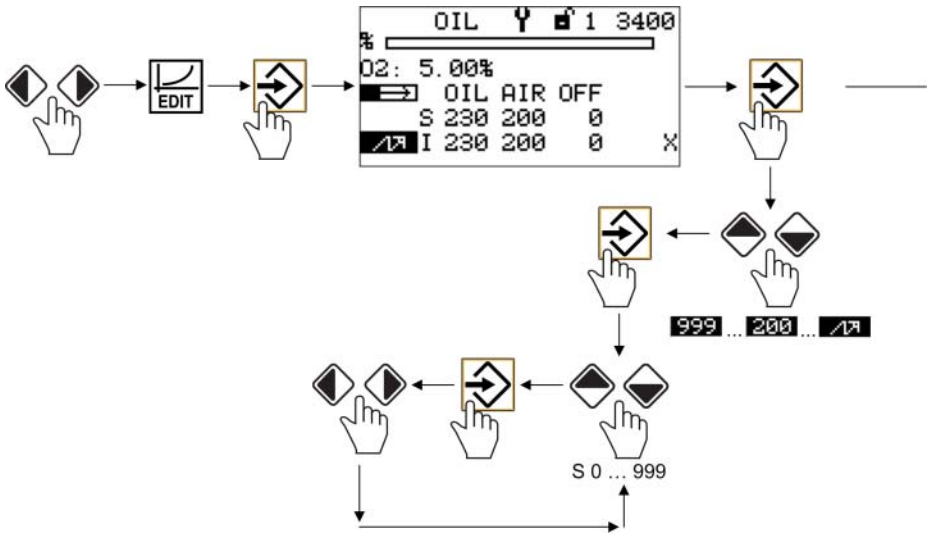

	Ignition point
999	Firing rate points 200, 250, 300, 400, 500, 600, 700, 800, 900, 999
S 0 ... 999	Setpoint value (to adjust)
I 0 ... 999	Actual value

NOTICE

Actuators move according to changes immediately to the set position.

If you want to change channel 4 the fan motor must be running.

NOTICE

The following firing rate points are available:
Ignition point , 200, 250, 300, 400, 500, 600, 700, 800, 900, 999

Use BACK key to switch to menu settings after having completed curve settings.

NOTICE

Pressing while setting firing rate points discards the modifications.

Set Multi Stage Operation

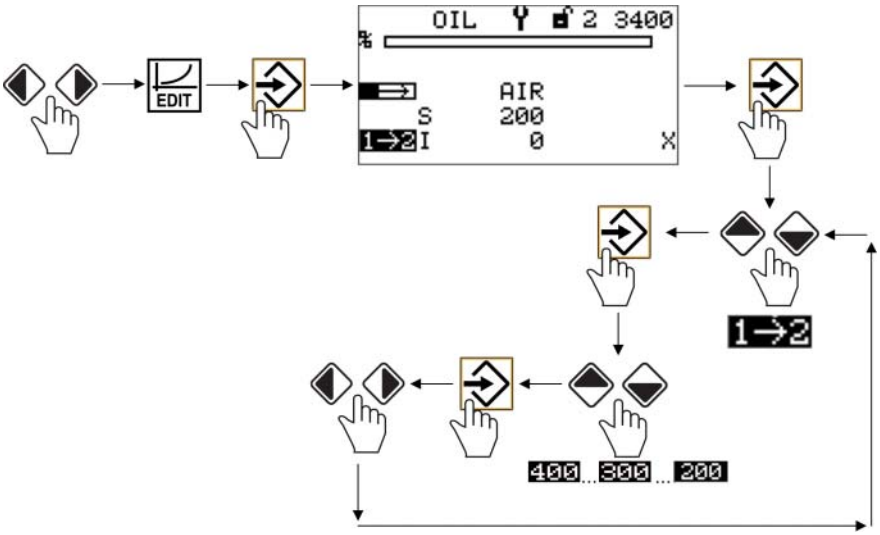

AIR	Air channel	1→2	Switching from 1. stage to 2. stage
S	Setpoint position of air damper	200	The internal setpoint curve always has 200 digit in stage 1, 300 digit in stage 2 and 400 digit in stage 3.
I	Actual position of air damper		

NOTICE

Set the following stages according to this procedure!

NOTICE

Pressing die key while modifying the firing-rate points discards the changes.

NOTICE

The following points are available for multi stage operation:

Ignition point ,
1 (first stage),
1 → 2 (valve switch-on threshold for stage 2),
2 ← 1 (valve switch-off threshold for stage 2),
2 (second stage),
2 → 3 (valve switch-on threshold for stage 3)
3 ← 2 (valve switch-off threshold for stage 3) ,
3 (third stage)

NOTICE

The points are approached from above by using the overshoot-function. If you use the overshoot-function in operation, you must program all points from above. Only if you do so, the required position will match the actual position.

5.1.7.3 Configuration of the Actuators

Displaying the Actuators' Configuration

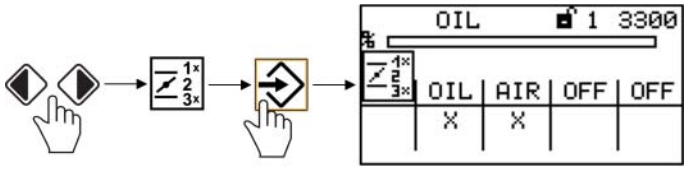

Channel 1 = **OIL** = oil
Channel 2 = **AIR** = air
Channel 3 = **OFF** = OFF
Channel 4 = **OFF** = OFF (optional channel)

5.1.7.4 Set Curve

How to set the actuator's curve sets

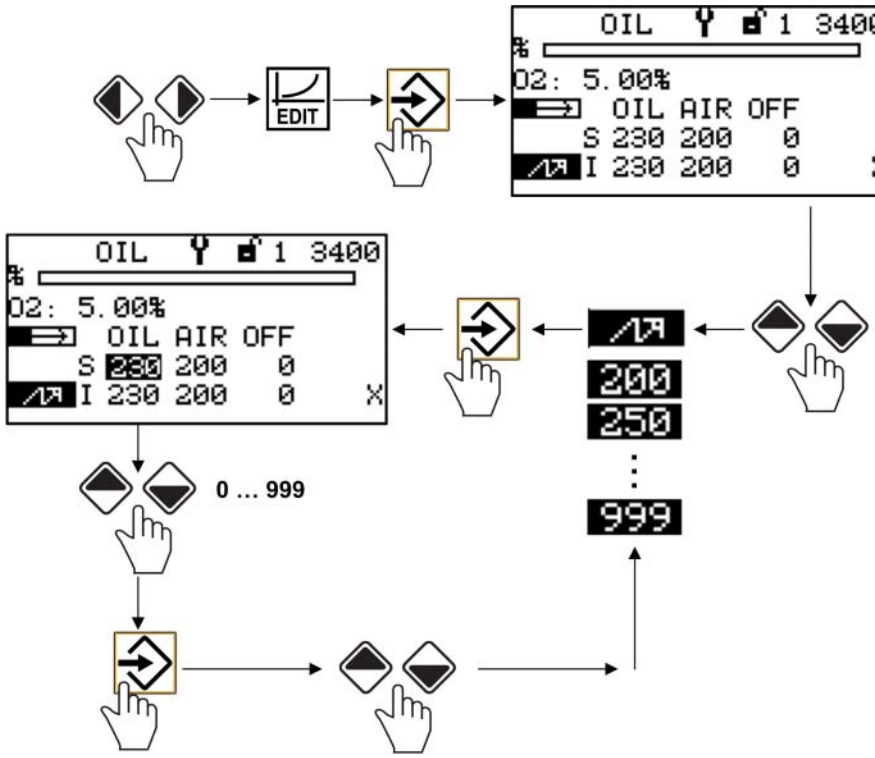

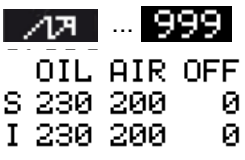

Firing rate point - from ignition position up to 999

S Setpoint value channels 1 ... 3
I Actual value channels 1 ... 3
(in this case: channel 1 = oil, channel 2 = air, channel 3 = OFF)
X curve data for this firing rate point are stored yet

NOTICE

The actuators are running to the new position immediately after the modification.

To adjust channel 4 the fan motor must be running. The feedback setpoint curve of channel 4 must rise continuously.

Pressing key BACK for longer than 2 s in menu 'Curve settings of the actuators' causes a fault shut down.

Pressing key BACK after finishing the curve settings leads back to menu ' Settings'

Pressing key BACK during changing the firing rate discards the modification.

NOTICE

The following firing rate points are available:
Ignition point , 200, 250, 300, 400, 500, 600, 700, 800, 900, 999

5.1.7.5 Deleting Curves

How to delete the firing rate curve

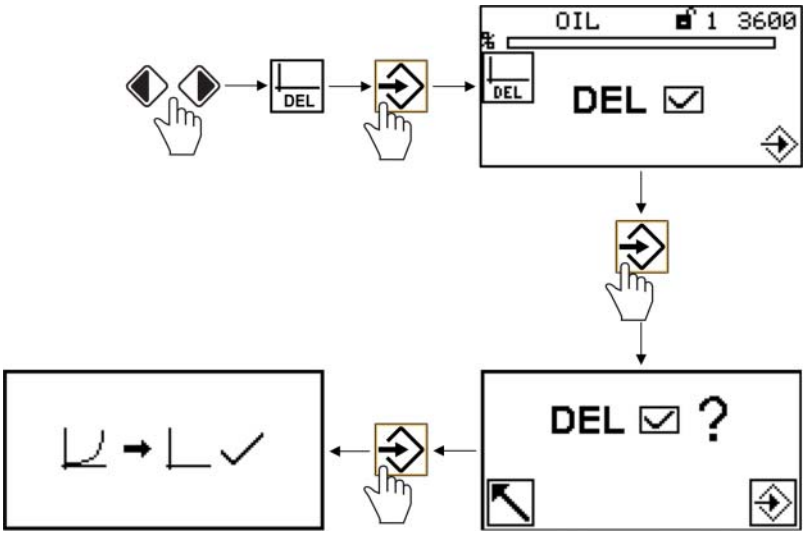

5.1.7.6 Adjusting Controller

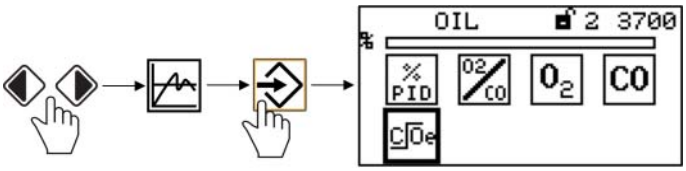

PID PID controller settings
CO/O_2 controller settings
O_2 O_2 trim settings
CO CO controller settings
Si-CarboSen settings

PID Controller Settings

- Modus
- Speed
- Physical units

CO/O_2 Controller Settings

- ON/OFF
- Correction mask
- Correction spreading

O_2 Trim Settings

- Correction range
- Testing O_2 trim
- O_2 curve settings
- Delete O_2 setpoint curve or optimisation curve
- Adjusting P term and dead time
- Adjusting the activer range of the O_2 trim

CO Controller Settings

- CO controller settings
- Correction range
- Testing CO correction
- CO edge
- Adjusting the activer range of the CO controller
- Deliting CO optimisation curve
- Si-CarboSen configuration

5.1.7.7 UI300 Settings

How to set the UI300's display

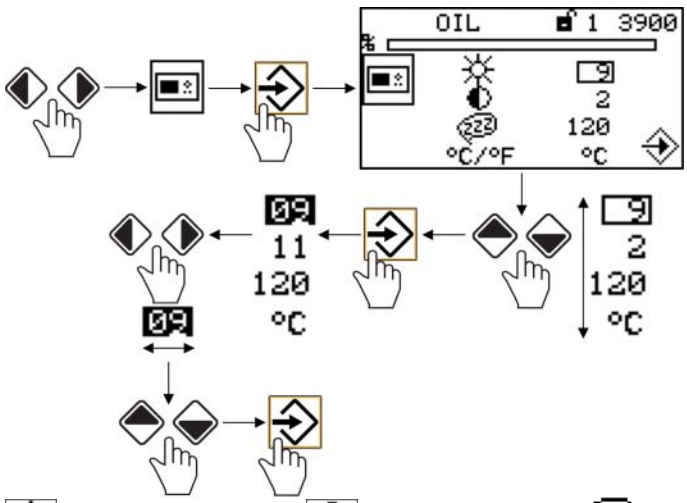

Adjust brightness. Adjust contrast Set waiting time for screen saver

NOTICE

The screen saver may not be set to 0!

5.1.7.8 Edit Parameter

Setting Parameters up to Release Level 2

NOTICE

Only parameters of the present release level can be modified.

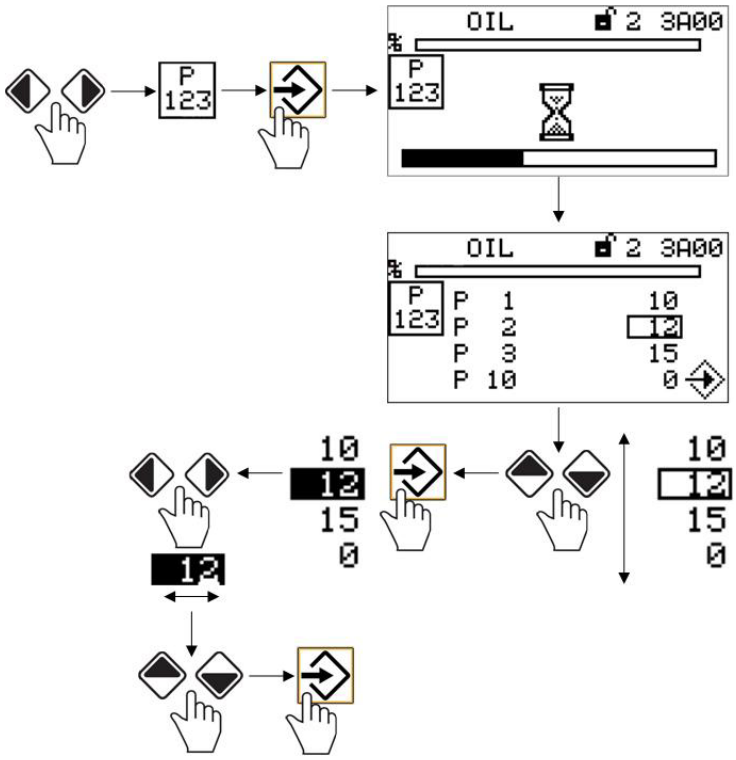

5.1.8 Menu Path Dataset Processing

Saving/Restoring BT300 Dataset

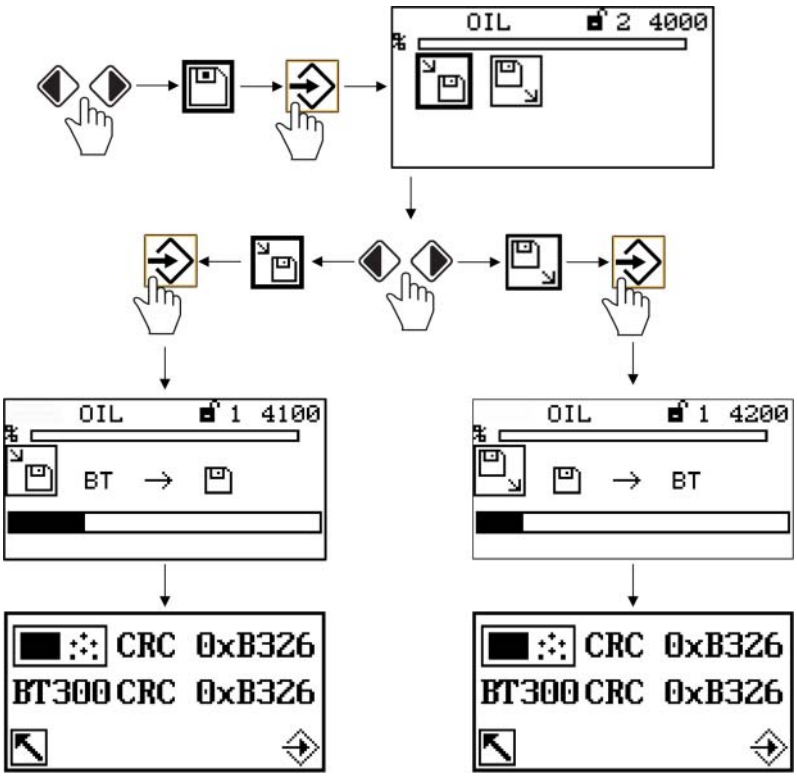

Saving dataset from BT300

Transfer dataset to BT300

NOTICE

Check the checksum for equality each time after saving the data:

Check the settings from chapter *2.4 Installation Notes* after transferring data to BT300:

5.2 Other Displays

No connection between UI300 and BT300

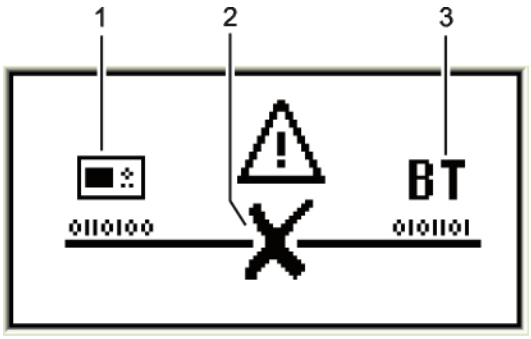

1 UI300 User Interface pictogram
2 No connection symbol
3 BT300 burner control

Fig. 5-3 No connection

Display shown e.g. when using LSB remote software and communication between BT300 and UI300 is temporarily unavailable.

Termination

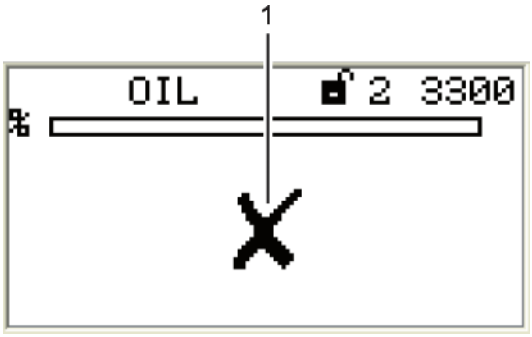

1 Communication error pictogram connection unavailable

Fig. 5-4 Termination

Error Mode

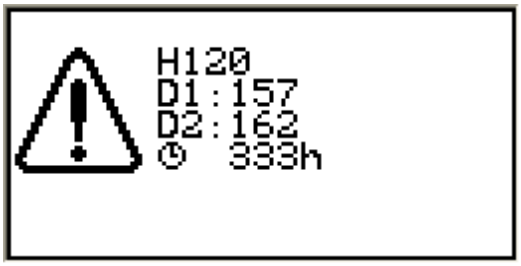

H120 Failure number
D1 Diagnostics 1
D2 Diagnostics 2
Failure occurs at that time

Fig. 5-5 BT300 ferror mode

CO/O2 Hint

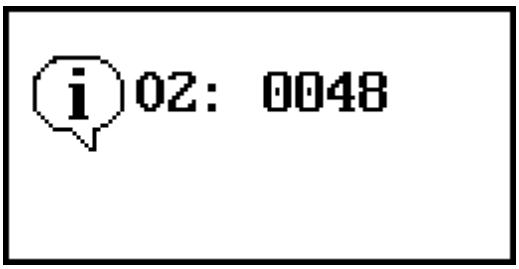

Number of the currently pending hint.

The hint can be released by the RESET button.

Fig. 5-6 CO/O_2 hint

CO Hingt



Number of the currently pending hint..

The hint can be released by the RESET button.

Fig. 5-7 CO hint

CO/O2 Fault

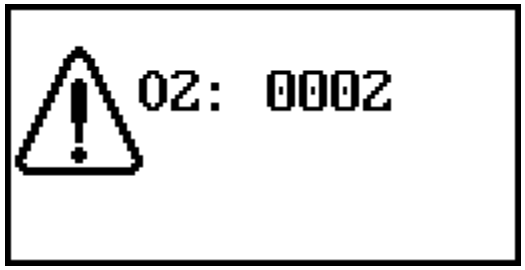

Number of the currently pending fault.

The fault can be released by the RESET button.

Fig. 5-8 CO/O_2 fault

CO Faultr

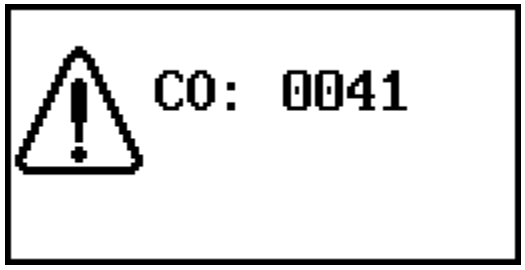

Number of the currently pending fault.

The fault can be released by the RESET button.

Fig. 5-9 CO fault

O_2/CO-Fehlerhistorie

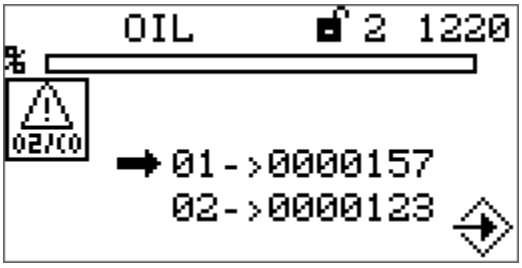

Fault history including the time when the fault occurs

Fig. 5-10 CO/O_2 fault history

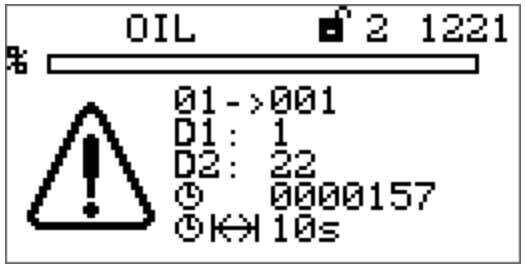

01 - 001		Fault number
D1		Diagnostics 1
D2		Diagnostics 2
		Fault occurs at that time
	|↔|	Duration of the fault

Fig. 5-11 Details of the fault history

5.3 LSB Remote Software

5.3.1 Functional Description, Connecting USB-CAN Module

5.3.1.1 Installation Prerequisites

Installation bundle



Fig. 5-12 Package contents

1 LSB Remote Software installation CD (1)

2 Cable for Mini-USB (2)

3 Gender Changer

4 LSA100

5 USB-CAN module including driver (min. V5.x) (4)
- included in delivery

System Requirements:

- PC with operating system Windows XP or later
- Administrator rights for the installation („Run as administrator“)
- Resolution of the display 1024 x 768 pixel

5.3.1.2 Install Software

The remote software visualises parameters and curve data of the end devices on LAMTEC SYSTEM BUS (LSB). Values are edited and saved.
A USB-CAN module connects the end device via LSB. For this purpose, install the driver for the USB-CAN module.

If connected via USB-CAN module, call up the current data for the end device. Using specific dialogues, allows to take a targeted approach changing individual parameters, deleting curves, or programming curve points.

The current status of the end device, which is determined by the settings for the parameters and curve data can be saved (backed-up) in a data set on the PC. Once backed-up, these data sets can then be restored later to reproduce a certain status in the BT300.

You will find a schematic diagram in chapter *4.1 System Overview*.

5.3.1.3 Install Software

Description of the Symbols

Click mouse button (left click)

Read

Fill out

Important

Installing the LSB Remote Software

1. Insert the disk and open the setup file "Setup_LSBRemote_vx.xx.exe".

   The language selection dialogue will appear.

   Here you have the possibility to select the language of the whole installation process. You can choose between German and English.

NOTICE

The language of the installation dialogue will depend on this setting.



Fig. 5-13 Select language

2. Select the language and confirm the selection with OK.

   The 'Software setup assistant' window opens.

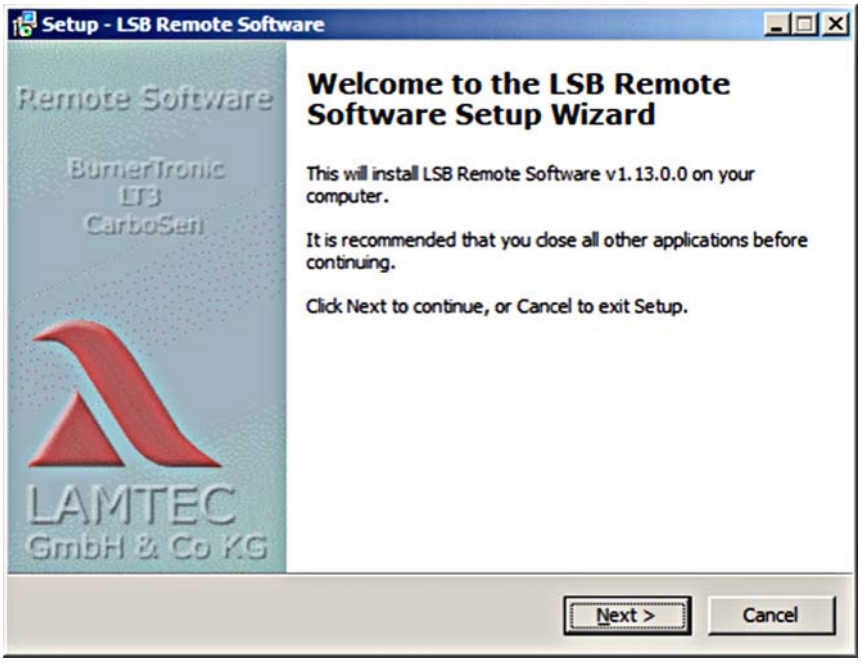

Fig. 5-14 Software setup assistant

3. Select 'Next'.

   The window to select destination folder opens.

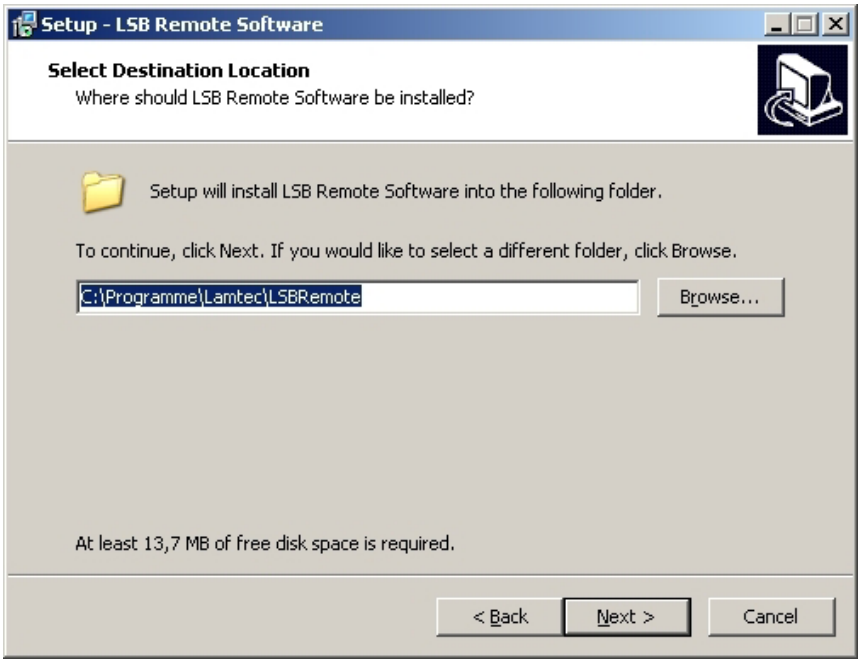

Fig. 5-15 Select destination folder

4. Specify the folder where the LSB Remote Software should be installed.

   A warning if the folder already exists is displayed.

5. Either answer 'Yes' to confirm this choice, or select 'No' to enter a different path in text box above (see *Fig. 5-15 Select destination folder*).

   The window for selecting start menu folder opens.

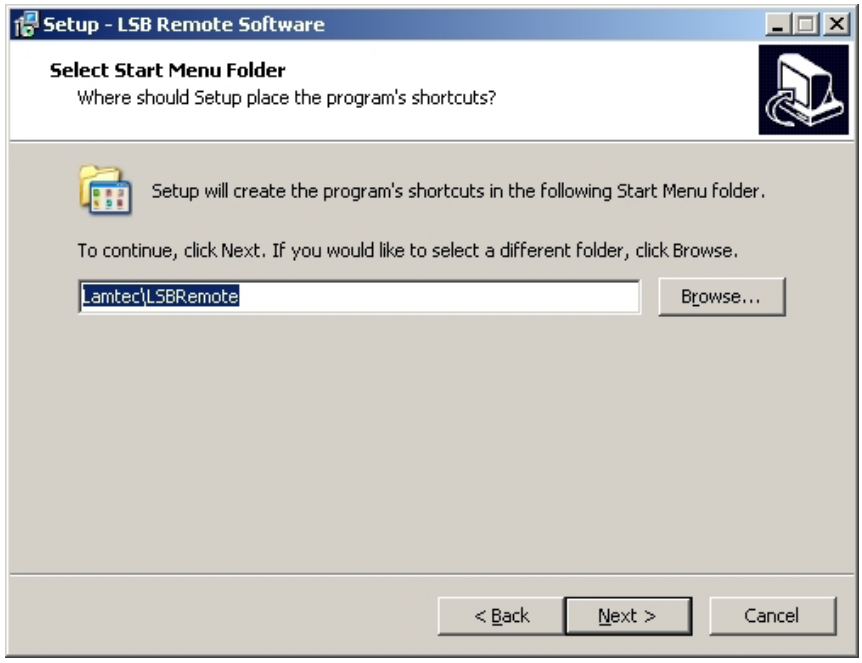

Fig. 5-16 Select start menu folder

6. To proceed, select 'Next'
7. Create a program short cut.
   a) Check the box to launch an icon for the application on the desktop.

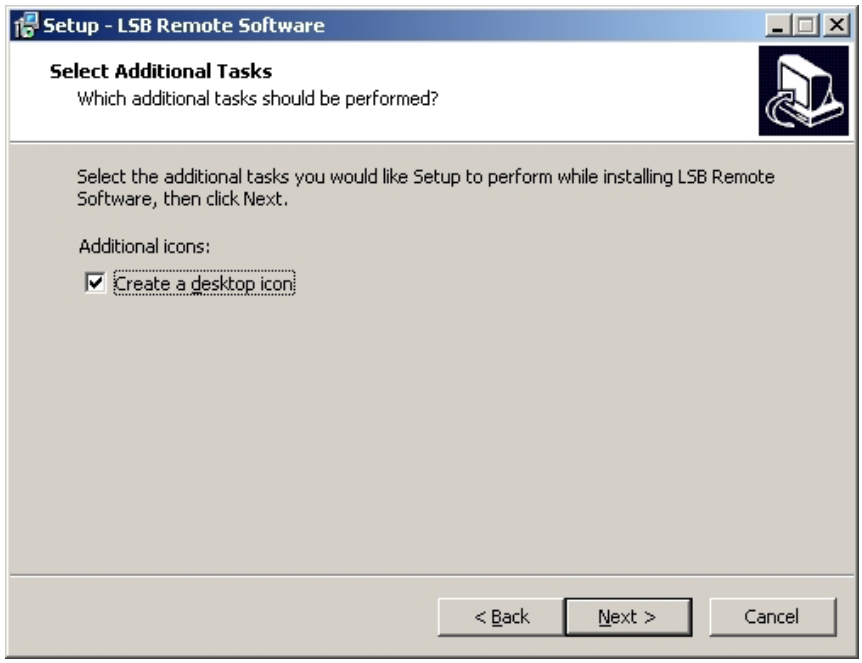

Fig. 5-17 Create a desktop icon

8. "Next" to continue, "Cancel" to exit.
9. USB-CAN driver installation option. A special driver for the USB-CAN module is necessary. It is recommended to check the box "Install USB-CAN driver?" in order to install the driver along with the LSB Remote Software

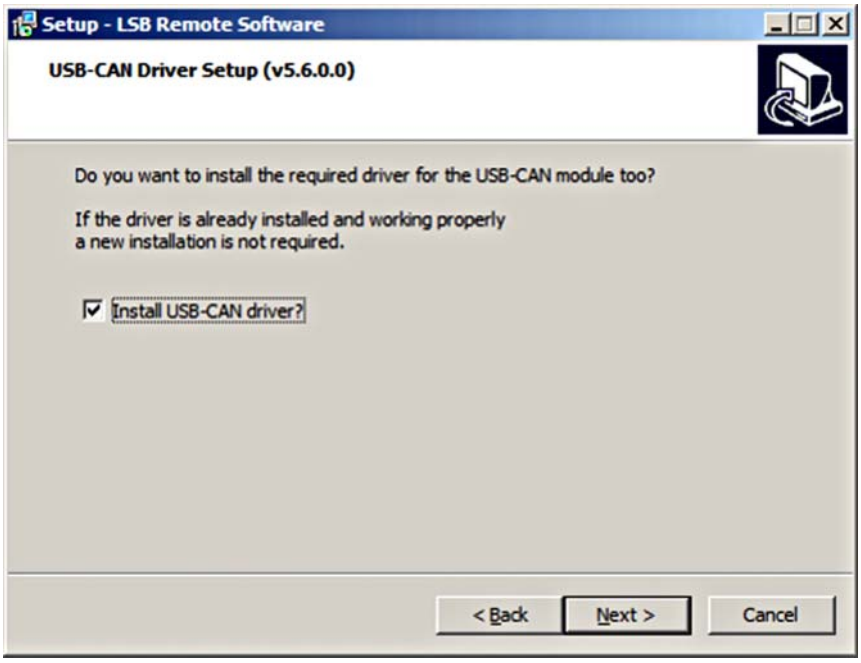

Fig. 5-18 Select USB-CAN drivers

10. "Next" to continue, "Cancel" to exit.

NOTICE

Do not connect an USB-CAN converter to the computer during installation of the USB-CAN driver!

11. Click on “Install“ to start the installation. Otherwise select "Cancel" to cancel the installation.

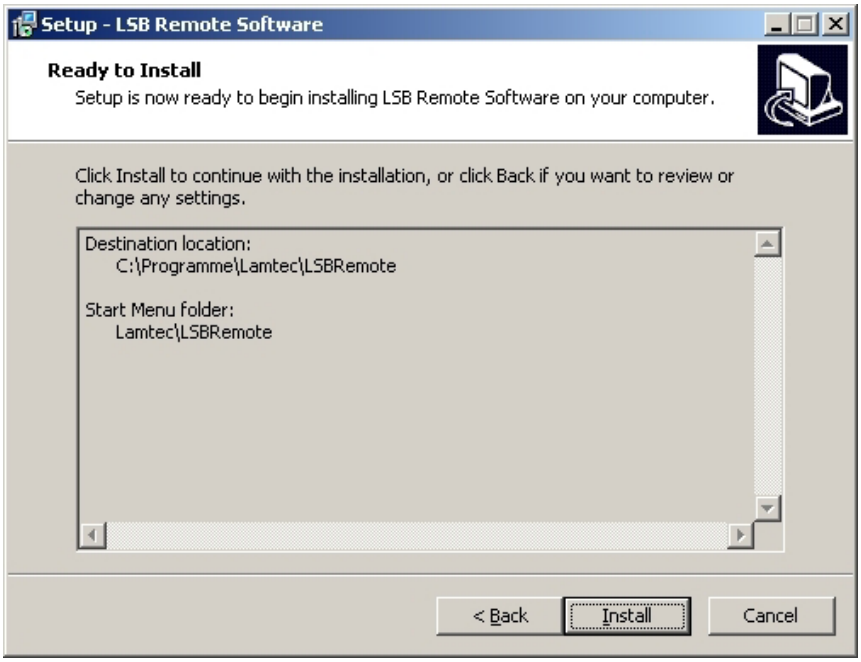

Fig. 5-19 Start installation

The installation starts.

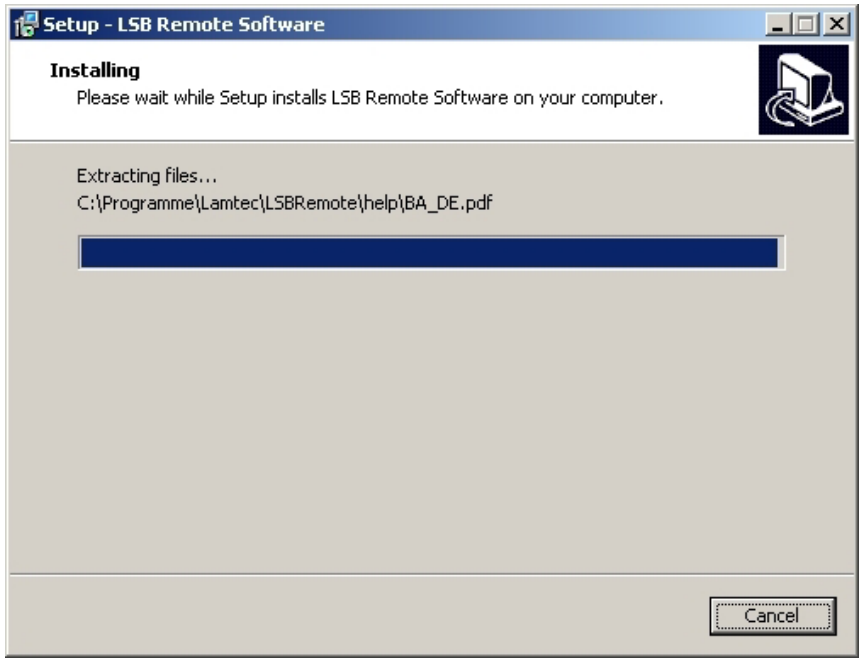

Fig. 5-20 Installation in progress

The progress bar shows installation process.

NOTICE

As soon as the bar fills up the USB-CAN driver setup starts.
Do not connect a USB-CAN converter to the computer during installation of the USB-CAN driver!

12. If an old version of the driver already exists on the computer, it is recommended to uninstall it beforehand. When the following prompt appears confirm by clicking “Yes”

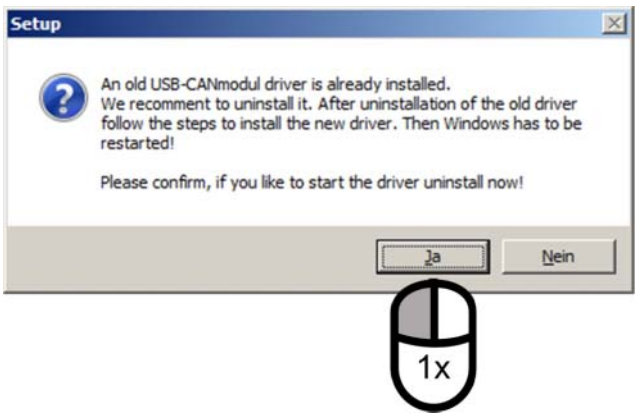

Fig. 5-21 Uninstall existing driver

13. After uninstalling the old driver, the setup for the new driver starts.

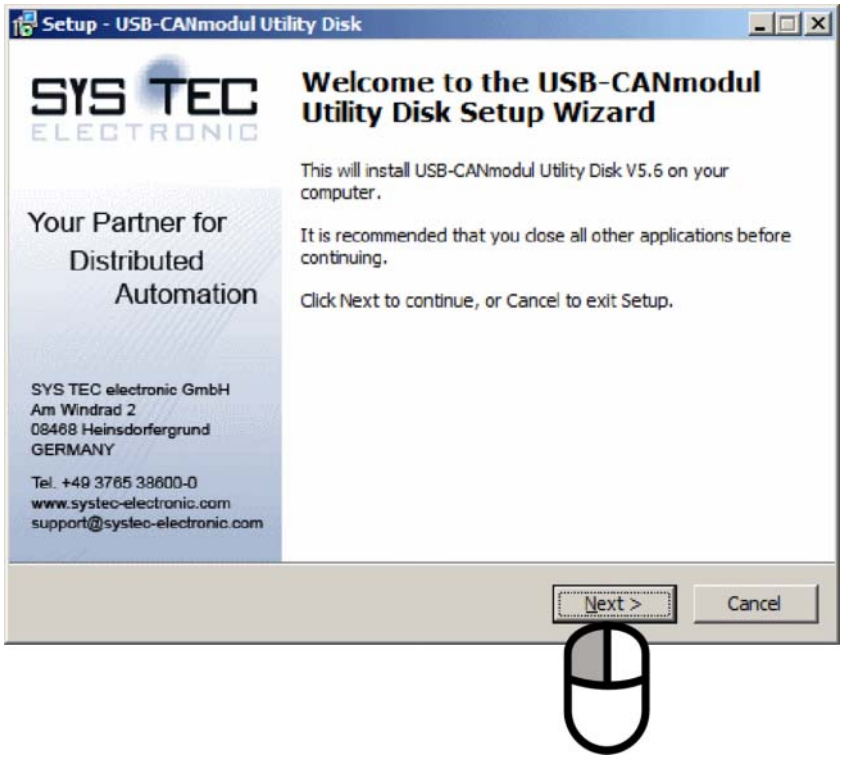

Fig. 5-22 Start window of the USB-CAN driver installation

Select 'Next' to start installation.

14. Read and accept the license agreement. Then proceed by clicking "Next". (The 'Next' button will be active after accepting the license agreement.



Fig. 5-23 License agreement

Installation is completed. The application can be started.

15. Read the information in the following window, and make sure that to follow the instructions.

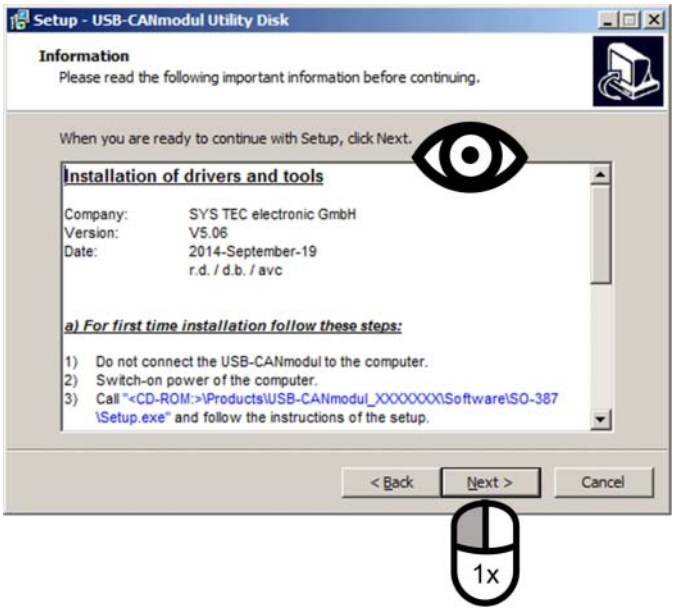

Fig. 5-24 Preparing USB-CAN-driver installation

"Next" to continue, "Cancel" to exit.

16. Fill out the fields in the following window

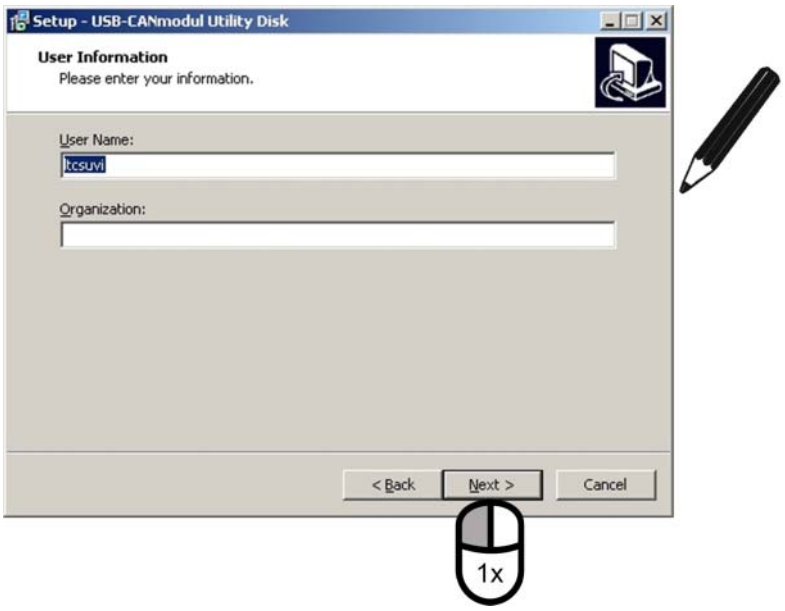

Fig. 5-25 User information

"Next" to continue, "Cancel" to exit.

17. Select installation folder for installation of USB-CAN-driver.



Fig. 5-26 Selection of the installation folder

"Next" to continue, "Cancel" to exit.

18. Read following information carefully and answer question with ’YES’.

NOTICE

It is important that you read the information window thoroughly and fully understand its contents.

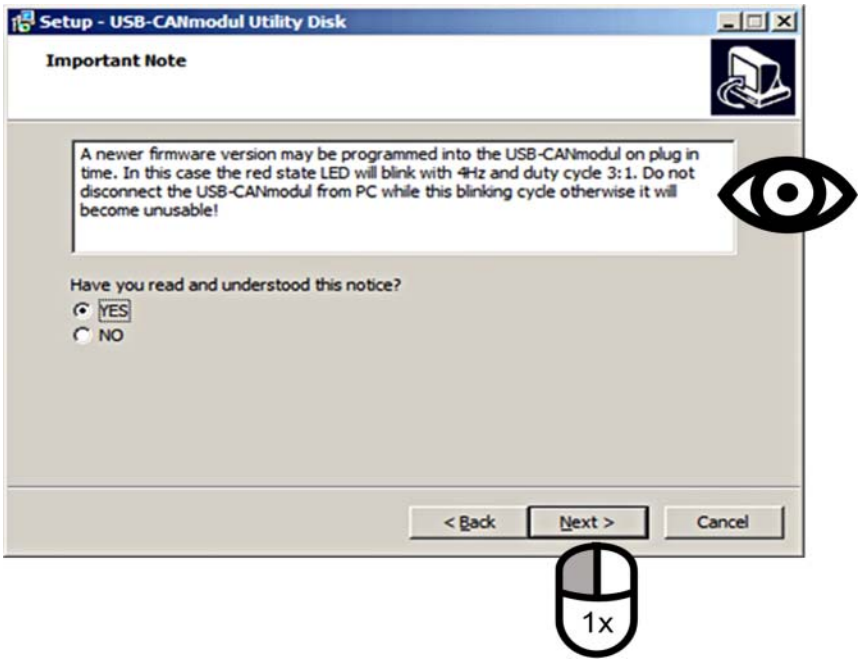

Fig. 5-27 Information window

"Next" to continue, "Cancel" to exit.

19. Select components to install. Make sure that,"Program Files" and "Driver Files" are selected.

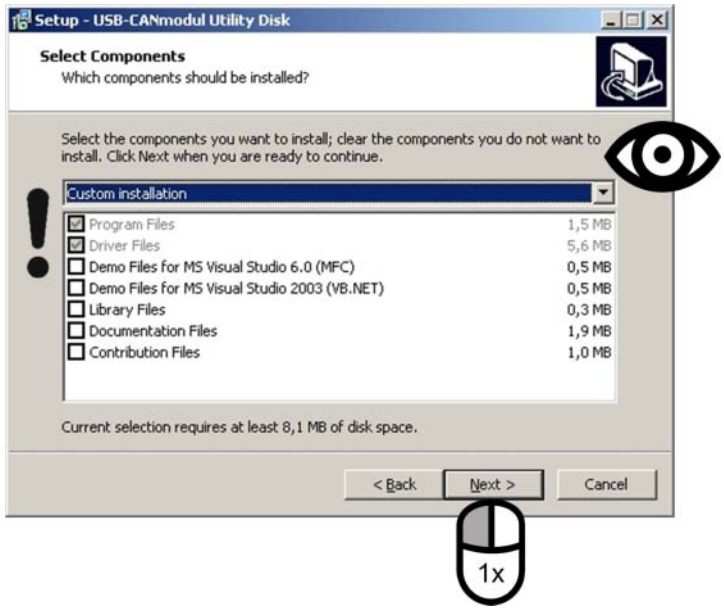

Fig. 5-28 Selection of the components

"Next" to continue, "Cancel" to exit.

20. Confirm selection of storage folder for program's short cuts (standard = start menu).

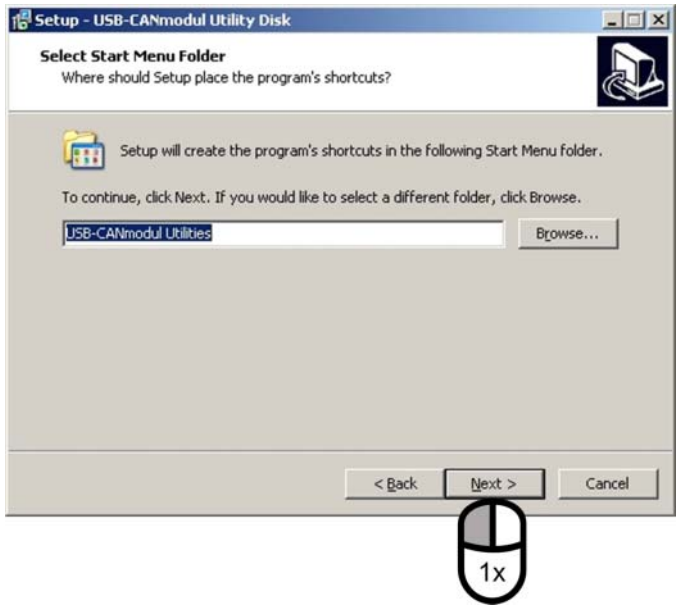

Fig. 5-29 Storage of short cuts

"Next" to continue, "Cancel" to exit.

21. Select additional functions.

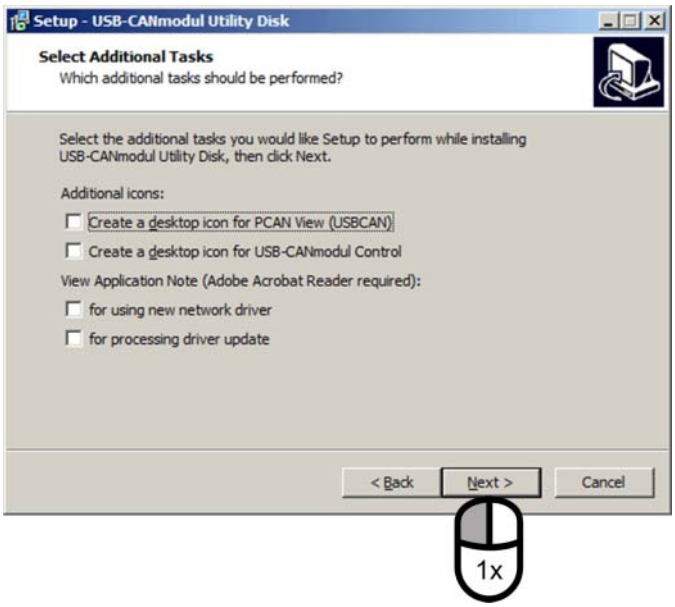

Fig. 5-30 Additional functions

"Next" to continue, "Cancel" to exit.

22. Additional options regarding driver update

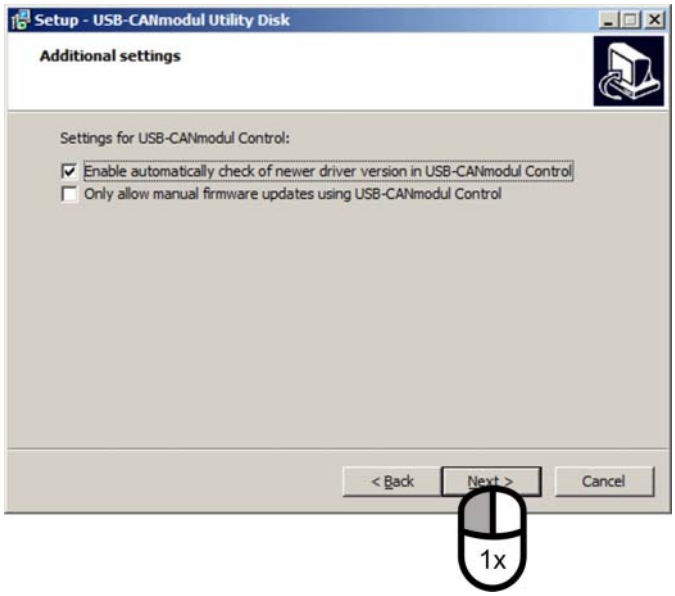

Fig. 5-31 Additional options

"Next" to continue, "Cancel" to exit.

23. Select “Install“ to start the installation. Otherwise select "Cancel" to cancel the installation.



Fig. 5-32 Start the driver installation

24. The installation starts. The bar indicates the progress of the installation. Wait until the bar fills up.

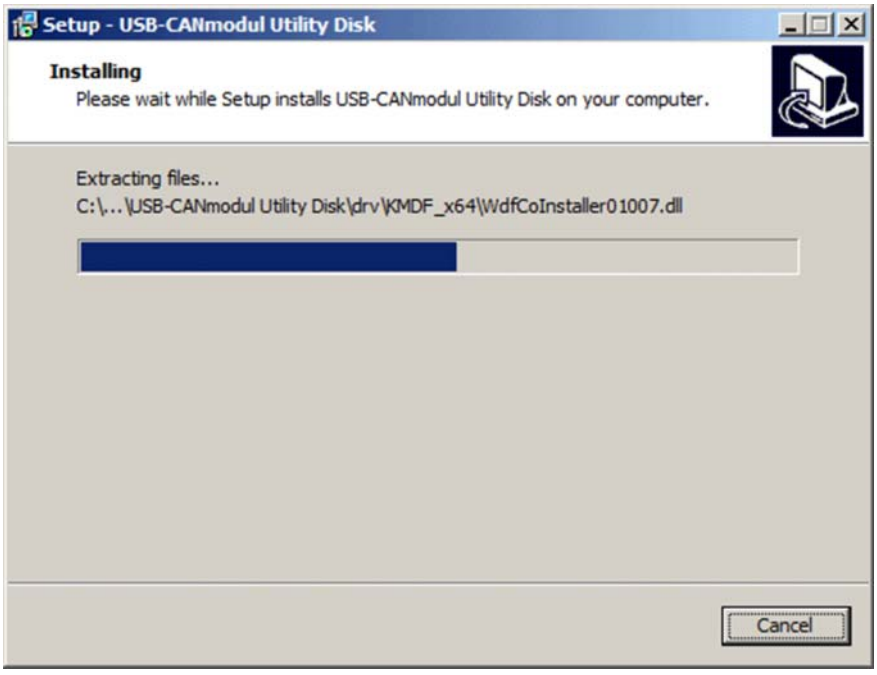

Fig. 5-33 USB-CAN driver installation Process

25. During installation you will receive the following security prompt.



Fig. 5-34 Security dialogue

Select “Install“ to continue

26. When the installation is completed you will receive the following version information.

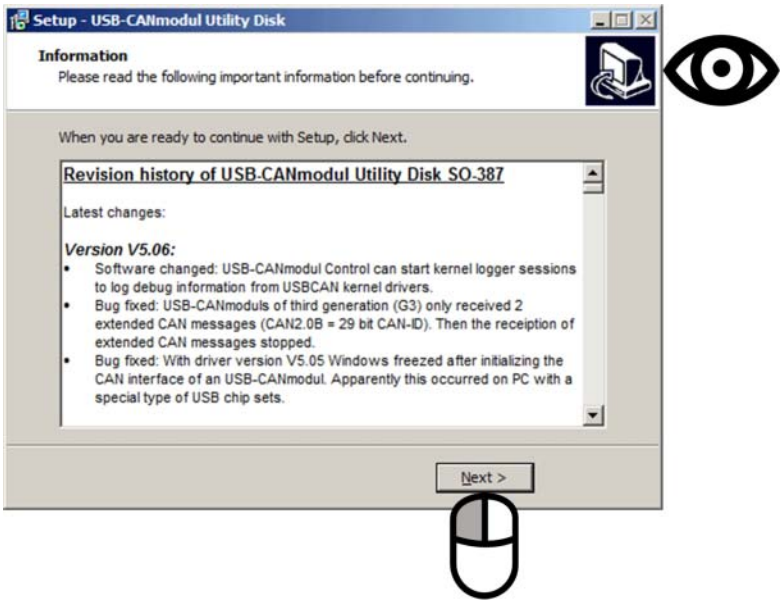

Fig. 5-35 Important information regarding the USB-CAN driver version

"Next" to continue

27. Complete the driver installation by clicking “Finish”

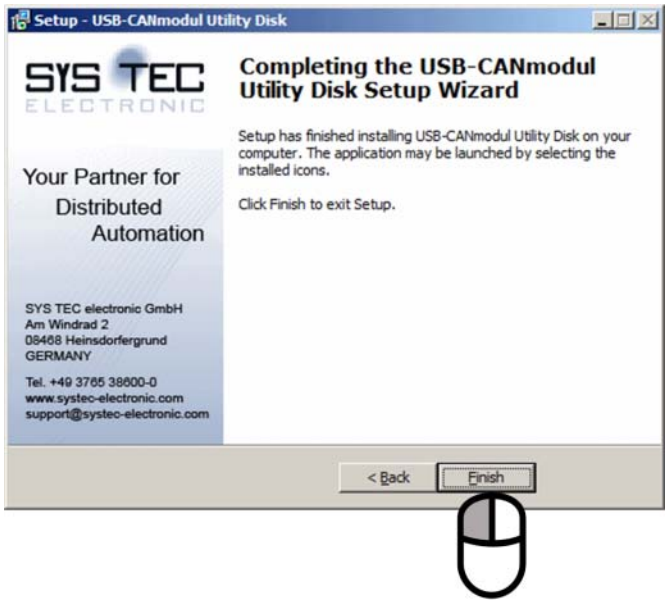

Fig. 5-36 Driver setup has been completed

28. Connect the USB/CAN module to the computer.

    As soon as the module is connected to the system the system recognises the module and starts installing the driver software.

29. Notice the device driver software installation icon on the “windows task bar” and double-click on it.
    The device driver software installation window which shows the installation process will appear.

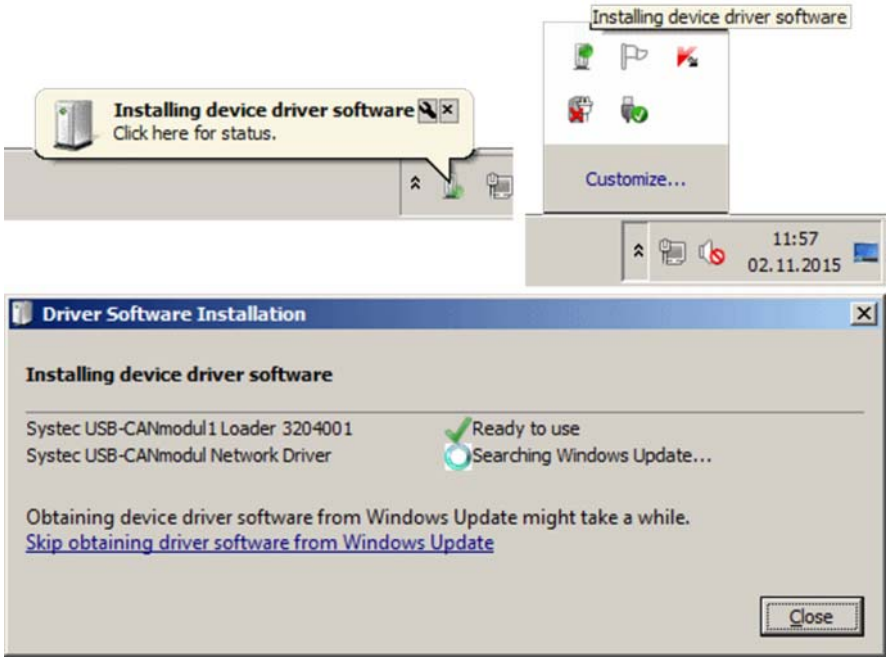

Fig. 5-37 Device driver software installation

Wait for the processes to end in the device driver software installation window until they are marked “Ready to use”.

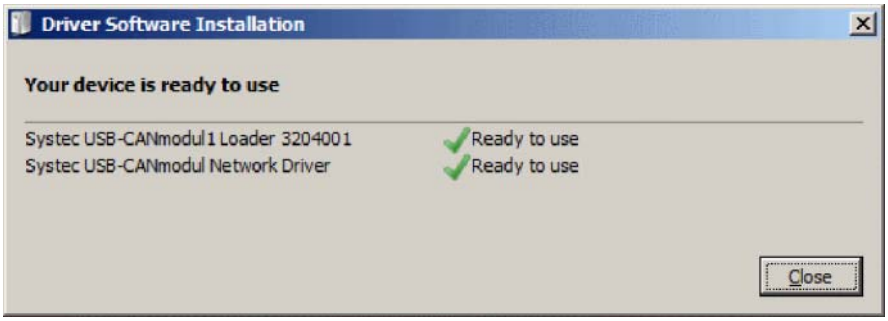

Fig. 5-38 USB/CAN module is now ready to use

30. End the installation by clicking “Close”

    The installation is completed and the LSB Remote Software can be used.

5.3.1.4 First Connection with the End Device

NOTICE

If you start the software without connected and available USB-CAN module you will receive the following message:

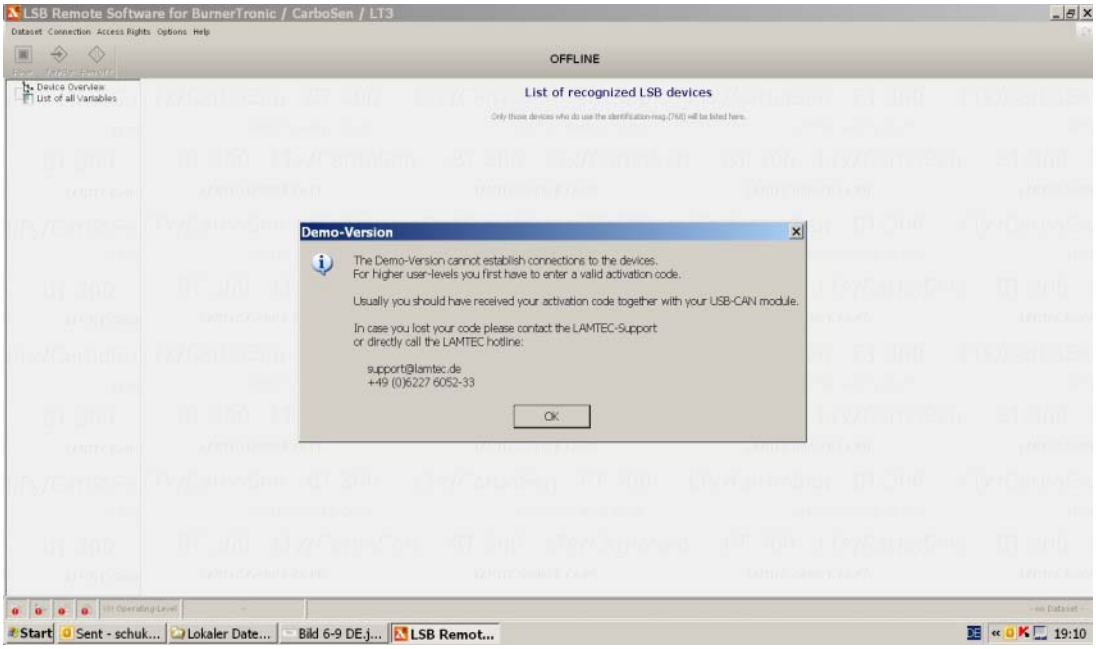

Fig. 5-39 Error message ’No connection with LSB’

1. Install driver for USB-CAN module on the PC.

NOTICE

You **may not** connect the USB-CAN module to your computer while installing module driver!

2. Connect USB-CAN module to PC.
3. Start up of the software.

The software detects USB-CAN module automatically and creates a connection to the LSB.

Create connection manually or choose from several available modules

1. Connect CAN side of modules via LSB physically to end device.
2. Select options menu.
3. Select correct module in the USB-CAN (Systec) menu.

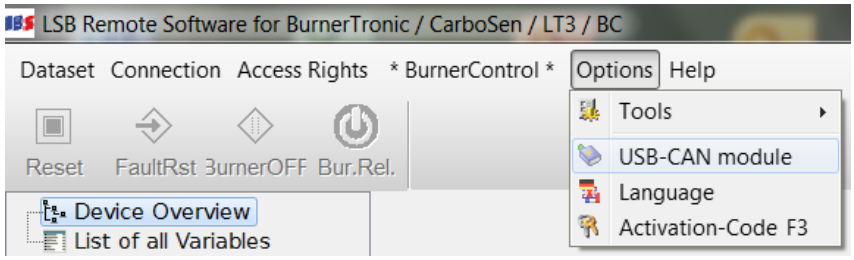

Fig. 5-40 USB-CAN menu

In case of arising problems (incorrect terminating resistor, etc.) the following error message is displayed:

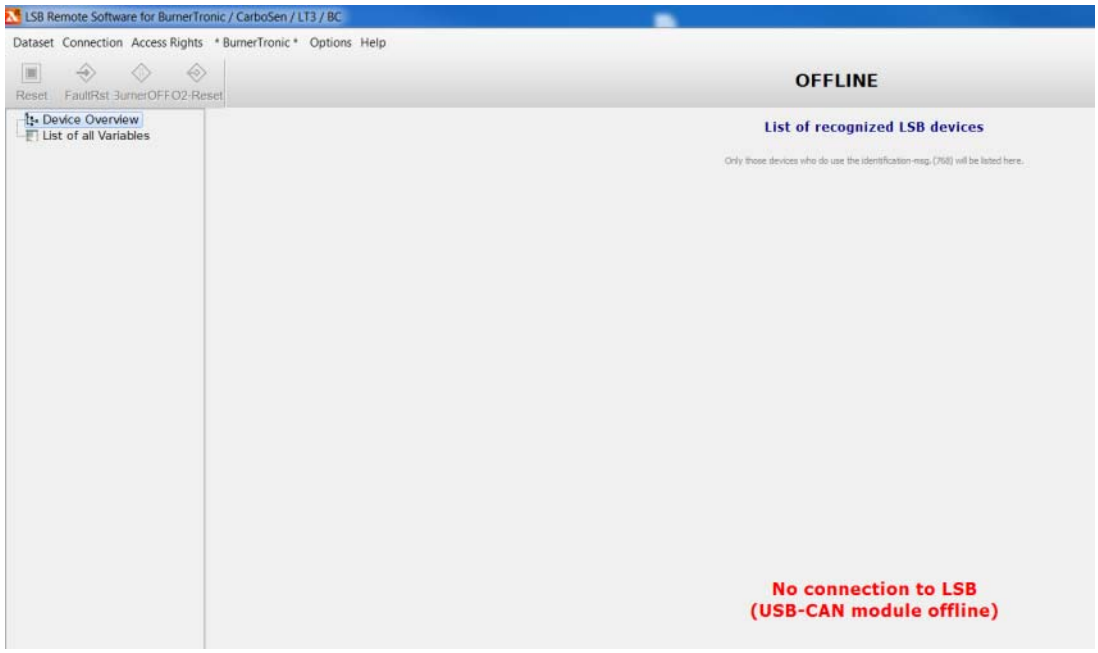

Fig. 5-41 Error message 'No device identified'

5.3.1.5 Release Codes/Release Levels

After completing installation software starts in 'DEMO' mode. The range of functions is heavily restricted. For instance, connections to end devices are impossible. In order to run the software with a broader range of functions, you must enter an access code first. This code is provided by LAMTEC in combination with an USB-CAN module.

Access to the input mask for this activation code is available either via menu (Options >> Enter unlock code) or by clicking the Key icon. The process involving the Key icon is described here:

1. Click Key icon in the bottom left .
   The following entry mask opens:

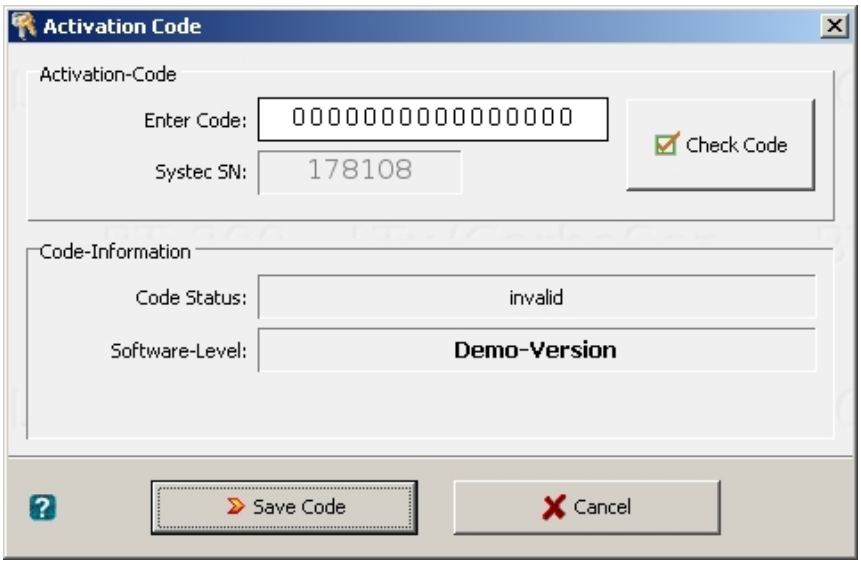

Fig. 5-42 Dialogue window Access code

NOTICE

The activation code applies exclusively to one particular USB-CAN module in each case. For entering a code this USB-CAN module has to be connected already.

NOTICE

If a USB-CAN module is present, the serial number 'Systec SN' is displayed (in this case 178108). If there is no USB-CAN module connected or available, there is no serial number displayed. Entries cannot be made.

2. Enter activation code consisting of 16 characters.
   If the code is accepted, the corresponding software level is displayed, e.g. 'end customer' level.
   The code is stored in the configuration file for the software. After starting up software subsequently the last valid corresponding code (level) is loaded automatically as soon as a connection is set up to a USB-CAN module.

5.3.2 Offline/Online

The software generally distinguishes between two operating modes:

- Offline
- Online

5.3.2.1 Offline Mode

In OFFLINE mode, there is no permanent connection to BT300 (no parameter setting possible). OFFLINE mode is used simply as a display option for data. This allows to display previously stored data sets of end devices. No data set is loaded during start-up. The software starts up with empty parameters.

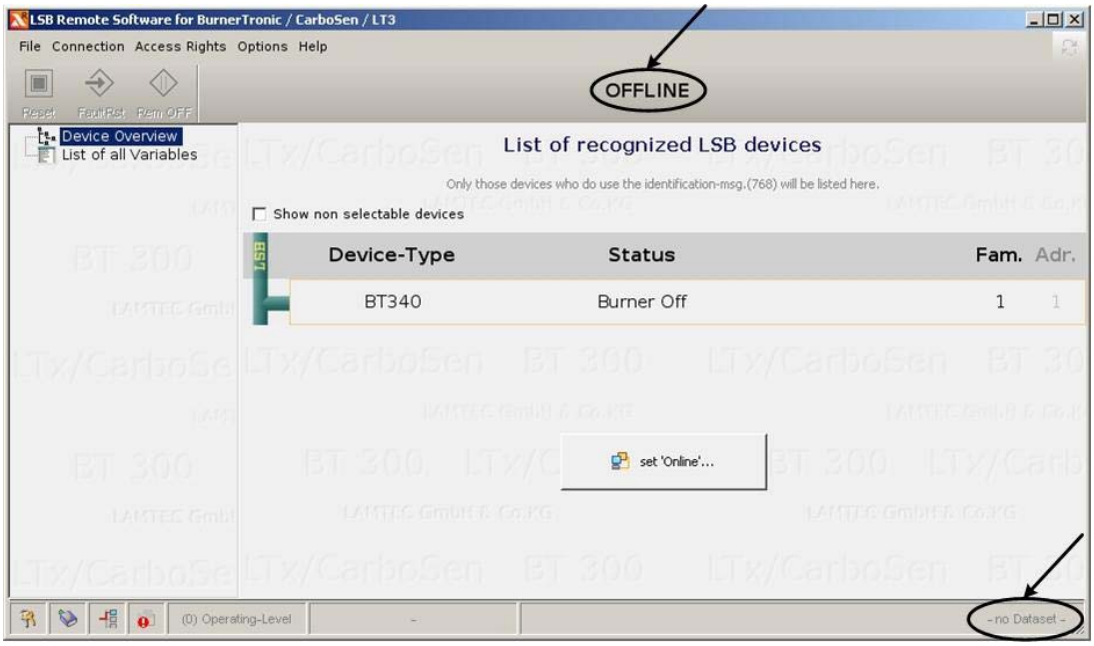

Fig. 5-43 The setting online window

5.3.2.2 Online Mode

In ONLINE mode the end device is synchronised. The data of the end device are read out completely. The permanent connection to the end device is monitored from both sides with a time-out. While establishing connection to the device all functions are locked.

5.3.2.3 Connecting the BT 300 with the PC

If no LCM100 is connected to BT300:

1. Connect RAST 2,5 plug of the LSA100 into socket X31 of the BT300.
2. Connect SUB D 9 plug with USB/CAN converter.
3. Connect USB/CAN converter via USB to the PC.

If LCM100 is already connected to BT300:

1. Connect USB/CAN converter directly with SUB D 9 plug for LSB to LCM100.
2. Connect USB/CAN converter via USB to the PC.

Call up the LSB Remote Software

1. Select the path C:\ Programme\Lamtec.
2. Double-click LSBRemote.exe

   The initial screen opens.

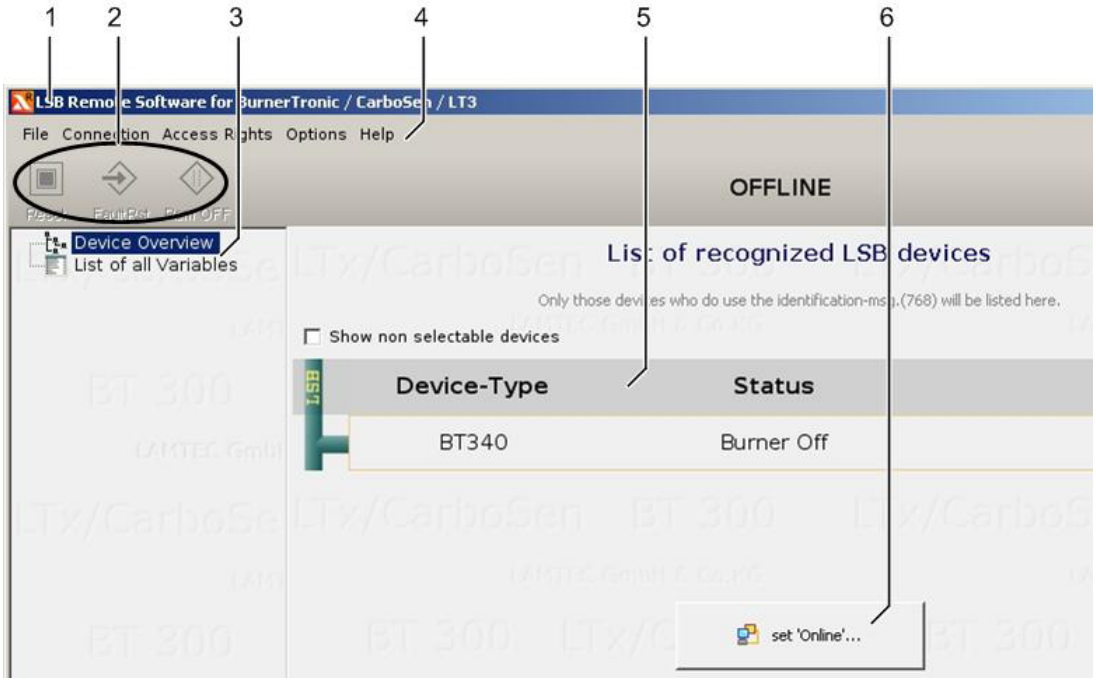

Fig. 5-44 Initial screen LSB Remote Software

1 Initial screen
2 Select function (pictograms)
3 Device list
4 Menu bar
5 Device status
6 'Set online' button

3. Select device type BT300.
4. Click button 'set Online'.

   The following 'device selection' window opens:

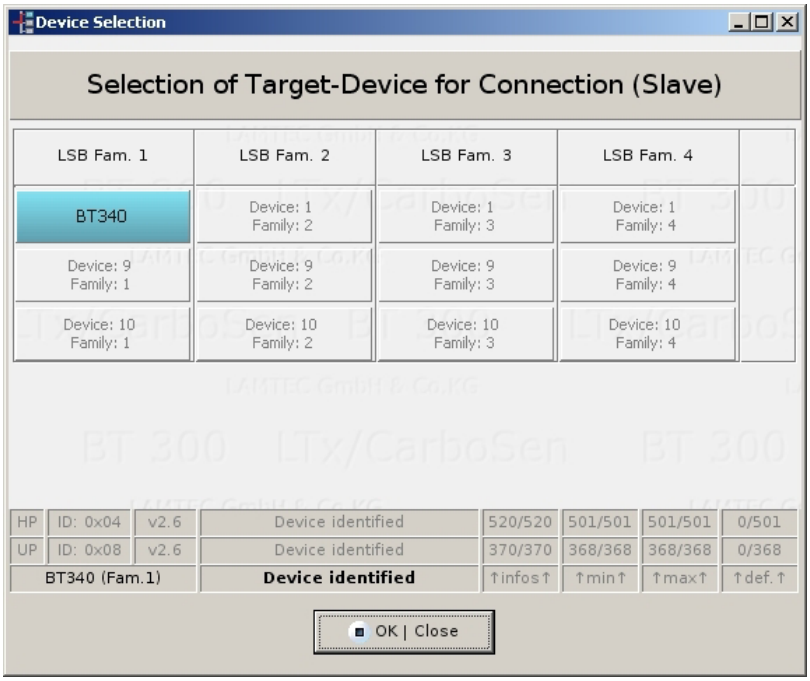

Fig. 5-45 Selection of device

5. Select device you want to establish a connection with and press OK to confirm.
   The software starts to establish a connection.

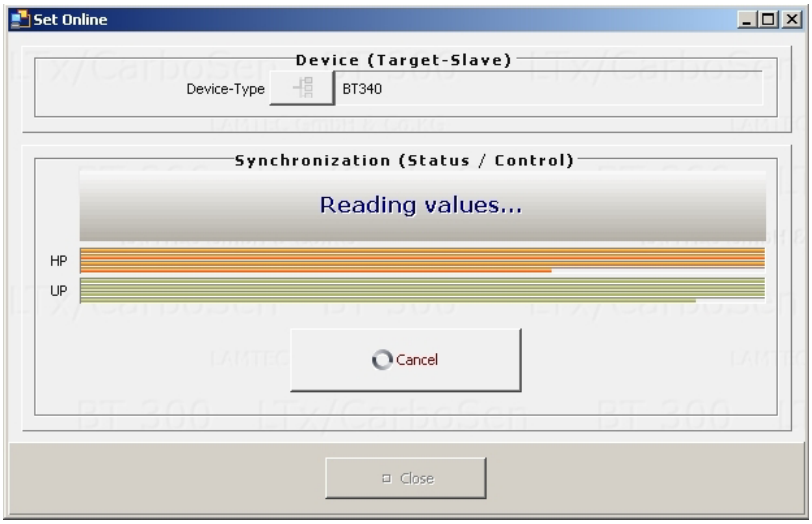

Fig. 5-46 Reading data

On display 'Set online' orange and green progress bars are displayed showing status of synchronisation of PC's data with data of the connected device.

Initial programming of a new device

Enter the customer ID for the new device.

1. Select Access Rights menu.
   The drop-down menu opens.

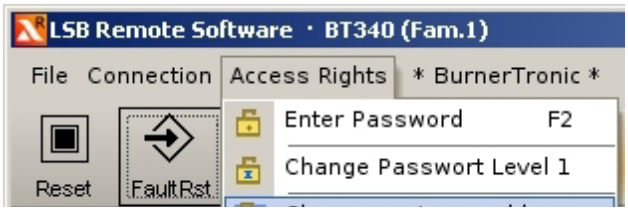

Fig. 5-47 Access rights menu

2. Select Change customer abbrev. command.
   The Change customer abbreviation (and password level 2) opens.

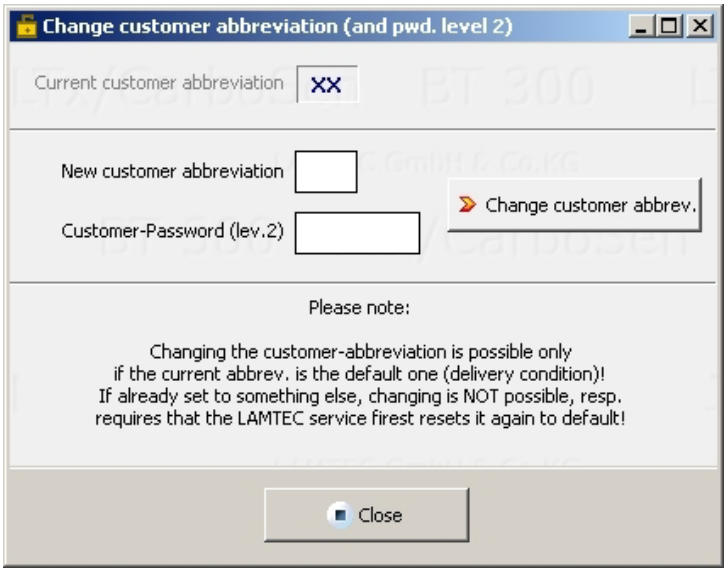

Fig. 5-48 Change customer abbreviation

NOTICE

The customer ID process must be carried out for each device once. This process sets passwords specific to each customer. The customer ID cannot be deleted or changed.

Enter Password

Entering the level 1 password

1. Choose the 'Access rights' menu.
   The menu opens.

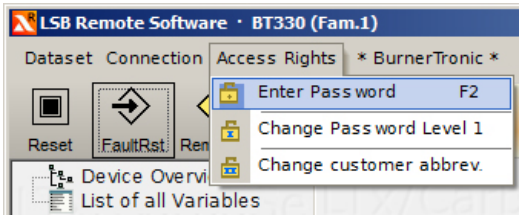

Fig. 5-49 "Access rights" menu

2. Select the 'Enter password' command.
   The password dialogue box appears:

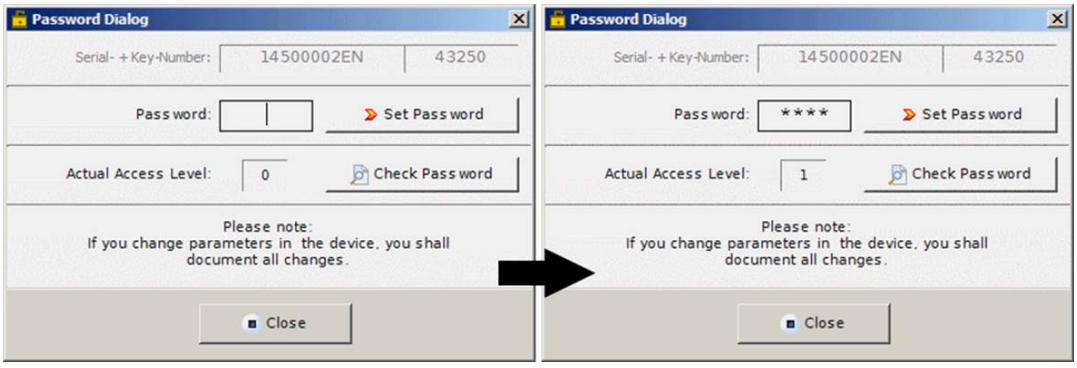

Fig. 5-50 Password dialogue box

3. Enter your customer password for access level 1 in the 'Password' text box.
4. Click the 'Set password' button.
   Access to all level 1 functions is granted now.

NOTICE

The 'Check password' button allows you to check the validity of the password.

Edit Parameter

1. Select 'BurnerTronic' menu.
   The drop-down menu opens.

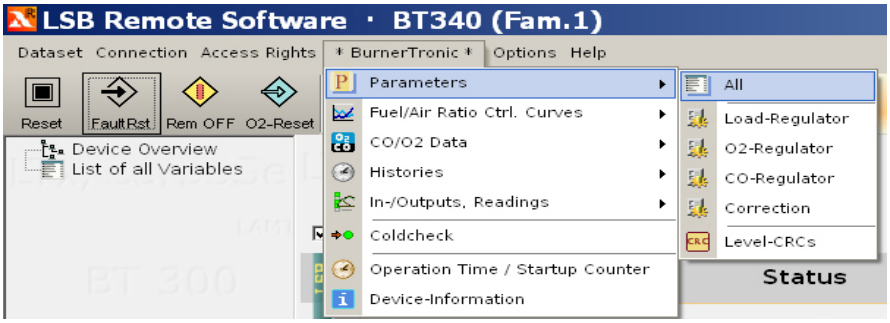

Fig. 5-51 Parameter sub menu

2. Select parameters sub menu.
3. Select 'All' function.
   The 'All' parameter window opens.

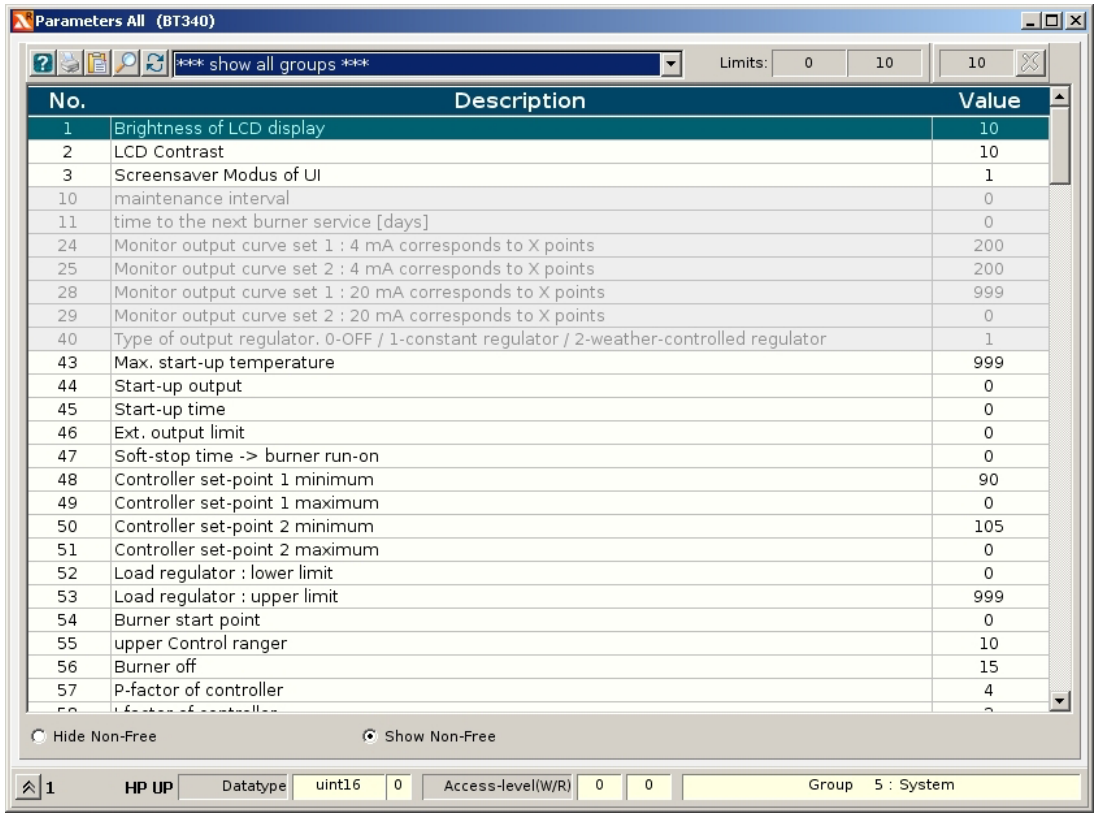

Fig. 5-52 All Parameters

4. Select parameter group 5 (System).
   You can now set properties for UI300 User Interface.

NOTICE

For changes in parameter group 5 no additional confirmation is necessary.

NOTICE

Parameter group 10 ’Maintenance’ is without function at present.

NOTICE

Parameter groups 15 to 35 were described in relation to corresponding system options.

ENTER and change values

1. Select the parameter value by double-clicking.
   Alternatively, use arrow keys to move up and down to the required value.
2. Press ENTER to confirm your selection.
3. Change value by clicking on ▲ or ▼fields or via up/down arrow keys on your keyboard.
4. Press ENTER to confirm or select a different parameter.
5. You can find a description of the parameters in the document ’Supplementation of parameter list for commissioning process’ (DLT1204)
6. Activate new settings by interrupting power supply and restarting BT300.

Parameters of Operating Modes

Para-meter No.	Description	Gas burner modulating without pilot burner	Gas burner modulating with pilot burner	Gas burner pneumatic modulating without pilot burner	Gas burner pneumatic modulating with pilot burner	Oil burner modulating without pilot burner	Oil burner modulating with pilot burner	Oil burner 2-stage without pilot burner	Oil burner 2-stage with pilot burner	Oil burner 3-stage without pilot burner	Oil burner 3-stage with pilot burner
302	Start with/without pilot flame oil	-	-	-	-	0	1 2*/3*/4*	0	1 2*/3*/4*	0	-
303	Start with/without pilot flame gas	0	1 2*/3*/4*	0	1 2*/3*/4*	-	-	-	-	-	-
525	Definition of number of stages in oil operation	0	0	0	0	0	0	1	1	2	-
527	Air damper position while changing from stage 1 to stage 2	-	-	-	-	-	-	Value between setting firing-rate position 200 and 300	Value between setting firing-rate position 200 and 300	Value between setting firing-rate position 200 and 300	-
528	Air damper position while changing from stage 2 to stage 1	-	-	-	-	-	-	Value between setting firing-rate position 200 and 300	Value between setting firing-rate position 200 and 300	Value between setting firing-rate position 200 and 300	-
529	Air damper position while changing from stage 2 in stage 3	-	-	-	-	-	-	-	-	Value between setting firing-rate position 300 and 400	-
530	Air damper position while changing from stage 3 to stage 2	-	-	-	-	-	-	-	-	Value between setting firing-rate position 300 and 400	-
801	Definition of terminal allocation	2/3*/4*	2/3*/4*	2/3*/4*	2/3*/4*	0/3*	0/3*	0/3*	0/3*	1/04*	-
802	Running leakage test	0; 1; 2	0; 1; 2	0; 1; 2	0; 1; 2	-	-	-	-	-	-
808	Fuel selection	1	1	1	1	0	0	0	0	0	-

Fig. 5-53 Parameters of the operating modes
** available with BT340 only*

Controller Parameters

For setting the control parameters the LSB Remote Software is providing special input windows. According to the access level functions can be activated/deactivated and values can be edited within these windows.

Call up windows through parameter sub menu.

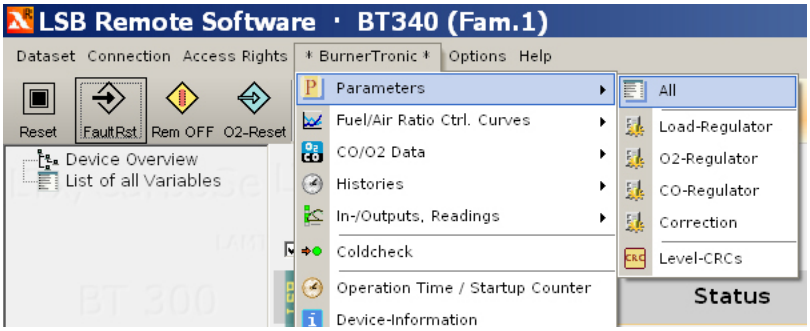

Fig. 5-54 Parameter sub menu

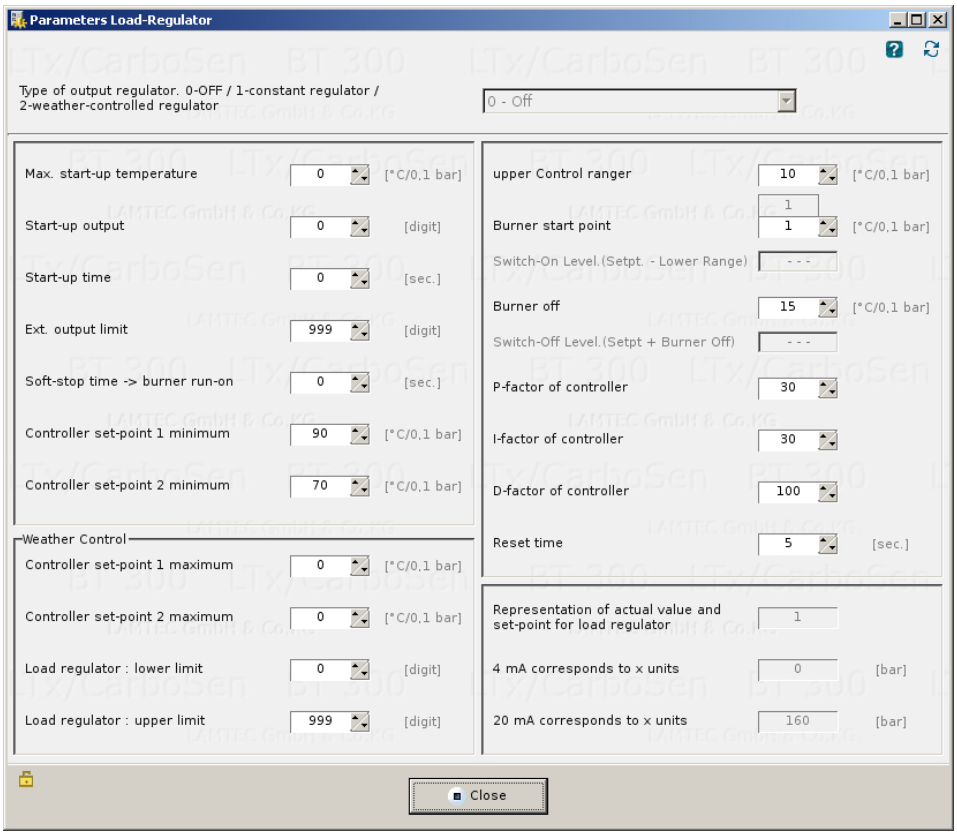

Fig. 5-55 Window for setting parameters of firing rate controller

NOTICE

For informationen on the Firing Rate Controller Module refer to chapter *7.1 Firing-Rate Controller Module LCM100*

For informationen on the CO/O_2 control refer to the documents no. DLT1207 und DLT1209.

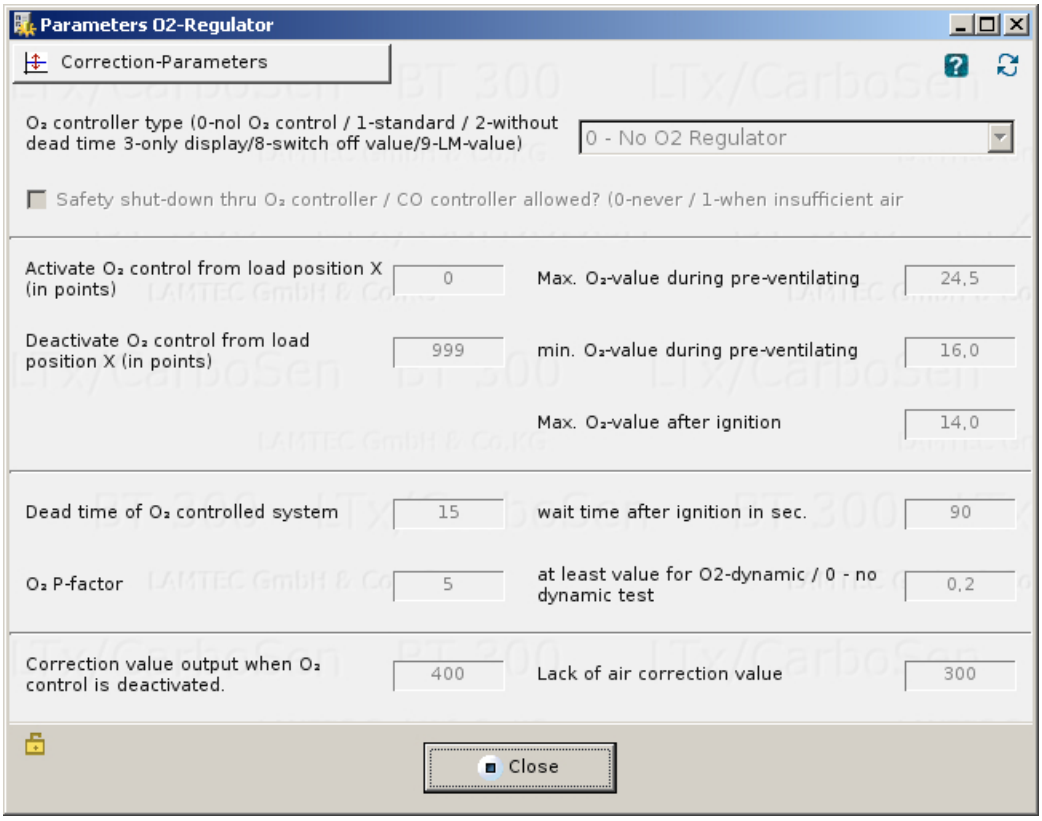

Fig. 5-56 Window for setting O_2 trim parameters

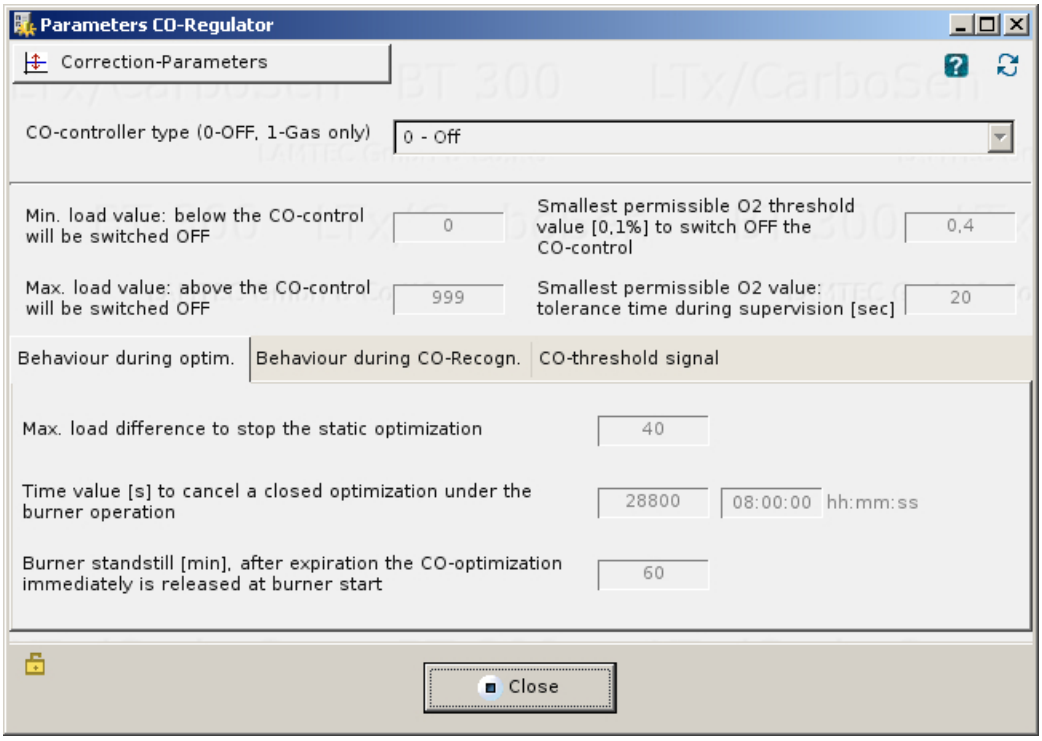

Fig. 5-57 Window for setting CO control parameters

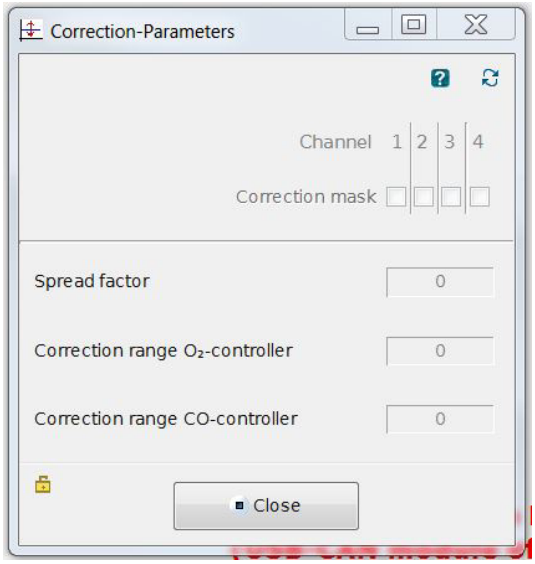

Fig. 5-58 Window for setting correction parameters

NOTICE

You will find settings of the CO/O_2 control in the commissioning supplement for "Integrated CO/O_2 control", print no. DLT1207.

5.3.3 Read Out Faults

1. From the ’BurnerTronic’ menu, select the sub menus ’Histories’ and ’Fault history’.
   The window for selecting the fault history opens.

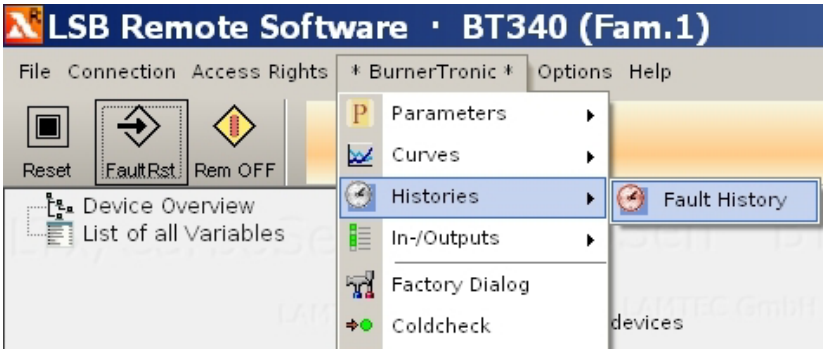

Fig. 5-59 Read faults

2. Select the ’Fault history’ function.
   A window containing the last ten faults opens.

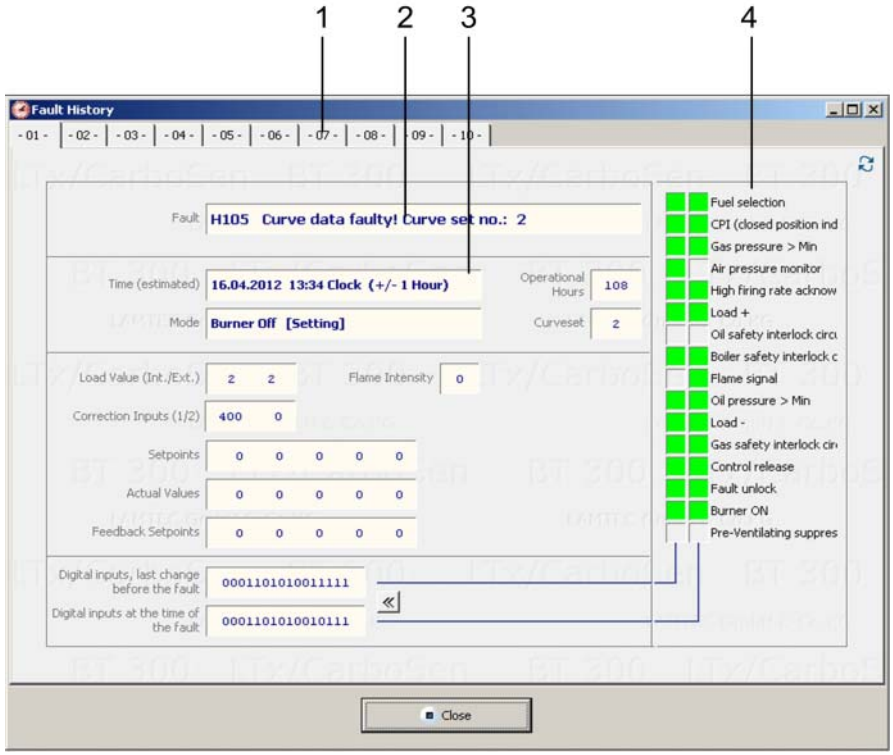

Fig. 5-60 Fault information

1 Fault selection tab
2 Description of fault
3 Time that fault occurred (estimated)
4 Burner status display

NOTICE

The date and time of the fault are calculated basing on the operating hours accumulated at the time of the fault, the current BurnerTronic operating hours, and the computer time. If BT300 was disconnected from the mains after fault occurred and before fault has been read, the date and time of the fault will not be calculated correctly.

Call more fault histories by CO/O_2 fault histories and temperature statistics.

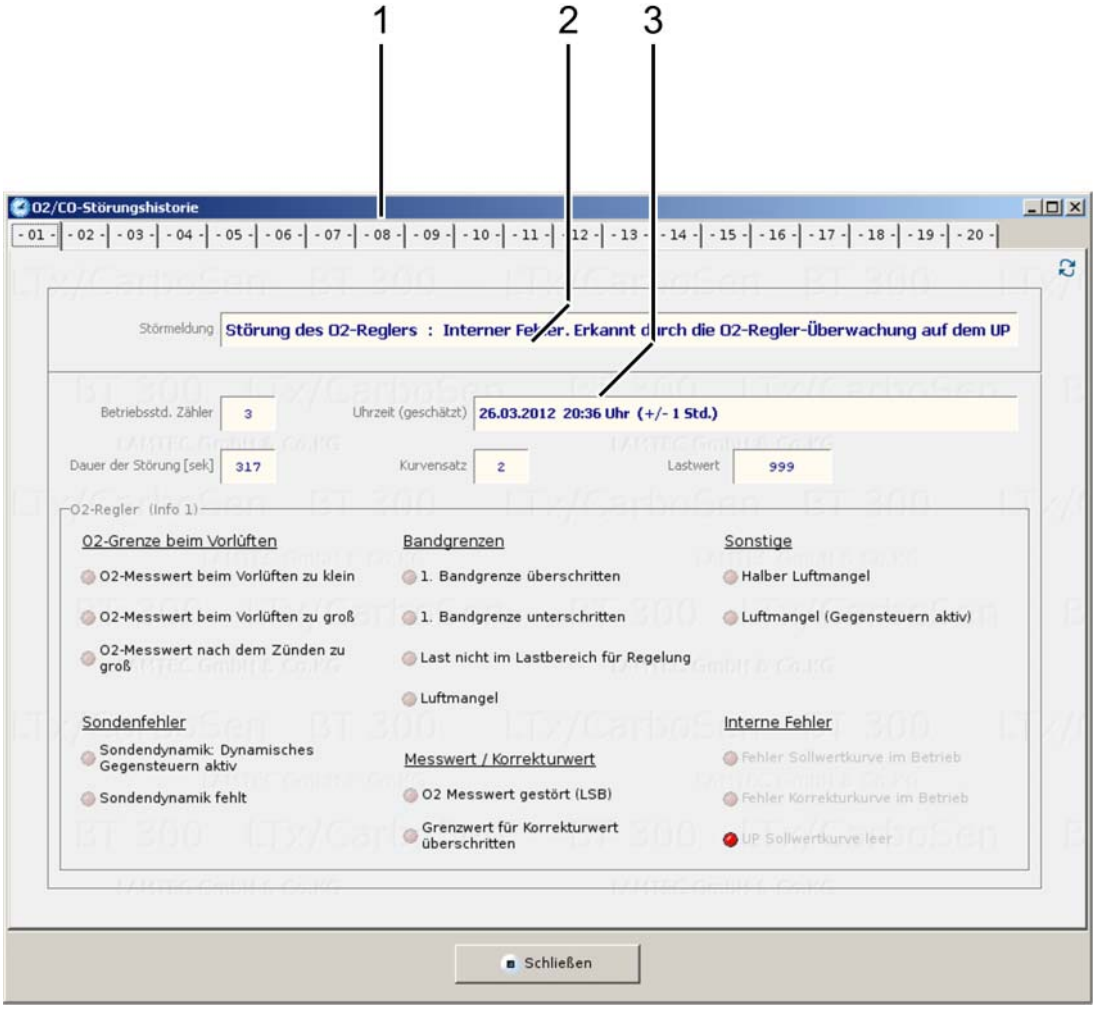

Fig. 5-61 CO/O_2 fault history

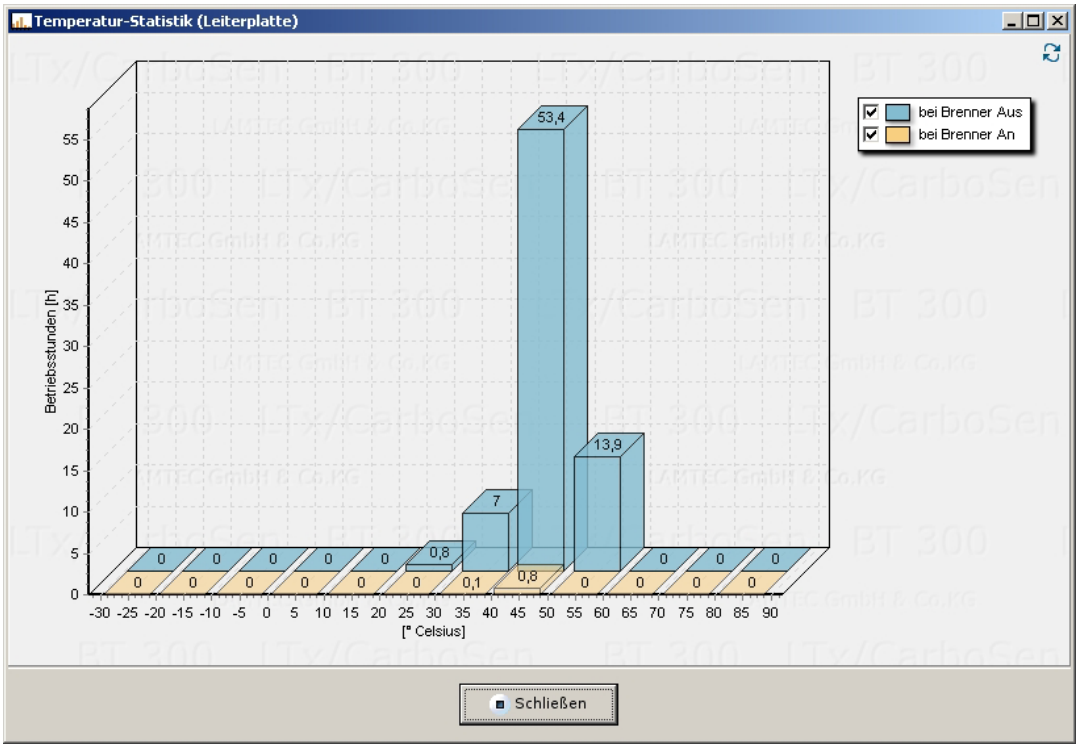

Fig. 5-62 Temperature statistics

NOTICE

The temperature is measured directly on the circuit board of the BT300. Due to self-heating this temperature is always slightly higher the ambient temperature.

5.3.4 BT300 Curve Dialogue

The curve dialogue window shows the setpoint curves of the channels (ratio controller) per curve set - either oil (1) or gas (2). Switch between display in curves (’setpoint graphic’) and display in tables (’Curve tables’).

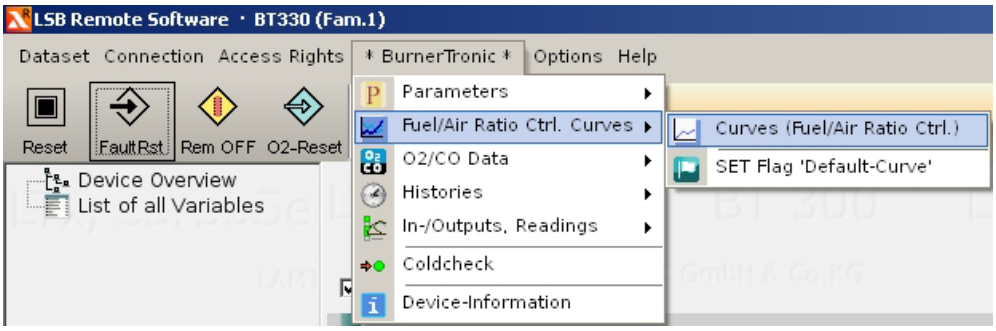

Fig. 5-63 Open curve dialogue

5.3.4.1 Setpoint Graphic

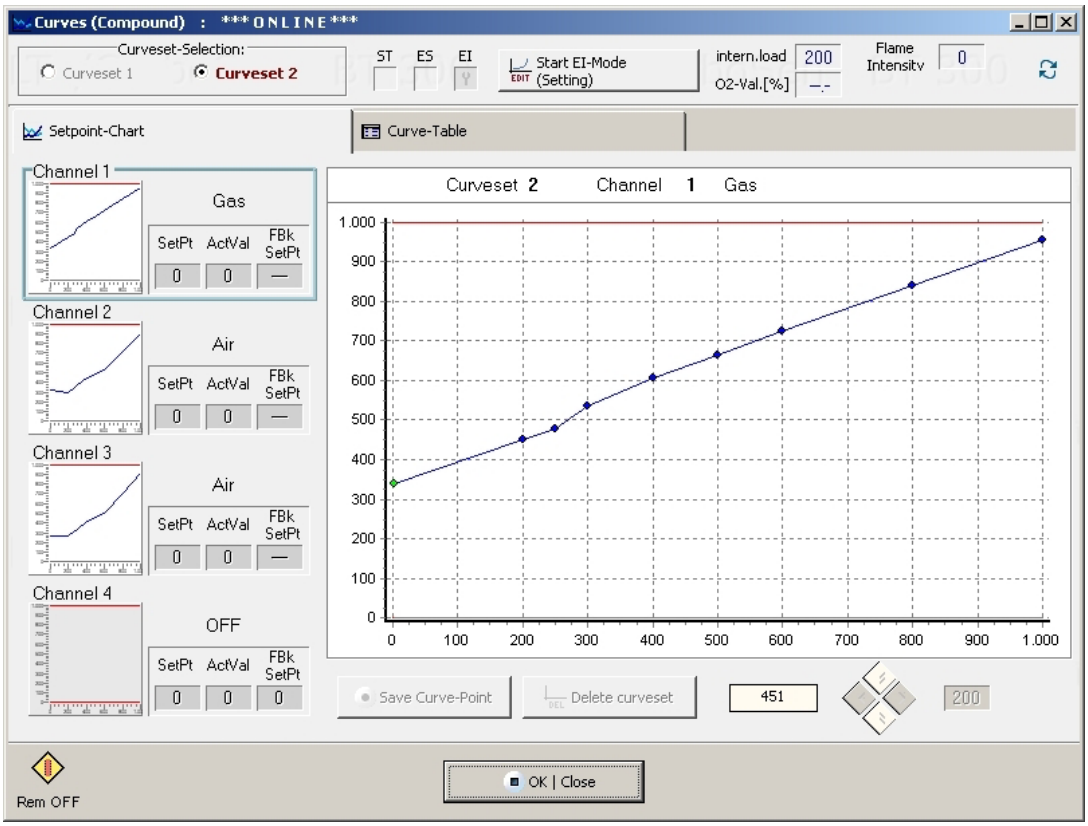

Fig. 5-64 Setpoint graphic window

5.3.4.2 Curve Table

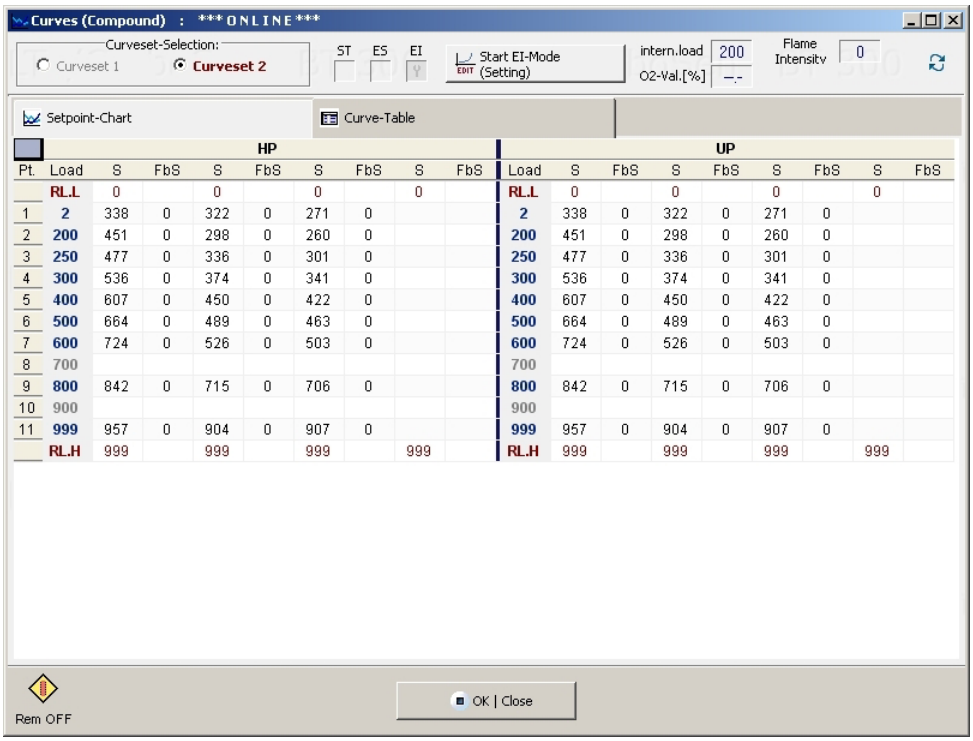

Fig. 5-65 Curve table window

5.3.4.3 Set Curve

To make curve changes to BT300, change BT300 to 'setting mode' first.

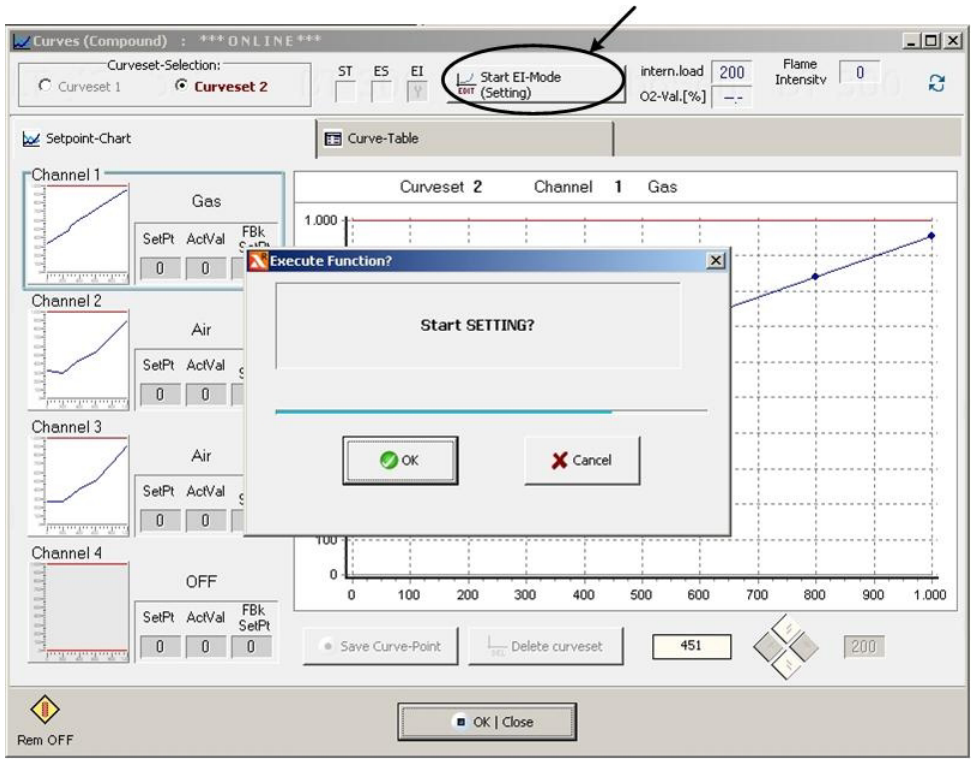

Fig. 5-66 Setting dialogue

NOTICE

This function affects safety. The function must be re-confirmed within eight seconds.

In setting mode of the curve set two functions of the device are available:

1 Save point

2 Delete curve set

NOTICE

These settings modify individual curve points but do not delete them.

In setting mode additionally to the wrench icon a red frame is displayed around the dialogue.

Use arrow keys or corresponding buttons to move firing rate (←,→) or setpoint values of the channels (↑, ↓).

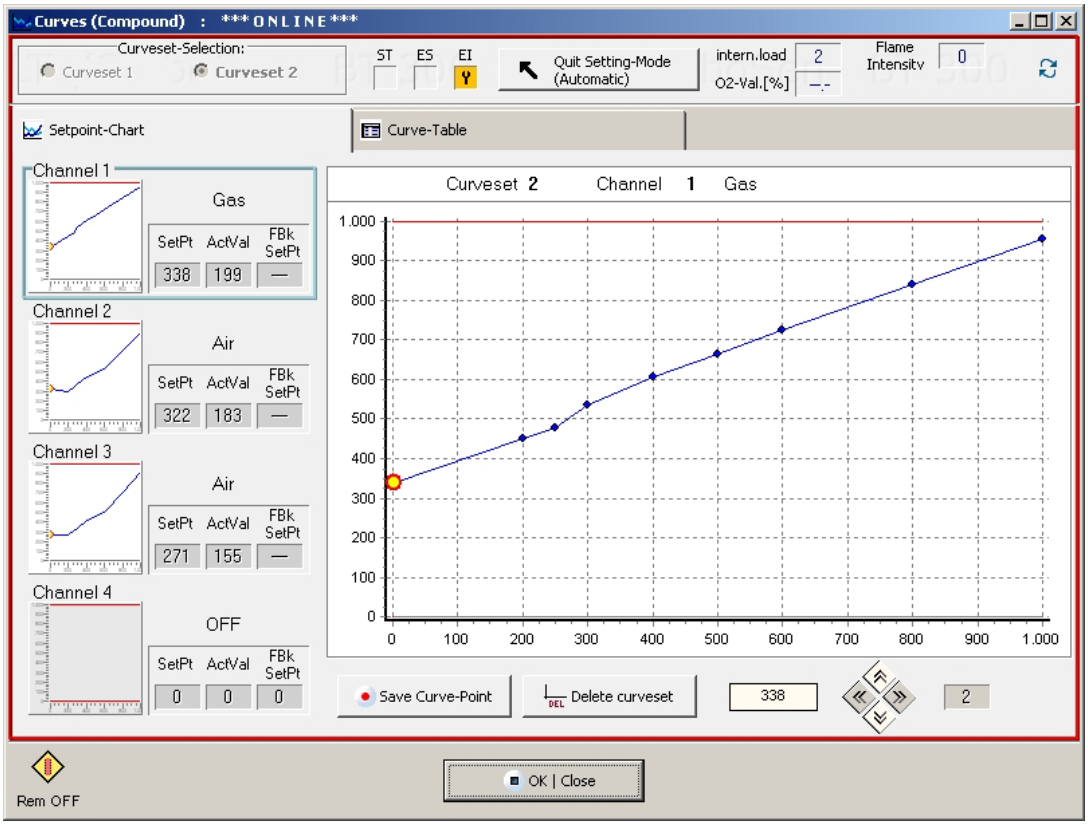

Fig. 5-67 Setting window

NOTICE

While using the overshoot-function you should program all points top down because they must be approached in overshoot-process that way. Only when you act according to this procedure the required position will match the actual position in operation.

NOTICE

Pre-purge starts as soon as the damper reaches pre-purge position and - if you use a VSM - the last but one point of the fuel/air ratio control curve is passed.

NOTICE

The channels' position in the last but one curve point must be lower than at the last curve point.

5.3.5 Programming of Fuel/Air Ratio Control

1. Click on menu ’Curves (Fuel/Air ratio control)’.

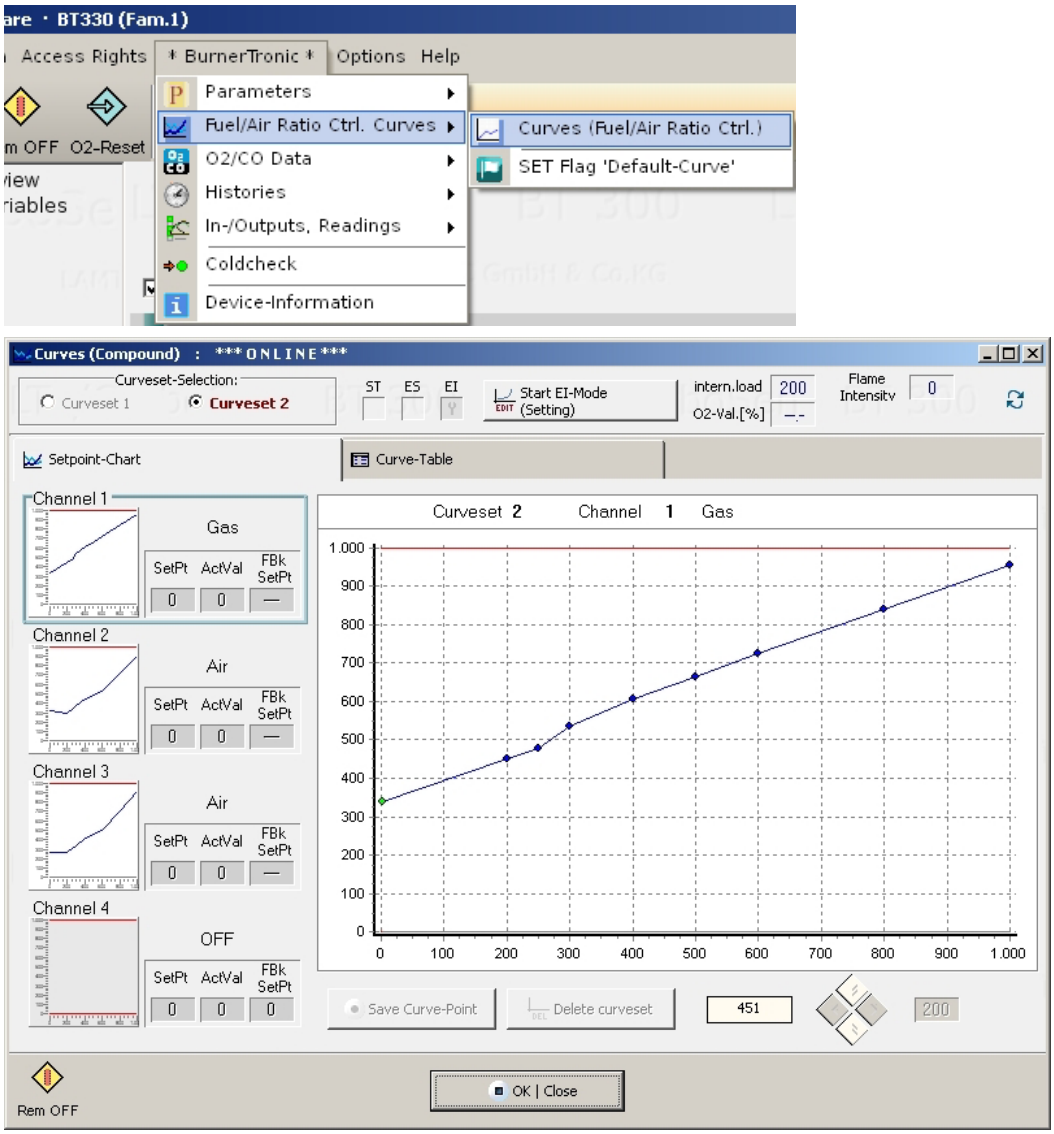

Fig. 5-68 Curves window

2. Click on button ’Start EI-Mode (Setting)’.
3. Press OK to confirm the message ’Setting start’.

   Automatic EI Mode is active now.

NOTICE

To use channel 4 set a continuously increasing curve!

NOTICE

Press OK during running time of the blue bar in the message.
Without activity during this period the process is aborted. An error message is issued.

Take note of following information in this window:

– A blue frame around curve and channels' positioning information is indicating selection of channels you want to set.
– Fields 'Setpoint' show respective setpoint position of the actuator.
– Fields 'Actual Value' show actual position of the actuator.
– 'Big' diagram showing curve progression of selected channel.
– Yellow point with red border showing position of selected curve point.

1. Change actuator position (actuating angle) of selected curve point with buttons ▼ and ▲ .
2. Select curve points with buttons ◄ and ► to switch to another curve point.

NOTICE

These functions are not limited to window buttons of Fuel Air/ratio curves. The use of arrow keys on the PC keyboard is possible as well.

How to program a curve point

1. Select the internal firing rate of curve point 2 with button ◄. (Display button next to EI-Mode).
2. Select channel 1, by clicking with cursor on 'small diagram' below channel 1.
   The data field of channel 1 is bordered blue.
3. Set the actuator's position for ignition position with buttons ▼ and ▲ .
4. Select channel 2, by clicking with the cursor on the 'small diagram' below channel 2.
   The data field of channel 2 is bordered blue.
5. Set the actuator's position for ignition position with buttons ▼ and ▲ .
6. Proceed with channels 3 and 4 similarly, if existent and used.
7. Click on 'save point' button.

The point is stored.

The feedback of channel 4's setpoint curve must increase continuously.

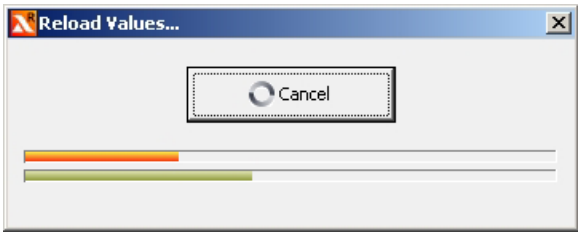

Fig. 5-69 Reading values

As soon as you store the point new program data is read in again from BT300.

Warm setting/Cold setting

1. Start the burner by connecting voltage on terminal X10 Pin 2/'burner on'.

NOTICE

Knowing the curve settings allows to adjust the burner in 'cold' condition. The specifications are the same as in 'warm' condition. In 'cold' condition the burner is OFF.

A red frame around the basic screen shows the burner's actual state. The example below shows burner in pre-purge period.

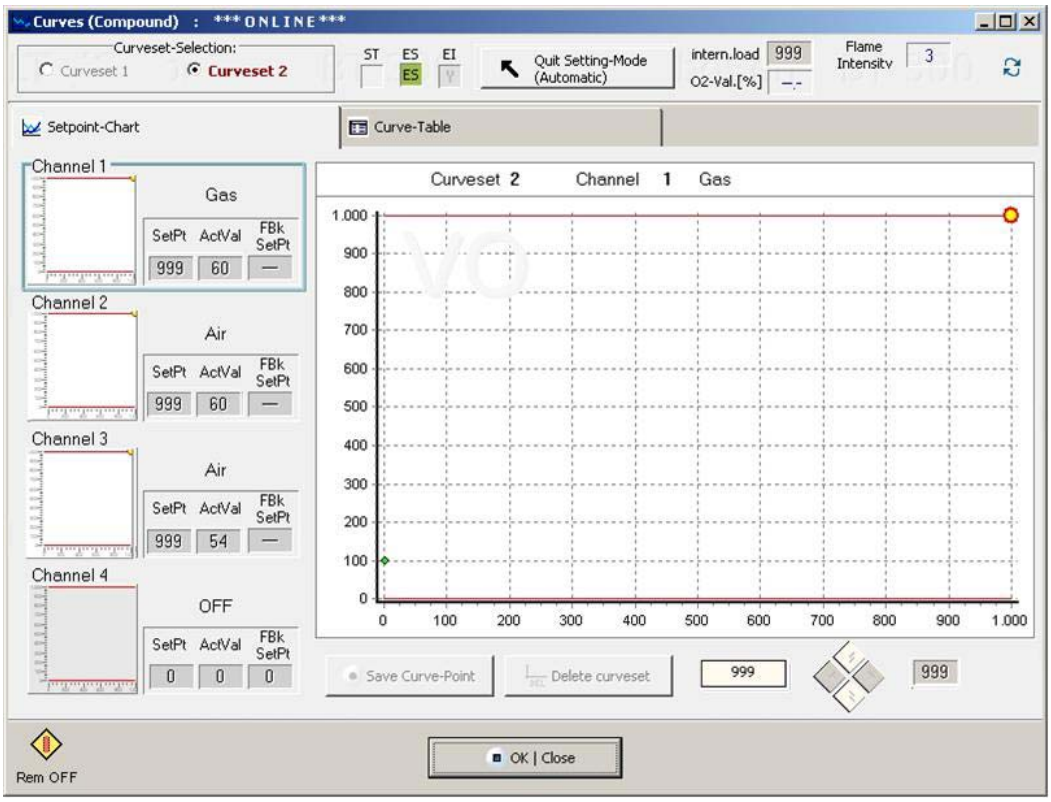

Fig. 5-70 Curve setting - pre-purge period

2. As soon as the burner is in control mode adjust the actuator position to get the flame igniting and burning well.
3. Click button 'save point' to confirm.

NOTICE

The actuators run to the adjusted position immediately after adjusting it.

NOTICE

The fan motor must be running to adjust channel 4.

The point is stored.
The feedback setpoint curve must rise continuously.

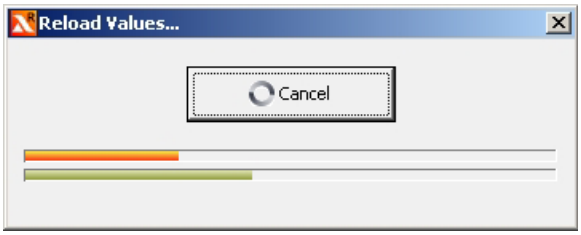

Fig. 5-71 Values are read

As soon as the point has been stored, the program reads the data back from BT300.

Programming firing rate curve

1. Click button ➤ to select first curve point of the firing rate curve.

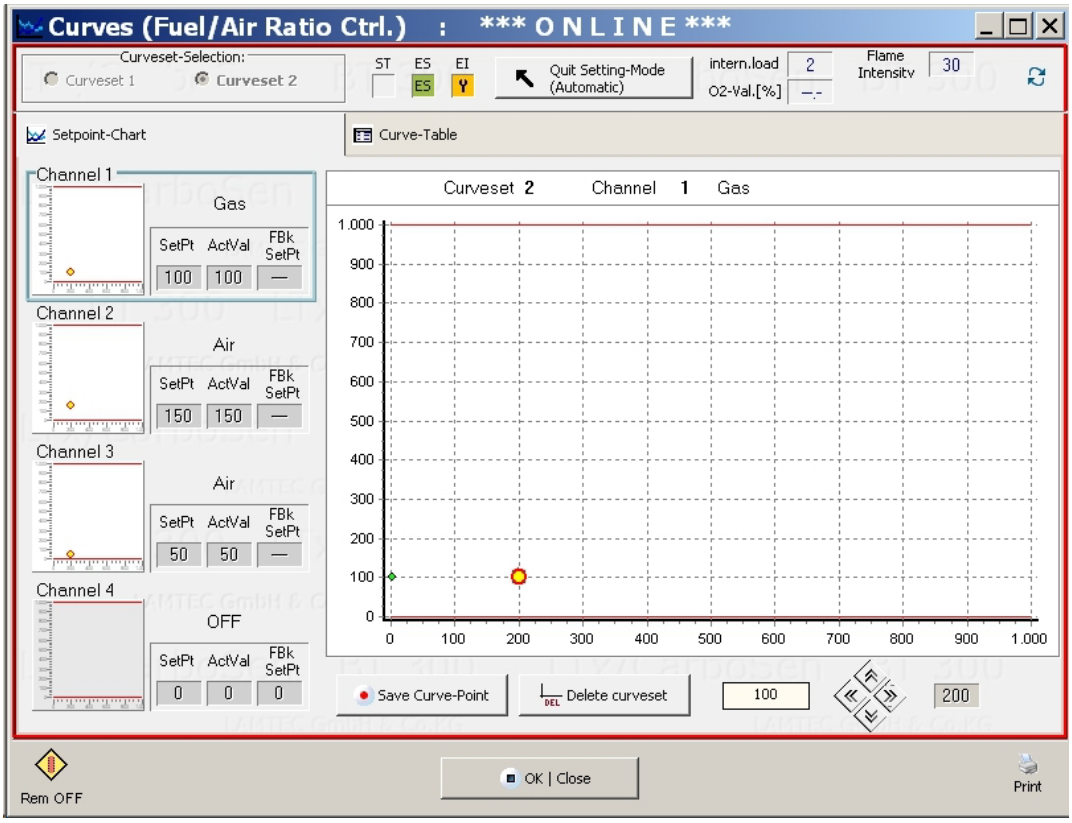

Fig. 5-72 Programming the firing rate curve

2. Set the minimum of the required burner firing rate.

NOTICE

Proceed in small steps for every used channel. If the steps are too large, this may cause a flame blow-off or too high CO/soot emissions.

After point has been stored, this diagram shows a straight line between ignition point and firing rate point 200.

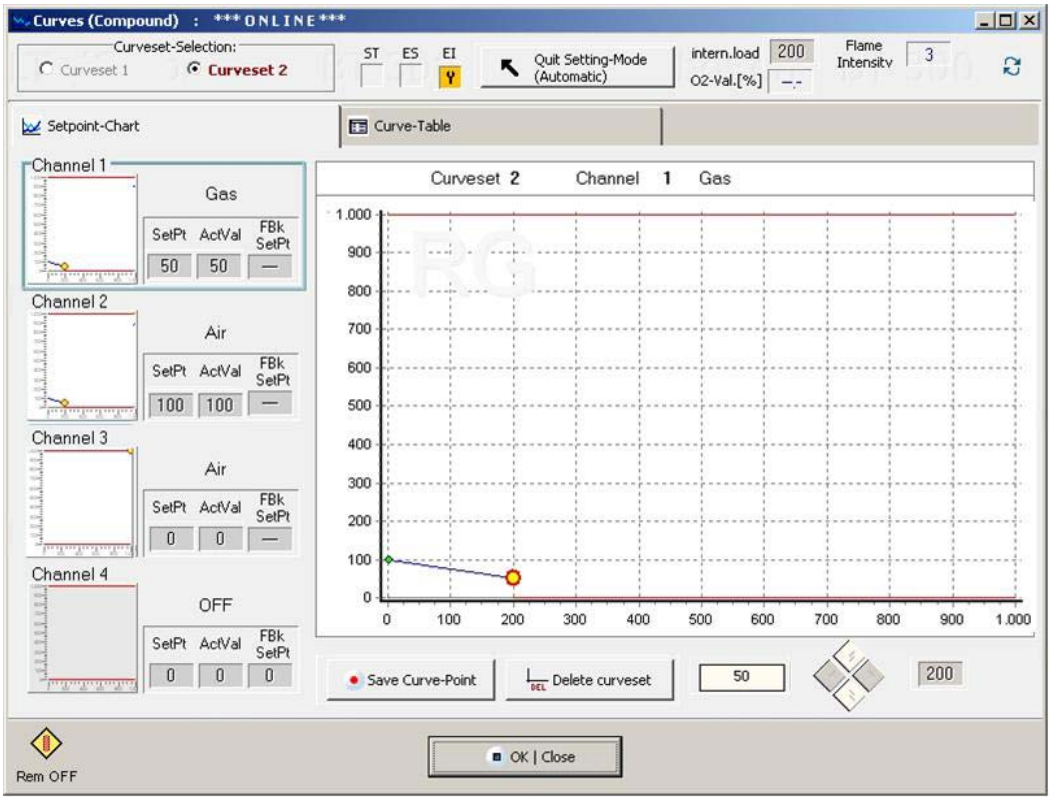

Fig. 5-73 Programming the firing rate curve

3. Click on button ➤ to select a higher curve point of firing rate curve and adjust burner at this point.
4. Adjust burner this way up to the firing rate point 999 (nominal output).

NOTICE

Following firing rate points are available: 200, 250, 300, 400, 500, 600, 700, 800, 900, and 999.

NOTICE

For using channel 4, you must set a continuously increasing curve!

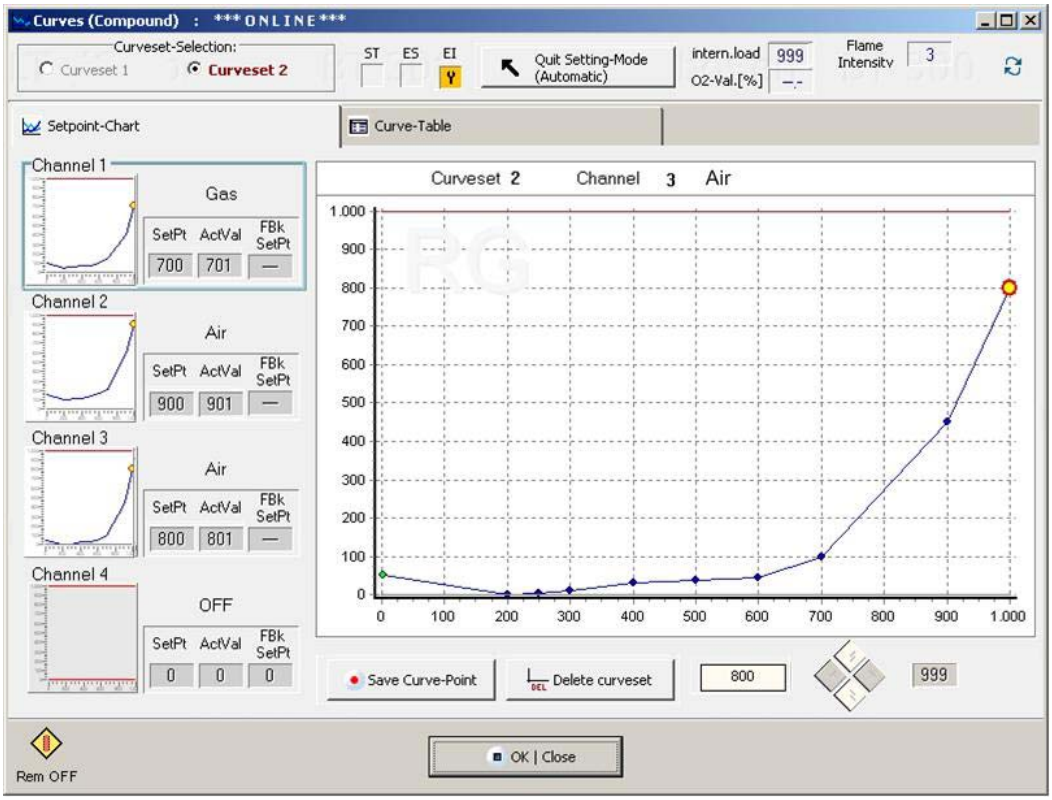

Fig. 5-74 Programming of firing rate curve

NOTICE

You do not need to adjust all provided curve points on the firing rate curve. The BT300 interpolates between two adjacent curve points linearly, regardless curve points in between are plausible or not.

Changing curve point

1. Use buttons ◄ and ► to choose firing-rate point on firing-rate axis.
2. Click on the modifying channel.
3. Use buttons ▼ and ▲ to change position of the actuator.
4. Save curve point to complete changes (button 'point stored').

The curve point is changed.

5.3.6 Programming a Staged Operation

1. Click in menu on ’Curves (Fuel/Air ratio control)’

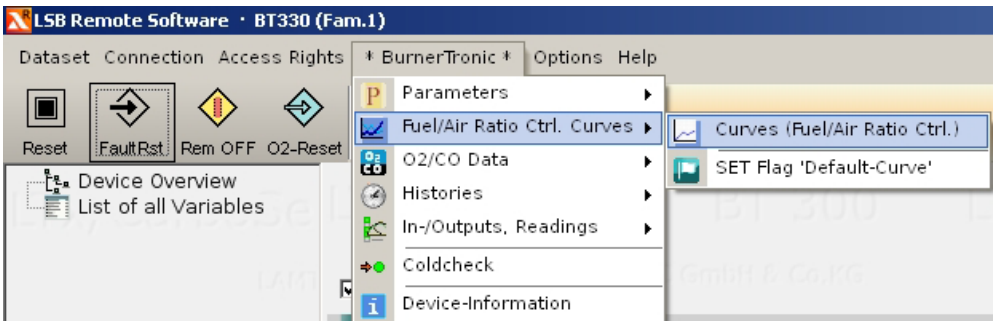

Fig. 5-75 Curve selection

Window ’Curves (Fuel/Air ratio control)’ opens.

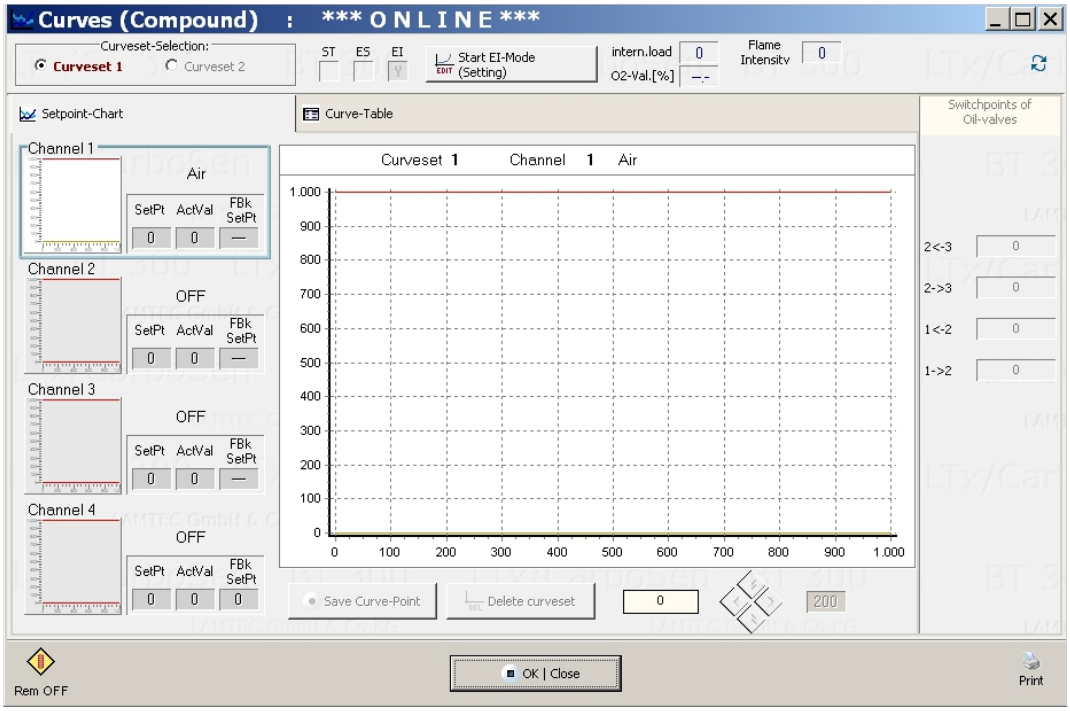

Fig. 5-76 Curves window

2. Click button ’Start EI-Mode (Setting)’.
3. Quit the message ’Start setting’ with OK.

NOTICE

Click button OK in the message during running time of the blue bar. Without any action in the meantime the process will be aborted and an error message is indicated.

You are now in ’Setting’ mode. This is indicated by wrench icon and red frame around the dialogue.

NOTICE

In ’Setting mode’ these two device functions are available for curve view:
– Store point
– Delete curve set

NOTICE

Take the following information from this window:

– A blue frame around curve and around channels' position information indicates channel selection for setting.
– Fields 'Setpoint' show setpoint position of the actuator.
– Fields 'Actual Value' show actual position of the actuator.
– 'Big' diagram shows curve progression of the selected channel.
– Yellow point with red border shows the position of selected point.

4. Change the actuator position (folding square) at the selected curve point with the buttons ▼ and ▲.
5. Select another curve point with the buttons ◄ and ►.

NOTICE

These functions are not limited to the button fields of window 'Curves fuel/air ratio'. Also use arrow keys on your keyboard.

6. Select ignition point of 'internal firing rate' 2 with button ◄.
   Display of internal firing rate in diagram window or in display field 'internal firing rate' (beside 'EI-Mode' button) shows the values which have changed.
7. Click with cursor in the small diagram 'Channel 1'.
   The data field of channel 1 gets a blue frame. Channel 1 is selected.
8. Set actuator's position for ignition position with the buttons ▼ and ▲.
9. Click on the button 'save point' to confirm.
   The point is stored.

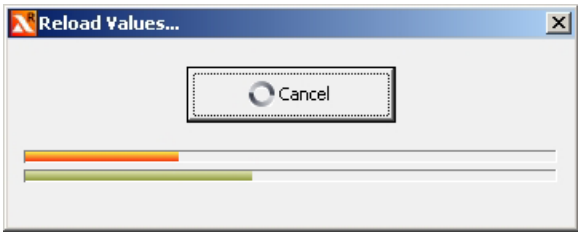

Fig. 5-77 Values are reloaded

As soon as the point has been stored the program reads data again from BT300.

10. Select stage 1 (firing rate point 200) with button ►.
11. Adjust coarse (approximate) position of the actuator for level 1.
12. Repeat process for stage 2 (firing rate point 300).
13. If ready at hand: Repeat the process for stage 3 (firing rate point 400).

The stages are coarsely adjusted.

⚠ WARNING!

The coarse adjustment of all available levels must be performed in 'cold' setting!

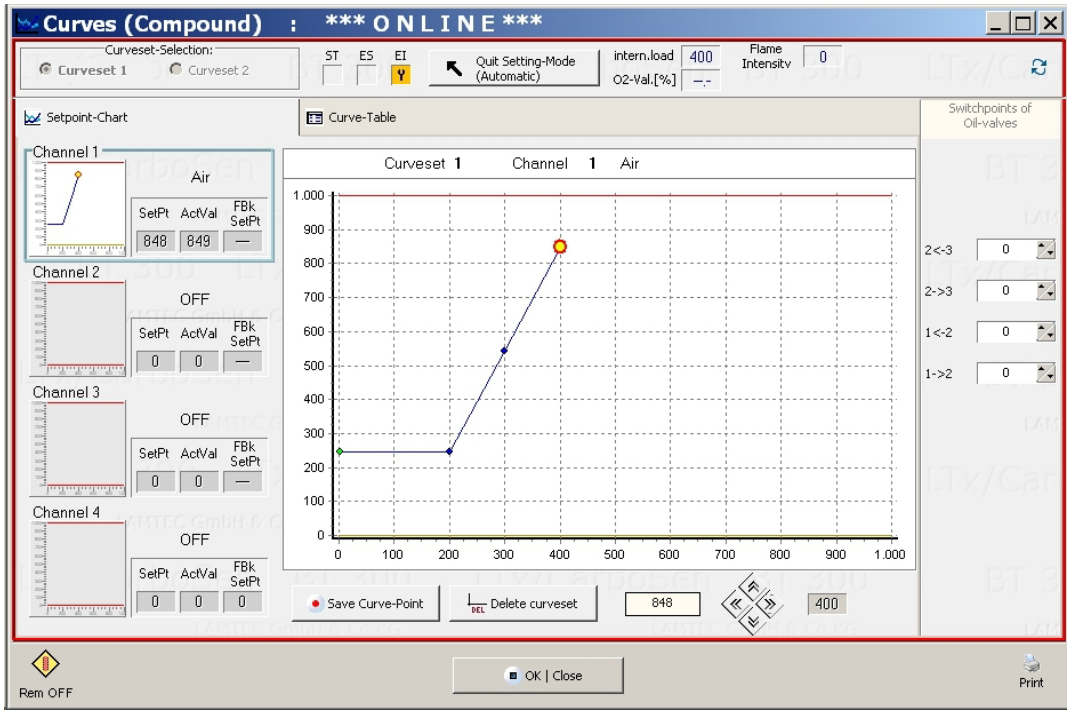

Fig. 5-78 Adjust stage operation

Adjust levels finely (warm setting)

1. Connect voltage to terminal X10 Pin2 (burner ON) to start-up burner.

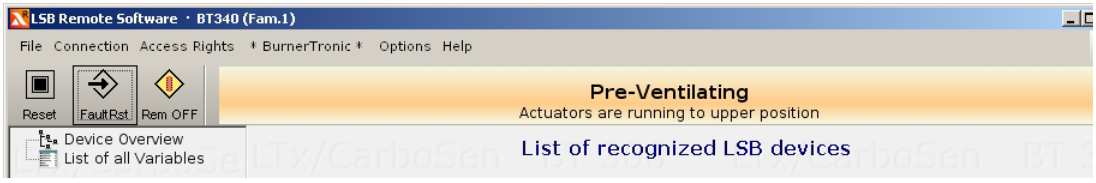

Fig. 5-79 Status field - pre-purge [setting]

2. Wait until the burner is in control mode.
3. Adjust the actuator position for ignition to ensure the flame is igniting and burning well.

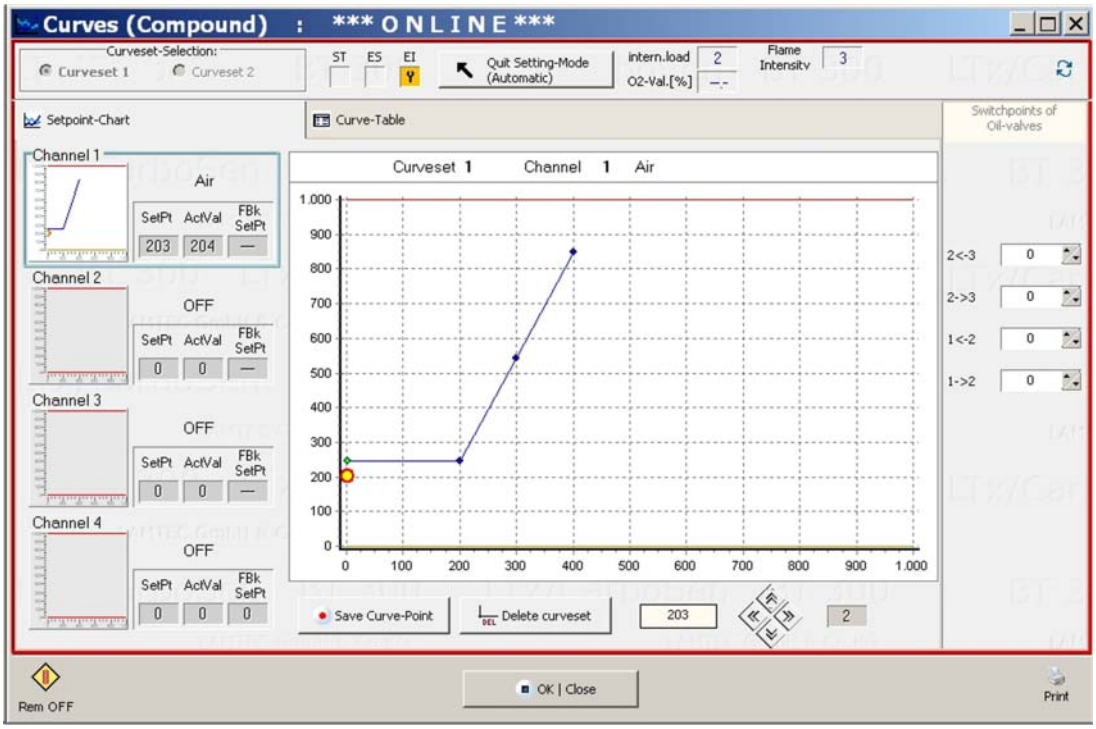

Fig. 5-80 Adjust ignition position in staged operation

4. Click button 'save point' to confirm the settings.

   The point is stored.

   Once a point has been stored, the program reads the data back from the device .

5. Click button ➤, to select 1st stage of firing rate curve.

   The 1st stage is adjusted. This is shown with firing rate point 200.

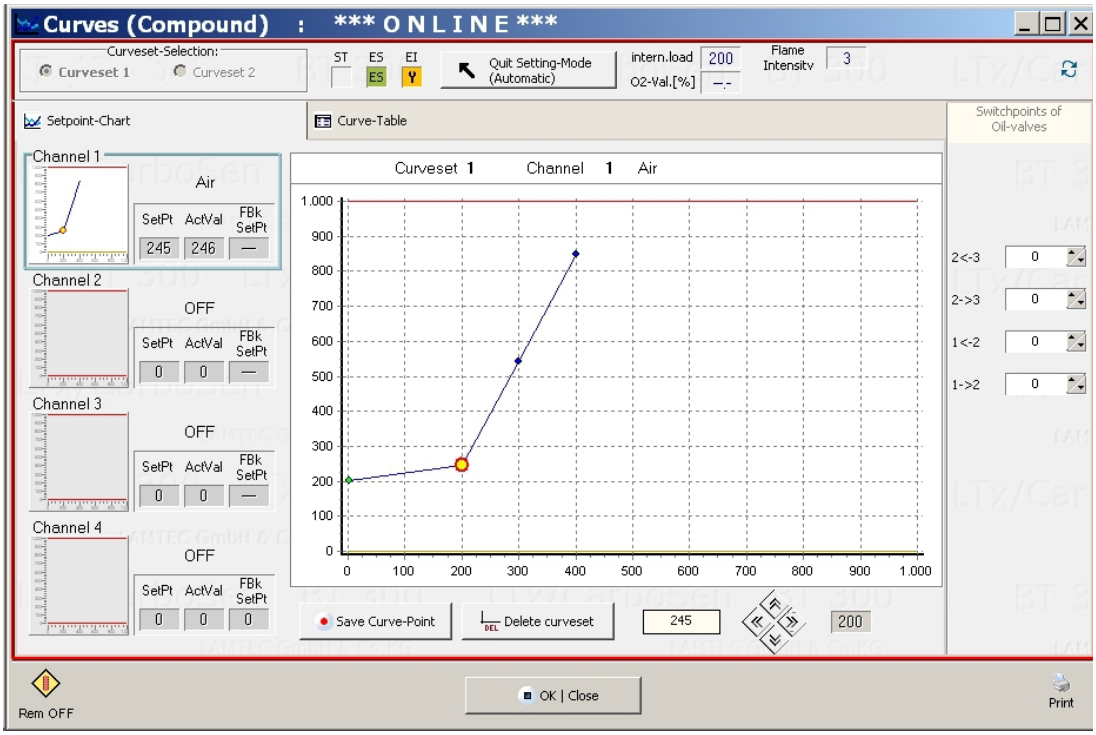

Fig. 5-81 Adjustment of 1st stage in staged operation

6. Set air position in a way to achieve the burner is burning well in any circumstances.
7. Increase actuators' position just before a flame blow-off (maximum O_2 value).

8. Enter the values in field ’1 → 2’ and ’2 ← 1’.
   Switch-on point and switch-off point of the 2nd stage are adjusted.

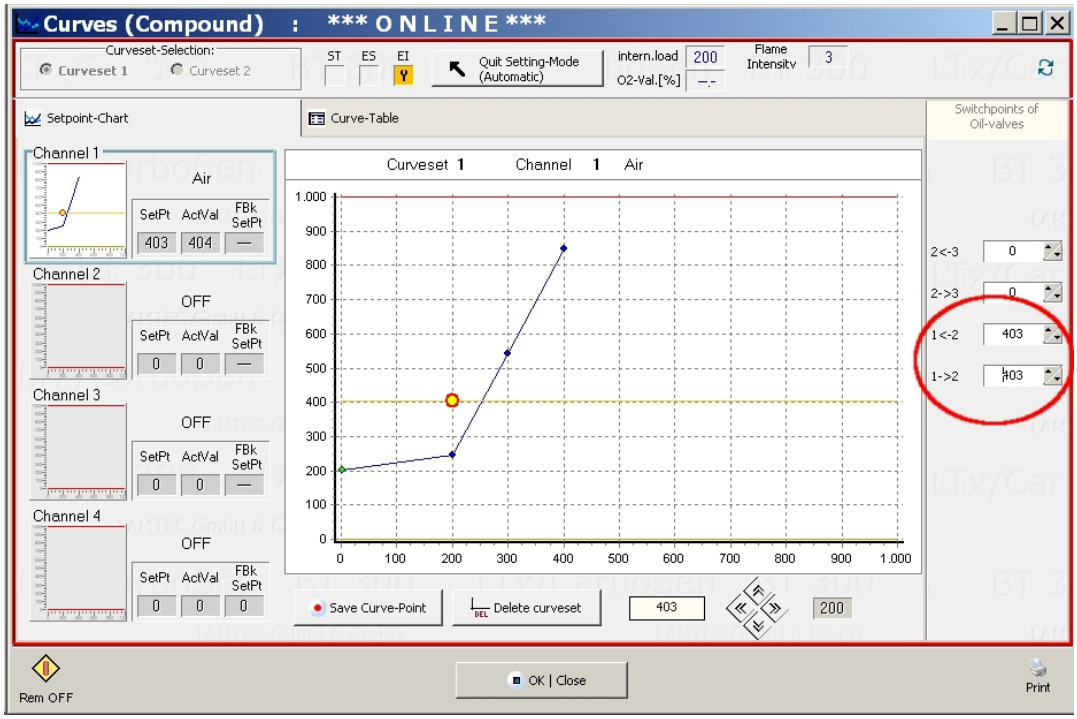

Fig. 5-82 Adjust 2nd stage in staged operation

9. Click button ➤ to choose 2nd stage of firing rate curve.
   This is shown with firing rate point 300.
10. Set air position in a way to achieve the burner is burning well in any circumstances.
11. If the burner has a 3rd stage:
    Adjust the switch-on point and the switch-off point for the 3rd stage, similarly to procedure of 2nd stage.

5.3.7 Software Interface LSB Remote Software

Previously mentioned chapters describe the most important procedures, which are necessary to configure or maintain BT300. The following chapters describe the software interface of LSB Remote Software. Menus and windows described in previous chapters are not described in following chapters. They have been given a cross reference to the affected chapters.

5.3.7.1 File

In the menu path ’file’ the following can be found

- open and save a dataset
- load or create a protected dataset
- obtain informations about a dataset
- close the application

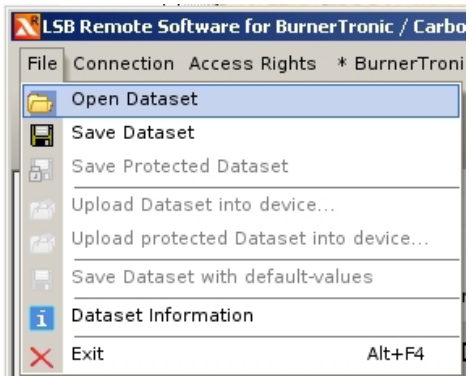

Fig. 5-83 Menu file - no connection to device

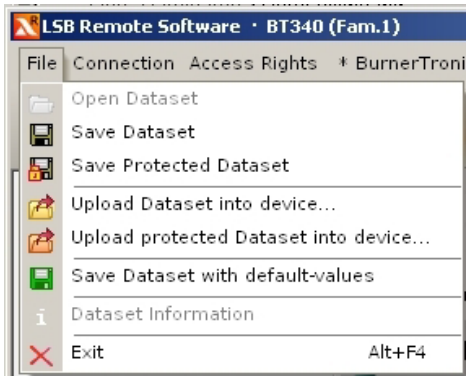

Fig. 5-84 Menu file - active connection to device

Open dataset

1. Click on menu to 'open dataset'.

   T*he window for selecting data set opens.*

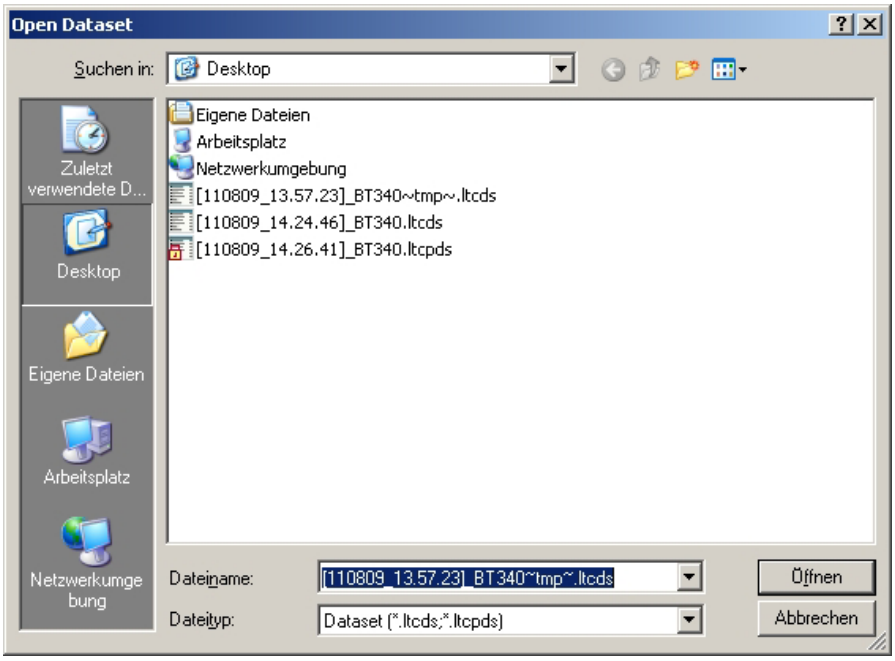

Fig. 5-85 Open dataset window
(Language of window depends on language of operating system)

2. Browse to required dataset and click button 'open'.

The dataset is loaded.

Save dataset

1. Click on menu to ’save dataset’.
   The window for saving dataset opens.

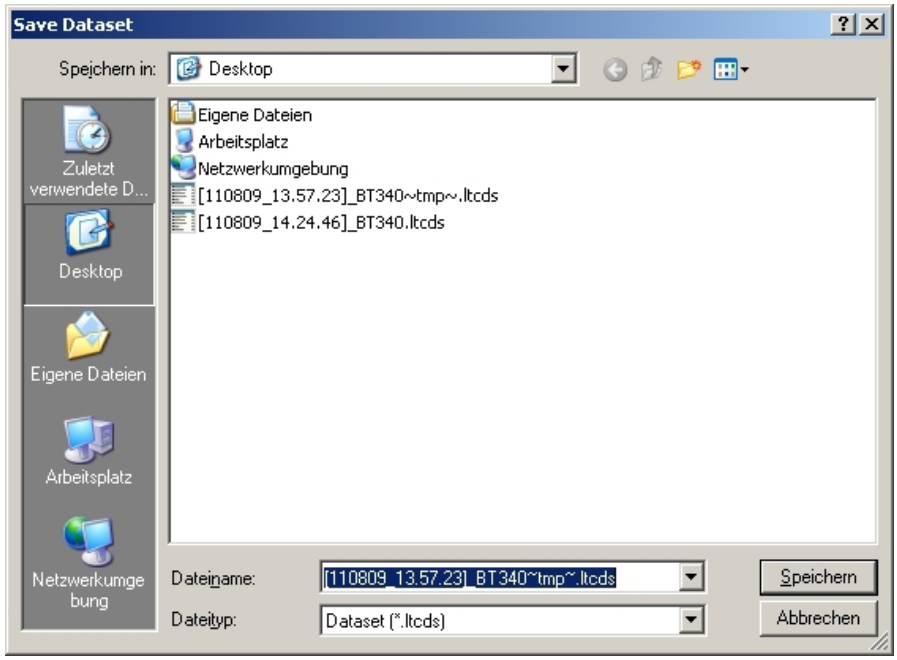

Fig. 5-86 Save dataset window
(Language of window depends on language of operating system)

2. Browse to directory you want to save your dataset to (destination folder).
3. Click on button ’save’.
   The window for entering dataset information opens.

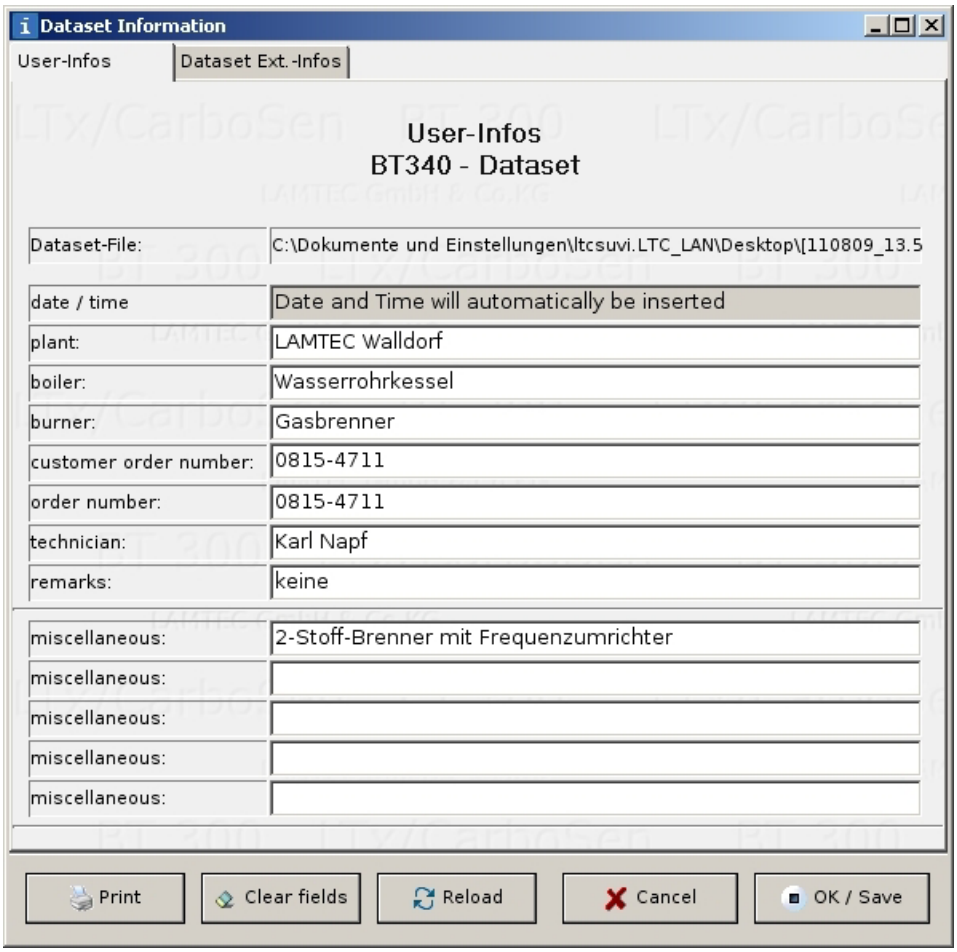

Fig. 5-87 Dataset information

4. Enter information of dataset to be saved in text boxes.

- Button 'Print' → print of information.
- Button 'Clear fields' → deletion of all entries in text boxes
- Button 'Reload' → loading information of actual dataset
- Button 'Cancel' → abort operation and closing window
- Button 'OK/Save' → saving entries
- Tab 'Dataset Ext.-Infos' → showing additional information of dataset. Information in this window cannot be edited.

NOTICE

Save a dataset of all data which can be accessed by permission (access level). The dataset can be modified depending on the access level.

Save protected dataset

1. The same procedure as saving dataset.

NOTICE

Saving a protected dataset includes all data independent of the actual permission (access level). Modifying a protected dataset is not possible.

A protected dataset can be read into the device, irrespective of the actual access level.

Upload dataset to device

1. Click on menu to "Upload dataset into device".

   Window for opening dataset opens.

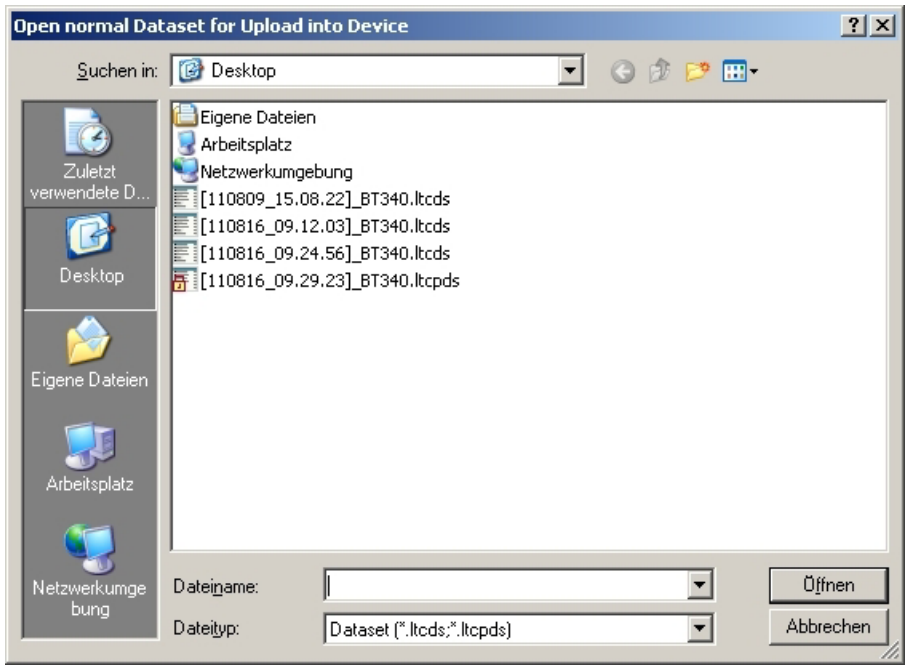

Fig. 5-88 Upload dataset to device
(Language of the window depends on language of operating system)

2. Browse to dataset you want to load and click on button "open".

   The window "dataset information" opens (see "save dataset").

3. Click on button "OK/Save".

   The Dialogue is displayed: "Which values do you want to write?"



Fig. 5-89 Selection of values

4. Activate required option in this dialogue and click on button "OK".
5. Read a note following this step and confirm with "OK".

NOTICE

Make sure that hardware configuration of remote device is identical to configuration of device where dataset is taken from.

Otherwise the device will not work properly.

6. Document parameter changes on the device and confirm with "OK".

NOTICE

It is obligatory to document all parameter changes on the device.

Note at least the date and the name of dataset.

The dataset will be transferred.

7. Confirm message "Please CRC(s) receipt" with "OK".

NOTICE

Without confirmation or cancellation the device will remain in blocked mode.

NOTICE

To save a protected dataset the same way as a "normal" dataset, changes only parameters up to the actual access level!

A success message is displayed.

8. To ensure all changes becoming effective, reset the device.

Load protected dataset into device

1. Click in menu on "Load dataset into the device".
2. Proceed as described in same section of "Load dataset into the device".

Save dataset with default-values

1. Click in menu on "Save dataset with default-values".
2. Proceed as described in same section of "Save dataset".

Open dataset informations

1. Click in menu on "Dataset information".

The information window opens.

NOTICE

This menu item is active in offline-operation only. You are able to read information but not edit. Information of currently loaded dataset is shown.

Close application

1. Click in menu on button "Close".

The application is closed.

5.3.7.2 Access Rights

In menu path ’access rights’ you can

- enter password for access level
- change password for access level 1
- change customer ID one time for each device



Fig. 5-90 Menu access rights

Enter password

1. The description, how to enter the password see chapter *Enter Password*

Change password for customer-level 1

1. Click in menu on 'change password level 1'.
   The window for entering a new password opens.



Fig. 5-91 Change password for customer-level 1

2. Enter your new password.
3. Repeat new password and click on button 'writing into device'.

The password for access level 1 has been changed.

Change customer ID

1. The description how to change the customer ID see chapter *5.3.1.5 Release Codes/Release Levels*.

5.3.7.3 BurnerTronic

In menu path 'BurnerTronic' it is possible to

- read parameters and edit their values (depending on access level)
- edit curves
- obtain fault history
- check status of inputs and outputs
- set single outputs with cold check (depending on access level)
- get information on device

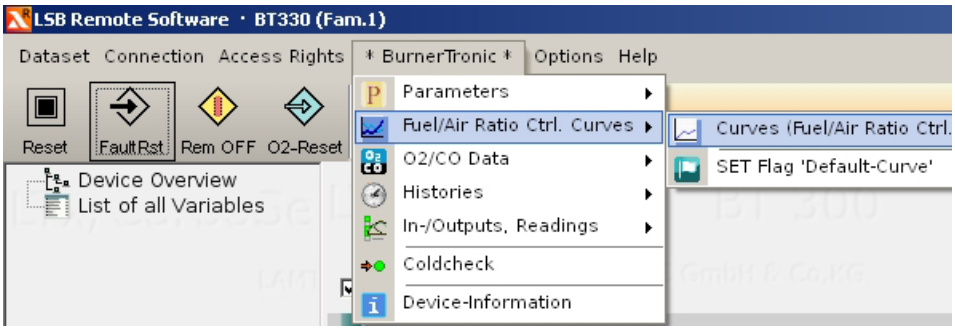

Fig. 5-92 Menu 'BurnerTronic'

Parameter

1. Find the description how to read or change parameters in chapter *Edit Parameter*.

Reading level CRCs

1. Click in menu on 'Parameters' >> 'CRCs level'.

The window with CRC16 checksums of all level opens. The calculated parameters and the parameters of the remote device are compared. Compare, if they both match.

Curve dialogue

1. Find a description of the curve dialogue in chapter *5.3.4.3 Set Curve*.

Check digital inputs

1. Click in menu on 'Input/Output' >> 'Digital inputs'.

The window 'Digital inputs (BurnerTronic)' opens.

The current state of digital inputs of the remote device are indicated.

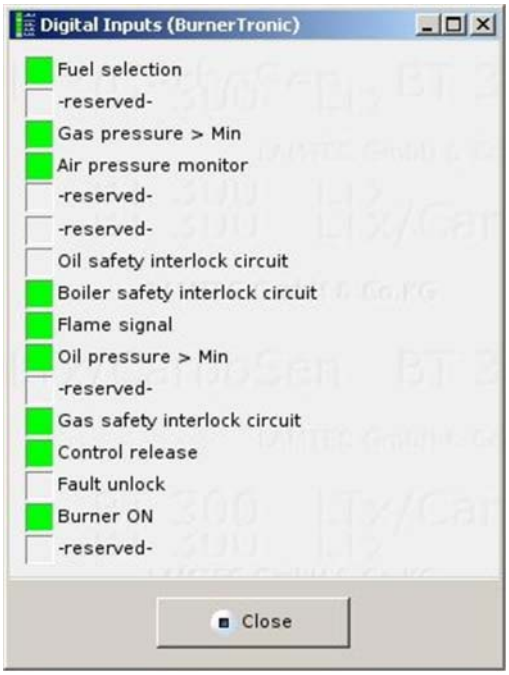

Fig. 5-93 Status of digital inputs

Check digital outputs

1. Click in menu on 'Inputs/Outputs' >> 'Digital outputs'.

The window 'Digital outputs (BurnerTronic)' opens.

Get the current status of digital outputs of remote device.

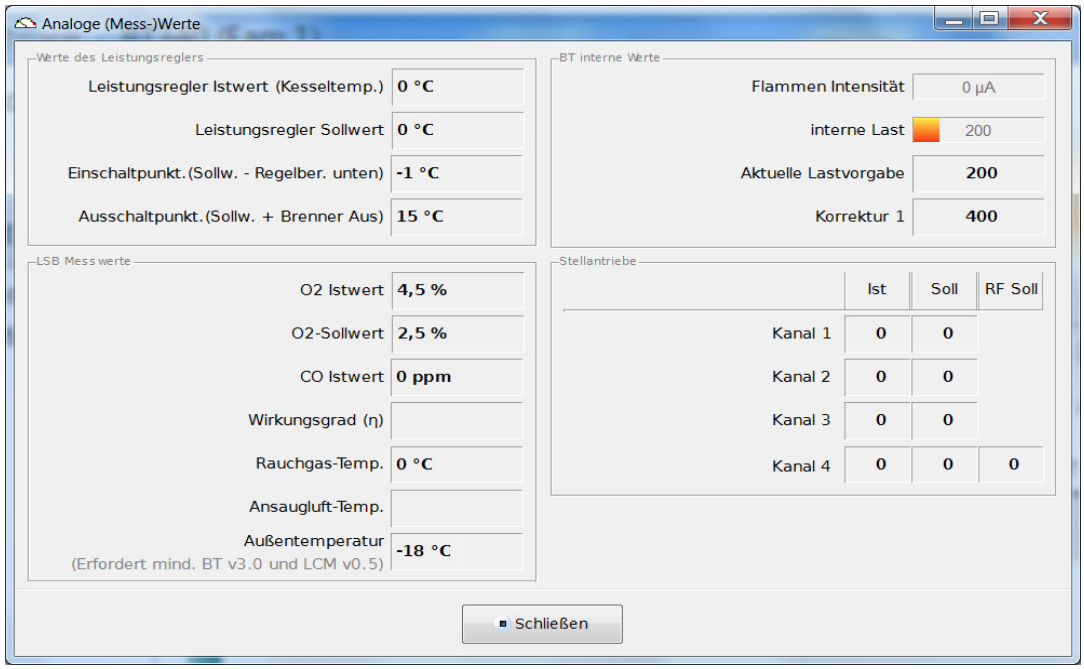

Fig. 5-94 Status of digital outputs

Proceed cold check (check digital outputs)

1. Click in menu on ’Cold check’.

   The dialogue to proceed the check of outputs starts.

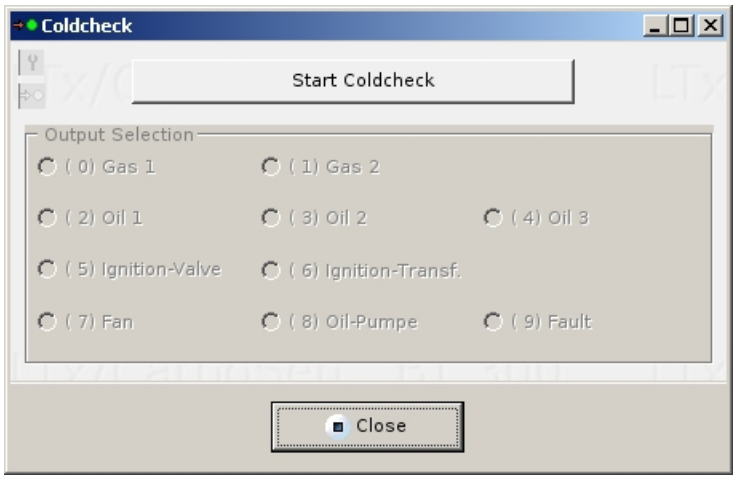

Fig. 5-95 Start cold check

2. Start cold check via button ’Start cold check’.
3. To start settings confirm the message with OK.

NOTICE

Not confirming this message during default time with OK, aborts the process.
The process can be repeated immediately.

4. To activate cold check mode confirm message with OK.

NOTICE

Not confirming this message during default time with OK, aborts the process.
The process can be repeated immediately.

Cold check mode is activated now. To illustrate this status, the choice box of outputs receives a red frame.

5. Select the output to be activated.
6. To activate the output confirm message with OK.

NOTICE

Not confirming this message during default time with OK, aborts the process.
The process can be repeated immediately.

The chosen output will be activated.

NOTICE

Activating just one output at a time is valid. As soon as another output in the output selection field is selected, the active output selected earlier will be reset.

7. Click button 'Close cold check' to finish cold check. The window remains open.
8. Click button 'Close' to close window. This terminates cold check.

Device-Information

1. Click in the menu on 'Device-Information'.

The window device-information opens. Information about the remote device is indicated.

5.3.7.4 Options

In menu path 'Options' it is possible to

- flash the system memory of the remote device
- connect and disconnect LSB module
- change LSB remote software language (currently EN and DE is available)
- enter activation code for LSB remote software

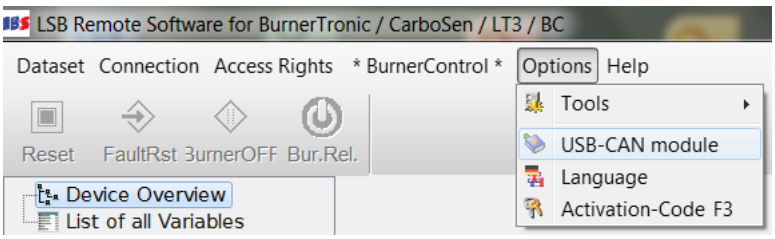

Fig. 5-96 Menu options

Flash DLL client

1. Click in menu on 'Tools' >> 'Flash Tool'

The window 'Flash DLL Client' opens.

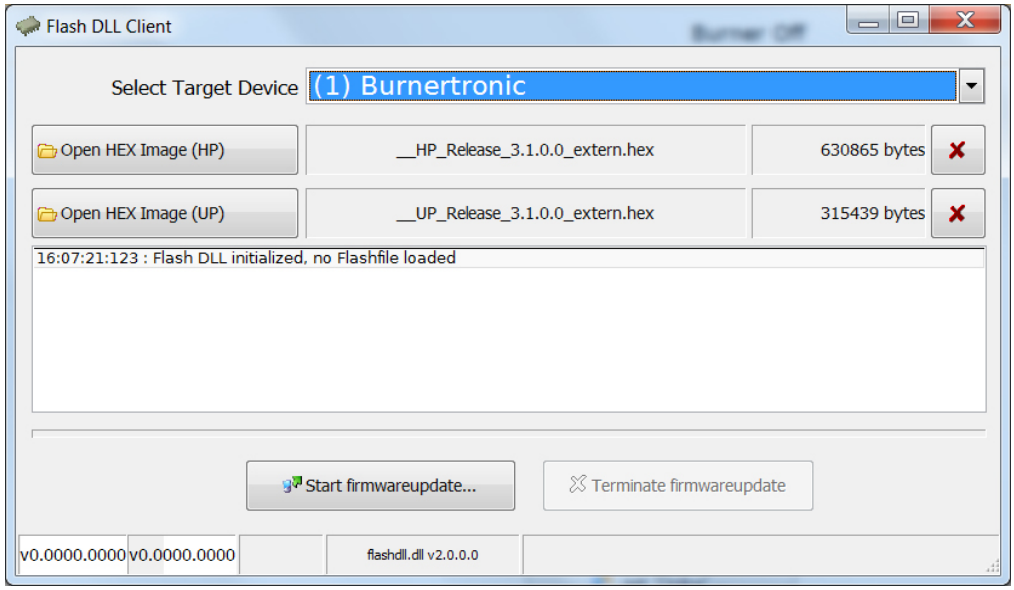

Fig. 5-97 Flash DLL client

For more information see chapter *6.2 Firmware Update BT300* and chapter *6.3 Firmware Update UI300*.

USB-CAN (Systec)

1. Click in menu on 'USB-CAN (Systec)'.
   The USB-CAN window opens.

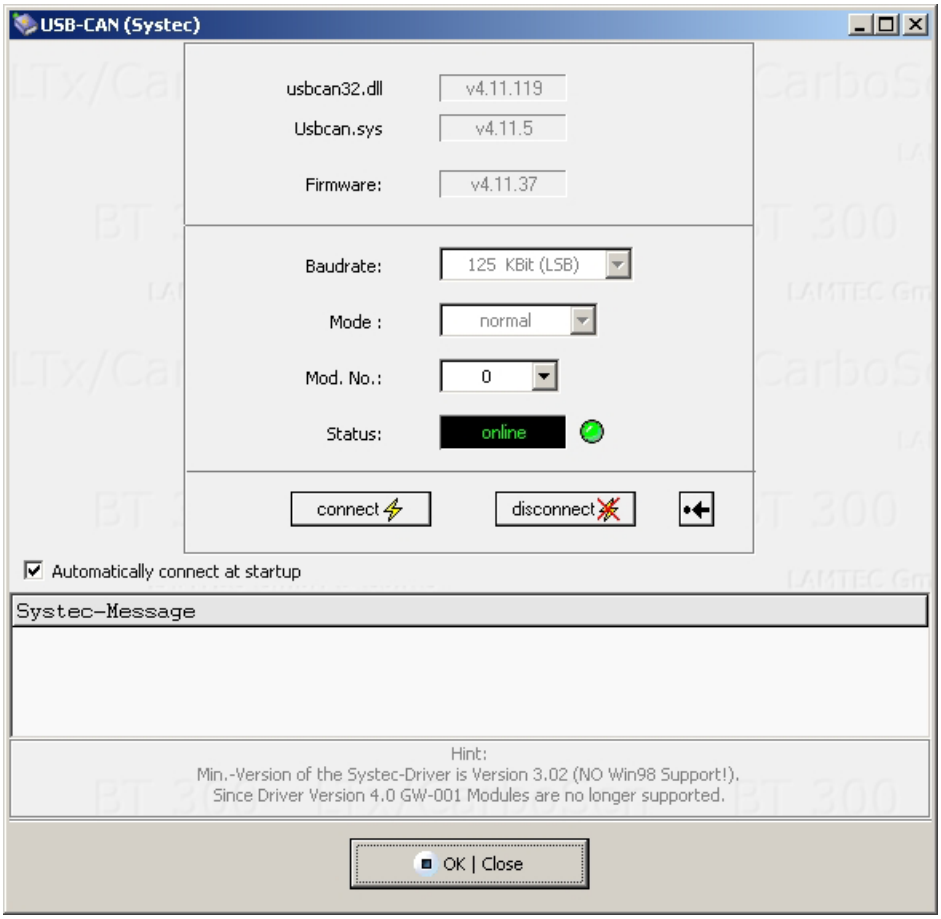

Fig. 5-98 USB-CAN (Systec)

2. Click button connect to establish a connection to LSB module.
3. Click button disconnect to interrupt connection to LSB module.
4. Click button , to reset uncritical faults.
5. Activate option 'Automatically connect at start-up' if you want to establish an autocratically connection to LSB module at every start-up.
6. Select a LSB module in drop-down menu 'Mod.No'.
   a) To use different LSB modules set the pre-settings with the Systec software.
   b) To select LSB module click on '255' at the end of the drop-down menu.
      All available modules will be marked in brackets '><'.
   c) Select the required module.

Select language

1. Click in menu on ’Language’.
   Language selection window opens.

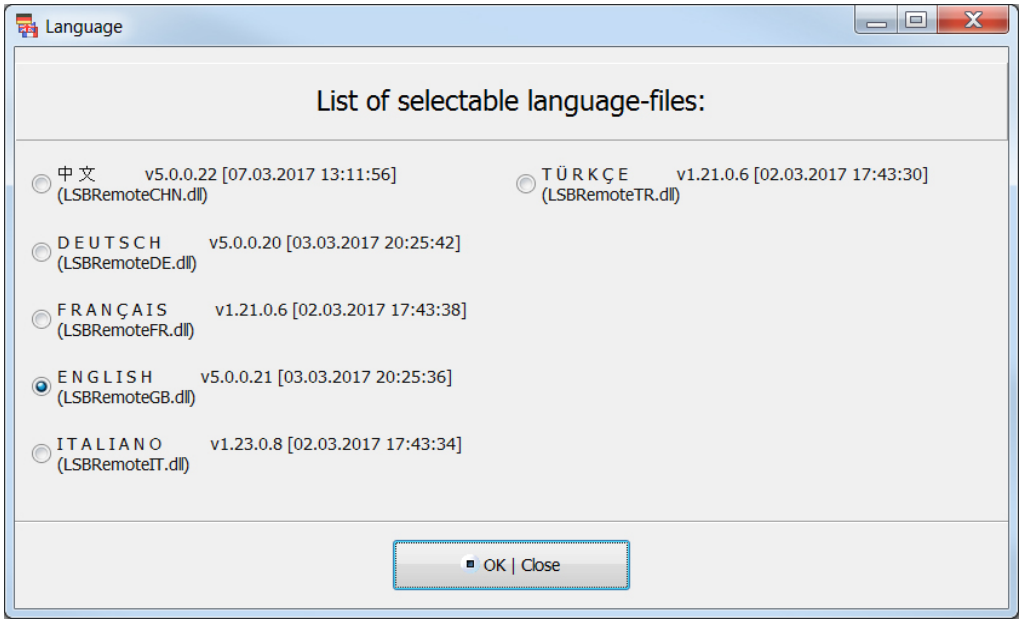

Fig. 5-99 Changing language

2. Select language of LSB remote software and confirm with ’OK’.

Activation Code

1. Click in the menu on ’Activation Code’.
   Activation Code window opens.

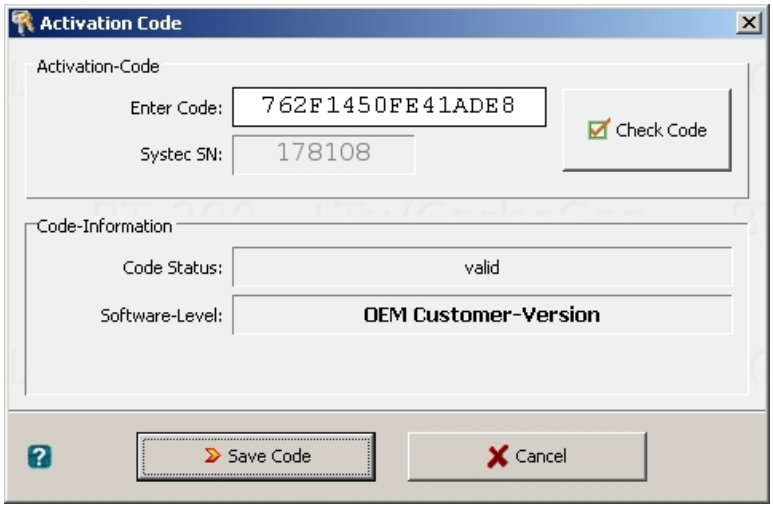

Fig. 5-100 Code activation

2. Enter activation code and confirm with ’Save Code’, to store activation code.
3. Click on button ’Cancel’ in order to interrupt the process and close the window.
4. Use button ’Check Code’ to check validity of your activation code.

5.3.7.5 Help

In menu path ’Help’ it is possible to

- call up help to LSB Remote Software
- get information about version of LSB Remote Software

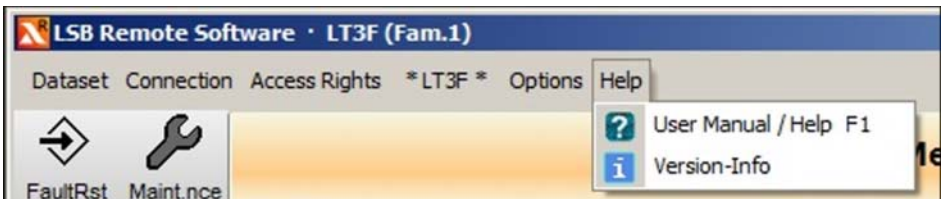

Fig. 5-101 Menu help

Getting help

1. Click in the menu on ’LSB Remote Software/User Manual F1’.

The BT300 manual opens.

Information on version

1. Click in menu on ’Version-Info’.

You get information about the version of LSB Remote Software.

6 Maintenance

6.1 BT300 Data Back-Up

At any time, you are able to create a protected data set (DS) for storage (back up) of current status of device. Therefore you must set LSB remote software to online mode.

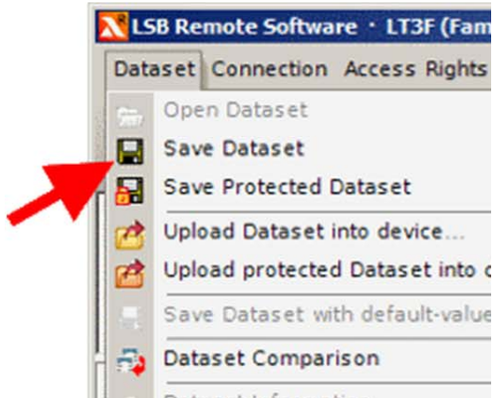

Fig. 6-1 Select the protected dataset menu

In contrast to a 'normal' data set the protected data set includes storage of check sums of parameter values (etc.). These Data ensure that a a data set cannot be modified afterwards.

Another distinctive feature (to normal data set) is while protected data sets are written into BT300 every parameter of the data set will be overwritten independently from current access level! By import of a 'normal' data set just parameters within current access level are overwritten.

NOTICE

Ensure that the customer ID of the device is stored in the protected data set. When loading a protected dataset to BT300, the system prompts for this customer ID. Therefore it is not possible to transfer the protected data sets to devices of any other company.

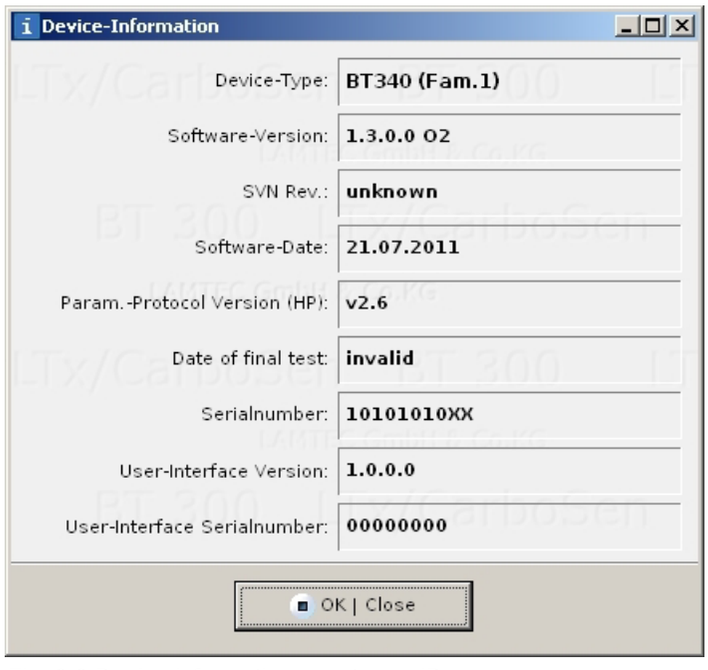

Fig. 6-2 Device information - customer ID

ПРОМЭЛЕКТРОНИКА / sales@prom-elec.com

6.2 Firmware Update BT300

NOTICE

Firmware Updates can only be processed with LSB Remote Software version OEM-Level and higher.

NOTICE

To switch OFF the burner before starting the firmware update via LAMTEC SYSTEM BUS is mandatory!

NOTICE

Only one device of the same type as the one you want to update may be connected to LAMTEC SYSTEM BUS (p. ex. LCM100). This device must be integrated in LSB family 1.

NOTICE

Check the safety functions after every update!

Firmware Update

✓ Release Level 2 necessary

1. Connect LAMTEC SYSTEM BUS to your computer and start the LSB Remote Software.
2. Establish online connection.
3. Store dataset.
4. Disconnect online connection.
5. Select Flash Tool.

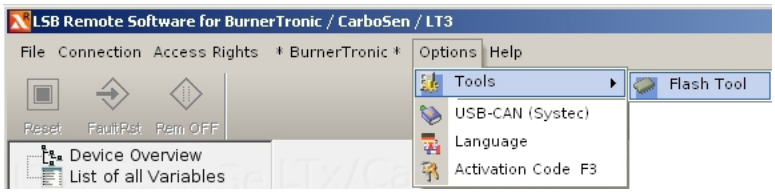

Fig. 6-3 Menu "Flash Tool"

6. Select menu 'Select Target Device' - p.ex. '(1) BurnerTronic'.

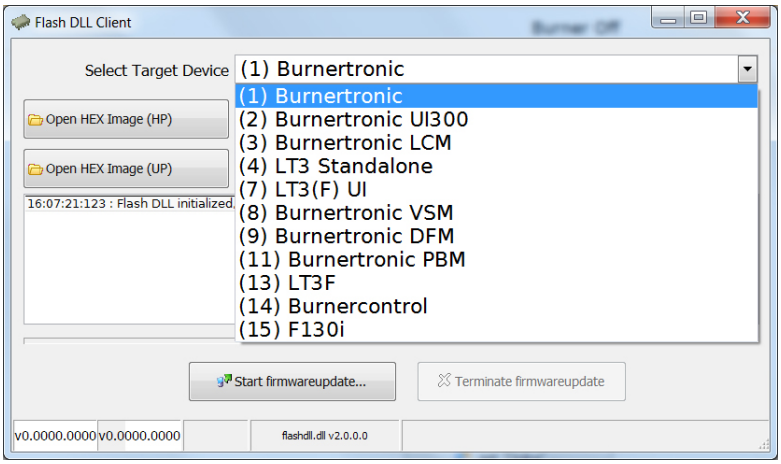

7. Click button ’Open HEX Image (HP)’ and search for the file containing the software of the main processor of the BT300 in the window ’Open HEX image’.

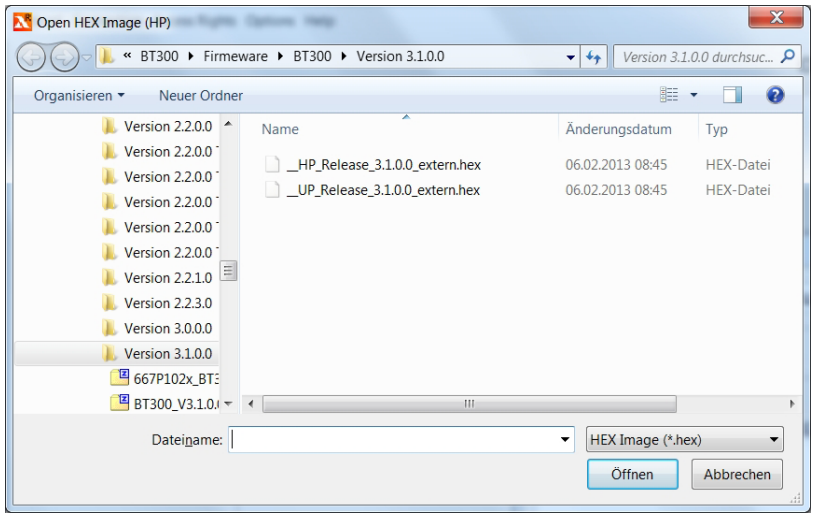

8. Repeat the procedure in no. 3 but click Button ’Open HEX Image (UP)’ and select the file containing the software of the watchdog processor of the BT300 in the window ’Open HEX image’. All other devices of the BT300 system have just one processor.
9. Click button ’Start firmware update’.

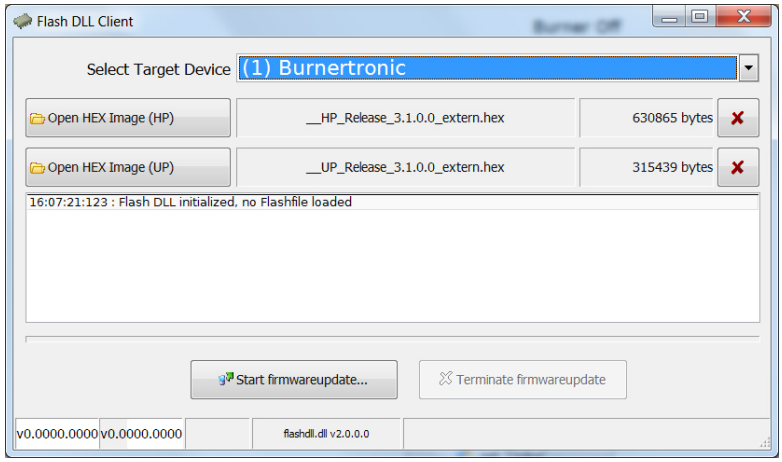

10. BT300, VSM100 and DFM300 have to be disconnected briefly from mains to start the firmware update and must be switched ON again. This procedure generates the ’Boot loader Ping’. Software version 1.11.0.0 and higher displays the following message.

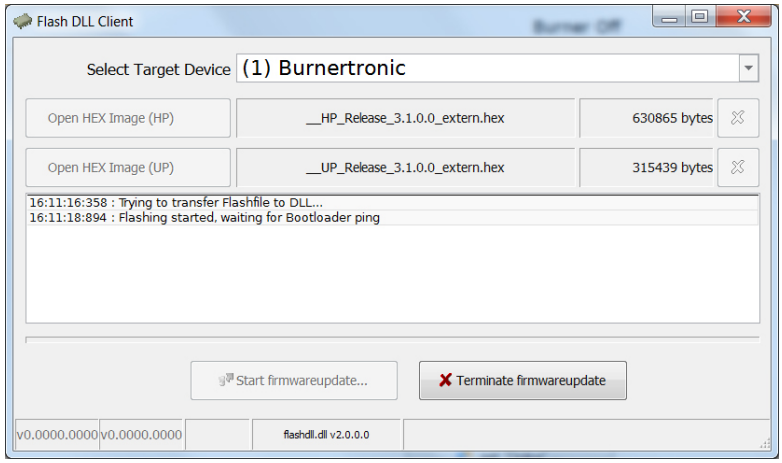

11. UI300, LCM100, PBM100 and EBM100 do not need a reset.

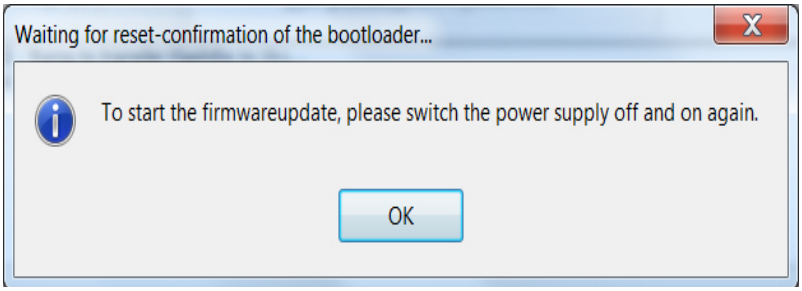

12. The progress bar shows the progress of the update.

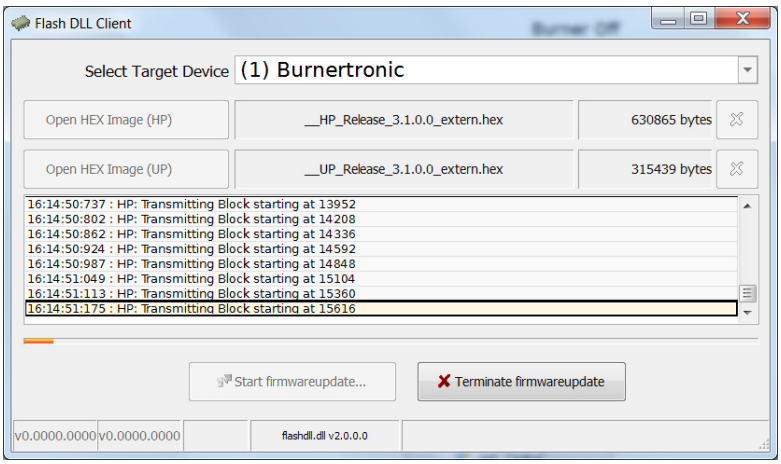

13. Software versions 1.12.0.0 and higher display a success message.

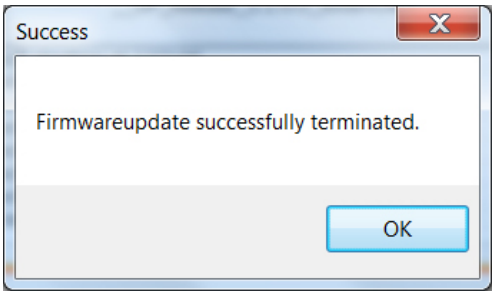

14. Software versions prior to V1.12.0.0 show the end of the update by a message from the boot loader of the respective device.

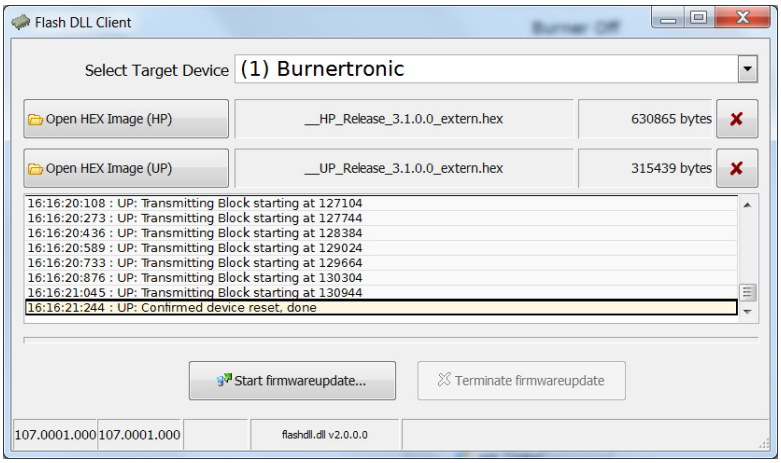

15. Close the window or select another device for updating.
16. Transfer the protected dataset which contains the default settings for the latest software version to the BT300.
17. Restore the dataset which has been stored in step 3.

6.3 Firmware Update UI300

Preparation of the UI300 firmware update

1. Connect LAMTEC SYSTEM BUS to your computer and start LSB Remote Software.
2. **Do not** set BT300 online. Switch on BT300.

UI300 firmware update

1. Process the firmware update analogue to the BT300 firmware update. Start with step 3.

NOTICE

Use the HEX image data of the UI300 to process the firmware update!

6.4 Replacing of BurnerTronic

DANGER!

Hazards due to electrical shock!

BT300'sDangerous tensions may apply to the terminals.

Before working in connection area disconnect all poles of the plant from power supply. Prevent from being switched back on and verify that plant is voltage-free. There is a risk of electrical shock when plant is not switched off.
The cover of the BT300's mounting case may be opened by trained, qualified personnel only.

WARNING!

For replacement of burner control units take special precautions. Failure to observe the safety instructions may result in dangerous conditions and malfunctioning.

Transferring data to new burner control

1. Keep protected dataset of the plant ready where you wish to exchange BT300.
2. Make sure that the BT300 is the same type/mode or a superior grade one and has the same customer ID as the BT300 to be replaced (origin of protected data set).

NOTICE

To ensure a faultless functioning make sure that the same types/models or a superior grade one are used.

3. Always select the protected data set corresponding to the plant.
4. To activate new settings after protected data set is accepted, interrupt power supply and restart BT300.
   The imported data set will set all device parameters. The safety-relevant parameters must be checked on-site before the device is commissioned.

NOTICE

Check the safety-relevant parameters on-site before commissioning the device.

7 Options

7.1 Firing-Rate Controller Module LCM100

The LCM100 adds the function of a firing rate controller to the BurnerTronic. Additional components of the module are:

– An integrated power supply for external 24 V consumers (sensors, additional BurnerTronic expansion modules)
– A LSB interface for connecting additional LSB devices
– A 4 ... 20 mA monitor output, for internal firing rate
– Digital pulse counter inputs for calculating fuel consumption
– A Pt100/1000 input for measuring flue gas temperature
– Socket for connection of BT300 service software

The firing rate controller offers the option of controlling temperature (Pt100 or Pt1000) or steam pressure (4 ... 20 mA pressure sensor). The LCM100 also offers the option of a setpoint shift depending on outside temperature (control by atmospheric condition). If the control by atmospheric condition function is not in use, 2 programmed setpoints can be controlled using a digital 24 V input.

LCM100 insulates the LSB from BT300's mains potential.

Set the configuration of the connected flame-sensors with DIP switches.

The burner firing rate controller function can be disabled, if required. In this case the regular firing rate input can be controlled either by a 4 ... 20 mA, 0 ... 10 V or a three-point step (TPS), input.

NOTICE

For a precise adjustment consider parameters 40 - 60. For more information regarding these parameters refer to document 'Commissioning Supplement Parameter List' (DLT1204).

NOTICE

When using a manual regular firing rate input the firing rate controller must be activated.
P 40 = 1 or 2 (up to version 1.3.0.0)
P 40 = 3 (version 1.4.0.0 and higher).

7.1.1 Range Limits

You must set limit values in the parameters, switching the burner on and off. After a burner shut-down while actual temperature has not reached the switch-on threshold yet, a display will inform you that firing rate controller is refusing a start-up.



Fig. 7-1 Message Start-up denied

7.1.2 Enter Setpoint of Firing Rate Controller

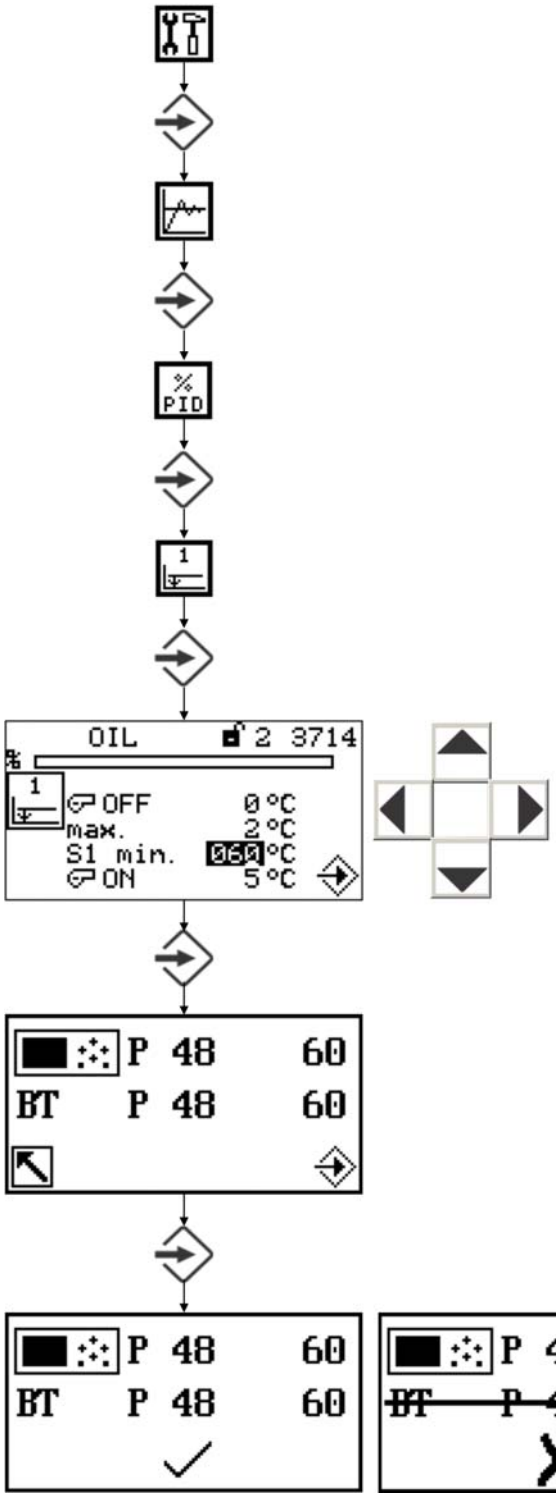

Use the arrow keys to select switching point (ON or OFF) and to set switching point afterwards.

If you confirm settings with ENTER in a preset time slot, the value is stored in the parameter. Otherwise the changes value is discarded.

7.1.3 Operating Description

The burner start-up is carried out as described above. At least 'Burner ON' signal and 'Release' must be sent by firing rate controller.

The burner starts as soon as it is receiving signals 'Burner ON' and 'Release' from firing rate controller. The firing rate controller is in operation not before the burner is running and the signal 'Control Release' is pending.

The default value of firing rate for fuel/air ratio control is set via integral firing rate controller. Depending on the difference between actual and setpoint value and adjusted control parameters this default firing rate value is set. When actual value is exceeding to maximum value the firing rate controller switches OFF combustion.

The firing rate controller is active in AUTOMATIC mode only.

7.1.4 Control by atmospheric conditions and external setpoint presetting

Control by Atmospheric Conditions

If burner firing rate controller is configured as 'controlled by atmospheric conditions' the setpoint value can be shifted between the parameter set setpoint minimum and setpoint maximum by connecting another Pt100/Pt1000 temperature sensor to the terminals 25, 26 and 27. The controller by atmospheric conditions outside temperature is part of setpoint calculation. As a result the operator is able to set minimum and maximum setpoint values determining final setpoint value by outside temperature.

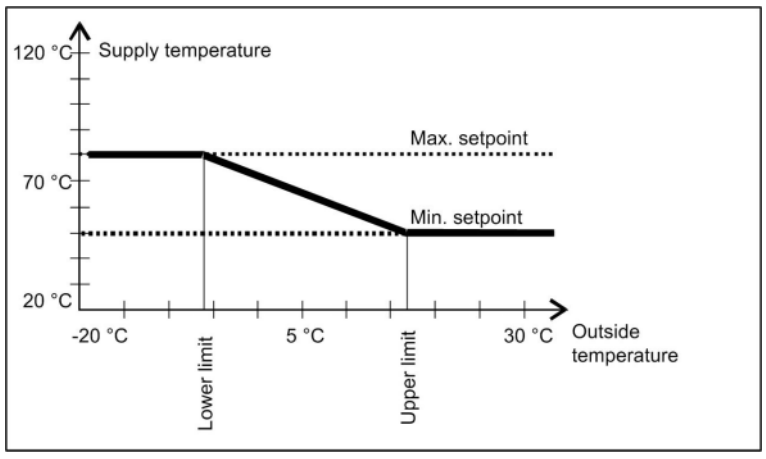

Setpoint:

Value min	P 48/50
Value max	P 49/51
Lower limit	P 52
Upper limit	P 53

Fig. 7-2 Control by atmospheric conditions

With activated option 'Control by atmospheric condition' you may also implement external setpoint pre-setting.

External Firing rate Input

You can establish an external firing rate input if control by atmospheric conditions is activated. Therefore you must short-circuit terminals 25 and 26. Connect at terminals 16 and 17 a 0/4 ... 20 mA signal for setpoint presetting. Now you can adjust setpoint between a maximum value at 0/4 mA and a minimum value at 20 mA. If you use setpoint switching, the range of external setpoint switching is shifted.

External Setpoint Presetting

For the external setpoint values to be activated, parameter 40 must be set to the value 2 (control by atmospheric condition). The terminals 25, 26 and 27 must be short-circuited. At terminal 16 (-) and 17 (+) of the LCM100, a 0/4 ... 20 mA would be connected.

Lower limit	P 52
Upper limit	P 53

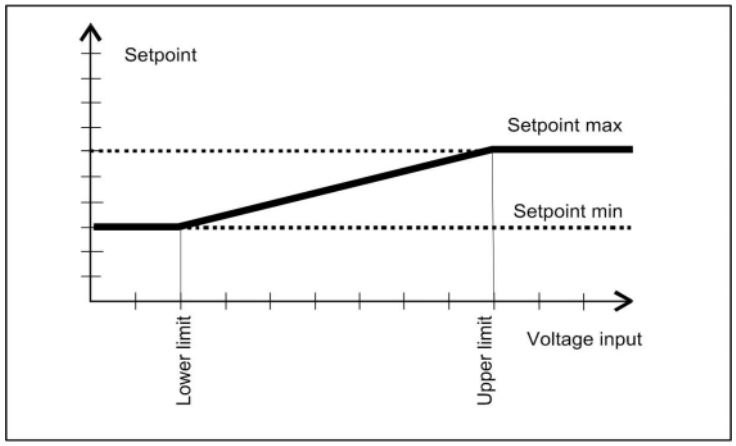

Fig. 7-3 External setpoint values

The following parameter must be set:

Parameter:	
0040	2; control by atmospheric condition/setpoint shift
0052	0; in the usage of 0 ... 20 mA at the setpoint input
0052	40; in the usage of 4 ... 20 mA at the setpoint input
0053	200
0048	Setpoint 1 which should be set with 0/4 mA at setpoint input
0049	Setpoint 1 which should be set with 20 mA at setpoint input
0050	Setpoint 2 which should be set with 0/4 mA at setpoint input
0051	Setpoint 2 which should be set with 20 mA at setpoint input

Parameter 0051 and 0052 are necessary only in case a setpoint changeover is required.

7.1.5 Setpoint Changeover

You can switch setpoint via input at terminal 5. When you use a version with fixed setpoint value you are able to select through this contact one of two values listed in parameters P0048 and P0050 with this contact.

While control by atmospheric conditions is activated additionally you are able to select between two pairs of limit values (see control by atmospheric conditions and limit ranges). Parameters for setpoint 1 (for setpoint switching) and setpoint min 1 (for control by atmospheric conditions) are the same. Similarly, parameters setpoint 2 and setpoint min 2. The corresponding content is assigned accordingly to selected configuration.

While ’control by atmospheric conditions’ is activated and parameters are set correspondingly you may also implement an external setpoint default. This means setpoint values can be adjusted via potentiometer (or switched through resistors) manually or automatically. By connecting a change-over switch, you can implement a night-time reduction instead of ’control by atmospheric conditions’. A ’control by atmospheric conditions’ in combination with night-time reduction is also possible. In order to achieve this combine the control by atmospheric conditions with setpoint switch over.

7.1.6 Start-up Sequence

The firing rate controller has a start-up cycle in order to slow down burners' firing rate while starting. The start-up cycle is passed during each new burner start. The internal firing rate is held at user-adjusted value (P 0044) as long as the boiler is cold. The actual value is below parameter set limit (P 0043. If controllers' actual value is larger/equal to the parameter set start-up maximum temperature, this startup cycle is cancelled.

In order to prevent that too large power demand of the plant having the consequence that boiler temperature for ending start-up cycle is not reached, in parallel a startup timer is also triggered in parallel (timer adjustable by operator, P0045). As internal firing rate reaches parameter set start-up firing rate, output is increased linearly step-by-step up to maximum firing rate. The rise of this linear increase is calculated from parameter set start-up time.

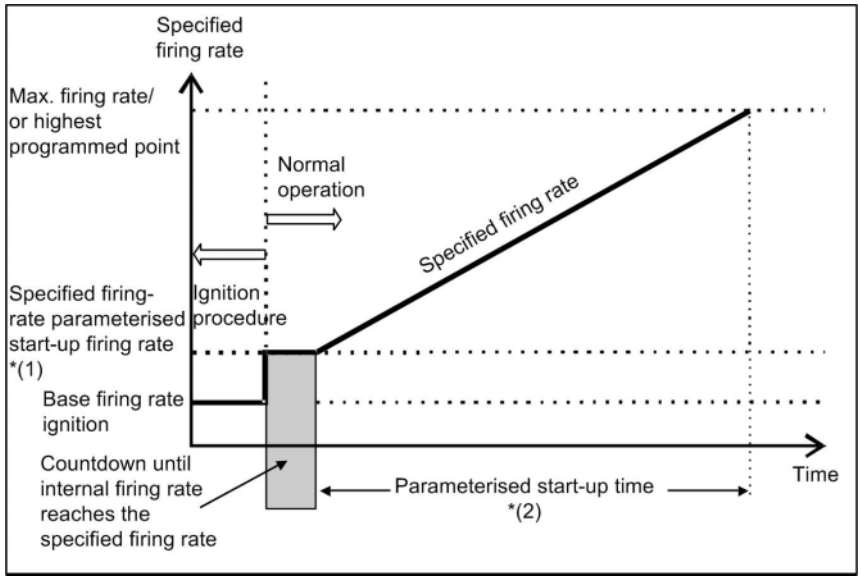

*(1) = P 0044

*(2) = P 0045

Fig. 7-4 Start-up sequence

7.1.7 Thermostat and Control Range

The thermostat function switches burner on and off on basis of temperature and/or pressure value. At first, the burner must be released by starting signal. Control range is formed by entering controller setpoint value, parameters P 0054 (switch-on point), P 0055 (upper control range) and P 0056 (burner OFF). The shut-off hysteresis is divided into 2 ranges. The first part is located above setpoint forms the upper control range. Second part below setpoint forms the lower control range.

Control range is possibly located asymmetrically around the setpoint.

Below upper control range power control unit functions work according to settings made in parameters and default values.

If the control units' actual value reaches shut-down range a base firing rate request is emitted. While setpoint of control units exceeds shut-down range a control shut-off occurs. This done by internal processing. If the actual value drops below lower control range, a re-start can happen.

NOTICE

This function may replace the control thermostat, which is required on the plant.

It does not replace a safety thermostat.

7.1.8 Control Range

The control range is located around setpoint. The content of ’burner ON’ parameter is subtracted from setpoint to form switch-on value. ’Upper control range’ parameter value (P 0055) is added to setpoint to form the upper limit of control range. The control range may therefore be located asymmetrically around setpoint.The shut-off range is limited by ’Burner off’ parameter (P 0056). The parameter is added to the setpoint. If this value is exceeded a burner shut-off is initiated.
The range between ’Upper control range’ and ’Burner OFF’ is forming the shut-off range. If the actual value reaches this range fuel/air ratio control changes to base firing rate. Another consequence is that ’Burner OFF’ value is in general higher than the one of ’Upper control range’ value. In all other cases there is no shut-off range and burner is immediately shut-off when reaching limit.
The burner 'ON' switching point can also be located above setpoint. In this case P0054 has to be set negative (< 0).

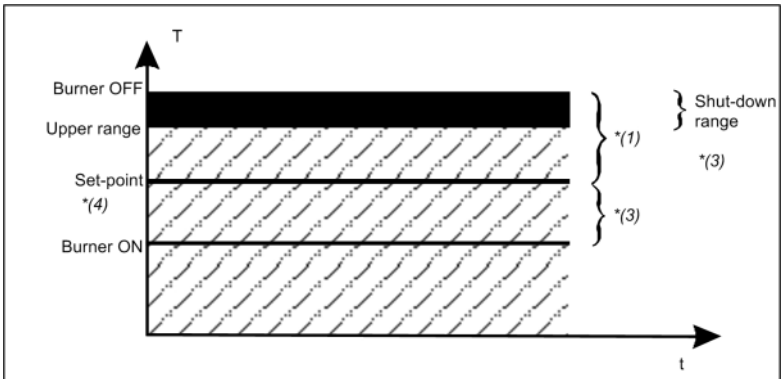

*(1) = P 0056
*(2) = P 0055
*(3) = P 0054
*(4) = P 0048 - 0051

Fig. 7-5 Control range

7.1.9 Checking the Safety Limiter

For testing purposes of the safety limiter change the setpoint. This also causes a change in shut-off range as well. The safety limiter can therefore be overrun in manual mode.

7.1.10 Control Mode

The firing rate controller is attempting to adjust actual value to setpoint value. A direct correlation is assumed between internal firing rate and boiler temperature, i.e. the higher the internal firing rate, the faster boiler the rise of temperature. If curves are programmed in a different way the firing rate controller will not operate.
Four parameters define the control characteristics:

- **Adjustment time**
  Adjustment time defines the intervals of deviation is checked and a new adjustment is determined.
- **P term**
  The proportional term affects directly on deviation defined as difference between setpoint value and actual value.
  P > → higher step response
- **I term**
  The integral term is calculated from present deviation and previous deviation to setpoint

value.
I > → faster approximation to setpoint → danger of overshooting!

- **D term**
  The difference term is calculated from variation of actual values. This may result in accelerating, respectively retarding effects.

In practice adjustments of PID-controller is orientated by given controlled system. Out of characteristics of the controlled system data can be deduced, i.e. by experimental determination.

- P share, I share, D share are added up and serve as adjustments to the firing rate default of the fuel/air ratio control.
- As long as the actual value is below setpoint, P term and I term are positive, that is to say both of these terms will increase the firing rate default.
- In such a case only D term has a negative value (assuming that boiler temperature is rising). Use D term carefully because it leads to a higher burden for the actuating elements.
- In order to avoid excessive overshoot during burner start-up adjust parameters to achieve a suitably large D term.
- If despite a large setpoint deviation the burner is not run at full or base firing rate you should increase the P term.
- The longer you select the adjustment time the calmer the fuel/air ratio control. However, this also increases the actual values' deviation from setpoint value and leads to slower adjustment.

	Hot Water Installations		Steam Boiler Installations
P term	120	280	600
I term	60	360	300
D term	20	50	25
Adjustment time	15	2	20

Adjustment of the values according to the controlled system is highly recommended.

7.1.11 Aides for Setting

Characteristic	Control Process	Control Mode	Start-up Procedure
P term higher	decrease of attenuation	stronger reaction with overshoot	faster start-up with overshoot
P term smaller	increase of attenuation	less reaction, less tendency to oscillate	slower startup

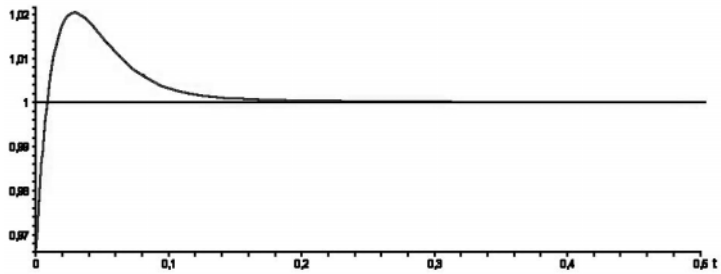

Fig. 7-6 Controller operation with P-term too high

Characteristic	Control Process	Control Mode	Start-up Procedure
I term higher	decrease of attenuation	stronger reaction with tendency to oscillate	faster start-up with tendency to oscillate
I term smaller	increase of attenuation	less reaction, less tendency to oscillate	slower start-up

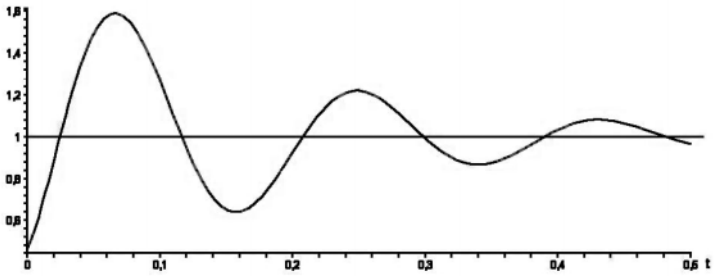

Fig. 7-7 Controller operation with I-term too high

Characteristic	Control Process	Control Mode	Start-up Procedure
D term higher	decrease of attenuation	stronger reaction	slower start-up, earlier decrease of power
D term smaller	increase of attenuation	less reaction	faster start-up, decrease of power later

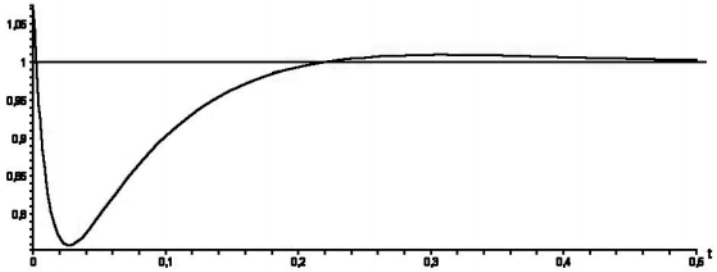

Fig. 7-8 Controller operation with D-term too high

7.1.12 External/Manual Firing-rate Presetting (Terminals 16 - 19)

In order that LCM100 interprets the inputs as external firing rate presetting, LCM must be activated by P 0040. Therefore set P0040 to value 1 or 2.
With this setting UI300 still displays setpoint value and actual value of LCM100.With software version 3.4.0.0(UI300) and 1.2.0.0 (LCM100) or higher P 0040 may be set to value 3. Setpoint value and actual value are not displayed in UI300.
Short-circuit terminal 22 with terminal 23 and terminal 24.
Select the type of firing rate presetting.

NOTICE

With software version 1.1.0.0 or higher the LCM switches automatically to TPS input if P 0065 = 2 (4 ... 20 mA) and input current <2,1 mA.
An input current of more than 3 mA ends this switch over.

Scaling:

0 V/4 mA = 0 digit internal firing rate
10 V/20 mA = 999 digit internal firing rate

Connection external/manual regular firing rate input (Terminal 16 - 19)

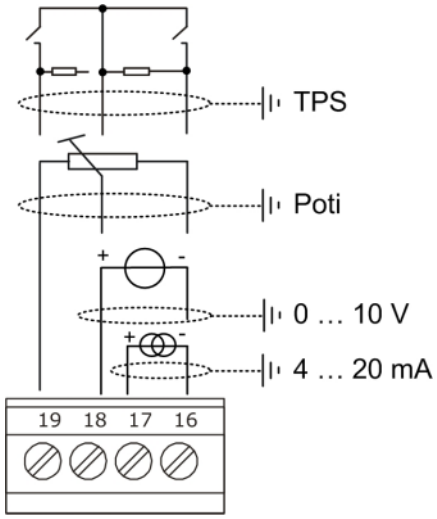

Fig. 7-9 Connection possibilities of external firing rate input

NOTICE

If 0 ... 10 V input is used for the presetting of the firing rate the sensor must be able to load the input of the LCM100 with 100 µA to 0.
This is valid up to SN 16170050 only.

7.1.13 DIP Switch

You can configure settings of LCM100 by DIP switches.

	DIP-Switch	
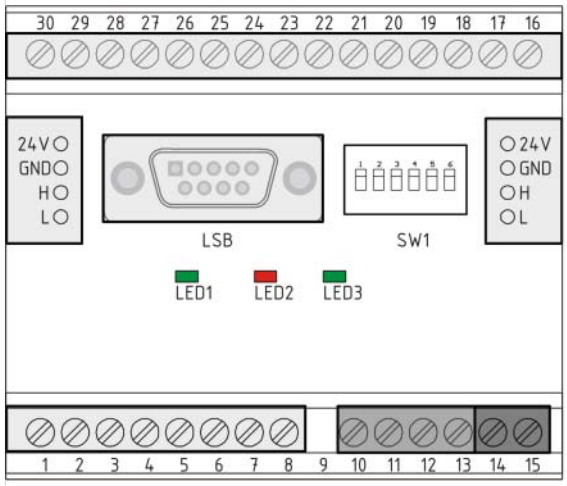	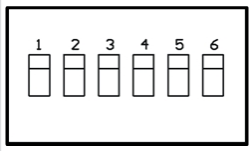	1 0

Functions of DIP switches

You can activate or deactivate CAN terminating resistor by DIP switch 1.

DIP switch 1	
0	CAN terminal resistance inactive
1	CAN terminal resistance active

You can set LSB Family by DIP switches 2 - 3.

DIP switch 2	DIP switch 3	LSB Family
0	0	1
0	1	2
1	0	3
1	1	4

You can set sensor inputs by DIP switches 4 - 6.

DIP switch 4	DIP switch 5	DIP switch 6	Input
0	–	–	PT100 Boiler temperature sensor
1	–	–	PT1000 Boiler temperature sensor
–	0	–	PT100 Ambient temperature sensor
–	1	–	PT1000 Ambient temperature sensor
–	–	0	PT100 Flue gas temperature sensor
–	–	1	PT1000 Flue gas temperature sensor

7.1.14 LEDs

The LCM100 has 3 LEDs which should be connected as mentioned below:

LED	Colour	Relevance
ERR (LED 1)	red	During normal operation this LED is switched off. It will light up under following conditions: - Initialisation not yet accomplished or aborted (e.g. HW could not be initialised) - Cannot receive any messages for at least 3 seconds
CAN (LED 2)	green	**OFF:** CAN Controller in Bus OFF. No communication possible. **Blinking:** CAN Controller discovered a temporary fault. After fixing the problem, LED would still blink for some time. **ON:** CAN is ready to operate.
PWR (LED 3)	green	**ON:** Module is working normally = fully initialised and without any fault.

7.1.15 Electrical Connection

Connect power control unit LCM100 to BT300 via plug X31 and LCM terminals 10 - 13.

NOTICE

As soon as an LCM100 is connected to BT300, the inputs Last- and Last+ will no longer be supported by the plug X09. It is very important to connect these signals as potential-free contacts to the LCM100 (see chapter *7.1.15.2 Terminal Assignment*).

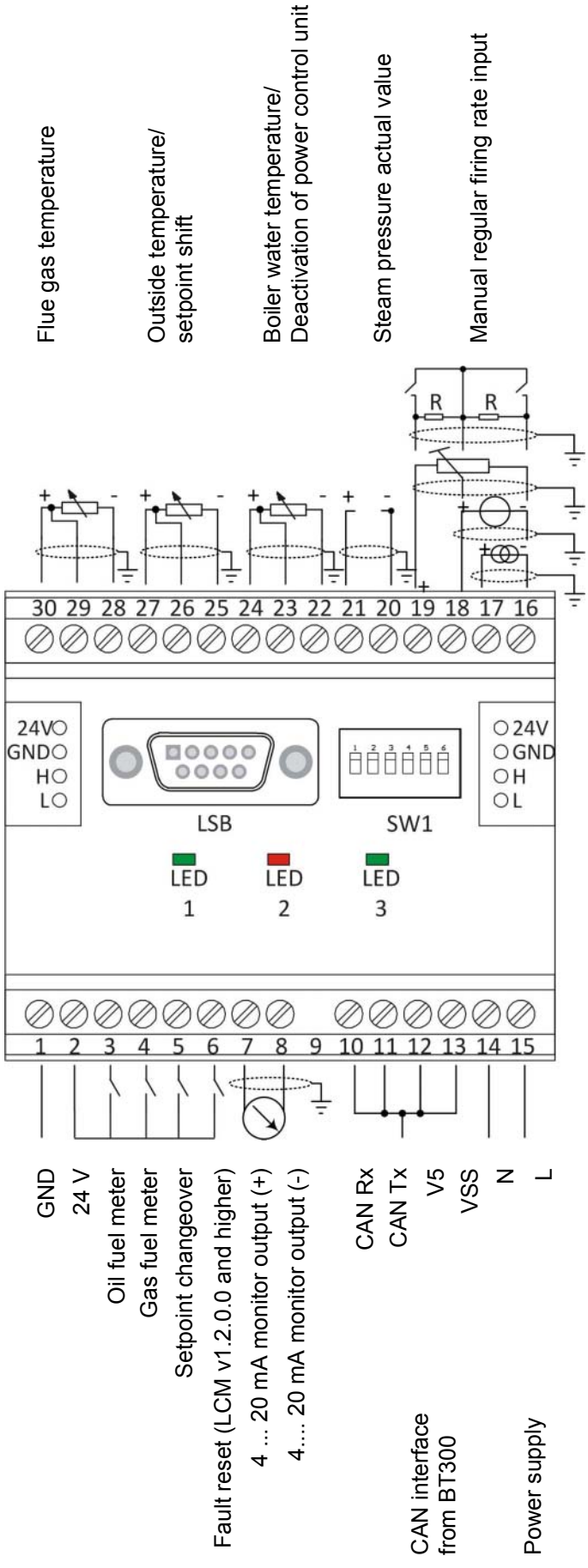

TPS (Three-Point-Step)

Potentiometer

0 ... 10 V
4 ... 20 mA

R = 2.2 kΩ - 22 kΩ
LED1 = Error
LED2 = CAN data traffic
LED3 = Power ON

Cable assembly	Type	Shield	Cable length max [m]
Mains	AC in	-	100
24 V external	DC out	-	100
BT-CAN	IO	-	1
CAN	IO	X	100
Fuel measurement oil	I	-	10
Fuel measurement gas	I	-	10
Setpoint changeover	I	-	10
Fault reset	I	-	10
Flue gas temperature	I	X	100
Ambient temperature	I	X	100
Boiler water temperature	I	X	10
Steam pressure	I	X	10
Combination input 20 mA	I	X	100
Combination input term. 18	I	X	100
Monitor output	O	X	100

I = Input
O = Output
AC = Alternating current input; 90 - 250 V AC 47 - 63 Hz
DC = Direct current supply

NOTICE

As soon as duct shielding is provided this must be laid to a separate terminal on PE.

7.1.15.1 Galvanic Isolation

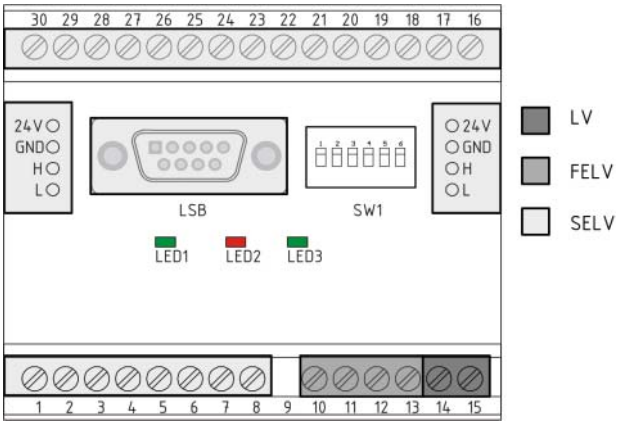

Fig. 7-10 Electrical isolation LCM100

LV = **L**ine **V**oltage

FELV = **F**unctional **E**xtra **L**ow **V**oltage
Cannot be used as safety measure against electrical shock.

SELV = **S**afety **E**xtra **L**ow **V**oltage offers protection against electrical shock.

DANGER!

Attention! Short-circuit danger and electrical shock!

An improper wiring connection could lead to a short-circuit, which may cause damages to the connected devices or to an electrical shock.

▶ Please ensure all connections on SELV have a **safe separation** from main voltage in wiring and with connected devices!

7.1.15.2 Terminal Assignment

LCM100 has a 24 V power supply for pressure transmitter and for power supplies of other LSB modules.

The maximum current is 400 mA for all power supplies.

This power supply is parallel to 24 V power supply of LSB.

CAUTION!

You are not allowed to supply LCM100 through LSB terminals from external.

Fuel Meter

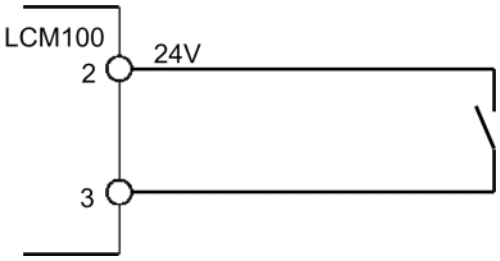

Fig. 7-11 Connection fuel meter for oil with reed contact output

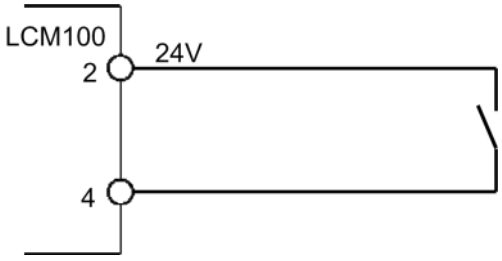

Fig. 7-12 Connection fuel meter for gas with reed contact output

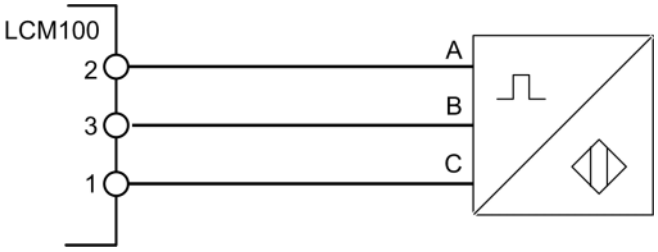

Fig. 7-13 Connection fuel meter for oil with pulse output

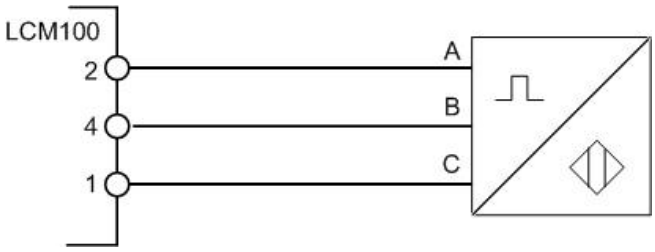

Fig. 7-14 Connection fuel meter for gas with pulse output

A = Power + **B** = Signal + **C** = GND

Fuel meters with pulse outputs can be connected to terminals 3 and 4. Switch contacts as well as voltage pulses up to 300 kHz can be processed.
When processing voltage pulses voltage < 8 V is processed as OFF and voltage >16 V is processed as ON.
The cumulative fuel consumption can be readout and reset with the LSB Remote Software.
Parameters 70 to 82 contain the settings for fuel meters.

Setpoint changeover

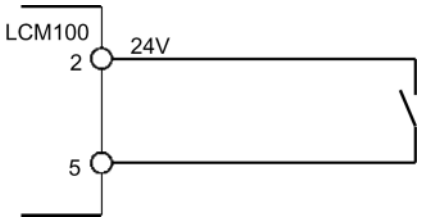

Fig. 7-15 Setpoint changeover connection

Fault Reset

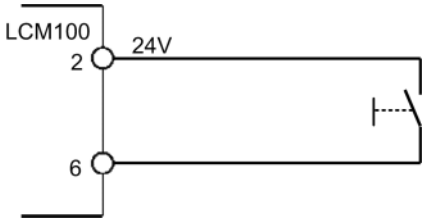

LCM100 software version 1.2.0.0 and higher and BT300 software version 3.2.0.0 and higher enable the digital output at terminal 6 of the LCM100 to be used as a fault reset input.
Only 4 fault resets every 15 minutes are allowed because this fault reset is transferred by LSB.
More than 4 fault resets every 15 minutes cause fault H889.

CAN Interface (Terminal 10 - 13)

Recommendation: Connect BT300 plug X31 to LCM100 by a prefabricated cable with LAMTEC Order No. 667P0515. The plug X31 is already installed on this cable and terminal numbers for LCM100 are marked on the wires.

Power input L; N (Terminal 14; 15)

Connect power input (90 - 250 V 47 - 63 Hz) to these terminals, so that LCM100 can supply voltage to LSB (max 400 mA).

Terminal connections 20 - 30

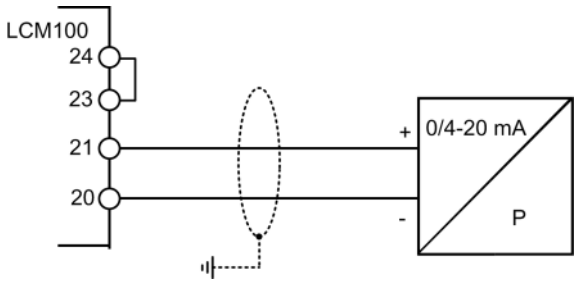

*Fig. 7-16 Actual value of steam pressure connection **

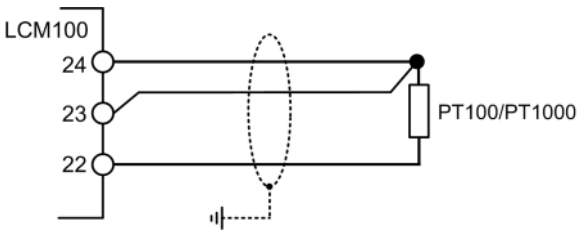

Fig. 7-17 Actual value of boiler temperature connection

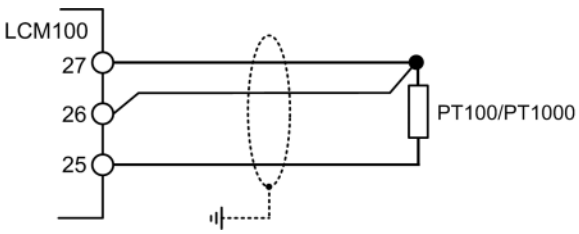

Fig. 7-18 Ambient temperature connection/setpoint shift

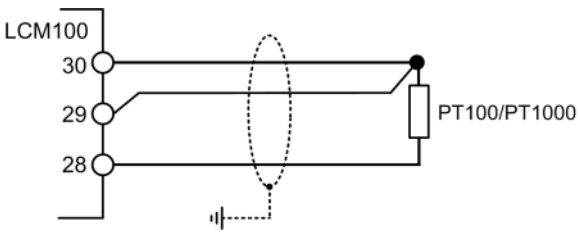

Fig. 7-19 Flue gas temperature connection

* Bridge terminal 23 with terminal 24

⚠ CAUTION!

Short circuit and electric shock!

If the analogue standard signals are not separated from the mains, a buffer amplifier must be used for galvanic separation.

Pressure sensor connections

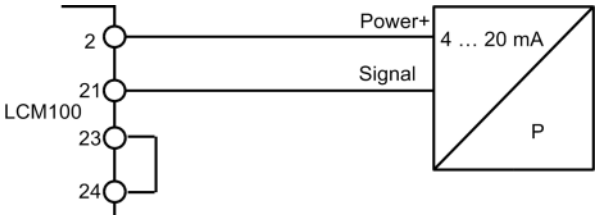

*Fig. 7-20 Connection pressure sensor 2-wire-system **

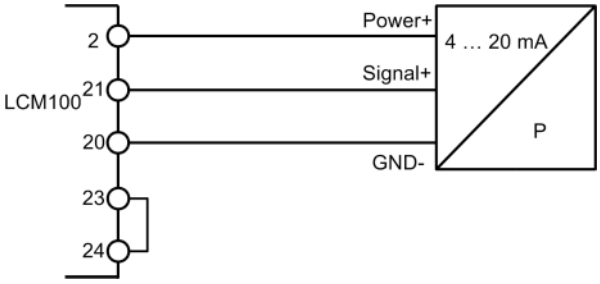

*Fig. 7-21 Connection pressure sensor 3-wire-system **

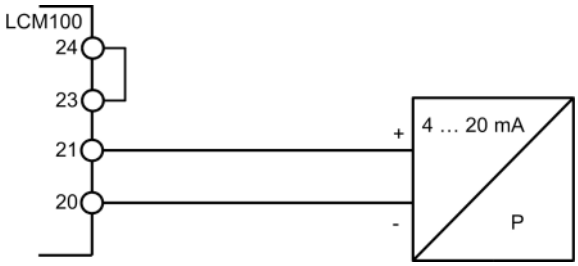

*Fig. 7-22 Connection pressure with active current output **

* bridge terminal 23 with terminal 24

⚠ CAUTION!

Short circuit and electric shock!

If the analogue standard signals are not separated from the mains, a buffer amplifier must be used for galvanic separation.

Analogue Output (Terminal 7; 8)

Define the internal firing rate of the BT300 with this output.

⚠ CAUTION!

The cables must be shielded!

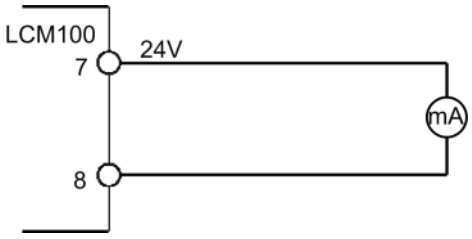

4 ... 20 mA

Fig. 7-23 Connection monitor output

The monitor output displays the internal firing rate.

0	Digit internal firing rate	=	4 mA
999	Digit internal firing rate	=	20 mA

7.1.16 Technical data LCM100

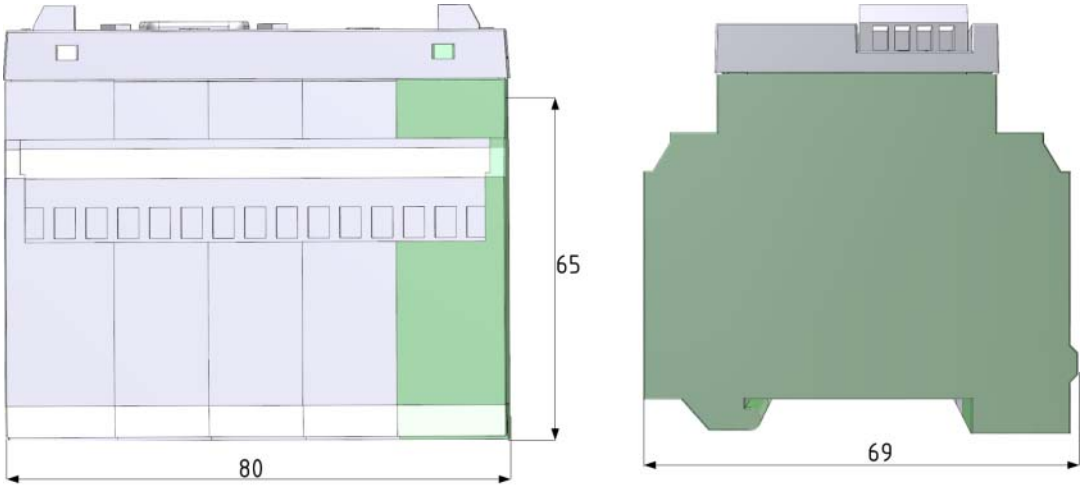

Fig. 7-24 Dimensions LCM100

General data	
Power supply:	90 - 250 V 47 - 63 Hz
Power consumption:	18,2 VA
Housing:	Polyamide 6.6 (panel: polycarbonate)
Dimensions:	65x70x80 mm
Weight:	270 g
Flammability:	UL-94 V0 (panel: UL-94 V2)
Mounting position:	as desired
Installation:	TS35 mounting rail as per EN 50022
Connection cross section:	2.5 mm^2 (plugged LSB terminals: 1.5mm²)
24VDC Output	
Rated voltage:	24 VDC +/-2 % (SELV)
Output current:	max. 400 mA
Short-circuit resistant:	yes, unlimited
Resolution:	12 bit
Accuracy:	0,02 mA
Refresh interval:	>>32 Hz
Input outside temperature	
Valid sensors:	Pt100 or Pt1000 (switchable)
Range of measuring:	Outside temperature: -50 … +150 °C Boiler temperature: 0 ... 400 °C Flue gas: 0 ... 400 °C
Resolution:	0,1 °C
Accuracy of measurement:	Range -5 ... +150 °C = ±1 °C Range +150 ...+400 °C = ±2 °C

Input outside temperature	
Constant data of low-pass filter of first order:	2 s
Sampling rate:	32 Hz

External firing rate input 0/4 ... 20 mA	
Measured value:	bar or digit
Resolution:	12 bit
Load:	150 Ω
Sampling rate:	>>32 Hz

External firing rate input 0 ... 10 V	
Resolution:	12 bit
Load:	100 kΩ
Sampling rate:	>>32 Hz

External firing rate input - potentiometer input	
Resolution:	12 bit
Load:	5 kΩ
Sampling rate:	>>32 Hz

External firing rate DPS Input	
Sampling rate:	>>32 Hz

Analogue output 4 ... 20 mA	
Resolution:	12 bit
Accuracy:	0,02 mA
Load:	500 kΩ
Sampling rate:	>>32 Hz

Fuel meter input (digital input)	
Input frequency max.:	300 Hz
Cable length max.:	10m

Digital inputs (setpoint switching and reserve input)	
Input frequency max.:	300 Hz
Cable length max.:	10 m

LAMTEC SYSTEM BUS	
Bit rate:	125 kbit/s
Address:	static LSB address, device family 1-4, selection with dip-switch
Termination:	integrated, activation with dip-switch

Environmental Conditions

Operation:	Climatic conditions	Class 3K5 according to DIN EN 60721-3
	Mechanic conditions	Class 3M5 according to DIN EN 60721-3
	Temperature range	-20 ... +60 °C (condensation is prohibited)

7 Options

Environmental Conditions		
Transport:	Climatic conditions	Class 2K3 according to DIN EN 60721-3
	Mechanic conditions	Class 2M2 according to DIN EN 60721-3
	Temperature range	-20 ... +70 °C (condensation is prohibited)
Storage:	Climatic conditions	Class 1K3 according to DIN EN 60721-3
	Mechanic conditions	Class 1M2 according to DIN EN 60721-3
	Temperature range	-20 ... +70 °C (condensation is prohibited)
Electronic safety:	Degree of protection (DIN EN 60529)	IP40 housing IP20 terminals
	Protection class (DIN EN 60730)	II

7.2 Dual Fuel Module DFM300

NOTICE

Use DFM300 only in combination with BT340.

The DFM300 is an expansion module that enables operation of dual-fuel burners in combination with BurnerTronic BT340.

Depending on selected fuel, the module switches valve outputs and ignition transformer output of BT300 to valves and ignition transformer for selected fuel.

In addition, DFM300 can switch over to 'burner safety interlock chain' input of BT300. This allows safety chain devices of currently inactive fuel (e.g. oil pressure monitor during gas operation) to be open.

The DFM300 is connected to BT300 via LSB (LAMTEC SYSTEM BUS). DFM300 is providing a 230 VAC input for selection of current fuel.

NOTICE

Use VSM and DFM only with BT300 software version 3.0.0.0 or higher. Software versions before 3.0.0.0 do not support all necessary safety functions.

Connect dual-fuel module DFM300 via (LSB) LAMTEC SYSTEM BUS to the BT34x.

To insulate LSB from potential power supply voltage of BT34x, a LCM100 or a LEM100 with external power supply 24 VDC SELV will be needed. This is provided by DFM with 24 VDC via LSB.

Configure DFM300 by DIP switch.

NOTICE

The oil pressure monitor must be integrated into the safety interlock chain oil. For the purposes of leakage test the gas pressure monitor must be integrated in the pressure monitor input of BT300.

NOTICE

Before you are can use the device you must set parameters P0525, P0801 and P0812 of BT300.

No.	Device	Description	Attributes
0525	BT300	Setting of number of stages for staged operation in oil mode (0 = modulated operation/ 1 = 2 stages/2 = 3 stages)	
		0 = 1 stage = modulated operation 1 = 2 stages 2 = 3 stages	Group: 60 Min.: 0 Max.: 2 Default: 0 Write: 2 Version: 1.0.0.0
0801	BT300	Definition of terminal assignment (0: oil operation - two-stage or modulating/1: oil operation - three-stage/2: gas operation - modulating/3: dual fuel - oil and gas operation - modulating/4: dual fuel - oil operation two or three-stage and gas operation)	
		Definition of terminal assignment 0: oil operation - two-stage or modulating 1: oil operation - three-stage (pilot burner not available) 2: gas operation - modulating (BT340 only) 3: dual fuel - oil operation - modulating or two-stage or gas operation - modulating pilot burner permitted (BT340 only) 4: dual fuel - oil operation up to three stages (without pilot burner) and modulating gas operation (BT340 only)	Group: 85 Min.: 0 Max.: 65535 Default: 2 Write: 2 Version: 1.0.0.0
0812	BT300	Definition of source for fuel selection (0: fuel selection with P 808/1: fuel selection via terminal at Dual Fuel Module)	
		Definition of source for fuel selection 0 = fuel selection with P 808 1 = fuel selection via terminal at Dual Fuel Module (DFM) 2 = fuel selection via LSB (p.ex. PBM)	Group: 85 Min.: 0 Max.: 2 Default: 0 Write: 2 Version: 1.0.0.0

7.2.1 DIP Switch

You can configure settings of DFM300 using DIP switches.

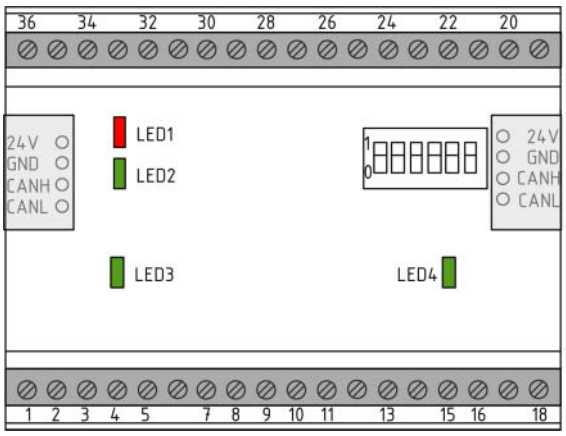

Fig. 7-25 DFM300

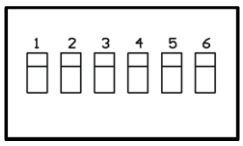

Position 1

Position 0

Fig. 7-26 DIP switch

Functions of DIP switches

You can activate or deactivate the LSB terminating resistor by DIP switch 1.

DIP switch 1	
0	LSB terminating resistor deactivated
1	LSB terminating resistor activated

You can set LSB family by DIP switch 2-3.

DIP switch 2	DIP switch 3	LSB Family
0	0	1
0	1	2
1	0	3
1	1	4

DIP switches 4 - 6 are not assigned.

7.2.2 LEDs

The DFM300 has 4 LEDs connected as mentioned below:

LED	Colour	Description
Fault (LED1)	red	During normal operation LED is switched off. It will light up subject to following conditions: - Initialisation incomplete or not yet successfully completed (e.g. HW could not be initialised) - No messages received for at least 3 s.
LSB active (LED2)	green	**OFF:** CAN Controller in Bus OFF. No communication possible. **Blinking:** CAN Controller discovered temporary fault. After fixing the problem LED will still blink for some time. **ON:** CAN is ready to operate.
Oil active (LED3)	green	**ON:** Oil operation
Gas active (LED4)	green	**ON:** Gas operation

7.2.3 Electrical Connection

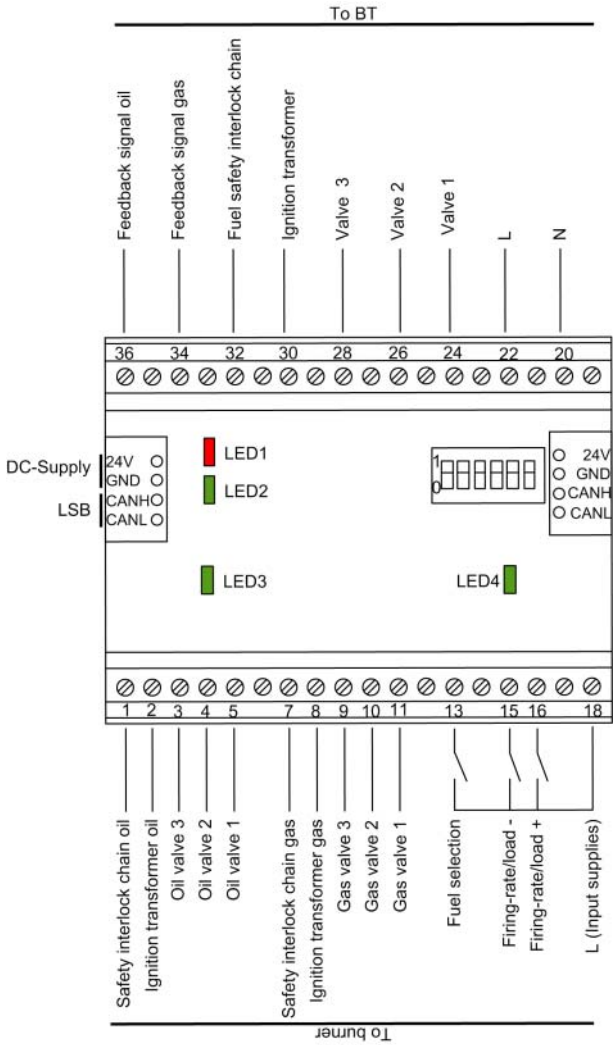

LED1 = Error

LED2 = CAN

LED3 = Oil active

LED4 = Gas active

Signal Line	Type	Shield	Cable length max. [m]
Fuel valve 1	I		10 m - Gas valve 1/oil valve 1
Fuel valve 2	I		10 m - Gas valve 2/oil valve 2
Fuel valve 3	I		10 m - Gas valve 2/oil valve 2/ignition valve
SIC fuel	I		10 m - SIC gas/SIC oil
Ignition transformer	I		10 m - Ignition transformer gas /oil
Firing rate+	I		20 m
Firing rate-	I		20 m
Fuel selection	I		20 m
Feedback oil	O		10 m
Feedback gas	O		10 m
Gas valve 1	O		10 m - input fuel valve 1
Gas valve 2	O		10 m - input fuel valve 2
Gas valve 3/ignition valve	O		10 m - input fuel valve 3

Signal Line	Type	Shield	Cable length max. [m]
SIC gas	O		10 m - input SIC fuel
Ignition transformer gas	O		10 m - input ignition transformer
Oil valve 1	O		10 m - input fuel valve 1
Oil valve 2	O		10 m - input fuel valve 2
Oil valve 3/ignition valve	O		10 m - input fuel valve 3
SIC oil	O		10 m - input SIC fuel
Ignition transformer oil	O		10 m - input ignition transformer
LSB	I/O	X	100 m

I = Input
O = Output
AC = Power supply input; 230/115 V 47 ... 63 Hz
DC = Direct voltage supply
SIC = Safety interlock chain

NOTICE

If cable shielding is provided, it must be connected to an extra protected earth terminal.

⚠ WARNING!

In circuits with max. 20 m cable length, only 3 signals are allowed to be transmitted in one cable, otherwise this can lead to a dangerous malfunction.

▶ Safety interlock chain is open but recognised as closed.

7.2.3.1 Galvanic Isolation

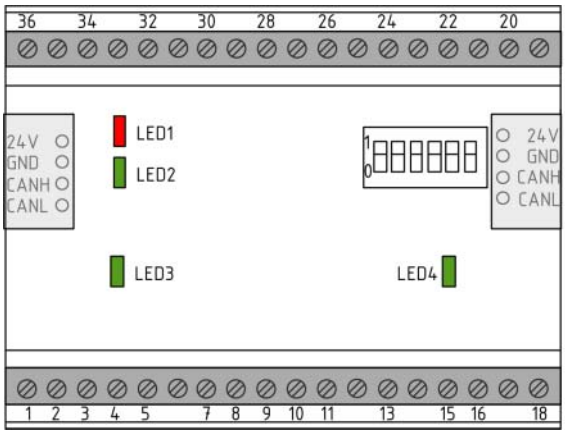

Fig. 7-27 Galvanic isolation DFM300

LV = **L**ine **V**oltage
SELV = **S**afety **E**xtra **L**ow **V**oltage provides protection against electrical shock.

DANGER!

Attention! Short-circuit danger and electrical shock!

An improper wiring could lead to a short-circuit which may cause damages to connected devices or an electrical shock.

▶ Please ensure all connections on SELV have a **safe separation** from main voltage in wiring and with connected devices!

7.2.3.2 Terminal Assignment

Oil acknowledgement/Gas acknowledgement (Terminals 36; 34)

To provide that signal 'fuel selection' is clearly identified by BT340/341, you must connect terminals as described below:

From terminal DFM300	to the plug X09 BT300	Signal
34	Pin 1 (Load-)	Gas operation
36	Pin 2 (Load+)	Oil operation

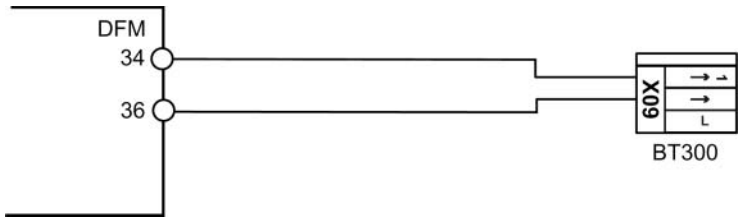

Fig. 7-28 Feedback connection oil/gas

The inputs load+ and load- are reserved on BT300 by fuel selection. The signals load+ and load- will be taken over by DFM300 and transmitted to BT300 by LSB.

Fuel selection

For fuel selection via input of terminal 13 of the DFM following requirements must be fulfilled:

– P 0812 = 1
– P 0801 = 3 or 4 (dual fuel applications)
– all parameters and curve for oil and gas must be set.

Terminal 13 circuit:

Voltage	Curve set
0 V	Curve set 1 (Oil operation)
230 V	Curve set 2 (Gas operation)

Circuit diagram for modulating 2/3 stage oil and gas

NOTICE

The gas ignition valve is optional. You can replace oil ignition valve for 3rd stage from two-stage oil operation with an optional ignition valve.

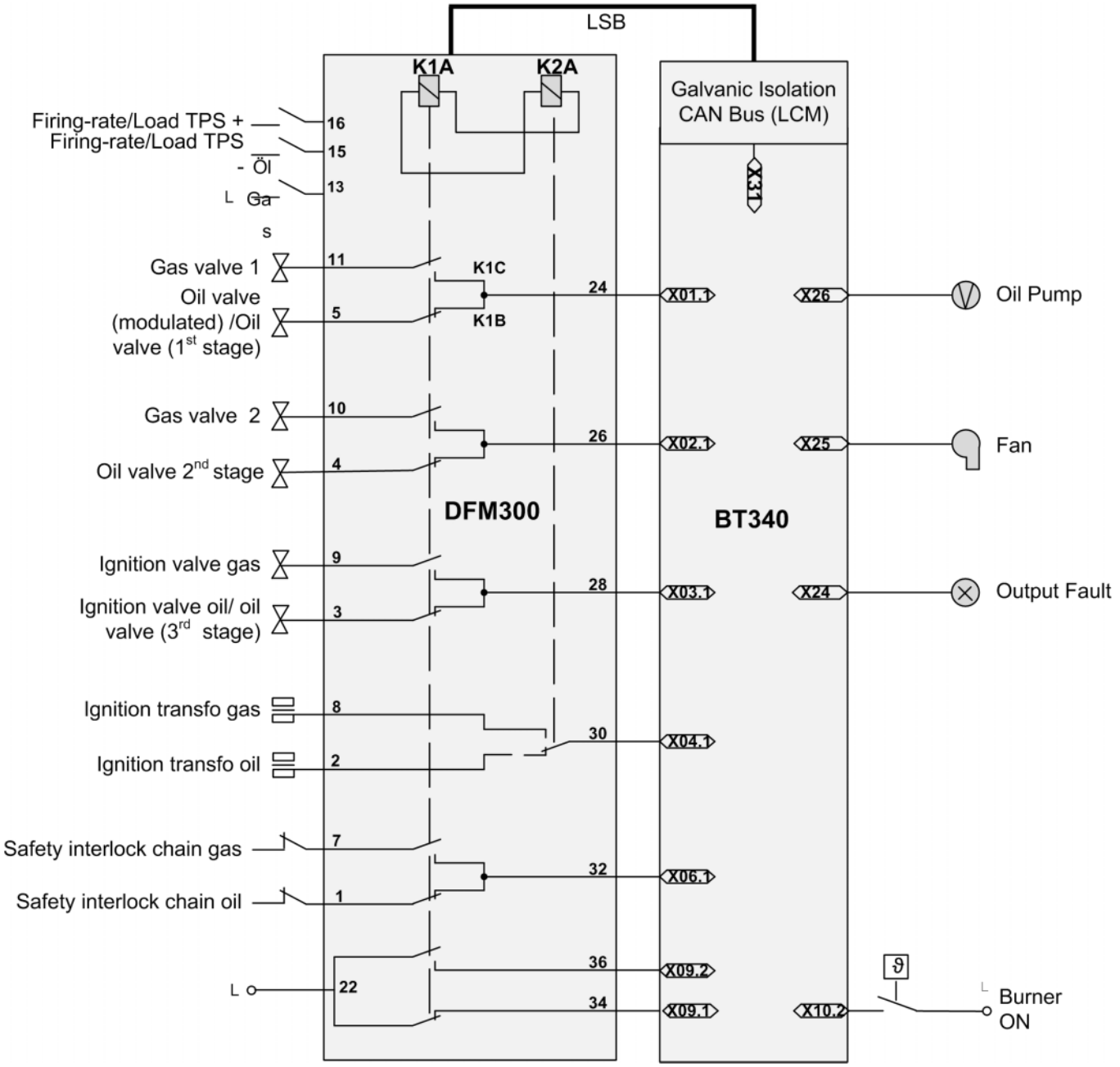

Fig. 7-29 Circuit diagram for modulating 2/3 stage oil and gas

NOTICE

You must integrate the oil pressure monitor into safety interlock chain oil. For the purposes of leakage test you must connect the gas pressure monitor to pressure monitor input of BT300.

7.2.4 Technical Data DFM300

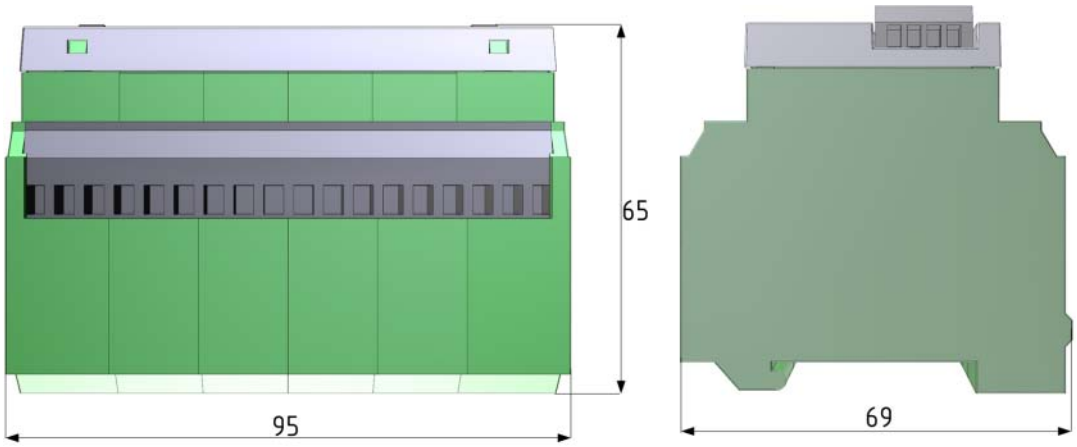

Fig. 7-30 Dimensions DFM300

General data	
Power supply:	24 VDC
Power supply for 230/115 V in/outputs	230 V +10/-15 V, 47 ... 63 Hz 115 V +10/-15 V, 47 ... 63 Hz
Current consumption:	140 mA
Housing:	PVC or Polyamide 6.6 (panel: polycarbonate)
Dimensions:	max. 65x70x95 mm
Weight:	79 g
Flammability:	UL-94 V0 (panel: UL-94 V2)
Mounting position:	as desired
Installation:	TS35 mounting rail as per EN 50022 or TS32 as per EN 50035
Connection cross section:	2.5 mm^2

LAMTEC SYSTEM BUS	
Bit rate:	125 kbit/s
Addressing:	fixed LSB address, device family 1-4 selected by DIP switch
Termination:	integrated, switched by DIP switch

Environmental Conditions		
Operation:	Climatic conditions	Class 3K5 according to DIN EN 60721-3
	Mechanic conditions	Class 3M5 according to DIN EN 60721-3
	Temperature range	-20 ... +60 °C (condensation is prohibited)
Transport:	Climatic conditions	Class 2K3 according to DIN EN 60721-3
	Mechanic conditions	Class 2M2 according to DIN EN 60721-3
	Temperature range	-20 ... +70 °C (condensation is prohibited)
Storage:	Climatic conditions	Class 1K3 according to DIN EN 60721-3
	Mechanic conditions	Class 1M2 according to DIN EN 60721-3
	Temperature range	-20 ... +70 °C (condensation is prohibited)

Environmental Conditions		
Electronic safety:	Degree of protection (DIN EN 60529)	IP40 housing IP20 terminals

7.2.5 Adapter System Rast5

The burner is connected to DFM in general via BTR/Riaconn-screw terminal block.

In order to connect DFM exactly the same way as BT300 which means directly at a mono-fuel burner the Rast5 module is transposing connectors provided by DFM.

Furthermore Rast5 module is providing L, N and PE connectors.

7.2.5.1 Electrical Connection

Connecting Rast5 module

1. Connect DFM to BT300 in the usual way.
2. Lead connectors of DFM for burner, fuel selection and firing rate specification and also PE, N and L connectors from BT to adapter.

The adapter transposes connectors of Rast5 terminals.

The adapter is coding Rast5 terminals for both fuels, if possible analogue to connectors of BT300.

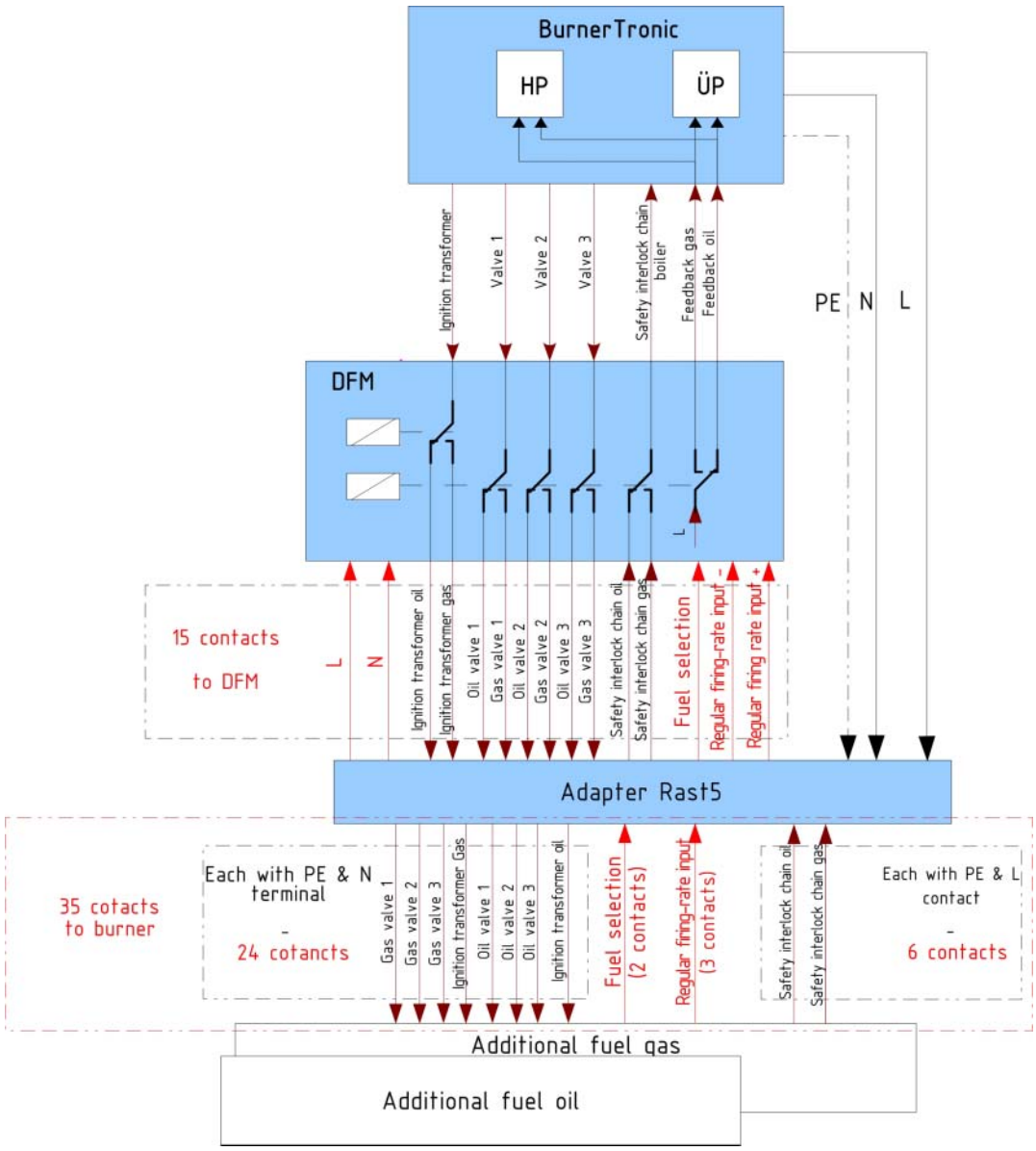

Fig. 7-31 Connection Rast5 module

Connection to burner

Rast5 adapter offers following options to connect the burner:

Connection assignment	Terminal type		Plug	Terminal	Terminal block
Valve gas 1	1	GV1→	X01	X01-Gas	X700
	2	PE			
	3	N			
Valve gas 2	1	GV2→	X02	X02-Gas	
	2	PE			
	3	N			
Valve gas 3	1	GV3→	X03	X03-Gas	
	2	PE			
	3	N			
Ignition transformer gas	1	ZT Gas→	X04	X04-Gas	
	2	PE			
	3	N			
Valve oil 1	1	ÖV1→	X01	X01-Oil	X701
	2	PE			
	3	N			
Valve oil 2	1	ÖV2→	X02	X02-Oil	
	2	PE			
	3	N			
Valve oil 3	1	ÖV2→	X03	X03-Oil	
	2	PE			
	3	N			
Ignition transformer oil	1	ZTÖl→	X04	X04-Oil	
	2	PE			
	3	N			
Security chain oil	1	GSK→	X06	X06-Oil	X702
	2	PE			
	3	L			
Security chain gas	1	GSK→	X06	X06-Gas	X702
	2	PE			
	3	L			
Firing rate	1	Firing rate -	X09	X09-DFM	X704
	2	Firing rate +			
	3	L			
Fuel change	1	L	X40	X40-DFM	X705
	2	GSK→			

Connection to DFM and BT300

Rast5 adapter offers following options to connect DFM and BT300:

Connection assignment	Terminal type		Plug	Terminal	Terminal block
to BT300	1	L	X028	X28-BT	X706
	2	PE			
	3	N			
to DFM	1	Fuel selection	X41	X41-DFM	
	2	L			
	3	N			
to DFM	1	Security chain gas	X42	X42-DFM	X707
	2	Ignition transformer gas			
	3	Security chain oil			
	4	Ignition transformer oil			
	1	firing rate input -	X43	X43-DFM	
	2	firing rate input +			
	1	Valve gas 1	X44	X44-DFM	
	2	Valve gas 2			
	3	Valve gas 3			
	1	Valve oil 1	X45	X45-DFM	
	2	Valve oil 2			
	3	Valve oil 3			

7.2.5.2 Technical Data Rast5-Module

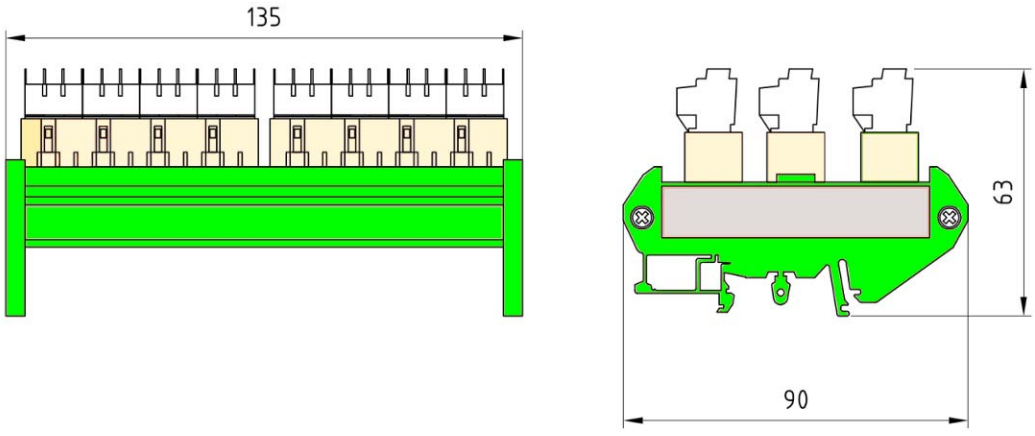

Fig. 7-32 Dimensions Rast5 module

Rast5-Module	
Housing:	PVC green
Mounting:	Mounting rail TH35 according to EN 60715

7 Options

Rast5-Module	
Dimensions:	80x70x65 mm
Weight:	265 g
Flammability:	UL-94 V0 (Panel: UL-94 V2)
Cable length:	refer to inputs/outputs of DFM300
Connection cross section:	2,5 mm^2

Environmental conditions		
Operation:	Climatic conditions	Class 3K5 according to DIN EN 60721-3
	Mechanic conditions	Class 3M5 according to DIN EN 60721-3
	Temperature range	-15 ... +50 °C (condensation is prohibited)
Transport:	Climatic conditions	Class 2K3 according to DIN EN 60721-3
	Mechanic conditions	Class 2M2 according to DIN EN 60721-3
	Temperature range	-15 ... +50 °C (condensation is prohibited)
Storage:	Climatic conditions	Class 1K3 according to DIN EN 60721-3
	Mechanic conditions	Class 1M2 according to DIN EN 60721-3
	Temperature range	-15 ... +50 °C (condensation is prohibited)
Electronic safety:	Protection class (DIN EN 60529)	IP20

7.3 Variable Speed Drive Module VSM100

The VSM100 is enhancing BT300 with an analogue output for a speed-controlled compressor including its speed measurement.

NOTICE

Use VSM and DFM only with BT300 software version 3.0.0.0 or higher. Software versionens before 3.0.0.0 do not support all necessary safety functions.

Connect the RPM module VSM100 via LSB (LAMTEC SYSTEM BUS) to BT300.

To insulate LSB from potential power supply voltage of BT300 a LCM100 or a LEM with power supply 24 VDC SELV is needed. This is provided by DFM with 24 VDC via LSB.

Configure VSM100 by DIP switch.

NOTICE

Before attaching VSM100 a valid curve including activated VSM mus be programmed.

NOTICE

Before you can use the device you must set the parameters P0403 ... P0406 in the BT300.

<table>
<tr><th>No.</th><th>Device</th><th>Description</th><th>Attributes</th></tr>
<tr><td>0403</td><td>BT300</td><td>Specification of channel 4 functions</td><td></td></tr>
<tr><td></td><td></td><td>see P 400</td><td>Group: 50
Min.: 0
Max.: 6
Default: 0
Write: 2
Version: 1.0.0.0</td></tr>
<tr><td>0405</td><td>BT300</td><td>Channel release for curve set 1</td><td></td></tr>
<tr><td></td><td></td><td>Switch-off bit for each curve set. If bit ’x’ is set, channel in curve set ’x’ is in use.
Define with this parameter active channel in a curve set. All channels are activated by default. With this function you can change e.g. channel activities at oil/gas operation (BT34x).
Selection via bit pattern.
<table><tr><th>Channel 1</th><th>Channel 2</th><th>Channel 3</th><th>Channel 4</th><th>Value</th></tr><tr><td>1</td><td>0</td><td>0</td><td>0</td><td>1</td></tr><tr><td>0</td><td>1</td><td>0</td><td>0</td><td>2</td></tr><tr><td>1</td><td>1</td><td>0</td><td>0</td><td>3</td></tr><tr><td>0</td><td>0</td><td>1</td><td>0</td><td>4</td></tr><tr><td>1</td><td>0</td><td>1</td><td>0</td><td>5</td></tr><tr><td>0</td><td>1</td><td>1</td><td>0</td><td>6</td></tr><tr><td>1</td><td>1</td><td>1</td><td>0</td><td>7</td></tr><tr><td>0</td><td>0</td><td>0</td><td>1</td><td>8</td></tr><tr><td>1</td><td>0</td><td>0</td><td>1</td><td>9</td></tr><tr><td>0</td><td>1</td><td>0</td><td>1</td><td>10</td></tr><tr><td>1</td><td>1</td><td>0</td><td>1</td><td>11</td></tr><tr><td>0</td><td>0</td><td>1</td><td>1</td><td>12</td></tr><tr><td>1</td><td>0</td><td>1</td><td>1</td><td>13</td></tr><tr><td>0</td><td>1</td><td>1</td><td>1</td><td>14</td></tr><tr><td>1</td><td>1</td><td>1</td><td>1</td><td>15</td></tr></table>1 = active
0 = inactive</td><td>Group: 50
Min.: 0
Max.: 15
Default: 15
Write: 2
Version: 1.0.0.0</td></tr>
<tr><td>0406</td><td>BT300</td><td>Channel release for curve set 2</td><td></td></tr>
<tr><td></td><td></td><td>with bit pattern see P 405</td><td>Group: 50
Min.: 0
Max.: 15
Default: 15
Write: 2
Version: 1.0.0.0</td></tr>
</table>

7.3.1 DIP Switch

You can configure settings of VSM300 using DIP switches.

Functions of DIP switches

You can activate or deactivate the LSB terminating resistor by DIP switch 1.

7 Options

DIP-Switch 1		
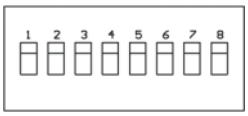	1	LSB terminating resistor deactivated
	0	LSB terminating resistor activated

You can set LSB family by DIP switch 2-3.

DIP switch 2	DIP switch 3	LSB family
0	0	1
0	1	2
1	0	3
1	1	4

Select sensor input with DIP switch 4 - 7 for acknowledgement and range of values settings.

DIP switch 4	DIP switch 5	DIP switch 6	DIP switch 7	Input/Value range
0	0	0	1	Namur sensor 600 - 7200 Imp/Min
0	0	1	0	Namur sensor 300 - 3600 Imp/Min
0	1	0	0	3-wire sensor 30 - 300 Imp/Min
0	1	0	1	3-wire sensor 600 - 7200 Imp/Min
0	1	1	0	3-wire sensor 300 - 3600 Imp/Min
1	0	0	0	current input 0 - 20mA
1	0	0	1	current input 4 - 20mA

DIP switch 8	
0	0 - 20 mA setpoint output for frequency converter
1	4 - 20 mA setpoint output for frequency converter

7.3.2 LEDs

The VSM100 has 5 LEDs which should be connected as described below:

LED	Colour	Relevance
ERR (LED1)	red	During normal operation LED is switched off. It will light up subject to following conditions: - Initialisation incomplete or not yet successfully completed (e.g. HW could not be initialised) - No messages received for at least 3 s.
PWR (LED2)	green	**ON:** Module working in normal mode = fully initialised and without any fault.
CAN (LED3)	green	**OFF:** CAN Controller in Bus OFF. No communication possible. **Blinking:** CAN Controller discovered temporary fault. After fixing the problem LED will still blink for some time. **ON:** CAN is ready to operate.
Namur (LED4)	yellow	**Blinking:** LED will always be toggled soon as an impulse reaches Namur input. LED will blink with half the impulse frequency.
3-wires (LED5)	yellow	**Blinking:** LED will always be toggled as soon as an impulse reaches 3-wire input. LED will blink with half the impulse frequency.

NOTICE

If a functional error occurs at VSM, the ERR (LED 1) red is ON, PWR (LED 2) green and CAN (LED 3) are OFF.
Incorrect adjusted dip-switches 4 to 7 may cause this fault.
BT300 generates fault 807.

7.3.3 Electrical Connection

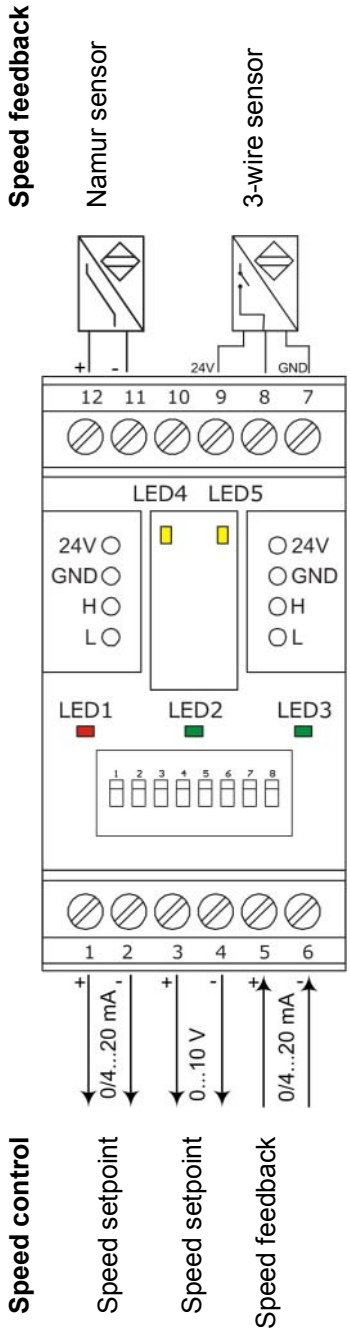

LED1 = Error
LED2 = ON
LED3 = CAN data traffic
LED4 = Namur
LED5 = 3-wire

CAUTION!

Short circuit and electric shock!

If the analogue standard signals are not separated from the mains, a buffer amplifier must be used for galvanic separation.

Circuit	Type	Shielding	Cable length max. [m]
Speed feedback Namur sensor	I	-	10
Speed feedback 3-wire sensor	I	-	10

Circuit	Type	Shielding	Cable length max. [m]
Speed feedback 0/4 ... 20 mA	I	-	10
Speed setpoint 0/4 ... 20 mA	O	-	10
Speed setpoint 0 ... 10 V	O	-	10
LSB	I/O	X	100

I = Input

O = Output

NOTICE

If cable shielding is provided you must connect this shielding to an extra protected earth terminal.

7.3.3.1 Galvanic Isolation

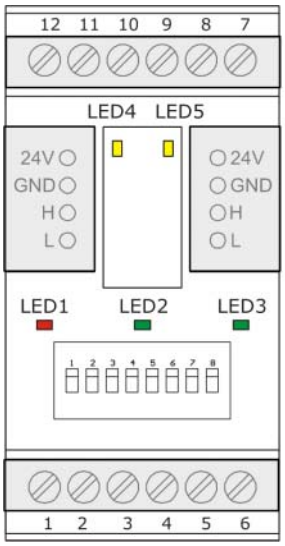

SELV = **S**afety **E**xtra **L**ow **V**oltage provides protection against electrical shock.

Fig. 7-33 Galvanic isolation VSM100

DANGER!

Attention! Short-circuit danger!

An improper wiring could lead to a short-circuit which may cause damages to connected devices or an electrical shock.

▶ Please ensure all connections on SELV have a **safe separation** from main voltage in wiring and with connected devices!

7.3.3.2 Terminal Assignment

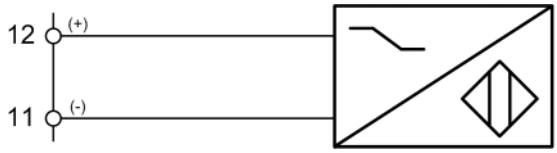

Fig. 7-34 Namur Sensor, 2-wire system

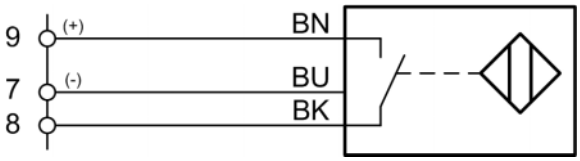

BN = brown
BU = blue
BK = black

Fig. 7-35 Inductive proximity switch with switch contact, 3-wire-system

The damping element for the inductive proximity switch and the Namur sensor has to consist of magnetic material.

For information about the distance between damping element and sensor refer to the sensor's data sheet.

If more than one damping element is used, all of them must be arranged in an absolute symmetric way.

NOTICE

Please note the manufacturers' instructions of the frequency converter when connecting signals for the speed setpoint.

⚠ WARNING!

The VSM would send setpoint of the frequency converter input parallel to the current and voltage output.

Due to safety reasons, you may use only one output to control the frequency converter (actuator element fuel/air duct and channel).

For a frequency converter requiring a potential-free release contact, you must use an external relay.

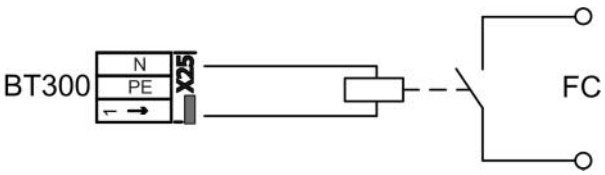

Fig. 7-36 Circuit of external relay for frequency converter

FC = Frequency Converter input

NOTICE

To set up channel 4 (VSM100) on the BT300 control frequency converter must control ventilator. The ventilator must adapt rotational speed according to frequency converter.

7.3.4 Technical Data VSM100

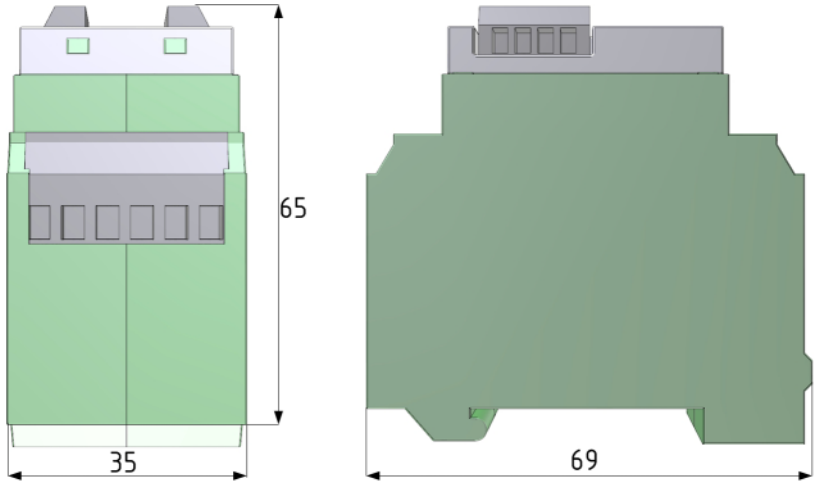

Fig. 7-37 Dimensions VSM100

General data	
Power supply:	24 VDC +10/-15 % SELV
Current consumption:	60 mA
Housing:	Polyamide 6.6 (panel: polycarbonate)
Dimensions:	65x70x35 mm
Weight:	ca. 80 g
Flammability:	UL-94 V0 (panel: UL-94 V2)
Mounting position:	as desired
Installation:	TS35 mounting rail as per EN 50022
Connection cross section:	2.5 mm^2 (plugged LSB terminals: 1.5mm²)
Speed setpoint output 0/4 ... 20 mA	
Max. load:	800 Ω
Resolution:	1000 digit
Short-circuit resistant:	yes, unlimited
Speed setpoint output 0 ... 10 V	
Max. output current:	10 mA
Resolution:	1000 digit
Short-circuit resistant:	yes, unlimited
Speed feedback input 0/4 ... 20 mA	
Load:	150 Ω
Resolution:	1000 digit
Overload protection:	protection against accidental application of voltages up to 28 V
Digital speed feedback input	
Suitable sensors:	optionally 2-wire sensors as per DIN EN 60947-5-6 (Namur) or 3-wire sensors with PNP output (switching against +24 V)
Frequency range:	300 ... 7200 pulses/minute (recording range configurable)

Digital speed feedback input	
Input pulse width:	min. 200 µs

Environmental Conditions		
Operation:	Climatic conditions	Class 3K5 according to DIN EN 60721-3
	Mechanic conditions	Class 3M5 according to DIN EN 60721-3
	Temperature range	-20 ... +60 °C (condensation is prohibited)
Transport:	Climatic conditions	Class 2K3 according to DIN EN 60721-3
	Mechanic conditions	Class 2M2 according to DIN EN 60721-3
	Temperature range	-20 ... +70 °C (condensation is prohibited)
Storage:	Climatic conditions	Class 1K3 according to DIN EN 60721-3
	Mechanic conditions	Class 1M2 according to DIN EN 60721-3
	Temperature range	-20 ... +70 °C (condensation is prohibited)
Electronic safety:	Degree of protection (DIN EN60529)	IP40 housing IP20 terminals

7.4 Expansion Module for LSB - LEM100

The LEM100 adds an LSB interface (CAN) to BurnerTronic. The LEM100 isolates electrically the BT-output and the connected modules.

You must connect 24 V protective low voltage externally to the LEM and the connected modules.

If you want to connect the BurnerTronic to LSB the LEM100 is required.

If you are running BurnerTronic in combination with LCM100 already, you do not need LEM100, because LCM100 has a LSB interface and a 24-V-power-supply integrated.

7.4.1 DIP Switch

You can configure settings of LEM100 using DIP switches.

Functions of DIP switches

You can activate or deactivate the LSB terminating resistor by DIP switch 1.

DIP switch 1		
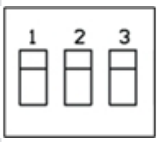		
	1	CAN-Bus activated
	0	CAN-Bus deactivated

DIP switches 2-3 are reserved.

7.4.2 LEDs

LEM100 has 2 LED which should be connected as described below:

LED	Colour	Relevance
PWR	green	**ON:** Device initialized

LED	Colour	Relevance
CAN-Traffic	green	**OFF:** CAN Controller in Bus OFF. No communication possible. **Blinking/ON:** CAN is ready to operate, communication in progress

7.4.3 Electrical Connection

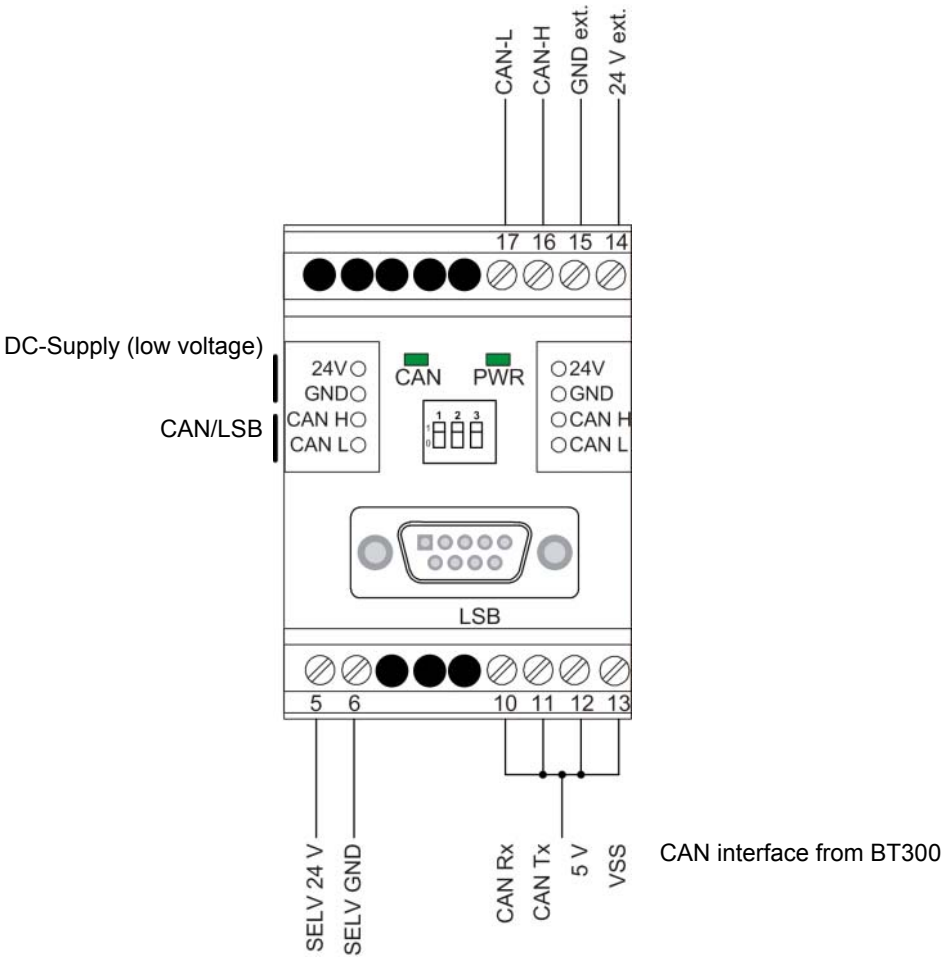

NOTICE

You will find wiring, cable length and definition of the interface in the respective documentation of the field bus systems:
LAMTEC SYSTEM BUS LSB – print no. DLT6095
PROFIBUS – print no. DLT6100

7.4.3.1 Galvanic Isolation

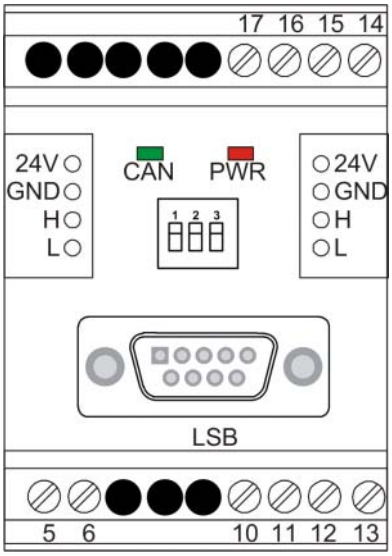

Fig. 7-38 Electrical isolation LEM100

FELV	=	**F**unctional **E**xtra **L**ow **V**oltage **Cannot** be used as safety measure against electrical shock.
SELV	=	**S**afety **E**xtra **L**ow **V**oltage offers protection against electrical shock.

DANGER!

Attention! Short-circuit danger!

An improper wiring connection could lead to a short-circuit, which may cause damages to the connected devices or to an electrical shock.

▶ Please ensure all connections on SELV have a **safe separation** from main voltage in wiring and with connected devices!

7.4.4 Technical Data LEM300

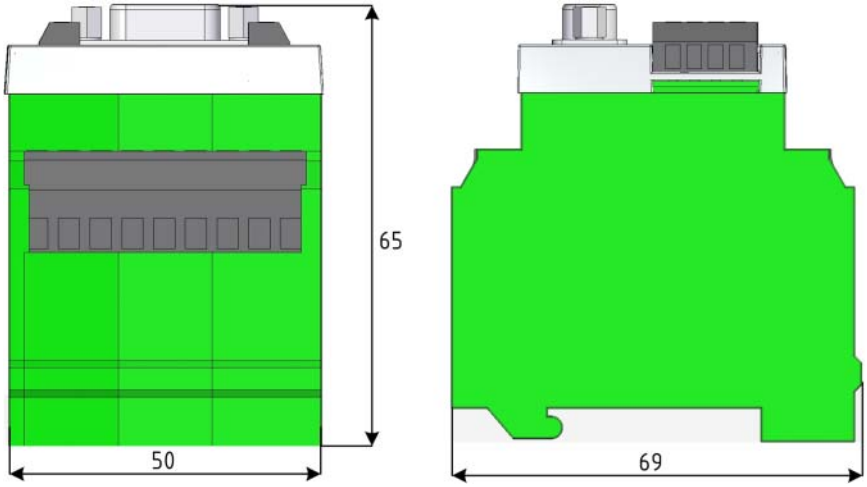

Fig. 7-39 Dimensions LEM100

General data	
Power supply:	24 VDC -10/+15 % SELV
Current consumption:	480 mV (60 mA internal consumption)
Housing:	Polyamide 6.6 (panel: polycarbonate)
Dimensions:	65x70x50 mm
Weight:	approx. 200g
Flammability:	UL-94 V0 (panel: UL-94 V2)
Mounting position:	as desired
Installation:	TS35 mounting rail as per EN 50022
Connection cross section:	2.5 mm^2 (plugged LSB terminals: 1.5 mm²)

24 VDC output	
Rated voltage:	24 VDC
Output current:	ca. 420 mA
Power consumption (IN/OUT):	11,5 W / 10 W
Short-circuit resistant:	yes, unlimited

LAMTEC SYSTEM BUS	
Bit rate:	125 kbit/s
Termination:	Termination: integrated, switched by jumper

Environmental Conditions		
Operation:	Climatic conditions	Class 3K5 according to DIN EN 60721-3
	Mechanic conditions	Class 3M5 according to DIN EN 60721-3
	Temperature range	-20 ... +60 °C (condensation is prohibited)
Transport:	Climatic conditions	Class 2K3 according to DIN EN 60721-3
	Mechanic conditions	Class 2M2 according to DIN EN 60721-3
	Temperature range	-20 ... +70 °C (condensation is prohibited)
Storage:	Climatic conditions	Class 1K3 according to DIN EN 60721-3
	Mechanic conditions	Class 1M2 according to DIN EN 60721-3
	Temperature range	-20 ... +70 °C (condensation is prohibited)
Electronic safety:	Degree of protection (DIN EN60529)	IP40 housing IP20 terminals

7.5 Field Bus Modules

7.5.1 Field Bus Module for PROFIBUS PBM100

The burner control system communicates via LAMTEC SYSTEM BUS (LSB) with its modules consistently. PROFIBUS module PBM100 integrates LAMTEC burner control system into field bus environment (PROFIBUS). PBM100 listens for different, measured process values on LSB, processes these signals and transfers them to field bus.

7.5.1.1 DIP Switch

Use DIP switches to configure settings of PBM100.

Functions of DIP switches

DIP switches 1 - 7		
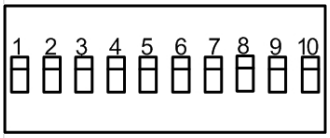	1	Binary coded PROFIBUS address Switch no. 1 = bit 6 Switch no. 7 = bit 0
	0	Example: DIP-Switch 1 2 3 4 5 6 7 — Address 0 0 0 0 0 0 0 — 0 0 0 1 1 0 1 1 — 27 1 1 0 1 1 0 1 — 109 1 1 1 1 1 1 1 — 127

LSB family is set by DIP switch 8-9.

DIP switch 8	DIP switch 9	LSB family
0	0	1
0	1	2
1	0	3
1	1	4

DIP switch 10	
0	CAN terminal resistance inactive
1	CAN terminal resistance active

7.5.1.2 LEDs

PBM100 has 4 LEDs which are connected as described below:

LED	Colour	Description
PWR	green	**ON:** Module working in normal mode = fully initialised and without any fault.
CAN	green	**OFF:** No communication or CAN BUS error **Blinking with 2 Hz:** Errors (optional, if a CAN warning is detectable) **ON:** CAN is ready.
PB	green	**OFF:** no communication via PROFIBUS **ON:** communication without error via PROFIBUS
ERR	red	**OFF:** no errors **ON:** PBM100 Initialisation incomplete or not yet success-fully completed or CAN message missing for more than 3 s.

7.5.1.3 Electrical Connection

Terminals may not be connected!

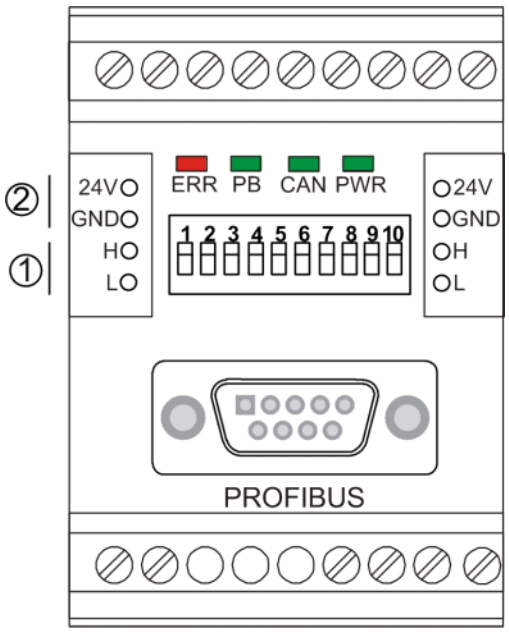

Terminals may not be connected!

1 CAN/LSB

2 DC power supply (safety extra low voltage)

NOTICE

It is prohibited to use the terminals!

NOTICE

You will find wiring, cable length and definition of the interface in the respective documentation of the field bus systems:
LAMTEC SYSTEM BUS LSB – print no. DLT6095
PROFIBUS – print no. DLT6100

7.5.1.4 PROFIBUS Communication

While PBM is connected to PROFIBUS MASTER in active way, following messages were sent to LSB:

Byte position	Description	Note
0 - 1	Operating mode	Bit pattern corresponding to *7.5.3 Appendix*table ’Bit Pattern Operating Mode’
2 - 3	Fault code	Fault codes refer to ’Error Codes BT300’ (DLT1205)
4 - 5	Internal firing rate	Value 0 to 999
6 - 7	Status of digital inputs	Bit pattern corresponding to *7.5.3 Appendix*table ’Bit Pattern Digital Inputs’
8 - 9	Active curve set	Bit pattern corresponding to *7.5.3 Appendix* table ’Bit Pattern curve set’
10 - 11	Outputs, actual curve sets	Bit pattern corresponding to *7.5.3 Appendix*
12 - 13	Setpoint value O_2	Value 0 to 250 → 0,0 % to 25,0 %

Byte position	Description	Note
14 - 15	Operating mode O_2 controller	v 3.0 and higher: Byte 15 active curve set Byte 14 condition corresponding to *7.5.3 Appendix*
16 - 17	Error information O_2 controller	v. 3.0 and higher: Bit pattern corresponding to *7.5.3 Appendix*
18 - 19	Actual value O_2	Actual value O_2 in steps of 0,01 %
20 - 21	Status of actual value O_2	Bit pattern corresponding to *7.5.3 Appendix*
22 - 23	Correction value 1	v3.0 and higher: correction value
24 - 25	Quantity of fuel - oil	Invalid values in current PBM version
26 - 27	Quantity of fuel - gas	Invalid values in current PBM version
28 - 33	Reserved	
34 - 35	Setpoint value boiler temperature/ steam pressure	16 bit integer
36 - 37	Actual value boiler temperature/ steam pressure	16 bit integer
38 - 39	Operating mode CO controller	v3.0 and higher: Bit pattern corresponding to *7.5.3 Appendix*
40 - 41	Error information CO controller	v3.0 and higher: Bit pattern corresponding to *7.5.3 Appendix*
42 - 43	Actual value CO	16 Bit integer
44 - 45	Status of actual value CO	Bit pattern corresponding to *7.5.3 Appendix*
46 - 47	Flue gas temperature	16 bit integer in 0,1 °C
48 - 49	Status of flue gas temperature	Bit pattern corresponding to *7.5.3 Appendix*
50 - 51	Efficiency	0 to 999 in steps of 0,1-%
52 - 53	Status of efficiency	Bit pattern corresponding to *7.5.3 Appendix*
54 - 55	Flame intensity	0 to 100 in steps of 1 %
56 - 57	Actual value monitoring output	16 bit Integer
58 - 59	Burner control state	Bit pattern corresponding to *7.5.3 Appendix*

Tab. 7-1 specification of client input data

The assignment of Packet Data Units of Input data, transferred via PBM from PROFIBUS to LSB:

Byte position	Description
0 - 1	Burner ON (byte 1, bit 0, 1: ON), Fuel pre-selection (byte 1, bit 1, 1: oil, 0: gas), Fault reset (byte 1, bit 2)
2 - 3	Pre-setting burner firing rate, 0 ... 999, Validation bit 15 = 1 (Byte 2, 3 = b1XXXXXXX XXXXXXXX): Sets priority for burner firing rate pre-setting by PROFIBUS
4 - 5	pre-setting status of burner firing rate (actually not in use)
6 - 7	Pre-setting setpoint of burner firing rate controller, 0 ... 999, values correspond to the indication of actual value and setpoint value
8 - 9	Status of burner firing rate controller’s setpoint, Validation bit 15 = 1 (Byte 8, 9 = b1XXXXXXX XXXXXXXX): Evaluation of setpoint value by LCM
10 - 11	Smooth setpoint shift of firing rate controller, int16, value range is defined by upper and lower limits.
12 - 13	Status of smooth setpoint shift of burner firing rate controller Validation bit 15 = 1 (Byte 12, 13 = b1XXXXXXX XXXXXXXX): sets analysis of setpoint shift by LCM

7.5.1.5 Technical Data PBM100

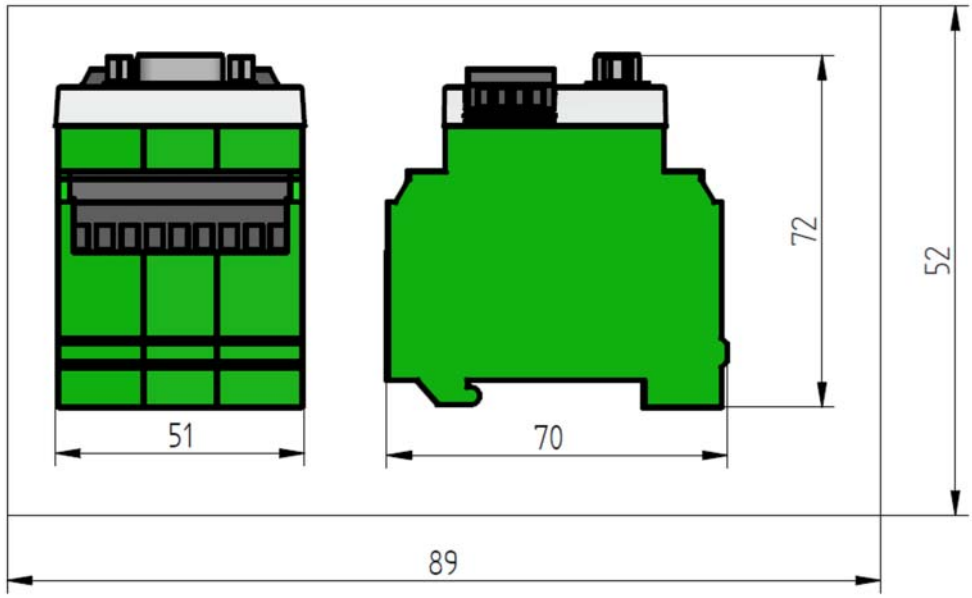

Fig. 7-40 Dimensions PBM100

PBM100	
Power supply:	24 VDC +10/-15% via bus terminals
Current consumption:	100 mA
Housing:	PA6.6 UL94-V0 Cover: Polycarbonate, transparent
Installation:	Support rail TH35 according to EN 60715
Dimensions (H x W x D) [mm]:	72 x 51 x 70
Weight [g]:	105
Flammability:	UL-94 V0 (panel: UL-94 V2)
Lengths of cable:	Supply 24 VDC <10 m LSB: max. 100 m (screened) PROFIBUS: 100 m (screened)
Connection cross-section:	2.5 mm^2 (bus terminals: 1.5 mm^2)
Order no.:	657R5950

Environmental conditions		
Operation:	Climatic condition	class 3K5 as per DIN EN 60721-3
	Mechanical condition	class 3M5 as per DIN EN 60721-3
	Temperature range	-20 ... +60 °C (condensation not permitted)
Transport:	Climatic condition	class 2K3 as per DIN EN 60721-3
	Mechanical condition	class 2M2 as per DIN EN 60721-3
	Temperature range	-20 ... +70 °C (condensation not permitted)
Storage:	Climatic condition	Class 1K3 as per DIN EN 60721-3
	Mechanical condition	Class 1M2 as per DIN EN 60721-3
	Temperature range	-20 ... +70 °C (condensation not permitted)
Electrical safety:	Protection class as per DIN EN60529	IP40 (housing) IP20 terminals

7.5.2 Field Bus Module for MODBUS TCP EBM100

The burner control system communicates via LAMTEC SYSTEM BUS (LSB) with its modules consistently. The MODBUS module EBM100 integrates LAMTEC burner control system into fieldbus environment (MODBUS TCP). EBM100 listens for different, measured process values on LSB, processes these signals and transfers them to fieldbus.

7.5.2.1 IP Configuration

EBM100 network default configuration:

- Static IP address: 192.168.2.100
- Subnet mask: 255.255.255.0 (fix, it cannot be changed)

The IP address is pre-set in BT300 parameters 765 and 766 (BT300 v3.3 and higher).
If EBM100 can't read the parameters during start-up, the last configured IP address remains active.

For your information the red LED is flushing in addition to the Ethernet LED.

Presetting of the IP address		
P 765	MSByte	1. octet
P 765	LSByte	2. octet
P 766	MSByte	3. octet
P 766	LSByte	4. octet

Example: 192.168.2.100 (default IP-Address):

Unit	**1. Octet**	**2. Octet**	**3. Octet**	**4. Octet**
DEZ	192	168	2	100
Parameter	MSByte P 765	LSByte P 765	MSByte P 766	LSByte P 766
HEX	C0	A8	02	64

P 7665 = COA8 (HEX) = 49320 (DEZ)
P 766 = 0264 (HEX) = 612 (DEZ)

If P 765 and P 766 are not configured (default = 0 for each), or both parameters are set to 0, the IP configuration of EBM100 is set to DHCP.

7.5.2.2 DIP Switch

All EBM100 or EBM110 settings are configured by means of DIP switches.

DIP switch no.		**Settings**	
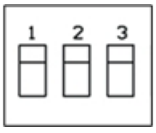	1 - 2	**1 2** 0 0 0 1 1 0 1 1	LSB Family 1 2 3 4
	3	CAN terminal resistance	

Tab. 7-2 Function of the DIP switches

7.5.2.3 LEDs

EBM100 has 4 LED and 2 additional LED at the RJ45 socket, which should be connected as described below:

LED	Colour	Description
PWR	green	**ON:** Module working in normal mode = fully initialised and without any fault.
CAN	green	**OFF:** No communication or CAN BUS error **Flashing with 2 Hz:** Sporadic errors (optional, if a CAN warning is detectable). **ON:** CAN is functioning.
ETH	green	**OFF:** No communication on Ethernet **Flushing with 2 Hz:** Ethernet – Fieldbus is initialised. Master/Client not connected **ON:** Master/Client is connected. Communication by Ethernet is failure free.
ERR	red	**OFF:** No error. **Flashing with 2 Hz:** – No CAN message for more than 3 s. – IP configuration does not correspond with the specifications in the BT parameter. **ON:** EBM100 not ready.
ACT	yellow	**OFF:** No Ethernet activity **Flashing:** Module is sending/receiving Ethernet frames
LINK	green	**OFF:** Ethernet connection is active **Flashing:** – no connection to Ethernet

Tab. 7-3 LED signalling

ERR	ETH	CAN	PWR	Condition
OFF	ON	ON	ON	Device started, no error: – CAN bus OK, – CAN communication OK, – Fieldbus master connected
OFF	Flashing	X*	ON	– Device started – Fieldbus master not connected
Flashing	ON	ON	ON	either – Device started – CAN OK – IP configuration differs to the specification in the burner control or – Device started – Ethernet OK – No communication on CAN Bus for more than 3s
OFF/ Flashing	X*	Flashing	ON	– Device started – CAN bus error – ERR-LED is flashing due to the lack of communication on CAN bus for more than 3 s

ERR	ETH	CAN	PWR	Condition
Flashing	Flashing	Flashing	ON	either – Device started – Connection error CAN and Ethernet or – Device started – Connection error CAN – Ethernet OK – Fieldbus master not connected
ON	OFF	X*	ON	– Error in initialising Ethernet
ON	X*	OFF	ON	– Error in initialising CAN
ON	OFF	OFF	OFF	either – Condition is pending for approx. 1 to 2 s - device is booting or – Condition is permanent - unknown, irreparable error
ON	OFF	OFF	ON	either – Condition is pending for approx. 1 to 2 s - device is rebooting after error or – Condition is permanent - unknown, irreparable error
OFF	OFF	OFF	ON	either – Condition is pending for approx. 1 s (30s max.) - device is initialising or – Condition is permanent - unknown, irreparable error

* Condition is not relevant

Tab. 7-4 Condition of LED signals → device condition

7.5.2.4 Electrical Connection

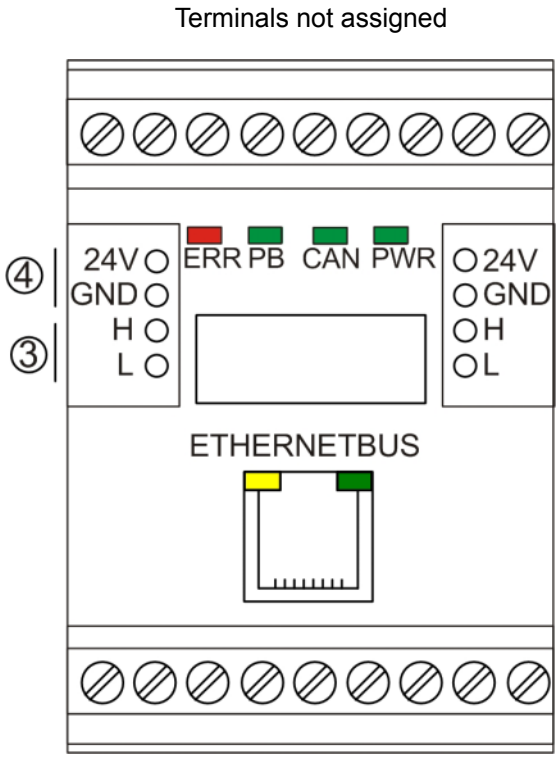

3 CAN/LSB
4 DC supply (low voltage)

NOTICE

To use the terminals is strictly forbidden!

NOTICE

You will find information to wiring, cable length, and interface definition in the documentation of the particular fieldbus systems:
LAMTEC SYSTEM BUS LSB – document no. DLT6095
Ethernet Connection – document no. DLT6096

7.5.2.5 Ethernet Communication

Sending Data on the Modbus/TCP (Master-Input-Data)

In the table below input data are specified, which EBM transfers to the master (Modbus/TCP –Client):

Register*	Description	Configuration
1	Operating mode	Bit pattern corresponding to *7.5.3 Appendix*table 'Bit Pattern Operating Mode'
2	Fault code	Fault codes refer to 'Error Codes BT300' (DLT1205)
3	Internal firing-rate	Value 0 to 999
4	Condition of digital inputs	Bit pattern corresponding to *7.5.3 Appendix*table 'Bit Pattern Digital Inputs'

Register*	Description	Configuration
5	Active curve set	Bit pattern corresponding to *7.5.3 Appendix* table 'Bit Pattern curve set'
6	Condition of digital outputs	Bit pattern corresponding to *7.5.3 Appendix*
7	Setpoint value O_2	Value 0 to 250 → 0,0 % to 25,0 %
8	Operating mode O_2 controller	v 3.0 and higher: Byte 15 active curve set Byte 14 condition corresponding to *7.5.3 Appendix*
9	Cause of fault O_2 controller	v. 3.0 and higher: Bit pattern corresponding to *7.5.3 Appendix*
10	Actual value O_2	Actual value O_2 in steps of 0,01 %
11	Status of actual value O_2	Bit pattern corresponding to *7.5.3 Appendix*
12	Correction value 1	v3.0 and higher: correction value
13	Quantity of fuel - oil	Invalid values in current EBM version
14	Quantity of fuel - gas	Invalid values in current EBM version
15 - 17	Reserved	
18	Setpoint value boiler temperature/steam pressure	16 bit integer
19	Actual value boiler temperature/steam pressure	16 bit integer
20	Operating mode CO controller	v3.0 and higher: Bit pattern corresponding to *7.5.3 Appendix*
21	Cause of fault CO controller	v3.0 and higher: Bit pattern corresponding to *7.5.3 Appendix*
22	Actual value CO	16 Bit integer
23	Status of actual value CO	Bit pattern corresponding to *7.5.3 Appendix*
24	Flue gas temperature	16 bit integer in 0,1 °C
25	Status of flue gas temperature	Bit pattern corresponding to *7.5.3 Appendix*
26	Efficiency	0 to 999 in steps of 0,1-%
27	Status of efficiency	Bit pattern corresponding to *7.5.3 Appendix*
28	Flame intensity	0 to 100 in steps of 1 %
29	Actual monitoring output	16 bit Integer
30	Burner control state	Bit pattern corresponding to *7.5.3 Appendix*

* Register 1 corresponds with address 30001 (start address of the input register: 30001)

Tab. 7-5 specification of client input data

Receiving data from Modbus (master output data)

In the table below output data are specified, which EBM receives from the master (Modbus/ TCP –Client).

Holding register*	Description – Configuration
1	Burner ON: Bit 0, value 1:ON Pre-selection of fuel: Bit 1, value 1: oil; value 0: gas Fault reset: Bit2, value 1: Fault reset is active
2	Pre-setting of burner firing-rate, to 999, Validity bit 15 =1 (b1XXXXXXX XXXXXXXX): sets priority for pre-setting of firing rate by fieldbus
3	Status pre-setting of burner firing rate (not used currently)
4	Presetting of firing rate controller setpoint value 0 to 999 Values are corresponding to the configured notation for actual value and setpoint value

Holding register*	Description – Configuration
5	Status of firing rate controller setpoint Validity bit 15 =1 (b1XXXXXXX XXXXXXXX): sets analysis of setpoint shift by LCM
6	Smooth setpoint shift of firing rate controller (int16), value range is defined by configured upper and lower limits
7	Status smooth setpoint shift of firing rate controller Validity bit 15 =1 (b1XXXXXXX XXXXXXXX): sets analysis of setpoint shift by LCM

* Register 1 corresponds with address 40000 (start address of the input register: 40001)

Tab. 7-6 Specification of master output data

7.5.2.6 Technical Data EBM100

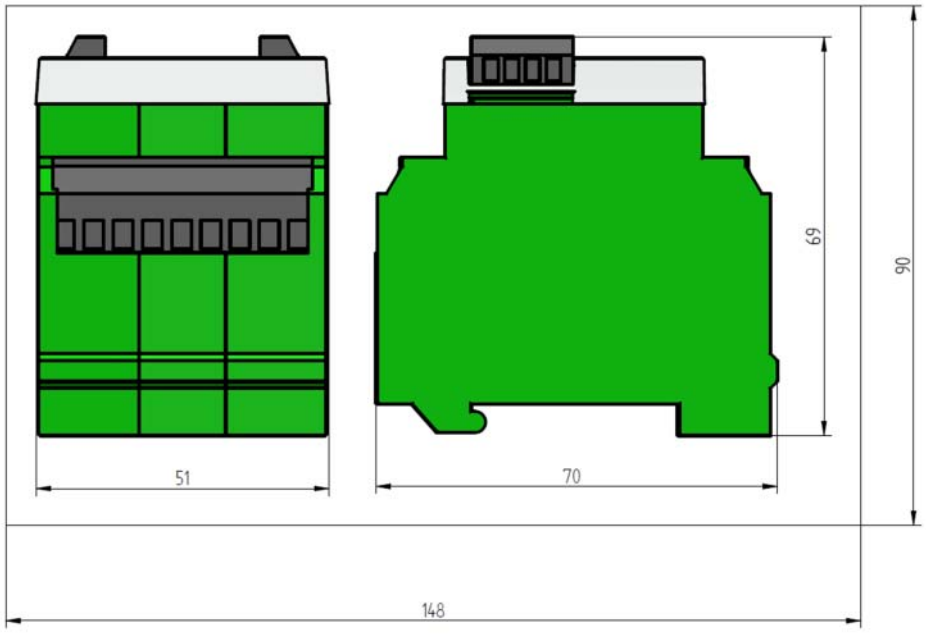

Fig. 7-41 Dimensions EBM100

EBM100	
Power Supply:	24 VDC +10/-15 % (SELV)
Current consumption:	200 mA
Housing:	PA6.6 UL94-V0 Panel: Polycarbonate, transparent
Mounting:	Mounting rail TH35 according to EN 60715
Dimensions:	65x70x50 mm
Weight:	120 g
Flammability:	UL-94 V0 (panel: UL-94 V2)
Cable length:	Supply 24 VDC <10 m Ethernet: according to Ethernet standards
Connection cross section:	2,5 mm^2 Ethernet: RJ45 plug-in connection according to Ethernet standards

Environmental Conditions		
Operation:	Climatic conditions	Class 3K5 according to DIN EN 60721-3
	Mechanic conditions	Class 3M5 according to DIN EN 60721-3
	Temperature range	-20 ... +50 °C (condensation is prohibited)
Transport:	Climatic conditions	Class 2K3 according to DIN EN 60721-3
	Mechanic conditions	Class 2M2 according to DIN EN 60721-3
	Temperature range	-20 ... +70 °C condensation is prohibited)
Storage:	Climatic conditions	Class 1K3 according to DIN EN 60721-3
	Mechanic conditions	Class 1M2 according to DIN EN 60721-3
	Temperature range	-20 ... +70 °C (condensation is prohibited
Electronic safety:	Protection class (DIN EN60529)	IP40 housing IP20 terminals

7.5.3 Appendix

Below the input data are specified, which EBM /PBM transfers to the master:

Bit Pattern Operating Mode

Operating mode	Bit pattern*
POWER ON	XXXX 0000 0000 0001
BURNER OFF	XXXX 0000 0000 0010
BURNER STAND BY	XXXX 0000 0000 0100
PRE-PURGE	XXXX 0000 0000 1000
RUN TO IGNITION POSITION	XXXX 0000 0001 0000
IGNITION PROCESS	XXXX 0000 0010 0000
BASE FIRING-RATE	XXXX 0000 0100 0000
CONTROL MODE	XXXX 0000 1000 0000
POST-PURGE	XXXX 0001 0000 0000
FAULT	XXXX 0010 0000 0000
SETING O_2	0001 XXXX XXXX XXXX
PARAMETERISE	0010 XXXX XXXX XXXX
SETTING	0100 XXXX XXXX XXXX
ERASE MEMORY	1000 XXXX XXXX XXXX

* In 0xF000 and 0x0FFF only one single bit can be set.

Bit Pattern Digital Inputs

Digital input	Active (bit pattern)
Pre-purge suppression	0x8000
Burner ON	0x4000
Fault reset	0x2000
Control release (always 1)	0x1000
Safety interlock circuit gas	0x0800
Firing-rate –	0x0400
Oil pressure > Min	0x0200
Main flame	0x0100

Digital input	Active (bit pattern)
Boiler safety interlock circuit	0x0080
Safety interlock circuit oil	0x0040
Firing rate +	0x0020
External high firing-rate acknowledgement (always 1)	0x0010
Air pressure monitor	0x0008
Gas pressure > Min	0x0004
Ignition acknowledgement	0x0002
Curve set selection = curve set 1	0x0001

Bit Pattern Curve Set

Curve set	Byte 8 (Bit pattern)	Byte 9 (value)
Curve set 1	0000 0001	0
Curve set 2	0000 0010	1

Bit Pattern Digital Outputs

Digital outputs	Active (Bit pattern)
Oil valve 1	0x0001
Pilot valve	0x0002
Oil valve 2	0x0004
Oil pump	0x0008
Gas valve 1	0x0010
Ignition transformer	0x0020
Gas valve 2	0x0040
Fault (inverse)	0x0080
Fan ON	0x0100
Oil valve 3	0x0400
Fuel selection	0x0800

Bit Pattern Operating Mode O_2 Trim

Description	Value
Reserved, not used	0
Internal error of O_2 controller	1
If the fault is pending for more than 1 hour, the system is automatically deactivated	2
Curve set change is running	3
Inactive in operating mode SETTING O_2	4
Inactive in SETTING O_2, CORRECTION PRE-SETING (CO or O_2)	5
Error in SETPOINT CURVE IN EEP (when identifying curve set change)	6
Error in OPTIMISATION CURVE IN EEP (when identifying curve set change)	7
Setpoint curve is empty (< 3 points) (at curve set change)	8
O_2 controller inactive in curve set	9
O_2 controller inactive at BURNER OFF	10

Description	Value
O_2 controller inactive at SETTING/DELETE MEMORY	11
O_2 controller inactive due to O_2 value too small during pre-purge	12
O_2 controller inactive due to O_2 value too high during pre-purge	13
O_2 controller inactive due to O_2-value too high after ignition	14
O_2 controller pre-purge and ignition	15

Bit Pattern Cause of Failure O_2 Trim

Failure cause	Active (Bit pattern)
Too little O_2 during pre-purge	0x0001
Too much O_2 during pre-purge	0x0002
Too much O_2 after ignition	0x0004
Static error in probe dynamic	0x0008
Error: Setpoint curve in operation	0x0010
Error: Optimisation curve in operation	0x0020
1. upper monitoring band misplaced	0x0040
1. lower monitoring band misplaced	0x0080
Half air deficiency is pending	0x0100
O_2 actual value: Invalid actual	0x0400
Firing-rate is out of control range	0x0800
Static air deficiency is pending	0x1000
Air deficiency: Taking countermeasures dynamically is active	0x2000
Probe dynamics: Taking countermeasures dynamically is active	0x4000
Monitoring correction output	0x8000

Bit Pattern Actual Value O_2

State of actual value O_2	Active (Bit pattern)
Underflow	0x0200
Overflow	0x0400
MAINTENANCE MODE	0x0800
Sending a substitute value	0x1000
Warning: Measurement value	0x2000
Failure: Measurement value	0x4000
Measurement value not valid	0x8000

Bit Pattern Operating Mode CO Controller

Operating mode CO controller	Active (Bit pattern)
CO controller is OFF	0x0000
CO controller is released in actual curve set	0x0001
CO controller in standby for correction control	0x0002
CO controller takes over the correction control while the burner in ON	0x0004
CO controller transfers 'inactive' correction value, because O_2 trim shall not take over.	0x8000

Bit Pattern Cause of Failure CO Controller

Failure cause	Active (Bit pattern)
No valid threshold information on LSB available	0x0001
Probe voltage out of monitoring range	0x0002
Probe offset voltage out of monitoring range, or no dynamics	0x0004
Cell resistance out of monitoring range	0x0008
Cell temperature out of monitoring range	0x0010
No probe dynamics visible	0x0020
Internal firing-rate out of parameter set firing-rate ranges.	0x0040
Watchdog processor deactivates CO controller	0x0080
LSB signal deactivates CO controller	0x0100
O_2 monitoring deactivates CO controller	0x0200
Effective probe voltage UCO_e out of monitoring range	0x0400
CO controller is switched OFF temporarily, because CO threshold signal is active for too long.	0x0800
CO controller is switched OFF permanently, because CO threshold signal is active for too long.	0x1000
CO controller is switched OFF temporarily, because CO threshold signal is active for too long after ignition.	0x2000
CO controller is switched OFF permanently, because CO threshold signal is active for too long after ignition.	0x4000

Bit Pattern Actual Value CO

Digital outputs	Active (Bit pattern)
CO threshold not triggered	0x0001
CO threshold triggered/exceeded	0x0002
Threshold not detected by sending device	0x0001 or 0x0002 set
Underflow	0x0200
Overflow	0x0400
MAINTENANCE MODE	0x0800
Sending a substitute value	0x1000
Warning: Measurement value	0x2000
Failure: Measurement value	0x4000
Measurement value valid	0x8000

Bit Pattern Status of Flue Gas Temperature and Efficiency

Digital outputs	Active (Bit pattern)
Underflow	0x0200
Overflow	0x0400
MAINTENANCE MODE	0x0800
Sending a substitute value	0x1000
Warning: Measurement value	0x2000
Failure: Measurement value	0x4000
Measurement value valid	0x8000

Encoding FAT Status

7 Options

Value	Description
01	Switched OFF
02	Permanent purge ON
05	Pre-purge gas
06	Leakage test for pre-purge 2
07	Leakage test for pre-purge 1
08	Ignition position gas
09	Ignition transformer gas
10	Ignition pilot burner gas
11	Ignition gas safety time 1 has expired
12	Ignition gas safety time 2 is running
13	Control of ignition firing-rate gas
19	Switch OFF gas valve 1
20	Switch OFF gas valve 2
21	Leakage test post-purge 2 gas
22	Leakage test post-purge 1 gas
24	Ignition without pilot burner gas, safety time 2 is running
25	Ignition without pilot burner gas, safety time 2 has expired
27	MAINTENANCE MODE GAS
29	Pre-purge oil
30	Ignition position oil
31	Ignition transformer oil
32	Ignition oil line safety interlock circuit
33	Ignition pilot burner oil
34	Ignition oil safety time 1 has expired
36	Ignition oil safety time 2 is running
37	Controlling base load oil
43	Switching OFF oil valve
44	Oil is switched OFF
49	Ignition without pilot burner, safety time 2 is running
50	Ignition without pilot burner, safety time 2 has expired
52	MAINTENANCE MODE OIL
111	Fault
113	Power ON
114	Cold check
200	Switched OFF, post-purge gas
201	Switched OFF, post-purge oil

8 Disposal Notes

The device contains electrical and electronic components and must not be disposed of as domestic waste. The local and currently valid legislation absolutely must be observed.

9 Declaration of Conformity

Sensoren und Systeme für die Feuerungstechnik

LAMTEC

EG-Konformitätserklärung

EC Declaration of Conformity
Déclaration CE de Conformité

Wir (We / Nous)	**LAMTEC Meß- und Regeltechnik für Feuerungen GmbH & Co. KG** **Wiesenstraße 6** **D-69190 Walldorf (Baden)**
erklären, dass die (declare that) (déclarons que)	**BT300 230 VAC/115 VAC – Burner Control System**
inklusive (inclusive) (y compris)	**Varianten 320/330/331/340/341** (variants, variants) **User Interface UI300** **Erweiterungsmodulen:** (additional modules, modules complémentaires)

DFM300	**Dual Fuel Module**
VSM100	**Variable Speed Drive Module**
LCM100	**Load Controler Module**
PBM100	**PROFIBUS Module**
EBM100	**Ethernet Module**
RAST5	**Adapter Module for DFM**
LSA100	**LAMTEC SYSTEM BUS Adapter**
LEM100	**LSB Extension Module**

Produkt-ID-Nummer:
(Product Id Number)
(Numéro d'identification du produit)

BT300 inkl. Varianten (incl. variants, y compris les variants)	**667R13XX-X**
UI300	**667R0100-X**
DFM300	**667R0600-1 / -2**
VSM100	**667R0200-1**
LCM100	**667R0500-1**
PBM100	**667R0700-1**
EBM100	**667R0720-1**
RAST5	**667R0620-1**
LSA100	**667R0300-1**
LEM100	**667R0400-1**

LAMTEC Meß- und Regeltechnik für Feuerungen
GmbH & Co. KG
Wiesenstraße 6
D-69190 Walldorf (Baden)

Telefon: +49 6227 6052-0
Telefax: +49 6227 6052-57

Internet: www.lamtec.de
E-Mail: info@lamtec.de

9 Declaration of Conformity

Sensoren und Systeme für die Feuerungstechnik

LAMTEC

auf welche sich diese Erklärung bezieht, mit den folgenden Norm(en) übereinstimmt
(to which this declaration relates conforms to the following standard(s))
(sur laquelle cette déclaration se réfère, et conformément aux dispositions de la norme(s))

DIN EN 298: 2012-11
DIN EN 1643: 2001-02
DIN EN 12067-2: 2004-06
ISO 23552-1: 2007-10
DIN EN 13611: 2011-12
DIN EN 60730-2-5: 2011-03
DIN EN 60730-1: 2012-10

gemäß den Bestimmungen der folgenden Richtlinie(n).
(according to the provisions of the following directive(s))
(conformément aux dispositions de la directive(s))

Nummer (Number / Numéro)	Text (Text / Texte)
2014/35/EU	Niederspannungsrichtlinie
2014/35/EU	Low Voltage Directive
2014/35/UE	Directive basse tension
2014/30/EU	EMV-Richtlinie
2014/30/EU	EMC Directive
2014/30/UE	Directive CEM
2014/68/EU	Druckgeräterichtlinie Kat.4 Mod. B+D
2014/68/EU	Pressure Equipment Directive
2014/68/UE	Directive équipements sous pression
2009/142/EG	Gasverbrauchseinrichtungen
2009/142/EC	Gas Appliance Directive
2009/142/CE	Directive appareils à gas
2011/65/EU	RoHS
2011/65/EU	RoHS
2011/65/UE	RoHS

Das Datenblatt und gegebenenfalls die Basisdokumentation sind zu beachten.
(The data sheet and basic documentation, if any, have to be considered.)
(La consultation de la fiche technique, et éventuellement de la documentation technique de base, est requise.)

Hinweise zur Anwendung der Richtlinie 2014/35/EU und 2014/30/EU:
Die Konformität mit 2009/142/EG setzt die Übereinstimmung mit 2014/35/EU voraus und beinhaltet diese.
Die Konformität mit 2014/30/EU ist nach Einbau des Bauteils in das Endgerät nachzuweisen und zu erklären.

Remarks regarding the application of directive 2014/35/EU and 2014/30/EU:
Conformity with 2009/142/EC presupposes that requirements of 2014/35/EC are fulfilled and includes these.
Conformity with 2014/30/EC has to be proved and declared after installation of the component.

Remarques sur l'application des directives 2014/35/UE et 2014/30/UE:
La conformité avec la 2009/142/UE intègre la conformité avec la 2014/35/UE.
La conformité avec la 2014/30/UE après l´installation de l´appareil est à prouver et à declarer.

LAMTEC Meß- und Regeltechnik für Feuerungen
GmbH & Co. KG
Wiesenstraße 6
D-69190 Walldorf (Baden)

Telefon: +49 6227 6052-0
Telefax: +49 6227 6052-57

Internet: www.lamtec.de
E-Mail: info@lamtec.de

9 Declaration of Conformity

Sensoren und Systeme für die Feuerungstechnik

LAMTEC

Anbringung der CE-Kennzeichnung: ja
(Placing of the CE-marking)
(L'apposition du marquage CE)

Produkt (product / produit)	Text (Text / Texte)
BT300	CE_{0036} CE-0085 CM0337
UI300	CE
DFM300	CE_{0036} CE-0085 CM0337
VSM100	CE_{0036} CE-0085 CM0337
LCM100	CE
PBM100	CE
EBM100	CE
RAST5	CE
LSA100	CE
LEM100	CE

Walldorf, 20.04.2015
H.J. Altendorf, Geschäftsführung

Rechtsverbindliche Unterschrift
(Authorized signature) (Signature autorisée)

LAMTEC Meß- und Regeltechnik für Feuerungen
GmbH & Co. KG
Wiesenstraße 6
D-69190 Walldorf (Baden)

Telefon: +49 6227 6052-0
Telefax: +49 6227 6052-57

Internet: www.lamtec.de
E-Mail: info@lamtec.de

10 Appendix

10.1 Display Symbols

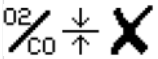	Hint 4: No effects of the CO/O_2 controller.
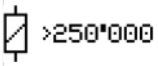	Hint 6: The number of 250 000 burner starts has exceeded.
	Hint 7: Maintenance mode is active.
	Hint 8: Fuel selection is missing.
	Hint 9: Safety interlock chain boiler is not closed (symbol is flashing).
	Hint 10: Air pressure is still pending.
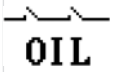	Hint 11: Safety interlock chain oil is not closed (symbol is flashing).
	Hint 12: Safety interlock chain gas is not closed (symbol flashes).
	Hint 13: Ignition position acknowledgement is missing (symbol is flashing).
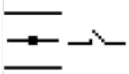	Hint 14: High firing rate acknowledgement is missing (symbol is flashing).
	Hint 15: Air pressure is missing (symbol is missing)
	Hint 19: Valve leakage check is running (symbol is animated).
	Hint 21: Actuators are moving to their upper position.
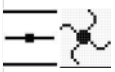	Hint 23: Pre-purge is running.
	Hint 35: Actuators are moving to ignition position.
	Hint 36: Ignition
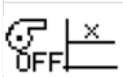	Hint 38: Actual value of the firing rate controller is above the switching point (symbol is flashing).
	Hint 955: Purging is activated permanently (symbol is flashing).

10 Appendix

	Hint 1096: Maintenance of the burner is necessary.
	Hint 2001: The time running between the signal ’Valve is open’ and the signal ’Flame’ is relatively long.
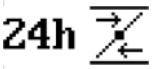	Hint 2002: Dynamic test of the fuel/air ratio control is running.
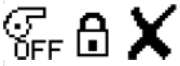	Hint 2003: No burner release but the signal ’Burner ON’ is active.
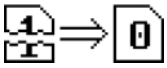	Hint 2004: Data are set back to standard.
	Hint 2005: The automatic restart has failed.
	Hint 2006: Communication between LSB Remote Software and BT300 is interrupted while LSB Remote Software was in SETTING mode.
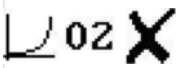	Hint 2007: While saving a firing rate point in an active O_2 curve, writing of an O_2 value was not possible.
	Hint 2008: CPI mode is not possible.
	Hint 2009: Temperature limit and timer are causing a recirculation delay.
	Hint 2101: SETTING mode is not possible. Insufficient access rights!.

10.2 Indication Symbols



Back to previous window.

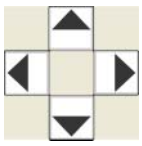

With the cursor keys, you can navigate around the menü.

With the cursor "to left" and "to right", you can move gradually in the selected line.
At the end of the selected line, the cursor would jump to the next line below if it exists.

In multiline menüs, you can switch within the lines with the keys "upwards" and "downwards".

In the parameter display, you can switch between the individual fields.



With the Enter key, you can call up the menü in the startup screen. In a menü window, open the selected submenü. In a parameter window, you can transfer the adjusted values by the Enter key.

10 Appendix



Under the INFO path, you can obtain information regarding:

- Burner
- Fault
- Software version
- Display of the check sums
- Serial number
- Servomotor position (current flap position per channel)
- Digital input/output



Use MANUAL for:

- switching the burner on and off by hand
- setting the internal firing rate



Under the SETTINGS path, you can obtain and set information regarding:

- Password
- Settings of the burner (display and settings)
- Actuator settings (display)
- Air/fuel control
- Delete curve
- Settings of the display



Burner information [selected]



Serial number



Fault History



Configuration of actual value and continuous output
(only display)



Software version



Digital input/output

10 Appendix



Check sums



Display of operating hours [selected]



Number of burner starts



Burner at fault [selected]



Digital input [selected]



Digital output



Password [selected]



Access level (e.g. 1)



Delete curve



Display programme settings

10 Appendix



Burner firing-rate controller settings



Read continuous output configuration



Password settings



Curve settings



Display settings



Length of pre-purge time



Length of post-purge time



Pilot burner oil operation

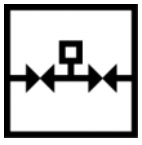

Valve leakage test



Pilot burner gas operation

10 Appendix



Valve leakage test On/Off



Valve leakage test before ignition

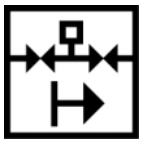

Valve leakage test after ignition



Length of valve leakage test time