CONTROLLERS
TYPES G.. OR.. Series 03N

AUTOMATIC CONTROL SYSTEMS FOR OIL BURNERS

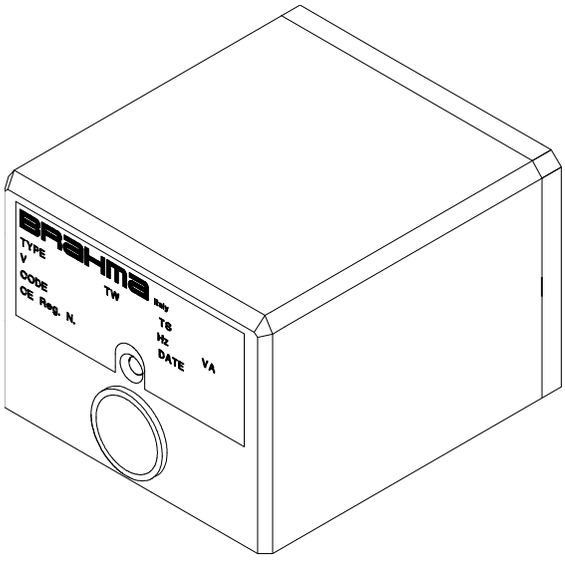

APPLICATION

The electro-mechanical controllers of this series are designed to control oil burners in non-permanent applications.

These controllers are suitable for :

- monoblock burners
- power washers
- hot air generators
- steam boilers
- furnaces

Due to the models technical and constructive features and to their variety they can be used also for the automation of cookers, and of plants employing oil burners generally, whether in domestic or industrial applications. These controllers replace integrally the 03 electro-mechanical series

FEATURES

Table 1 shows the main features of this series.

Other important features are:

- two independent safety contacts for valve driving
- electrical service life at max. declared load > 250.000 operations;
- Easy installation and connection.

TABLE 1

	Single flame	Dual flame	preheater (1)	Thermal range< 30kg/h	Thermal range> 30kg/h	Pre-ignition	Lockout due to extraneous light (2)	FC7/. FC8/ photocells	FC11/. FC13/.photocells
G22	*		*	*		*	*	*	
GF2		*		*		*	*	*	
GF3		*			*	*	*	*	
OR1	*		*	*		*	*		*
OR2		*		*		*	*		*
OR3		*			*	*	*		*

(1) Application is possible with appropriate connection

(2) Function is available only in controllers with 12V and 24V supply voltage and GF2 220V and 110V

ПРОМЭЛЕКТРОНИКА / sales@prom-elec.com

TECHNICAL DATA

Power supply :	220V 50/60Hz
Upon request:	110V 50/60Hz
	24V dc and ac 50/60Hz
	12V dc and ac 50/60Hz
Operating temperature	-10℃ ÷ +60℃
Protection degree (with base)	IP 40
Times	
– Pre-purge time (TV @ 20℃):	15/20 s
– Safety time (TS @ 20℃):	5/10 s
– Response time in case of flame failure:	< 1 s
Power consumption (@220V-50Hz):	6,5 VA
(@12V/24V):	1VA
Internal Fuse	
– For 220V e 110V supply voltage:	6,3 A time-delay
– For 24V e 12V supply voltage:	10 A time-delay
External fuse	
– For 220V e 110V supply voltage:	4 A fast-blow
– For 24V e 12V supply voltage:	10 A fast-blow
Weight including connection base:	**about 240 g**
Max. contacts rating (@220V):	Imax
– Thermostat:	6,0 A cosφ > 0,4
– Motor:	2,0 A cosφ > 0,4
– Ignition transformer:	2,0 A cosφ > 0,4
– EV1:	0,5 A cosφ > 0,4
– EV2:	0,5 A cosφ > 0,4
– Preheater:	0,5 A cosφ = 1,0
– Lockout signal:	1,0 A cosφ = 1,0
Max. contacts rating (@12V e 24V):	Imax
– Thermostat:	10 A cosφ > 0,4
– Motor:	4,0 A cosφ > 0,4
– Ignition transformer:	3,0 A cosφ > 0,4
– EV1:	1,5 A cosφ > 0,4
– EV2:	1,5 A cosφ > 0,4
– Lockout signal:	1,0 A cosφ = 1,0

CONSTRUCTION

The plastic enclosure protects the controller against mechanical damage caused by crash, tempering , dust and dirt of external ambient. An inbuilt fuse protects the controller internal relays in case of short circuit on the outputs (valves, fan and lockout signal);

OVERALL DIMENSIONS

Fig1 shows the controller overall dimensions

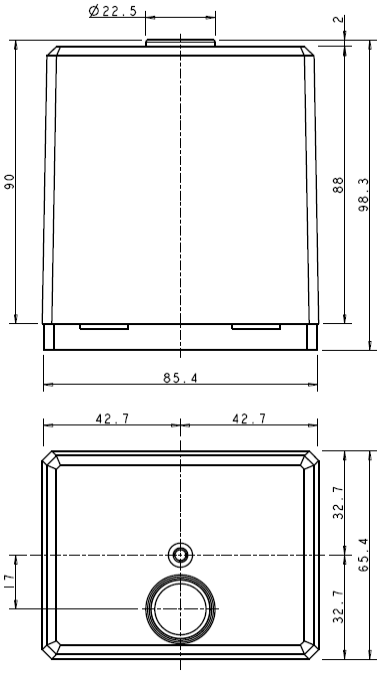

Fig.1

CONNECTION

The connection bases type AB (code 18210130) and N (code 18210095) can be provided to connect the external components to the controller (see Fig. 2). Both bases are provided with screw terminals which allow a safe and easy connection. It's advisable to use M4 screw for fastening purpose.

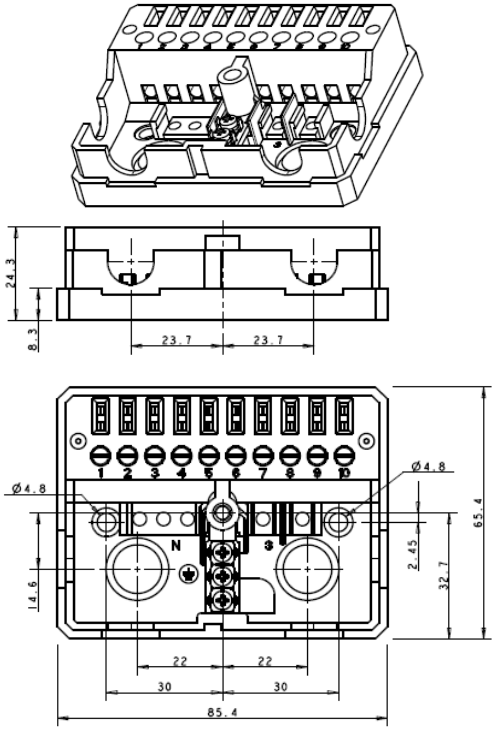

AB Socket

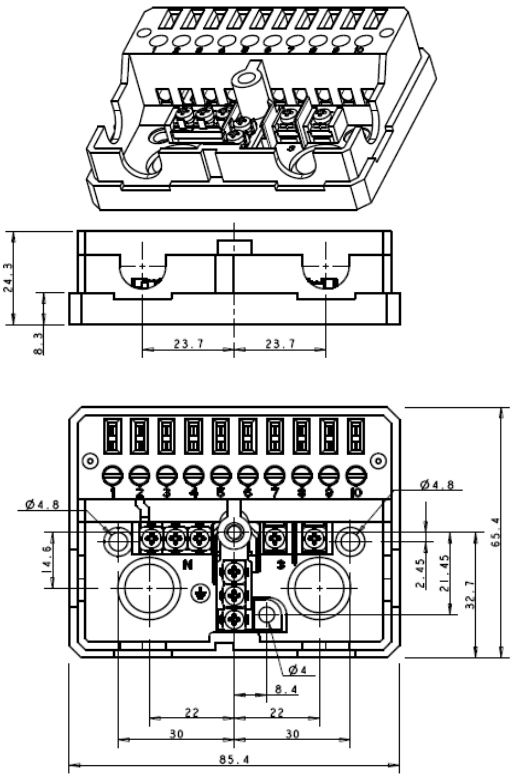

N Socket

Fig.2

ACCESSORIES

The following indications must be considered in order to choose the suitable flame detector for the controller and the application type:

Controller Type		**Photocell**
- G22, GF2, GF3		
	FC8/R	1,5..5,5 lux
Frontal side	FC8/A	1,5..3,0 lux

	FC8/V	5,5.. 10 lux
	FC7/R	1,5..5,5 lux
Lateral side	FC7/A	1,5..3,0 lux
	FC7/V	5,5…10 lux
- OR1, OR2, OR3		
Frontal and lateral side	FC11/R*	1,5..6,5 lux
Frontal and lateral side	FC13/R	1,5..6,5 lux
	FC13/A	1,5..3,0 lux

* The FC11/R is provided with a black plastic enclosure only

The suffix indicates the colour of the photocell enclosure:

/R	red
/A	blue
/V	green

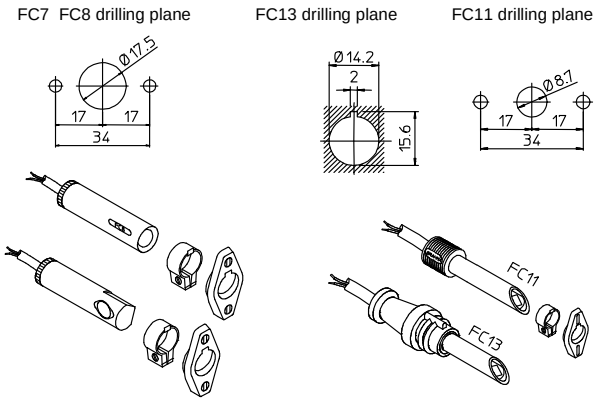

Fig. 3

Fig. 4

The figures (Fig.3) show the types and fixing systems of the available flame detectors.
4 mm diameter screws are suggested To fix the flame detector.
Core hitches and Strain relieves can be fitted on the sides of the controllers enclosures and the connecting bases. These accessories can be supplied upon request (see Fig.5).

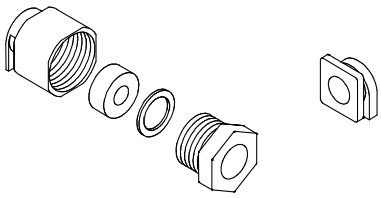

Fig.5

INSTALLATION DIRECTIONS

- The controllers are safety devices; guarantee and responsibility of the manufacturer will be debarred if the products are tempered with by the user;.
- Make sure that a regulation shutdown occurs every 24 hours to allow the controller self-checking its efficiency (non permanent operation systems).
- The controller must be connected and disconnected without power supply.
- The controller can be mounted in any position.
- Avoid exposure to dripping water.
- A ventilated installation ambient and a quite low temperature ensure the longest life of the controller
- Before installing or replacing the controller make sure that its type, code and times are those required

ELECTRICAL INSTALLATION

- The applicable national regulation and European standards (Ex. EN 60335-1/ prEN 50165) related to the electrical safety must be respected;
- **Phase and Neutral or positive pole (+) and negative pole (-)** in case of a direct current must be connected correctly. A mistake can lead to a dangerous condition, as the internal and external protection and safety devices could become inefficient in case the connecting wires of the thermostats and valves lose the isolation.
- Before starting the system check the wiring carefully. Wrong connections can damage the controller and compromise safety.
- The **earth terminal** of the controller, the metal frame of the burner and the **earth** on the mains supply must be well connected
- Avoid putting the photocell cable close to power cables or ignition transformer cables.
- Protect the controller with a fuse suitable to the connected loads
- The appliance where the controller is mounted must provide an adequate protection against the risk of electrical shock

CHECKING AT START

Before any ignition attempt make sure that the combustion chamber is free from oil, then make sure that:

- if the starting attempt occurs with the flame detector obscured the controller performs a lockout at the end of safety time;
- if start up attempt occurs with extraneous light, the controller proceeds to lockout within the time equivalent to safety time (only in versions where this option is available) ;
- when the flame detector is obscured in running position the oil valve(s) is/are de-energized within 1 second, and the controller goes to lockout after a recycle;
  The intervention of regulators, limiters or safety devices causes a shut down of the controller according to the application type;
- Operating times and cycle are in compliance with the ones declared for the used controller type.

OPERATION

Once the thermostats are closed, the controller energizes the burner motor; in this phase the device proceeds to a self-checking process of the flame detection and safety circuit. At the end of pre-purge time the output of the first oil valve is powered. If flame is detected, at the end of safety time, the controller de-energizes the ignition transformer and goes to running position.
At the end of safety time, in the double stage controllers, the ignition transformer is de-energized and, contemporaneously, the output of the second oil valve is energized.
If no flame is detected within safety time, at the end of the same the controller proceeds to lockout and so the valve, ignition transformer and motor are de-energized, and the lockout signal is activated. The following cycle diagrams are useful to better understand the operation of the single controllers.

Abnormal operations

220V and 110V G22 controller: an extraneous light or a fault in the amplifier which corresponds to the flame condition leads to a continuous pre-purge condition
220V and 110V GF2 controller: an extraneous light or a fault in the amplifier which corresponds to the flame condition causes the controller to lockout in the time equivalent to safety time.
All controllers with 24V and 12V: an extraneous light or a fault in the amplifier which corresponds to the flame condition causes the controller to lockout in the time equivalent to safety time.

CONTROLLER RESET

When the controller has gone to lock-out a 10 second interval should be allowed before attempting to reset it; if this interval is not allowed, the controller may not be reset.
Check the controller carefully before the first star-up, after every overhaul and after a long period of non operation.Check the controller carefully before the first star-up, after every overhaul and after a long period of non operation.

FLAME SIGNAL TEST

It's extremely important to test the flame signal level before starting up the burner or in case of a maintenance operation. To effect this test it's enough to have a multimeter and, while the burner is in the running state, to measure the voltage between terminal 9 and the neutral one which must be lower than 0.5V dc, as shown in Fig. 6.
This value guarantees a sufficient safety margin, it corresponds to a double light intensity comparing with the minimum value (the limit value is about 0,8V). in case the value of the measured voltage is higher, try to better orientate the photocell or to clean it.

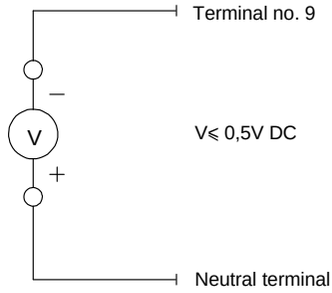

Fig. 6

CONNECTION DIAGRAM

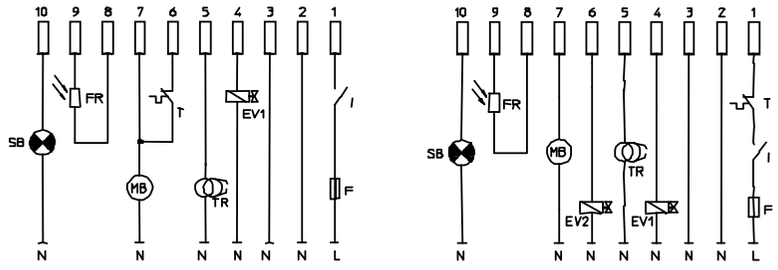

G22 OR1

GF2 GF3 OR2 OR3

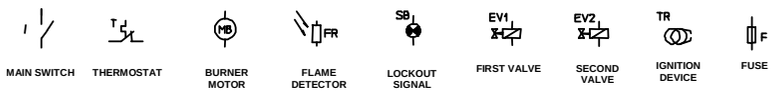

CYCLE DIAGRAMS

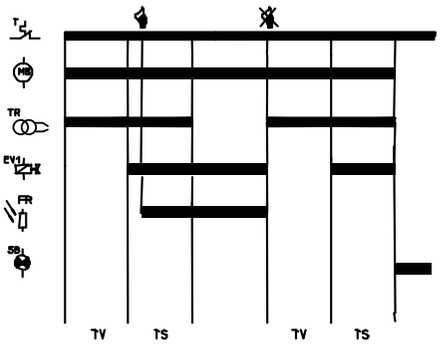

G22 OR1

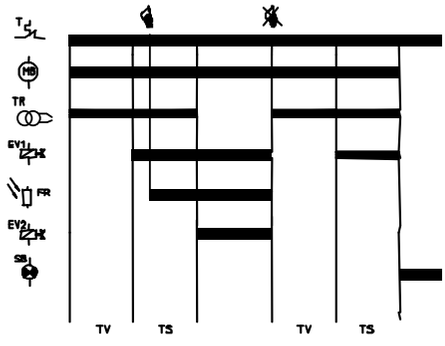

GF2 GF3 OR2 OR3

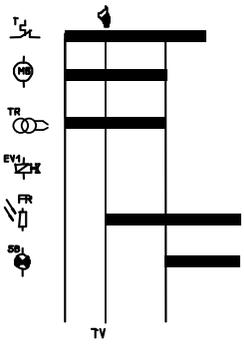

G22 OR1 12V and 24V
GF2 GF3 OR2 OR3

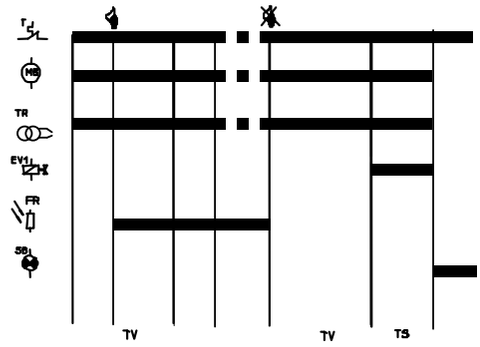

G22 OR1 220V and 110V



ATTENTION -> Brahma S.p.A. accepts no responsibility for any damage resulting from customer's tampering with the product..

BRAHMA S.p.A.
Via del Pontiere, 31
37045 Legnago (VR)
Tel. +39 0442 635211 - Telefax +39 0442 25683
http://www.brahma.it
E-mail : brahma@brahma.it

2012/05/02 Subject to amendments without notice

ПРОМЭЛЕКТРОНИКА / sales@prom-elec.com