Honeywell

RM7824A
7800 SERIES Relay Module

INSTALLATION INSTRUCTIONS



APPLICATION

The Honeywell RM7824A Relay Module is a 24 Vdc microprocessor-based integrated burner control for automatically fired gas, oil or combination fuel single burner applications. The RM7824A consists of the Relay Module, Subbase and Amplifier are required to complete the system. Options include Keyboard Display Module, Personal Computer Interface, Data ControlBus™ Module, Remote Display Module and Combustion System Manager™ Software.

The RM7824A is programmed to provide a level of safety, functional capability and features beyond the capacity of conventional controls.

Functions provided by the RM7824A include automatic burner sequencing, flame supervision, system status indication, system or self-diagnostics and troubleshooting.

This document covers the following 7800 Series RelayModules:

- RM7824A1006
- RM7824A2006

This document provides installation and static checkout instructions. Other applicable publications are:

Form Number	Description
32-00110	S7800A2142 4-line LCD Keyboard Display Module Product Data
32-00166	204729A/C KDM NEMA4 Covers for 4-line LCD KDM
32-00235	R7824, R7847, R7848, R7849, R7861, R7886 Flame Amplifiers for the 7800 SERIES Product Data
65-0084	Q7800A,B 22-Terminal Wiring Subbase Product Data
65-0090	S7800A Keyboard Display Module Product Data
65-0091	S7810A Data ControlBus™ Module Product Data
65-0095	S7820 Remote Reset Module Product Data
65-0097	221729C Dust Cover Packing Instructions
65-0131	221818A Extension Cable Assembly Product Data
65-0228	S7810B Multi-Drop Switch Module Product Data
65-0229	7800 SERIES Relay Modules Checkout and Troubleshooting Product Data
65-0249	S7810M ModBus Module (For CE , Modbus module S7810M1029 only).
65-0295	50023821-001/2 KDM NEMA4 Covers for classic 2-line VFD KDM

Contents

Application 1
Features 2
Specifications 2
Ordering Information 2
Principal Technical Features 5
Safety Provisions 5
Installation 6
Wiring Subbase 8
Operation 12
Checkout 15

EAC

32-00229-01

ПРОМЭЛЕКТРОНИКА / sales@prom-elec.com

FEATURES

- **Safety features:**
  - **Closed loop logic test.**
  - **Dynamic input check.**
  - **Dynamic safety relay check.**
  - **Dynamic self-check logic.**
  - **Expanded safe-start check.**
  - **Internal hardware status monitoring.**
  - **Tamper resistant timing and logic.**
- **Access for external electrical voltage checks.**
- **Application flexibility.**
- **Communications interface capability.**
- **Dependable, long-term operation provided by microcomputer technology.**
- **First-out annunciation and system diagnostics are provided by a 2-row by 20-column Vacuum Fluorescent Display (VFD) located on the optional Keyboard Display Module.**
- **Five light emitting diodes (LEDs) for sequence information.**
- **Flame signal strength.**
- **Local or remote annunciation of RM7824A operation and fault information (optional).**
- **Nonvolatile memory; RM7824A retains history files and sequencing status after loss of power.**
- **Plug-in flame amplifier.**
- **Remote reset (optional).**
- **Report generation (optional).**
- **Shutter drive output.**
- **Burner controller data (optional):**
  - **Hold status.**
  - **Lockout/alarm status.**
  - **Sequence status.**
  - **Sequence time.**
  - **Total cycles of operation.**
  - **Total hours of operation.**
  - **Fault history providing the six most recent faults:**
    - Cycles of operation at the time of the fault.
    - Fault message and code.
    - Hours of operation at the time of the fault.
    - Sequence status at the time of the fault.
    - Sequence time at the time of the fault.
  - **Diagnostic information:**
    - Device type.
    - Flame amplifier type.
    - Flame failure response time.
    - Manufacturing code.
    - On/Off status of all digital inputs and outputs.
    - Software revision and version of RM7824A and optional Keyboard Display Module.
    - Status of configuration jumper.

SPECIFICATIONS

Model: RM7824A Relay Module for the 7800 SERIES.

Electrical Ratings (See Table 1):
Voltage: 24 Vdc (22-28 Vdc).
Power Dissipation: 10W maximum.
Maximum Total Connected Load: 500 VA.
Fusing: Total Connected Load: 15A maximum, Fast Blow, type SC or equivalent.

Environmental Ratings:
Ambient Temperature:
Operating: -40°F to +140°F (-40°C to +50°C).
Storage: -60°F to +150°F (-49°C to +66°C).
Humidity: 85% relative humidity, noncondensing.
Vibration: 0.5G environment.

Dimensions:
See Fig. 1 through 4.

Approvals:
Underwriters Laboratories Inc. Listed: File No. MP268.
ANSI/UL 60730-2-5 / CSA C22.2 No. 60730-2-5 - Automatic Electrical Controls for Household and Similar Use, Part 2-5: Particular Requirements for Automatic Electrical Burner Control Systems
Federal Communications Commission: Part 15, Class B-Emissions.
EAC TC N RU д-US.Аи30.В.04013
SwissRe (formaly IRI): Acceptable.

Table 1. Terminal Ratings.

Terminal No.	Description	Ratings
G	Flame Sensor Ground	—
L2(N)	24 Vdc Common (-)	—
3	24 Vdc Supply (+)	24 Vdc (22 to 28 Vdc).[a]
4	Alarm	24 Vdc, 1A, 5A inrush for 6000 cycles.
5	Unused	—
6	Burner Controller and Limits	24 Vdc, 20 mA.
7	Unused	—
8	Pilot Valve/Ignition	24 Vdc, 5A inrush, 1A continuous.
9	Main Fuel Valve	24 Vdc, 10A inrush, 2A continuous or 50 VA motorized valve.
10	Ignition	24 Vdc, 5A inrush, 1A continuous.
F(11)	Flame Sensor	—
12-21	Unused	—
22	Shutter	24 Vdc, 0.5A.

[a] 500 VA maximum connected load to RM7824A assembly.

Weight:
RM7824A with Dust Cover: 1 pound, 12 ounces, unpacked.

IMPORTANT

Flame Detection System available for use with RM7824A. To select your Plug-in Flame Signal Amplifier and applicable Flame Detector, see Table 2 and Fig. 3.

⚠ CAUTION
Equipment Damage Hazard.
Using wrong software can damage equipment.
To prevent the control from sequencing on power up, RM7824 Relay Modules with software revision 2424 or less should not be used with R7848 Infrared Amplifiers and C7015 Infrared Flame Detectors or R7852 Infrared Amplifiers and C7915 Infrared Flame Detectors, unless a ten-second delay is provided.

Table 2. Flame Detection Systems.

Plug-in Flame Signal Amplifiers					Applicable Flame Detectors		
Type	Color	Self-Checking	Model	Flame Failure Response Time	Fuel	Type	Models
Rectification	Green	Dynamic Self-Check	R7824C[a]	3 seconds	Gas, oil, coal	Ultraviolet (Purple Peeper™)	C7024E,F
Infrared	Red	No	R7848A			Infrared (Lead Sulfide)	C7015
		Dynamic AMPLI-CHECK™	R7848B				
	Red Hatching	No	R7852A				C7915
		Dynamic AMPLI-CHECK™	R7852B				
Optical	White	Dynamic AMPLI-CHECK™	R7851B	0.8 or 3.0 seconds		Optical (UV, Visible Light, IR)	C7927, C7962
		Dynamic Self-Check	R7851C	3 seconds		Optical (UV only)	C7961

[a] Circuitry tests all electronic components in the flame detection system (amplifier and detector) 12 times a minute during burner operation and shuts down the burner if the detection system fails.

Table 3. Sequence Timing For Normal Operation.

Device	Initiate	Standby	Pilot Flame Establishing Period	Run
RM7824A	10 seconds	*	4 or 10 seconds	*

* STANDBY and RUN can be an infinite time period.

Mounting:
Q7800A for panel mount or Q7800B for wall or burner mount.

Required Components:
Plug-in Flame Signal Amplifier; see Fig. 2.
Q7800A or Q7800B Wiring Subbase.

Optional Accessories:

ZM7850A1001	Combustion System Manager™
Q7700A1014	Communication Interface Base Unit.
QS7800A1001	Communication Interface ControlBus Module.
203541	ControlBus 5-wire Electrical Connector
S7810A1009	Data ControlBus™ Module
S7810M1003	ModBus Module
205321B	Flush Mounting Kit for S7800 Keyboard Display Module
S7800AXXXX	Keyboard Display Module: English, Spanish, French.
204718A,B	NEMA 4 and NEMA 1 Weatherproofing kit for 2-line VFD Keyboard Display Module.
203765	Remote Display Mounting Bracket
S7820A1007	Remote Reset Module
221818A	Sixty-inch Extension Cable Assembly.
221818C	120-inch Extension Cable Assembly.
S7800A2142	4-line LCD Keyboard Display Module 204729A/C KDM NEMA4 Covers for 4-line LCD KDM
Q7800A2005/2003, Q7800B2011	Subbases for 2000 Series

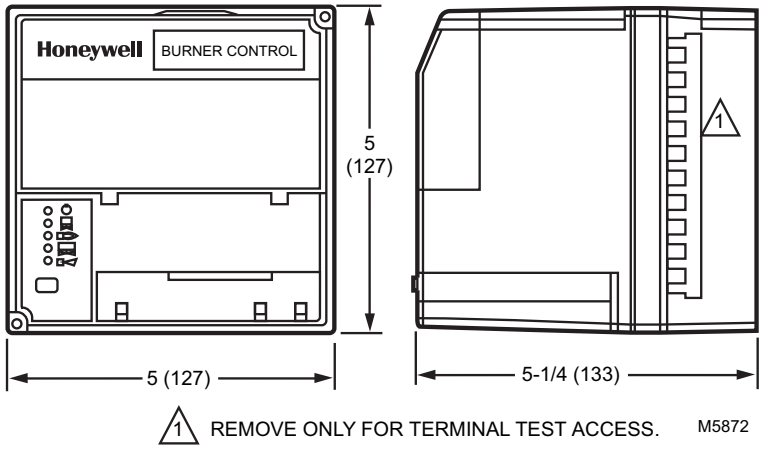

Fig. 1. Mounting dimensions of RM7824A Relay Module and Q7800A Subbase in in. (mm).

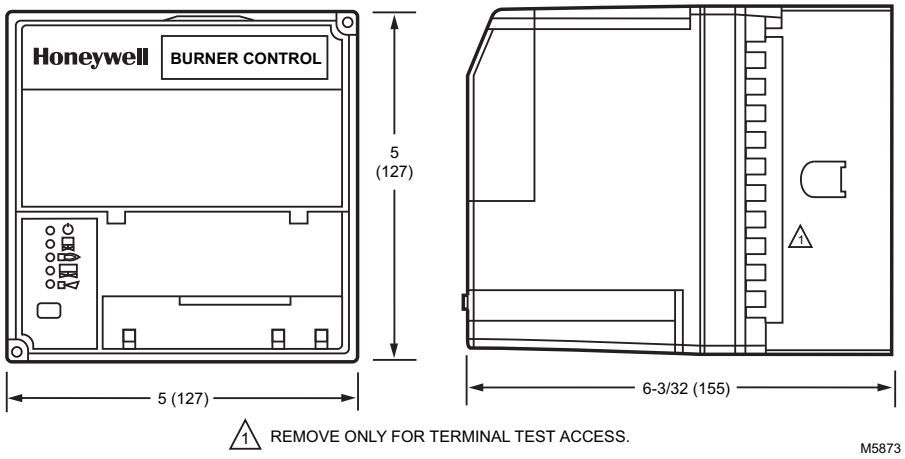

Fig. 2. Mounting dimensions of RM7824A Relay Module and Q7800B Subbase in in. (mm). Dust Cover is part number 221729A.

PRINCIPAL TECHNICAL FEATURES

The RM7824A provides all customary flame safeguard functions while providing significant advancements in the areas of safety, annunciation and system diagnostics.

Safety Shutdown (Lockout) Occurs If:

1. INITIATE PERIOD.
   a. 24 Vdc power errors occurred, see Operation section.
   b. Configuration jumper has been changed (after 200 hours).
   c. Four minute INITIATE period has been exceeded.
2. STANDBY PERIOD.
   a. Flame signal is present after 40 seconds.
   b. Ignition/intermittent pilot valve terminal is energized.
   c. Internal system fault occurred.
   d. Main valve terminal is energized.
3. SAFE START CHECK.
   a. Flame signal is present.
   b. Ignition/intermittent pilot valve terminal is energized.
   c. Internal system fault occurred.
   d. Main valve terminal is energized.
4. PILOT FLAME ESTABLISHING PERIOD (PFEP).
   a. Ignition/intermittent pilot valve terminal is not energized.
   b. Internal system fault occurred.
   c. Main valve terminal is energized.
   d. No flame present at end of PFEP.
5. RUN PERIOD.
   a. Ignition terminal is energized.
   b. Internal system fault occurred.
   c. Main valve terminal is not energized.
   d. No flame present.
   e. Pilot valve terminal is not energized.

SAFETY PROVISIONS

Internal Hardware Status Monitoring

The RM7824A analyzes the integrity of the configuration jumper and internal hardware. The POWER LED will blink every four seconds, signifying an internal hardware check.

Closed Loop Logic Test

The test verifies the integrity of all safety critical loads, terminals 8, 9 and 10. If the loads are not energized properly; i.e., the main valve terminal is powered during STANDBY, the RM7824A will lockout on safety shutdown. The RM7824A must react to input changes but avoid the occurrence of nuisance shutdown events. Signal conditioning is applied to 24 Vdc voltage inputs to verify proper operation in the presence of normal electrical line noise such as transient high voltage spikes or short periods of voltage dropout.

Dynamic Flame Amplifier and Shutter Check

Self-checking circuitry tests all electronic components in the flame detection system and amplifier twelve times per minute and shuts down the RM7824A if the detection system fails.

Dynamic Input Check

All system input circuits are examined to assure that the RM7824A is capable of recognizing the true status of external controls, limits and interlocks. If any input fails this test, a safety shutdown occurs and the fault will be annunciated.

Dynamic Safety Relay Test

Checks the ability of the dynamic safety relay contact to open and close. Verifies that the safety critical loads, terminals 8, 9 and 10, can be de-energized, as required, by the Dynamic Self-check logic.

Dynamic Self-Check Safety Circuit

The microcomputer tests itself and related hardware, and at the same time, the safety relay system tests the microcomputer operation. If a microcomputer or safety relay failure occurs and does not allow proper execution of the
self-check routine, safety shutdown occurs and all safety critical loads will be de-energized.

Expanded Safe-Start Check

The conventional safe-start check, which prevents burner start-up if flame is indicated at start-up, is expanded to include a flame signal check during STANDBY and a safety critical load check.

Off Cycle (Standby) Flame Signal Check

The flame detection subsystem (flame detector and amplifier) is monitored during STANDBY. If a flame simulating condition or an actual flame exists for 40 seconds in STANDBY, a safety shutdown occurs and startup is prevented. If the flame signal exists at any time after the 40 seconds during STANDBY, a safety shutdown occurs and is annunciated. The self-checking detector is energized for the first 40 seconds during STANDBY and the last two seconds before exiting STANDBY. If a flame exists after the first 40 seconds during STANDBY, the self-checking detector is energized during the last ten seconds of the 40 second flame detection period. If a flame exists, a safety shutdown occurs.

Safety and logic timings are inaccessible and cannot be altered or defeated.

Verified Spark Termination

The ignition terminal is monitored to assure early spark termination (ten seconds ignition and pilot and ten seconds *pilot and main only*).

First-Out Annunciation and Self-Diagnostics

Sequence Status Lights (LEDs) provide positive visual indication of the program sequence: POWER, PILOT, FLAME, MAIN and ALARM. The green POWER LED blinks every four seconds, signifying that the RM7824A hardware is running correctly.

Optional multi-function Keyboard Display Module shows elapsed time during PILOT IGNITION. As an additional troubleshooting aid, it provides sequence timing, diagnostic information and historical information during normal operation or when a safety shutdown or hold occurs.

First-out Annunciation reports the cause of a safety shutdown or identifies the cause of a failure to start or continue the burner control sequence with an English text and numbered code via the optional Keyboard Display Module. It monitors all field input circuits, including the flame signal amplifier. The system distinguishes 39 modes of failure and detects and annunciates difficult-to-find intermittent failures.

Self-diagnostics add to the First-out Annunciation by allowing the RM7824A to distinguish between field (external device) and internal (system related) problems. Faults associated within the flame detection subsystem or RM7824A are isolated and reported by the optional Keyboard Display Module. See the 7800 SERIES System Annunciation Diagnostics and Troubleshooting, form 65-0118.

INSTALLATION

⚠ WARNING

Fire or Explosion Hazard.
Can cause severer injury, death or property damage.
To prevent possible hazardous burner operation, perform verification of safety requirements each time a control is installed on a burner.

When Installing this Product...

1. Read these instructions carefully. Failure to follow them could damage the product or cause a hazardous condition.
2. Check the ratings given in the instructions and marked on the product to make sure the product is suitable for your application.
3. Installer must be a trained, experienced, flame safeguard service technician.
4. After installation is complete, check out the product operation as provided in these instructions.

⚠ WARNING

Electrical Shock Hazard.
Can cause severe injury, death or property damage.
To prevent electrical shock and equipment damage, disconnect the power supply before beginning installation. More than one power supply disconnect may be involved.

1. To prevent electrical shock and equipment damage, disconnect the power supply before beginning installation. More than one power supply disconnect may be involved.
2. Wiring connections for the RM7824A are unique; therefore, refer to Fig. 7 or the correct specifications for proper subbase wiring.
3. Wiring must comply with all applicable codes, ordinances and regulations.
4. Wiring, where required, must comply with NEC Class 1 wiring.

5. Loads connected to the RM7824A must not exceed those listed on the RM7824A label or the specifications (see Table 1).
6. Limits and interlocks must be rated to carry and break current simultaneously to the ignition transformer, pilot valve, and main fuel valve(s).
7. All external timers must be listed or component recognized by authorities who have jurisdiction for the specific purpose for which they are used.

IMPORTANT INSTALLATION NOTICE

1. *R7824C flame signal amplifier is UL60730-2-5 compliant for connection to a flame detector using wire up to 32 ft (10 m) in length.*
2. *To properly shield the 7800 SERIES Relay Module and the mating R7852 flame amplifier from any outside noise, both must be mounted in an enclosed metal panel or cabinet, properly referenced to earth ground. All wire leads to the panel / cabinet must be installed in metal conduit(s). C7915 viewing head wiring must be separated from other wiring and must use separate conduit. All conduits must be conductively connected to the panel / cabinet. If these are not mounted per this specification, a false positive flame on from the viewing head is possible.*
3. *For on-off gas-fired systems, some authorities who have jurisdiction prohibit the wiring of any limit or operating contacts in series between the flame safeguard control and the main fuel valve(s).*
4. *Two C7024E,F Detectors can be connected in parallel.*
5. *This equipment generates, uses and can radiate radio frequency energy, and if not installed and used in accordance with the instructions, may cause interference to radio communications. It has been tested and found to comply with the limits for a Class B computing device of part 15 of FCC rules, which are designed to provide reasonable protection against such interference when operated in a commercial environment. Operation of this equipment in a residential area may cause interference, in which case the users, at their own expense, may be required to take whatever measures are required to correct this interference.*
6. *This digital apparatus does not exceed the Class B limits for radio noise of digital apparatus set out in the Radio Interference Regulations of the Canadian Department of Communications.*

Humidity

Install the RM7824A where the relative humidity never reaches the saturation point. The RM7824A is designed to operate in a maximum 85 percent relative humidity, continuous, noncondensing moisture environment. Condensing moisture can cause a shutdown.

Vibration

Do not install the RM7824A where it could be subjected to vibration in excess of 0.5G continuous maximum vibration.

Weather

The RM7824A is not designed to be weather tight. When installing outdoors, protect the relay module using an approved weather-tight enclosure.

Mounting Wiring Subbase

NOTE: For installation dimensions, see Fig. 1 or 2.

1. Mount the subbase in any position except horizontally with the bifurcated contacts pointing down. The standard vertical position is recommended. Any other position decreases the maximum ambient temperature rating.
2. Select a location on a wall, burner or in an electrical panel. The Q7800 can be mounted directly in the control cabinet. Be sure to allow adequate clearance for servicing, installation, access and removal of the RM7824A, dust cover, flame amplifier, flame amplifier signal voltage probes, electrical signal voltage probes and electrical field connections.
3. For surface mounting, use the back of the subbase as a template to mark the four screw locations. Drill the pilot holes.
4. Mount the subbase securely using four No. 6 screws.

Relay Module and Subbase Compatibility

NOTE: There are several different subbase models that can be purchased. It is important to note which subbase is compatible with the relay module when purchasing new, repair or replacement parts.

Series 1000 Relay Modules

All relay product codes that start with a 1 (example: RM7840G**1**014/U) can be used with existing subbase Q7800A1003/U and Q7800A1005/U.

Series 2000 Relay Modules

All relay product codes that start with a 2 (example: RM7840G**2**014/U) must be used with subbase Q7800A2003/U and Q7800A2005/U.

Subbase Compatibility

Any Relay Module in the 1000 Series with a Software Revision level number starting with a "5" or greater will be compatible with all subbase models both installed and newly purchased. This includes (Q7800A1005/U, Q7800B1003/U), and the 2000 Series subbases (Q7800A2005/U, Q7800B2003/U).

See Fig. 6 for Software Revision Level number location on the label (located on the rear of the relay module).

Any relay module in the new 2000 series will only be able to be installed on subbase Q7800A2005/U, Q7800B2003/U and will not be backward compatible with any Q7800A1003/U and Q7800A1005/U subbases already installed in the field.



Fig. 3. Software revision location.

IMPORTANT

Make sure to check the relay model number and the software revision level on the relay.

5. If you attempt to place a 2000 series relay on a non-compatible 1000 series subbase, you will receive an error code of 101. This indicates that you must a) change out the subbase to a Q7800A2003/U or Q7800A2005/U or b) choose a compatible 1000 series relay module.

WIRING SUBBASE

⚠ WARNING

Electrical Shock Hazard.
Can cause serious injury, death or equipment damage.
Disconnect the power supply before beginning installation to prevent electrical shock, equipment and control damage. More than one power supply disconnect may be required.

1. General
   a. For the internal block diagram of the RM7824A, see Fig. 7.
   b. For proper subbase wiring, refer to Fig. 8.
   c. For proper remote wiring of the Keyboard Display Module; refer to the Specifications for the Keyboard Display Module (65-0090), Communication Interface Base Unit (63-2278), Data ControlBus™ Module (65-0091), or Extension Cable Assembly (65-0131).

2. Disconnect the power supply from the main disconnect before beginning installation to prevent electrical shock and equipment damage. More than one disconnect may be involved.

3. All wiring must comply with all appropriate electrical codes, ordinances and regulations. Wiring, where required, must comply with NEC Class 1 wiring.

4. Recommended wire size and type: Use No. 14, 16, or 18 copper conductor (TTW60C or THW75C or THHN90C) 600 volt insulation wire for all low voltage terminals. For high temperature installations, use wire selected for a temperature rating above the maximum operating temperature. All leadwires must be moisture resistant.

5. The maximum number of wires per terminal is two. If more than two wires need to be connected to a terminal, wire one of the wires to the terminal and use a wire nut to connect the other wires inside the subbase.

6. Recommended wire routing for flame detector leadwires:
   a. Do not run high voltage ignition transformer wires in the same conduit with the flame detection wiring.
   b. Do not route scanner wires in a conduit with line voltage circuits.
   c. Enclose scanner wires without armor cable in metal cable or conduit.
   d. Follow directions given in the flame detector instructions.

7. Maximum wire lengths:
   a. For the RM7824A, the maximum length of leadwire to the control terminal input is 300 feet.
   b. For the flame detector leadwires, the maximum flame sensor leadwire length is limited by the flame signal strength.

8. Make sure loads do not exceed the terminal ratings. Refer to the label on the RM7824A or to the ratings in the specifications; see Table 1.

9. Check the power supply circuit. The voltage tolerance must match those of the RM7824A. A separate power supply circuit may be required for the RM7824A with the required disconnect means and overload protection added.

10. Check all wiring circuits and complete the Static Checkout section before installing the RM7824A on the subbase; see Table 5.

11. Install all electrical connectors.

12. Restore power to the panel.

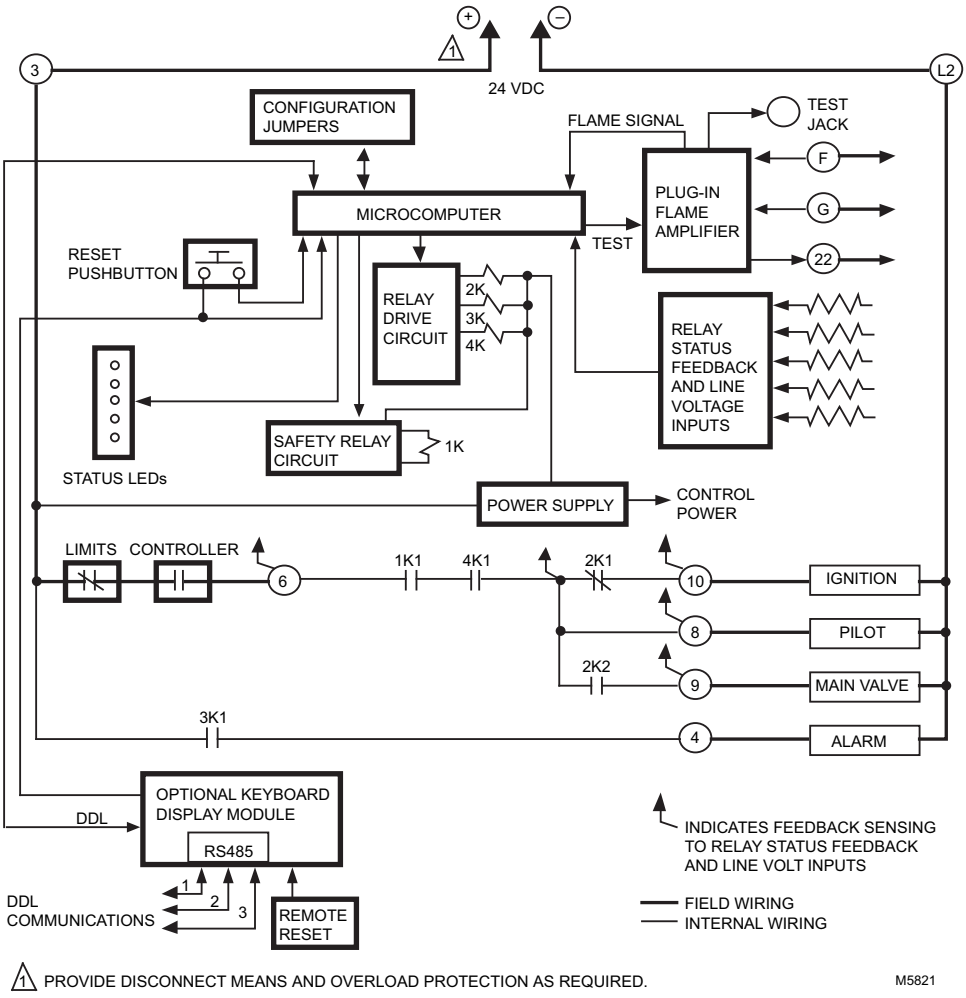

Fig. 4. Internal block diagram of the RM7824A (see Fig. 8 for detailed wiring instructions).

ASSEMBLY

Mounting RM7824A

NOTE: For installation dimensions, see Fig. 1 or 2.

Relay Module Mounting

1. Mount the RM7824A vertically, see Figs. 8 or 9, or mount horizontally with the knife blade terminals pointing downward. When mounted on the Q7800A, the RM7824A must be in an electrical enclosure.
2. Select the location in the electrical enclosure. Be sure to allow adequate clearance for servicing, installation and removal of the RM7824A, dust cover, flame amplifier, flame amplifier signal voltage probes, electrical signal voltage probes and electrical connections.
   a. Allow an additional two inches below the RM7824A for the flame amplifier mounting.
   b. Allow an optional three-inch minimum to both sides of the RM7824A for electrical signal voltage probes.
3. Make sure no subbase wiring is projecting beyond the terminal blocks. Tuck in wiring against the back of the subbase so it does not interfere with the knife blade terminals or bifurcated contacts.

IMPORTANT

The RM7824A must be installed with a plug-in motion rather than a hinge action.

4. Mount the RM7824A by aligning the four L-shaped corner guides and knife blade terminals with the bifurcated contacts on the wiring subbase and securely tightening the two screws. Do not tighten the screws to the point where they deform the plastic of the RM7824A case.

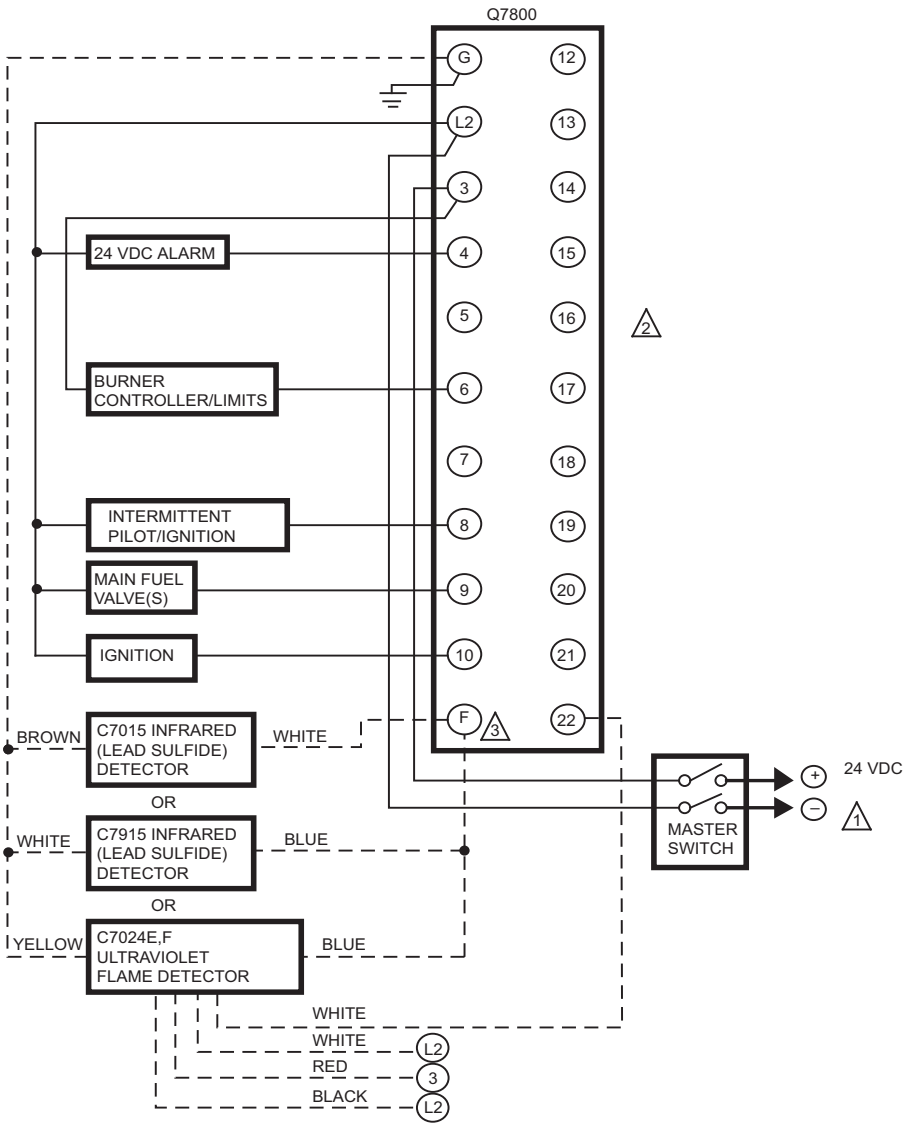

1 24 VDC POWER SUPPLY. PROVIDE DISCONNECT MEANS AND OVERLOAD PROTECTION AS REQUIRED.

2 DO NOT CONNECT ANY WIRES TO UNUSED TERMINALS.

3 FOR A CONTINUOUS OR STANDING PILOT, INSTALL AN EXTERNAL RELAY TO SWITCH THE F LEAD. THE RELAY MUST HAVE GOLD-CLAD OR GOLD-FLASH CONTACTS AND A 120 VAC COIL. POWER THE RELAY COIL FROM THE Q7800 SUBBASE TERMINAL 8. CONNECT THE RELAY CONTACTS BETWEEN THE F LEAD OF THE DETECTOR AND THE F TERMINAL OF THE Q7800 SUBBASE. A 24 VDC RELAY IS ACCEPTABLE TO USE IN THIS TYPE OF APPLICATION. USE THE N.O. PILOT DUTY CONTACTS.

M5820B

Fig. 5. Wiring the RM7824A.

Mounting Dust Cover

1. Align the two interlocking ears of the Dust Cover with the two mating slots on the RM7824A (see Fig. 11).
2. Insert the two interlocking ears into the two mating slots, and with a hinge action, push on the upper corners of the Dust Cover to secure it to the RM7824A.
3. Be sure the Dust Cover is firmly in place.

Installing Plug-In Flame Signal Amplifier

NOTE: See 32-00235 for details about flame signal amplifiers and detectors.

1. Disconnect the power supply before beginning installation to prevent electrical shock and equipment damage. More than one disconnect may be involved.
2. Align the amplifier circuit board edge connector with the keyed receptacle on the RM7824A. Verify that the amplifier nameplate faces away from the Relay Module (see Fig. 11).
3. Push in the amplifier until the circuit board is fully inserted into the receptacle and then push the amplifier toward the RM7824A retaining clasp.
4. Verify the amplifier is firmly in place.
5. Perform all required checkout tests.



Fig. 6. Electrical panel installation.



Fig. 7. Wall or burner installation.

Installing Flame Detector

NOTE: Table 2 and Fig. 13 list the flame detectors available for use with the RM7824A. Make sure the correct combination of amplifier and flame detector(s) is used.

Proper flame detector installation is the basis of a safe and reliable flame safeguard installation. Refer to the instructions packed with the flame detector and the equipment manufacturer instructions.

Keep the flame signal leadwires as short as possible from the flame detector to the wiring subbase. Capacitance increases with wire length, reducing the signal strength. The maximum permissible leadwire length depends on the type of flame detector, leadwire and conduit. The ultimate limiting factor in the flame detector leadwire is the flame signal (see Table 6).



Fig. 8. Dust Cover mounting.



Fig. 9. Flame signal amplifier mounting.

OPERATION

Sequence of Operation

The RM7824A has the following operation sequence (see Figs. 14 and 16).

Initiate

The RM7824A enters the INITIATE sequence if the Relay Module verifies voltage fluctuations of outside 22 to 28 Vdc during any part of the operating sequence. The INITIATE sequence lasts for ten seconds unless the voltage tolerance is not met. When the tolerance is not met, a hold condition will be initiated and will be displayed on the optional Keyboard Display Module for at least five seconds. When the tolerance is met, the INITIATE sequence will restart. If the condition is not corrected and the hold condition exists for four minutes, the RM7824A will lock out. Causes for hold conditions in the INITIATE sequence are:

- Vdc dropout is detected.
- Internal timing functions are not synchronized.
- The noise that can prevent a sufficient reading of the low voltage inputs.
- Brownouts caused by low input voltage.

Standby

The RM7824A is ready to start an operating sequence when the operating control input determines a call for heat is present. The burner switch, limits, operating limit control and all microcomputer monitored circuits must be in the correct state for the RM7824A to continue into the SAFE-START CHECK.

Normal Start-Up Safe-Start Check

The RM7824A verifies that a flame does not exist and proceeds into the ignition trial. If a flame is present, the RM7824A will recycle to the STANDBY period. If the critical loads are not in the correct state, a safety shutdown occurs.

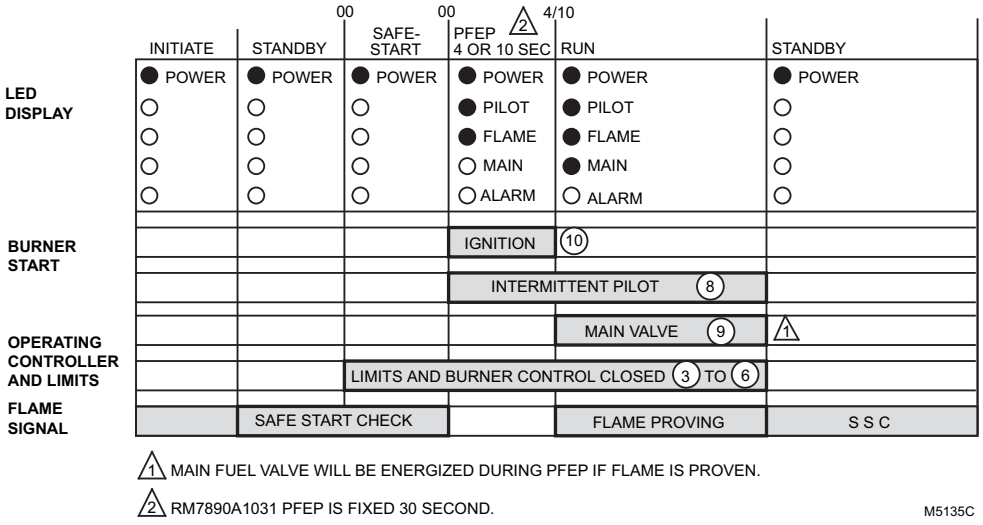

Fig. 10. RM7824A sequence.

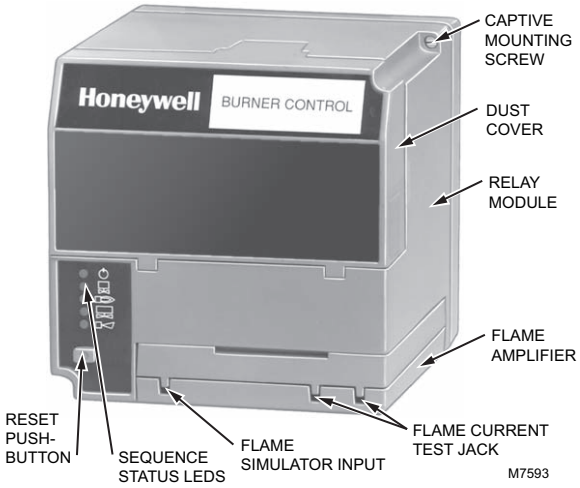

Fig. 11. Sequence status LEDs.

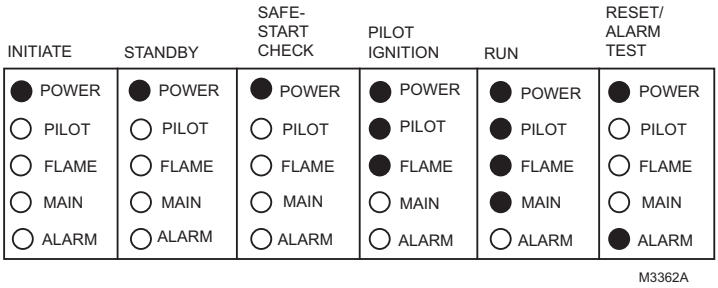

Fig. 12. LED sequence status display information (see Fig. 15).

Ignition Trials

Pilot Flame Establishing Period (PFEP):

1. The pilot valve and ignition transformer, terminals 8 and 10, are energized. The RM7824A has an intermittent pilot valve, terminal 8.
2. Flame must be proven by the end of the 4 or 10 second PFEP to allow the sequence to continue. If flame is not proven by the end of PFEP, a safety shutdown occurs.
3. With flame proven, the ignition, terminal 10, is de-energized and the main valve, terminal 9, is energized.

Run

The RM7824A is now in RUN and will remain in RUN until the controller input, terminal 6, opens, indicating that the demand is satisfied or a limit has opened.

Selectable Site-Configurable Jumper

The RM7824A has one site-configurable jumper option, see Fig. 17 and Table 4. The site-configurable jumper should be clipped with side cutters and the resistor removed from the Relay Module.0

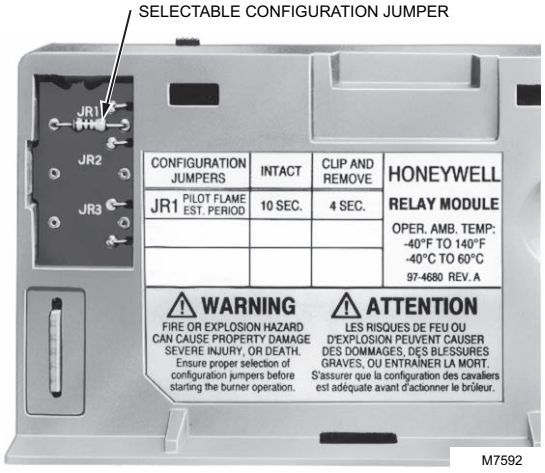

Fig. 13. Selectable site-configurable jumpers.

Table 4. Site-Configurable Jumper Options.

Jumper Number	Description	Intact	Clipped
JR1	Pilot Flame Establishing Period	10 seconds	4 seconds

IMPORTANT

After 200 hours of operation, the configuration jumper cannot be changed. If it is changed after 200 hours of operation, the RM7824A locks out. The RM7824A cannot be reset and has to be replaced.

SERVICE NOTE: Clipping and removing a site-configurable jumper enhances the level of safety.

STATIC CHECKOUT

⚠ WARNING

Fire, Explosion or Electrical Shock Hazard.
Can cause severe injury, death or property damage.

1. Use extreme care while testing the system. Voltage is present on most terminal connections when power is on.
2. Open the master switch before installing or removing a jumper on the subbase.
3. Before continuing to the next test, be sure to remove the test jumper(s) used in the previous tests.
4. Replace all limits and interlocks not operating properly. Do not bypass limits and interlocks.
5. Close all manual fuel shutoff valve(s) before starting these tests.

Equipment Recommended

1. Voltmeter (20K ohm/volt minimum sensitivity) set on the 0-30 Vdc scale.
2. Two jumper wires: No. 14 wire, insulated, 12 in. (305 mm) long, with insulated alligator clips at both ends.

General Instructions

1. Perform all applicable tests listed in Static Checkout, Table 5, in the order listed.
2. MAKE SURE THAT ALL MANUAL FUEL SHUTOFF VALVE(S) ARE CLOSED.
3. Perform only those tests designated for the specific RM7824A model being tested.
4. Raise the set point of the operating controller to simulate a call for heat.
5. For each test, open the master switch and install the jumper wire(s) between the subbase wiring terminals listed in the Test Jumpers column of Table 5.
6. Close the master switch before observing operation.
7. Read the voltage between the subbase wiring terminals listed in the Voltmeter column of Table 5.
8. If there is no voltage or the operation is abnormal, check the circuits and external devices as described in the last column.
9. Check all wiring for correct connections, tight terminal screws, correct wire, and proper wiring techniques. Replace all damaged or incorrectly sized wires.
10. Replace faulty controllers, limits, interlocks, actuators, valves, transformers, motors and other devices as required.
11. Obtain normal operation for each required test before continuing the checkout.
12. After completing each test, be sure to remove the test jumper(s).

Table 5. Static Checkout.

Test No.	RM7824A Models	Test Jumpers	Voltmeter	Normal Operation	If Operation is Abnormal, Check the Item Listed Below
⚠ **WARNING** **Fire or Explosion Hazard.** **Can cause severe injury, death or property damage.** Make sure all manual fuel shutoff valves are closed. ***IMPORTANT*** *Low fuel pressure limits, if used, could be open. Bypass them with jumpers for the remaining Static Tests (if required).*					
1	All	None	3-L2	24 Vdc at terminal 3	**1.** Master switch. **2.** Power connected to the master switch. **3.** Overload protection (fuse, circuit breaker) has not opened the power line.
2	All	None	6-L2	24 Vdc at terminal 6	**1.** Limits. **2.** Burner controller.
3	All	3-10	—	Ignition spark (if ignition transformer relay is connected to terminal 10.	**1.** Watch for spark or listen for buzz. a. Ignition electrodes are clean. b. Ignition transformer is okay..

Test No.	RM7824A Models	Test Jumpers	Voltmeter	Normal Operation	If Operation is Abnormal, Check the Item Listed Below
4	All	3-8	—	**1.** Ignition spark (if ignition transformer relay is connected to terminal 8. **2.** Automatic pilot valve opens (if connected to terminal 8). NOTE: Refer to wiring diagram of system being tested.	**1.** Watch for spark or listen for buzz. a. Ignition electrodes are clean. b. Ignition transformer is okay. **2.** Listen for click or feel head of valve for activation. a. Actuator if used. b. Pilot valve.
5	All	3-9	—	Automatic fuel vaive(s) open(s). If using direct spark ignition, check the first stage fuel valve(s) instead of the pilot valve.	Same as test no. 4. If using direct spark ignition, check the first stage fuel valve(s) instead of the pilot valve.
6	All	3-4	—	Alarm (if used) turns on.	**1.** Alarm.
Final	All	**CAUTION** **Equipment Damage Hazard.** **Failure to remove jumpers can damage equipment.** After completing these tests, open the master switch and remove all *test jumpers* from the subbase terminals. Also remove bypass jumpers from the low fuel pressure limits (if used).			

CHECKOUT

WARNING

Explosion or Fire Hazard.
Can cause severe injury, death or property damage.
Do not allow fuel to accumulate in the combustion chamber. If fuel is allowed to enter the chamber for longer than a few seconds without igniting, an explosive mixture could result. It is recommended that you limit the trial for pilot to ten seconds, and limit the attempt to light the main burner to two seconds from the time the fuel has reached the burner nozzle. In any case, do not exceed the nominal lightoff time specified by the equipment manufacturer. Close the manual shutoff valve(s) if the flame is not burning at the end of the specified time.

WARNING

Electrical Shock Hazard, Fire or Explosion Hazard.
Can cause severe injury, death or property damage.
1. Use extreme care while testing the system. Voltage is present on most terminal connections when power is on.
2. Open the master switch before removing or installing the RM7824A.
3. Make sure all manual fuel shutoff valve(s) are closed before starting the initial lightoff check and the Pilot Turndown tests.
4. Do not put the system in service until you have satisfactorily completed all applicable tests in this section and any others required by the equipment manufacturer.

CAUTION

Equipment Damage Hazard.
Improper replacement of relay module will cause equipment failure.
If an RM7824A is replaced with a lower or higher functioning 7800 SERIES Relay Module, the burner will not sequence unless wiring changes are made.

IMPORTANT

1. *If the system fails to perform properly, refer to 7800 SERIES System Annunciation Diagnostics and Troubleshooting, form 65-0118.*
2. *Repeat ALL required Checkout tests after all adjustments are made. ALL tests must be satisfied with the flame detector(s) in FINAL position.*

Equipment Required

Volt-ohmmeter (1M ohm/volt minimum sensitivity):

- 0-6000 ohm capability.
- 0-30 Vdc capability.

Checkout Summary

- Preliminary inspection—all installations.
- Flame signal measurement—all installations.
- Initial lightoff check for proved pilot—all installations using a pilot.
- Initial lightoff check for direct spark ignition of oil—all burners using DSI.
- Pilot turndown test—all installations using a pilot.
- Hot refractory hold-in test—all installations.
- Ignition spark pickup—all installations using Ultraviolet Flame Detectors.
- Response to other ultraviolet sources—all installations using Ultraviolet Flame Detectors.
- Flame signal with hot combustion chamber—all installations.
- Safety shutdown tests—all installations.

See Fig. 15 for location of component parts and see Fig. 7 or Q7800 Specifications for terminal locations.

Preliminary Inspection

Perform the following inspections to avoid common problems. Make certain that:

1. Wiring connections are correct and all terminal screws are tight.
2. Flame detector(s) is clean, installed and positioned properly. Consult the applicable instructions.
3. Correct combination of amplifier and flame detector(s) is used. See Table 2 in the Specifications section.
4. Plug-in amplifier is securely in place.
5. Burner is completely installed and ready to fire; consult equipment manufacturer instructions. Fuel lines are purged of air.
6. Combustion chamber and flues are clear of fuel and fuel vapor.
7. Power is connected to the system disconnect switch (master switch).
8. Lockout switch is reset (push in reset pushbutton) only if the RM7824A is powered. See Fig. 1 and 2.
9. 9.System is in the STANDBY condition. POWER LED is energized.
10. 10.All limits and interlocks are reset.

Table 6. Flame Signal (See Fig. 18).

Flame Detector	Flame Signal Amplifier	Minimum Acceptable Steady dc Voltage[a]	Maximum Expected dc Voltage
C7024E,F	R7824C[b]	1.25 Vdc	5.0 Vdc at the Keyboard Display Module or 5.0 Vdc at a 1M ohm/volt voltmeter.
C7015A	R7848A,B[c]		
C7915A	R7852A,B[c]		
C7927, C7962	R7851B[c]		
C7961	R7851C[c]		

[a] This minimum or a stronger signal should be easily obtained if the detector is correctly installed and positioned to properly sense the flame. This voltage must be obtained before completing checkout.

[b] The flame signal amplifier circuitry is tested one-half second every five seconds during burner operation and shuts down the burner if the amplifier fails (all installations).

[c] The amplifier is an AMPLI-CHECK™ type.

Flame Signal Measurement

Measure the flame signal at the appropriate times defined in the following checkout tests. Read the flame signal volts dc at the flame amplifier test jacks (+) and (-) (Com).

1. Use a 1M ohm per volt voltmeter with a 0 to 30 Vdc capability.
2. Set the voltmeter to the 0 to 10 Vdc range.
3. Insert the positive (red) probe into the (+) jack of the flame amplifier and the negative (black) probe into the
   (-) (Com) jack of the flame amplifier (see Fig. 17).
4. Allow a few seconds for the meter reading to stabilize.
5. When using a shutter check amplifier, read the average stable voltage, disregarding the peaks and valleys caused by the self-checking program.
6. The meter reading must be as specified in Table 6 after all tests are completed and all adjustments are made.

As an option, the flame signal can be checked by using the optional Keyboard Display Module.

If the signal is unstable or less than the minimum acceptable voltage, check the flame detector installation and circuitry.

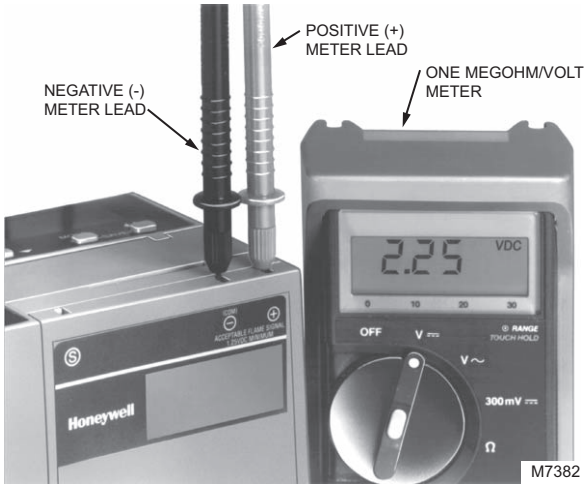

Fig. 14. Flame signal measurement.

1. Check the supply voltages at terminals 3 and L2 (N). Make sure the master switch is closed, connections are correct and the power supply voltage is correct.
2. Check the detector wiring for defects including:
   a. Deteriorated wire.
   b. Incorrect connections.
   c. Leakage paths caused by moisture, soot or accumulated dirt.
   d. Open circuits.
   e. Short circuits.
   f. Wrong wire type.
3. For all optical detectors, clean the detector viewing window and inside the sight pipe as applicable.
4. With the burner running, check the temperature at the detector. If it exceeds the detector maximum rated temperature:
   a. Add a heat block to stop conducted heat traveling up the sight pipe.
   b. Add a shield or screen to reflect radiated heat.
   c. Add cooling (refer to sight pipe ventilation in the detector instructions).
5. Make sure that the flame adjustment is not too lean.
6. Make sure that the detector is properly sighting the flame.
7. If necessary, resight or reposition the detector.

Initial Lightoff Check for Proved Pilot.

Perform this check on all installations that use a pilot. It should immediately follow the preliminary inspection.

NOTE: Low fuel pressure limits, if used, could be open. If so, bypass them with jumpers during this check.

1. Open the master switch.
2. Make sure that the manual main fuel shutoff valve(s) is closed. Open the manual pilot shutoff valve. If the pilot takeoff is downstream from the manual main fuel shutoff valve(s), slightly open the manual main valve to supply pilot gas flow. Make sure the main fuel is shut off just upstream from the burner inlet, or disconnect power from the automatic main fuel valve(s).
3. Close the master switch and start the system with a call for heat by raising the setpoint of the operating controller (see Fig. 13 or RM7824A sequence). The primary sequence should start the SAFE-START CHECK sequence.
4. Let the sequence advance through STANDBY and SAFE-START CHECK. Ignition spark should occur and the pilot should light. If the pilot ignites, the FLAME LED will be energized. Proceed to step 7.
5. If the pilot flame is not established in four or ten seconds, safety shutdown occurs. Let the sequence complete its cycle. Consult the equipment operating manual for further information.
6. Push the reset pushbutton and let the system recycle once. If the pilot still does not ignite, make the following ignition/pilot adjustments:
   a. Open the master switch and remove the RM7824A from the subbase.
   b. On the subbase, jumper terminal 3 to ignition terminal 8 or 10; refer to the appropriate subbase wiring diagram to determine the proper terminal. Disconnect the leadwire to the pilot valve if it is connected to the same terminal.
   c. Close the master switch to energize only the ignition transformer.
   d. If the ignition spark is not strong and continuous, open the master switch and adjust the ignition electrode spark gap setting to the manufacturer recommendation.
   e. Make sure the ignition electrodes are clean.
   f. Close the master switch and observe the spark.
   g. After a continuous spark is obtained, open the master switch and add a jumper on the subbase from terminal 3 to the pilot terminal 8. Reconnect the leadwire from the pilot valve if it was disconnected in step b.
   h. Close the master switch to energize both the ignition transformer and the pilot valve.
   i. If the pilot does not ignite and if the ignition spark is still continuous, adjust the pressure regulator until a pilot is established.
   j. When the pilot ignites properly and stays ignited, open the master switch and remove the jumper(s) from terminals 3 to 8 or 3 to 10 of the subbase.
   k. Check for adequate bleeding of the fuel line.
   l. Reinstall the RM7824A on the subbase and close the master switch.
   m. Return to step 4.
7. When the pilot ignites, measure the flame signal. If the pilot flame signal is unsteady or approaching the 1.25 Vdc minimum value, adjust the pilot flame size or detector sighting to provide a maximum and steady flame signal.
8. Recycle the system to recheck lightoff and pilot flame signal.
9. When the RUN period is displayed by the MAIN LED, make sure the automatic main fuel valve is open; then smoothly open the manual main fuel shutoff valve(s) and watch for main burner flame ignition. When the main burner flame is established, proceed to step 16.
10. If the main burner flame is not established within five seconds or the normal lightoff time specified by the equipment manufacturer, close the manual main fuel shutoff valve(s).

11. Recycle the system to recheck lightoff and pilot flame signal.
12. Let the RM7824A recycle to the RUN period. Smoothly open the manual fuel shutoff valve(s) and try lightoff again. (The first attempt may have been required to purge the lines and bring sufficient fuel to the burner.)
13. If the main burner flame is not established within five seconds or the normal lightoff time specified by the equipment manufacturer, close the manual main fuel shutoff valve(s). Check all burner adjustments.
14. If the main burner flame is not established after two attempts:
   a. Check for improper pilot size.
   b. Check for excess combustion air.
   c. Check for inadequate fuel flow.
   d. Check for proper gas supply pressure.
   e. Check for proper valve operation.
   f. Check for proper pilot flame positioning.
15. Repeat steps 10 through 14 to establish the main burner flame, then proceed to step 16.
16. With the sequence in RUN, make burner adjustments for flame stability and Btu input rating.
17. Shut down the system by opening the burner switch or by lowering the setpoint of the operating controller. Make sure the main flame goes out. There may be a delay due to gas trapped between the valve(s) and the burner. Make sure the automatic fuel valve(s) closes.
18. Restart the system by closing the burner switch and/or raising the setpoint of the operating controller. Observe that the pilot is established during PILOT IGNITION and the main burner flame is established during RUN within the normal lightoff time.
19. Measure the flame signal. Continue to check for the proper signal, see Table 6, through the RUN period.
20. Run the burner through another sequence, observing the flame signal for:
   a. Pilot flame alone (unless using direct spark ignition).
   b. Pilot and main flame together.
   c. Main flame alone (unless monitoring an intermittent pilot).

Also observe the time it takes to light the main flame. Ignition of the main flame should be smooth.

21. Return the system to normal operation.
22. Make sure all readings are in the required ranges before proceeding.

NOTE: Upon completing these tests, open the master switch and remove all test jumpers from the subbase terminals, limits/controls or switches.

Initial Lightoff Check for Direct Spark Ignition

This check applies for gas and oil burners that do not use a pilot and it should immediately follow the preliminary inspection. Refer to the appropriate sample block diagram of field wiring for the ignition transformer and fuel valve(s) hookup.

NOTE: Low pressure fuel limits, if used, could be open. If so, bypass them with jumpers during this check.

1. Open the master switch.
2. Complete the normal checkout of the fuel supply and equipment as recommended by the equipment manufacturer.
3. Close all manual main fuel shutoff valve(s). Check that the automatic fuel valve(s) are closed. Make sure fuel is not entering the combustion chamber.
4. Close the master switch and start the system with a call for heat by raising the setpoint of the operating controller see Fig. 12 or RM7824A sequencing. The primary sequence should start with the SAFE-START sequence.
5. Let the sequence advance through STANDBY and SAFE-START CHECK to Ignition Trial. Ignition spark should occur. Listen for the click of the first stage fuel solenoid valve(s).
6. Let the program sequence complete its cycle.
7. Open the manual fuel shutoff valve(s).
8. Push the reset pushbutton and recycle the program sequence through STANDBY and SAFE-START CHECK.
9. Watch for the FLAME LED to help determine when the first stage burner flame is established. If it is established, proceed to step 15.
10. If the first stage burner flame is not established within four seconds, or within the normal lightoff time specified by the equipment manufacturer, close the manual fuel shutoff valve(s) and open the master switch.
11. Check all burner adjustments.
12. Wait about three minutes. Close the master switch, open the manual fuel shutoff valve(s), and try again to light off the burner. The first attempt may have been required to purge the lines and bring sufficient fuel to the burner. 11.Check all burner adjustments.
13. If the first stage burner flame is not established within four seconds, or within the normal lightoff time specified by the equipment manufacturer, close the manual fuel shutoff valve(s) and open the master switch.
14. If necessary, repeat steps 11 through 13 to establish the first stage burner flame, then proceed to step 15.

15. When the first stage burner flame is established, the sequence will advance to RUN. Make burner adjustments for flame stability and input rating. If a second stage is used, proceed to step 18.
16. Shut down the system by opening the burner switch or by lowering the setpoint of the operating controller. Make sure the burner flame goes out and make sure all automatic fuel valve(s) close.
17. If used, remove the bypass jumpers from the low fuel pressure limit and subbase.
18. If a second stage is used, make sure the automatic second stage fuel valve(s) has opened, check the lightoff as follows. Otherwise, proceed to step 19:
   a. Open the manual second stage fuel valve(s).
   b. Restart the system by raising the setpoint of the operating controller.
   c. When the first stage burner flame is established, watch for the automatic second stage fuel valve(s) to open. Observe that the second stage lights off properly.
   d. Make burner adjustments for flame stability and input rating.

e. Shut down the system by lowering the setpoint of the operating controller. Make sure the burner flame goes out and all automatic fuel valve(s) close.

19. Restart the system by closing the burner switch and/or raising the setpoint of the operating controller. Observe that the burner flame is established during PILOT IGNITION, within the normal lightoff time specified by the equipment manufacturer.

20. Measure the flame signal. Continue to check for the proper signal, see Table 6, through the RUN period. Any pulsating or unsteady readings will require further attention.

21. Make sure all readings are within the required ranges before proceeding.

NOTE: Upon completing these tests, open the master switch and remove all test jumpers from the subbase terminals, limits/controls or switches.

22. Return the system to normal operation.

Pilot Turndown Test (All Installations Using a Pilot)

Perform this check on all installations that use a pilot. The purpose of this test is to verify that the main burner can be lit by the smallest pilot flame that will hold in the flame amplifier and energize the FLAME LED. Clean the flame detector(s) to make sure that it will detect the smallest acceptable pilot flame. When using Self-checking Amplifier and 1M ohm/volt voltmeter, the flame signal will fluctuate every time the amplifier does a self-check or a shutter check.

NOTE: Low fuel pressure limits, if used, could be open. If so, bypass them with jumpers during this test.

1. Open the master switch.

2. Close the main fuel shutoff valve(s).

3. Connect a manometer (or pressure gauge) to measure pilot gas pressure during the turndown test.

4. Open the manual pilot shutoff valve(s).

5. Close the master switch and start the system with a call for heat by raising the setpoint of the operating controller. The primary sequence should start and PILOT IGNITION should begin.

6. After the sequence has entered the normal burner run period, very slowly turn the pilot gas pressure down, reading the manometer (or pressure gauge) as the pressure drops. Stop immediately when the FLAME LED goes out. Note the pressure at this point.

NOTE: If there is not flame present for the selected Flame Failure Response Test (FFRT), the RM7824A will lock out.

a. Push the reset pushbutton and allow the RM7824A to recycle to PILOT IGNITION.

b. As the control attempts to relight the pilot, increase the pilot pressure immediately until the FLAME LED comes on, and then slowly turn it down to obtain a pressure reading just above the dropout point or until the flame signal increases to approximately 1.25 Vdc. This step must be completed within four or ten seconds, depending on the selected PFEP, or lockout will occur.

c. Turn the pilot back down slightly but not enough to cause the FLAME LED to go out. (Keep the pilot gas pressure just above the reading noted in step 6 above.)

NOTE: Step d requires two people to complete, one person to open the manual main fuel valve(s) and one to watch for ignition.

d. With the sequence in the normal burner run mode, make sure that the automatic main fuel valve(s) is open. Smoothly open the manual main fuel shutoff valve(s) and watch for main burner lightoff.

e. If the main flame is not established within five seconds or the normal lightoff period specified by the burner manufacturer, close the manual main fuel shutoff valve(s) and open the master switch. Then return to step 6.a. If the burner flame is established in the normal lightoff period, proceed to step 10.

7. Recycle the burner and let the sequence advance to the PILOT IGNITION period.

8. Increase the pilot flame size by increasing its fuel flow until a smooth main flame is accomplished.

9. Reposition the flame scanner sight tube or use orifices until the pilot flame signal voltage is approximately 1.25 to 1.50 Vdc.

10. When the main burner lights reliably with the pilot at turndown, disconnect the manometer (or pressure gauge) and turn the pilot gas flow up to that recommended by the equipment manufacturer.

11. If used, remove the bypass jumpers from the subbase terminals, limits/control or switches.

12. Run the system through another cycle to check for normal operation.

13. Return the system to normal operation.

Ultraviolet Sensor, Ignition Spark Response Test (All Ultraviolet Detectors)

Test to be sure that the ignition spark is not actuating the FLAME LED:

1. Close the pilot and main burner manual fuel shutoff valve(s).

2. Start the burner and run through the PILOT IGNITION period. Ignition spark should occur, but the flame signal should not be more than 0.5 Vdc and the FLAME LED should not turn on.

3. If the flame signal is higher than 0.5 Vdc and the FLAME LED does come on, consult the equipment Operating Manual and resight the detector further out from the spark, or away from possible reflection. If may be necessary to construct a barrier to block the ignition spark from the detector view. Continue adjustments until the flame signal due to ignition spark is less than 0.5 Vdc.

Response to Other Ultraviolet Sources

Under certain conditions, an ultraviolet detector will respond to other ultraviolet sources as if it is sensing a flame. These ultraviolet sources include artificial light, such as incandescent or fluorescent bulbs, mercury and sodium vapor lamps or daylight. To check for proper detector operation, check the Flame Failure Response Time (FFRT) and conduct Safety Shutdown tests under all operating conditions.

Flame Signal with Hot Combustion Chambers (All Installations)

After all initial start-up tests and burner adjustments are completed, operate the burner until the combustion chamber is at the maximum expected temperature. Observe the equipment manufacturer warm-up instructions. Recycle the burner under these hot conditions and measure the flame signal. Check the pilot alone for non-DSI applications or the main burner flame for DSI applications.

Check the FFRT of the Flame Amplifier. Lower the setpoint of the operating controller and observe the time it takes for the burner flame to go out. This should be within three seconds maximum.

If the flame signal is too low or unsteady, check the flame detector temperature. Relocate the detector if the temperature is too high. If necessary, realign the sighting to obtain the proper signal and response time. Then if the response time continues to be too slow, replace the Plug-in Flame Signal Amplifier.

Safety Shutdown Tests (All Installations)

Perform these tests at the end of Checkout section after all other tests have been completed. If used, the external alarm should turn on. Press the RM7824A reset pushbutton to restart the system.

1. Detect flame 40 seconds after entry to STANDBY.
   a. Simulate a flame to cause the flame signal voltage level to be at least 1.25 Vdc for 30 sec-onds after the initial 40 second entry into STANDBY.
   b. Safety shutdown will occur.
2. Failure to ignite pilot.
   a. Close the pilot and main fuel manual shutoff valve(s).
   b. Depress the reset pushbutton.
   c. Start the system.
   d. Automatic pilot valve(s) should be energized but the pilot cannot ignite.
   e. Safety shutdown will occur.
3. Loss of flame during RUN.
   a. Open the main fuel manual shutoff valve(s). The manual pilot shutoff valve(s) must also be opened.
   b. Depress the reset pushbutton.
   c. Start the system. Startup should be normal and the main burner should light normally.
   d. After the sequence is in the normal RUN period for at least ten seconds with the main burner firing, close the manual main and pilot fuel shutoff valve(s) to extinguish the main burner flame.
   e. The flame signal should drop below 1.25 Vdc within three seconds after the main flame goes out.
   f. Safety shutdown will occur.

IMPORTANT

1. *1.If the RM7824A fails to shut down on any of these tests, take corrective action (refer to Troubleshooting, RM7824A diagnostics and return to the beginning of all Checkout tests).*
2. *2.When all Checkout tests have been completed, reset all switches to original states.*

TROUBLESHOOTING

RM7824A System Diagnostics

Troubleshooting control system equipment failures is easier with the RM7824A self-diagnostics and first-out annunciation. In addition to an isolated spst alarm relay (audible annunciation), the RM7824A provides visual annunciation by displaying the ALARM LED.

Self-diagnostics of the RM7824A enable it to detect and annunciate both external and internal system problems. External faults such as flame failures and false flame signals are annunciated by a lockout of the RM7824A that energizes the ALARM LEDs by using the optional Keyboard Display Module or 7800 SERIES System Annunciation Diagnostics and Troubleshooting, form 65-0118.

The RM7824A provides diagnostic information to aid the service mechanic to obtain information when troubleshooting the system; see Table 7 and Table 8.

The optional Keyboard Display Module displays sequence status messages indicating: INITIATE, STANDBY, SAFE-START CHECK, PILOT IGN and RUN. The selectable messages also provide visual indication, current status and historical status of the equipment such as: Flame Signal, Total Cycles, Total Hours, Fault History and Diagnostic Information. The Expanded Annunciator Terminal Status is not available with the RM7824A. With this information, most problems can be diagnosed without extensive trial and error testing. Information available in the Diagnostic Information file includes: Device Type, Device Suffix, Software Revision, Manufacturing Code, Flame Amplifier Type, Flame Failure Response Time, Selectable Jumper Configuration Status and Terminal Status.

Diagnostic Information Index

The RM7824A with the optional Keyboard Display Module can monitor input/output terminals and can display the status of the terminal at the VFD (e.g., Pilot Valve T9 ON<), see S7800A Keyboard Display Module Specifications. A complete terminal description and terminal number are provided. The display will show the actual status of the

terminal. If voltage is detected at the terminal, ON is displayed; but if voltage is not present at the terminal, OFF is displayed.

Historical Information

The RM7824A has nonvolatile memory that allows the Relay Module to retain historical information for the six most recent lockouts. Each of the six lockout files retains the cycle when the fault occurred, the hour of operation when the fault occurred and the fault message and burner status when the fault occurred. The historical information can be viewed by the optional S7800A Keyboard Display Module.

SERVICE NOTE: To check voltages, remove the access slot covers on the sides of the Q7800A,B.

⚠ WARNING

Electrical Shock Hazard.
Can cause severe injury, death or property damage.
To prevent accidental electrical shock or equipment damage, reinstall access slot covers on the the Q7800A,B Wiring Subbase after performing voltage checks.

Table 7. Sequence And Status Hold Information.

NOTE: Normal sequences are in bold type, while abnormal sequences are in standard type.

Sequence	Information
INITIATE	The LED indicates the burner status, POWER, which is a stabilization period for the RM7824A to check for any fluctuations in dc voltage inputs or control input on power-up or during normal operation.
If the RM7824A is in a HOLD status, the following conditions could exist:	
INITIATE HOLD (Vdc Frequency/noise)	The LED indicates the burner status, POWER, and that the RM7824A is waiting for excess line noise to clear up. The burner sequence will not advance into STANDBY until the excess line noise, which prevents sufficient read of the voltage input, ceases.
INITIATE HOLD (AC LIne Dropout)	The LED indicates the burner status, POWER, and that DC Bus power has momentarily dropped out. The burner sequence will not advance into STANDBY until the DC Bus voltage has stabilized throughout the INITIATE sequence.
INITIATE HOLD (AC Frequency)	The LED indicates the burner status, POWER, and that the internal timing functions are out of synchronization. The burner sequence will not advance into STANDBY until the internal timing is synchronized.
INITIATE HOLD (Low Line Voltage)	The LED indicates the burner status, POWER, and that low DC Bus voltage has occurred. The burner sequence will not advance into STANDBY until the DC Bus voltage is at a sufficient level for proper operating parameters.
STANDBY	The LED indicates the burner status, POWER. The burner can be placed in STANDBY by opening the burner switch or if the operating controller indicates its setpoint has been satisfied. If a demand is present for burner operation, the burner sequence will not advance from STANDBY to SAFE START CHECK until the recycle limits close.
STANDBY HOLD: F/G (Flame Detected)	The LEDs indicate the burner status, POWER and FLAME, and that a flame is detected. A demand is present for burner operation. The burner sequence will not advance to SAFE START CHECK because a flame is detected as being present. The sequence will not advance to SAFE START CHECK until the flame signal clears. If the flame signal does not clear within 40 seconds, the RM7824A will lockout.
SAFE START CHECK	The LED indicates the burner status, POWER, which is the period of time after STANDBY. The RM7824A is verifying that a flame is not present before the start of Ignition Trials. If a flame is present, the RM7824A will recycle to STANDBY.
PILOT IGN	The LEDs indicate the burner status, POWER, PILOT and FLAME, which is the period of time the RM7824Apermits the pilot valve and ignition to be energized and the pilot flame to be established.
RUN	The LEDs indicate the burner status, POWER, PILOT, FLAME and MAIN, which is the period of time after the Ignition Trials and before the operating controller setpoint is reached. During this time, the burner is firing under the control of the operating controller.
RESET/ALARM TEST	The LEDs indicate the burner status, POWER and ALARM. This condition indicates that the reset pushbutton is pressed. If it is held for more than four seconds, the alarm output is energized. The alarm output will be de-energized after the reset pushbutton is released.

Table 8. Hold And Fault Message Summary.

Fault Number	Annunciation Message
Fault 2	*AC Frequen/Noise*
Fault 3	*AC Line Dropout*
Fault 4	*AC Frequency*
Fault 5	*Low Line Voltage*
Fault 7	*Flame Amplifier*
Fault 8	*Flame Amp/Shutr*
Fault 9	*Flame Detected*
Fault 17	*Main Flame Fail*
Fault 19	*Main Flame Ign.*
Fault 24	*Call Service*
Fault 25	*Call Service*
Fault 28	*Pilot Flame Fail*
Fault 35-40	*Call Service*
Fault 41	*Main Valve On*
Fault 43	*Ignition On*
Fault 46	*Flame Amp Type*
Fault 47	*Jumpers Changed*
Fault 51	*Flame Too Strong*
Fault 52-70	*Call Service*
Fault 71-75	*Device Specific*
Fault 76-93	*Accessory Fault*
Fault 94-108	*Call Service*
Fault 110-111	*Call Service*
Fault 118-119	*Call Service*
Fault 123	*Call Service*
Fault 125-127	*Call Service*

SAFETY AND SECURITY

Physical device protection

Device shall be accessible to authorized personnel only – Installation on publicly accessible places is not recommended as this could lead to unwanted and potentially unsafe changes to device (wiring, configuration, etc).

It is recommended to lock the device in an enclosed cabinet with access allowed only to approved and trained personnel. Also, it is strongly advised to keep all the wiring of device physically secure.

Physical protection of the device is applied via Run/Test switch label/seal. It is intended to prevent and detect unauthorized access.

Modbus & DDL Interface security

Any conducts critical to device functionality (DDL, Modbus lines etc.) shall be physically protected (installed outside public access) since they could be damaged or tampered-with by unauthorized people, either accidentally or for purpose.

Modbus RS-485 & DDL protocols do not support security features. For DDL interface - only DDL devices shall be connected to the Burner Controller DDL line.

License agreement

Copying and reverse engineering is prohibited by the law.

ПРОМЭЛЕКТРОНИКА / sales@prom-elec.com

For More Information

The Honeywell Thermal Solutions family of products includes Honeywell Combustion Safety, Eclipse, Exothermics, Hauck, Kromschröder and Maxon. To learn more about our products, visit ThermalSolutions.honeywell.com or contact your Honeywell Sales Engineer.

Honeywell Process Solutions

Honeywell Thermal Solutions (HTS)
1250 West Sam Houston Parkway
South Houston, TX 77042
ThermalSolutions.honeywell

® U.S. Registered Trademark
© 2019 Honeywell International Inc.
32-00229—01 M.S. 09-19
Printed in United States

Honeywell