SIEMENS

7156



Burner controls

LME75...
LME76...

The LME75/LME76 is a microprocessor-based burner control with matching system components for controlling and supervision of forced draft burners of medium to large capacity.

The LME75/LME76 and this data sheet are intended for original equipment manufacturers (OEMs) using the LME75/LME76 in or on their products.

Notes

Caution!
All the safety, warning, and technical notes given in the basic documentation for the LME75/LME76 (P7156) also apply to this document. Failure to observe these poses a risk of damaging the safety functions and the risk of electric shock.

Software version V03.00

CC1N7156en
18.01.2024

Smart Infrastructure

ПРОМЭЛЕКТРОНИКА / sales@prom-elec.com

Use

The LME75/LME76 is responsible for commissioning and supervising 1-stage or 2-stage forced draft burners or forced draft burners with pneumatic/mechanical ratio control modulation in continuous operation.

Depending on the LME75/LME76, flame supervision takes place during continuous operation with the following detectors or alarms:

Continuous operation

LME75	LME76	
●	---	QRA7 UV flame detector
●	---	QRI infrared flame detector
●	●	Ionization probe
---	●	LFS1 flame safeguard with RAR9 photocell detector or ionization probe

Intermittent operation

LME75	LME76	
---	●	LFS1 flame safeguard with QRA2/QRA4/QRA10 UV flame detector
---	●	LFS1 flame safeguard with QRA2/QRA4/QRA10 UV flame detector and ionization probe

- Applications in accordance with EN 267: Forced draft burner for liquid fuels
- Applications in accordance with EN 676: Forced draft burner for gaseous fuels
- Applications in accordance with EN 746-2: Industrial thermoprocessing equipment – Part 2: Safety requirements for combustion and fuel handling systems
- Type-tested and approved in accordance with DIN EN 298

Features

- Undervoltage detection
- Electrical remote lockout reset facility
- Accurate control sequence thanks to digital signal handling
- Multicolor indication of fault status and operational status messages
- Air pressure supervision with function check of air pressure switch during start and operation (depending on the PME75/PME76 program module and respective parameterization)
- Limitation of restarts
- Parameterizable, controlled intermittent operation after a maximum of 24 hours of continuous operation (parameter 239 = 1) – e.g., for applications involving an LFS1 flame safeguard and its QRA2 / QRA4 / QRA10 UV flame detector
- Continuous operation (parameter 239 = 0)
- BC interface
- The parameters for the LME75/LME76 can be set via the AZL2 display and operating unit or the ACS410 PC software
- Plug-in space for the PME75/PME76 program module

The following items are integrated into the LME75/LME76:

- Burner control
- BC interface for connecting an AZL2 display and operating unit or an OCI460 cloud gateway
- Lockout reset button (info button)
- 3-multi color signal lamp (LED) for operating status and fault status messages (lockout reset button (info button) and 3 additional buttons for operation in conjunction with 3 x 7-segment display)
- Analog inputs for load controller DC 0...10 V, DC 0/4...20 mA, 0...135 Ω
- Interface for PME75/PME76 program module
- 3 x 7-segment display for service, fault and status information
- Control for one actuator
- Control for a PWM fan motor (depending on the PME75/PME76 program module and respective parameterization)

Supplementary documentation

Product type	Designation	Documentation type	Documentation number
PME75.231Ax	Program module	User Documentation	A7156.7
PME75.811Ax	Program module	User Documentation	A7156.1
PME75.812Ax	Program module	User Documentation	A7156.3
PME75.831Ax	Program module	User Documentation	A7156.4
PME76.231Ax	Program module	User Documentation	A7156.8
PME76.811Ax	Program module	User Documentation	A7156.2
PME76.812Ax	Program module	User Documentation	A7156.6
PME76.831Ax	Program module	User Documentation	A7156.5
LME	Burner control	Environmental declaration	E7105 *)
LME75/LME76	Burner control	Product range overview	Q7105
LME75 / LME76	Burner control	Basic documentation	P7156
PME	Program module	Environmental declaration	E7105.1 *)

*) On request only

Applied directives:

- Low Voltage Directive 2014/35/EU
- Pressure Equipment Directive 2014/68/EU
- Gas Appliances Regulation (EU) 2016/426
- Electromagnetic Compatibility EMC (immunity) *) 2014/30/EU

*) The compliance with EMC emission requirements must be checked after the burner control is installed in the equipment

Compliance with the regulations of the applied directives is verified by the adherence to the following standards / regulations:

- Automatic burner control systems for burners and appliances burning gaseous or liquid fuels — DIN EN 298
- Safety and control devices for gas burners and gas-burning appliances – Valve proving systems for automatic shutoff valves — DIN EN 1643
- Safety and control devices for burners and appliances burning gaseous and/or liquid fuels — DIN EN 13611
- Automatic electrical controls for household and similar use Parts 2–5: Particular requirements on automatic electrical burner control and monitoring systems — DIN EN 60730-2-5

The edition of the standards that applies in each case can be found in the declaration of conformity.

Note on **DIN EN 60335-2-102**!
Household and similar electrical appliances – Safety
Part 2-102:
Particular requirements for gas, oil and solid-fuel burning appliances having electrical connections. The electrical connections of the LME75/LME76 comply with the requirements of DIN EN 60730-2-5.

EAC Conformity (Eurasian Conformity)

UKCA conformity mark (UK compliance)

China RoHS
Hazardous substances table:
http://www.siemens.com/download?A6V10883536

120 V AC versions only

SIL3 classification to DIN EN 13611



Suitable for use in safety-related, industrial applications up to safety level SIL3 (safety integrity level 3).

The following parameters apply:

Burner control	Flame detector / Flame safeguard	Operating mode	SIL level	PFHD [1/h]	SFF
LME75	Ionization probe	Continuous operation	SIL3	$3.0 \cdot 10^{-8}$	97%
LME75	Ionization probe and QRI	Continuous operation	SIL3	$3.1 \cdot 10^{-8}$	97%
LME75	Ionization probe and QRA7	Continuous operation	SIL3	$4.0 \cdot 10^{-8}$	99%
LME76	Ionization probe	Continuous operation	SIL3	$3.0 \cdot 10^{-8}$	97%
LME76	LFS1.11Ax with RAR9	Continuous operation	SIL3	$4.3 \cdot 10^{-8}$	97%
LME76	LFS1.21Ax with ionization probe	Continuous operation	SIL3	$4.3 \cdot 10^{-8}$	97%

⚠ Caution!
Only permitted in intermittent operation (where continuous operation is <24 hours)
Parameter 239 = 1 and parameter 218 = 80050.31 seconds
or with external control via heat request of no more than 24 hours.

LME76	LFS1.21Ax with QRA2 / QRA4 / QRA10	Intermittent (<24 hours)	SIL2	$2{,}5 \cdot 10^{-7}$	99%
LME76	LFS1.21Ax with ionization probe and QRA2 / QRA4 / QRA10	Intermittent (<24 hours)	SIL2	$2.5 \cdot 10^{-7}$	99%

⚠ Caution!
Only permitted with a maximum operating duration in intermittent mode (<1 hour of continuous operation)
Parameter 239 = 1 and parameter 218 = 3589.7 seconds
or with external control via heat request of no more than 1 hour.

LME76	LFS1.21Ax flame safeguard with QRA2 / QRA4 / QRA10 UV flame detector	Maximum operating duration in intermittent mode (<1 hour)	SIL3	$6.3*10^{-8}$	99%

Lifetime

The LME75/LME76 has a designed lifetime* of 250,000 burner startup cycles which, under normal operating conditions in heating mode, corresponds to approx. 10 years of usage (starting from the date of manufacture on the nameplate). This lifetime is based on the endurance tests specified in standard EN 298.
A summary of the conditions has been published by the European Control Manufacturers Association (Afecor) (www.afecor.org).

The designed lifetime is based on use of the LME75/LME76 according to the manufacturer's data sheet and the basic documentation. After reaching the designed lifetime in terms of the number of burner startup cycles, or after the corresponding usage time, the LME75/LME76 must be replaced by authorized personnel.

* The designed lifetime is not the warranty time specified in the Terms of Delivery.

System overview

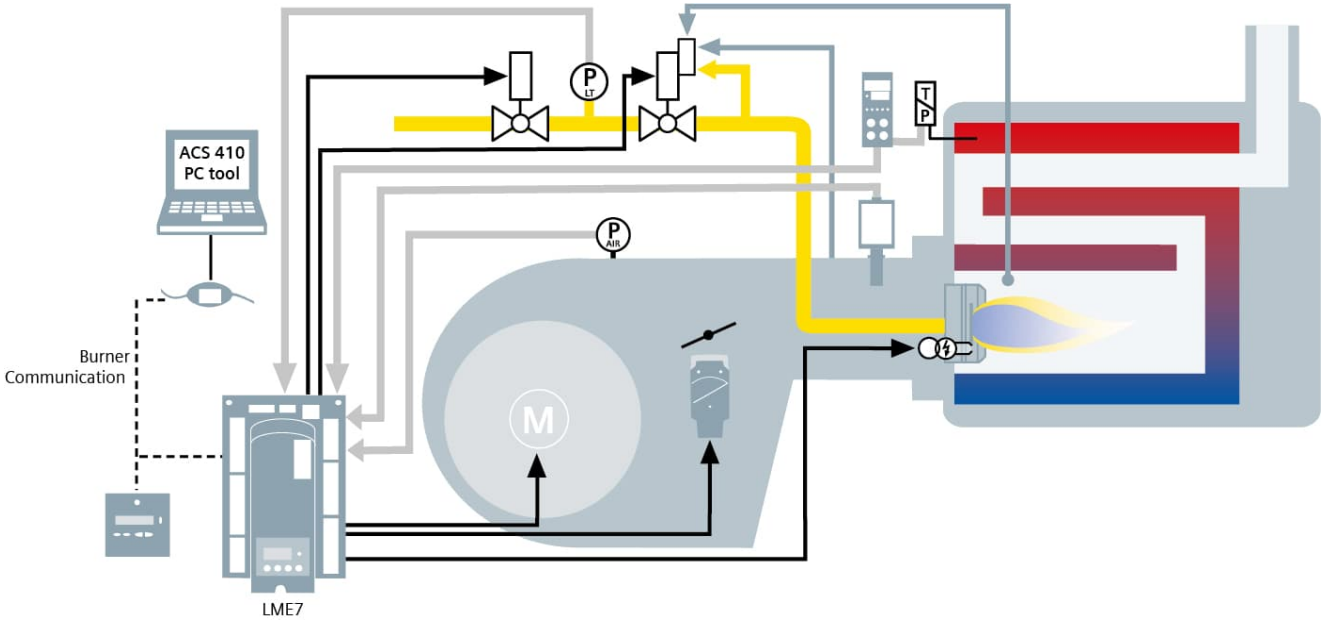

The diagram shows the full scope of functions of the LME75/LME76. The actual functions are to be determined based on the respective execution or configuration.

The system components of the LME75/LME76 are connected directly to the LME75/LME76. All safety-related digital inputs and outputs of the system are monitored by a contact feedback network. For continuous operation, the ionization probe, QRA7, QRI, or LFS1 flame detector (including its flame detector RAR9 or ionization probe) can be used in conjunction with the LME75/LME76. The LME75/LME76 is operated and parameterized via the AZL2 or ACS410. The AZL2 features an LCD and menu-driven operation, offering straightforward operation and targeted diagnostics. When making diagnostics, the display shows operating states and the type of error. Passwords protect the different parameter levels of the burner/boiler manufacturer and heating engineer against unauthorized access. Simple settings that the plant operator can make on site do not require a password.

Type summary

Burner control



LME75/LME76
Parameterized LME75/LME76 for the supervision of multistage or modulating forced draft oil/gas burners and atmospheric burners of medium to large capacity in continuous operation. With controlled air damper control. See Basic Documentation P7156.

Article no.	S55333-B201-A100	S55333-B203-A100	S55333-B202-A100	S55333-B204-A100
Type	LME75.000A1	LME76.000A1	LME75.000A2	LME76.000A2
Mains voltage 120 V AC	●	●	---	---
Mains voltage 230 V AC	---	---	●	●
Pressure switch-min / pressure switch-max or POC → Depending on the PME75/PME76 and respective parameterization	●	●	●	●
Pressure switch valve proving → Depending on the PME75/PME76 and respective parameterization	●	●	●	●
Air pressure switch	●	●	●	●
Ionization probe	●	●	●	●
QRA7	●	---	●	---
QRI	●	---	●	---
LFS1	---	●	---	●
Load controller analog input signal (0...10 V, 4...20 mA, 0...135 Ω)	●	●	●	●
Load controller input, 3-position step modulation or 2-stage	●	●	●	●
Actuator control output	●	●	●	●
Input 0...1 kΩ of the feedback from an actuator with ASZ	●	●	●	●
Output PWM fan motor (on request)	●	●	●	●
Onboard LED 7-segment display	●	●	●	●
BC interface for AZL2 and OCI410 with ACS410	●	●	●	●
Continuous operation (intermittent mode parameterized)	●	●	●	●

Accessories (must be ordered separately)

Program module

PME75/PME76
PME75/PME76 for the LME75/LME76, with oil or gas burner program sequences for the LME75/LME76. Refer to basic documentation for P7156.

Example:



PME75/PME76 with 120 V AC mains voltage

Article no.	S55333-B301-A100	S55333-B303-A100	S55333-B305-A100	S55333-B307-A100	S55333-B309-A100	S55333-B311-A100	S55333-B313-A100	S55333-B315-A100
Type	PME75.231A1	PME75.811A1	PME75.812A1	PME75.831A1	PME76.231A1	PME76.811A1	PME76.812A1	PME76.831A1
Mains voltage 120 V AC	●	●	●	●	●	●	●	●
For use with LME75.000A1	●	●	●	●	---	---	---	---
For use with LME76.000A1	---	---	---	---	●	●	●	●
Forced draft burner gas program	---	●	●	●	---	●	●	●
Atmospheric burner gas program	---	●	●	●	---	●	●	●
Forced draft oil burner	●	---	---	●	●	---	---	●
1-stage or 1-stage modulating	---	●	●	●	---	●	●	●
2-stage or 1-stage modulating	●	●	●	●	●	●	●	●
Simultaneous pilot burners	---	●	●	---	---	●	●	---
Alternating pilot burners	●	●	●	●	●	●	●	●
Modulating via actuator (pneumatic or mechanical fuel-air ratio control)	●	●	●	●	●	●	●	●
Actuator control via analog signal or 3-position step modulation input for actuators with ASZ → depending on the parameterization	●	●	●	●	●	●	●	●
3-position step modulation input for actuators without ASZ	●	●	●	●	●	●	●	●
Control sequence programmable time	●	●	●	●	●	●	●	●
POC → depending on the parameterization	●	●	●	---	●	●	●	---
Leakage control →depending on the parameterization	---	●	---	●	---	●	---	●
Valve proving input ON/OFF (via external switch) → depending on the parameterization	---	---	---	●	---	---	---	●
Gas pressure switch-max → depending on the parameterization	---	●	●	●	---	●	●	●
Oil pressure switch-min / oil pressure switch-max → depending on the parameterization	●	---	---	---	●	---	---	---
Oil preheater / oil temperature limiter → depending on the parameterization	●	---	---	---	●	---	---	---

Program module

PME75/PME76
PME75/PME76 for the LME75/LME76, with oil or gas burner program sequences for the LME75/LME76. Refer to basic documentation for P7156.

Example:



PME75/PME76 with 230 V AC mains voltage

Article no.	S55333-B302-A100	S55333-B304-A100	S55333-B306-A100	S55333-B308-A100	S55333-B310-A100	S55333-B312-A100	S55333-B314-A100	S55333-B316-A100
Type	PME75.231A2	PME75.811A2	PME75.812A2	PME75.831A2	PME76.231A2	PME76.811A2	PME76.812A2	PME76.831A2
Mains voltage 230 V AC	●	●	●	●	●	●	●	●
For use with LME75.000A2	●	●	●	●	---	---	---	---
For use with LME76.000A2	---	---	---	---	●	●	●	●
Forced draft burner gas program	---	●	●	●	---	●	●	●
Atmospheric burner gas program	---	●	●	●	---	●	●	●
Forced draft oil burner	●	---	---	●	●	---	---	●
1-stage or 1-stage modulating	---	●	●	●	---	●	●	●
2-stage or 1-stage modulating	●	●	●	●	●	●	●	●
Simultaneous pilot burners	---	●	●	---	---	●	●	---
Alternating pilot burners	●	●	●	●	●	●	●	●
Modulating via actuator (pneumatic or mechanical fuel-air ratio control)	●	●	●	●	●	●	●	●
Actuator control via analog signal or 3-position step modulation input for actuators with ASZ → depending on the parameterization	●	●	●	●	●	●	●	●
3-position step modulation input for actuators without ASZ	●	●	●	●	●	●	●	●
Control sequence programmable time	●	●	●	●	●	●	●	●
POC → depending on the parameterization	●	●	●	---	●	●	●	---
Leakage control →depending on the parameterization	---	●	---	●	---	●	---	●
Valve proving input ON/OFF (via external switch) → depending on the parameterization	---	---	---	●	---	---	---	●
Gas pressure switch-max → depending on the parameterization	---	●	●	●	---	●	●	●
Oil pressure switch-min / oil pressure switch-max → depending on the parameterization	●	---	---	---	●	---	---	---
Oil preheater / oil temperature limiter → depending on the parameterization	●	---	---	---	●	---	---	---

Display units / operating units and accessories

Article no.	Type		
BPZ:AZL21.00A9	**AZL21.00A9**	Display and operating unit • Separate unit for a choice of mounting methods with LCD • 8 digits • 5 buttons • BC interface for LME75/LME76 • Protection type IP40 Refer to data sheet N7542	
BPZ:AZL23.00A9	**AZL23.00A9**	Display and operating unit • Separate unit for a choice of mounting methods with LCD • 8 digits • 5 buttons • BC interface for LME75/LME76 • Protection type IP54 Refer to data sheet N7542	
---	**---**	3-color LED • Installed in LME75/LME76 • Lockout reset button (info button) • 3 other buttons for operation in connection with 3 x 7-segment display	
BPZ:AGV50.100	**AGV50.100**	Signal cable for AZL2 • With RJ11 plug • Cable length 1 m • Packs of 10 pieces Every AZL2 must come complete with a cable to connect it to the LME75/LME76.	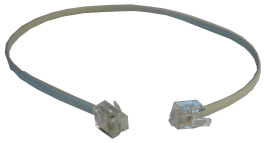

LFS1 flame safeguard

Note!
Depending on the flame safeguard used.

LME76 only
External flame safeguard with approval for continuous operation for the supervision of oil and gas flames.
Refer to data sheet N7782.

Article no.	Type	Flame detector	Operating mode	
BPZ:LFS1.11A1 **BPZ:LFS1.11A2**	**LFS1.11A1** **LFS1.11A2**	RAR9	Continuous operation	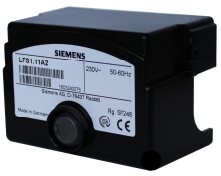
BPZ:LFS1.21A1 **BPZ:LFS1.21A2**	**LFS1.21A1** **LFS1.21A2**	Ionization probe	Continuous operation	
BPZ:LFS1.21A1 **BPZ:LFS1.21A2**	**LFS1.21A1** **LFS1.21A2**	QRA2/QRA4/QRA10	Intermittent	
BPZ:LFS1.21A1 **BPZ:LFS1.21A2**	**LFS1.21A1** **LFS1.21A2**	Ionization probe + QRA2/QRA4/QRA10	Intermittent	

UV flame detector QRA7

UV flame detector for use with Siemens burner controls for the supervision of gas and oil flames. Refer to data sheet N7712.

Article no.	Type	Mains voltage	Detector tube length
BPZ:QRA73.A17	QRA73.A17	120 V AC	125 mm
BPZ:QRA73.A27	QRA73.A27	230 V AC	125 mm
BPZ:QRA75.A17	QRA75.A17	120 V AC	69 mm
BPZ:QRA75.A27	QRA75.A27	230 V AC	69 mm



Infrared flame detector QRI

Infrared flame detector for use with Siemens burner controls for the supervision of gas, oil and other flames that emit infrared light.
Refer to data sheet N7719.

Article no.	Type	
BPZ:QRI2A2.B180B	QRI2A2.B180B	• Frontal illumination • Cable length 180 cm • Stripped
BPZ:QRI2B2.B180B	QRI2B2.B180B	• Lateral illumination • Cable length 180 cm • Stripped
BPZ:QRI2B2.B180B1	QRI2B2.B180B1	• Lateral illumination • Cable length 180 cm • Stripped • Accessory 424188550 Flange with radius and clamp



Ionization probe

Article no.	Type	
Supplied by customer	Supplied by customer	Ionization probe for use with Siemens burner controls for the supervision of gas flames.



Actuators SQN70/SQN71

Electromotoric actuators for air dampers and control valves for oil and gas burners of small to medium capacity.
Holding torque 0.7 Nm to 2.5 Nm.
Running time from 2.5 s to 30 s.
Refer to data sheet N7804 for other types.

Article no.	Type	
BPZ:SQN70.664A20	**SQN70.664A20**	• Diagram no. 6 • Shaft no. 0 • Running time 30 s • Operating torque 2.5 Nm • Holding torque 1.3 Nm • Without potentiometer • Direction of rotation left • 230 V AC
BPZ:SQN71.664A10	**SQN71.664A10**	• Diagram no. 6 • Shaft no. 0 • Running time 30 s • Operating torque 2.5 Nm • Holding torque 1.3 Nm • Without potentiometer • Direction of rotation right • 120 V AC
BPZ:SQN71.664A20	**SQN71.664A20**	• Diagram no. 6 • Shaft no. 0 • Running time 30 s • Operating torque 2.5 Nm • Holding torque 1.3 Nm • Without potentiometer • Direction of rotation right • 230 V AC



Actuator SQN72

Electromotoric actuators for air dampers and control valves for oil and gas burners of small to medium capacity.
Holding torque 0.7 Nm to 2.5 Nm.
Running time from 4 s to 30 s.
Refer to data sheet N7802 for other types.

Article no.	Type	
BPZ:SQN72.6C4A20	**SQN72.6C4A20**	• Diagram C • Shaft no. 0 • Running time 30 s • Operating torque 2.5 Nm • Holding torque 1.3 Nm • With potentiometer • Direction of rotation left • 230 V AC



Actuator SQM40

Electromotoric actuators for air dampers and control valves for oil and gas burners of small to medium capacity.
Holding torque 5 Nm to 10 Nm. Running time from 15 s to 30 s.
Refer to data sheet N7817 for other types.

Article no.	Type	
BPZ:SQM40.281A20	**SQM40.281A20**	• Direction of rotation left • Torque 10 Nm • Running time 30 s • Diagram no. 8 • 3-position step modulation input • Shaft no. 1 • European version • 230 V AC • Without potentiometer
BPZ:SQM40.285R11	**SQM40.285R11**	• Direction of rotation left • Torque 10 Nm • Running time 30 s • Diagram no. 8 • 3-position step modulation input • Shaft no. 5 • US version / Canadian version • 120 V AC • With 90° double potentiometer
BPZ:SQM40.387A20	**SQM40.387A20**	• Direction of rotation left • Torque 18 Nm • Running time 65 s • Diagram no. 8 • 3-position step modulation input • Shaft no. 7 • European version • 230 V AC • Without potentiometer



Actuator SQM41

Electromotoric actuators for air dampers and control valves for oil and gas burners of small to medium capacity.
Holding torque 5 Nm to 10 Nm. Running time from 15 s to 30 s.
Refer to data sheet N7817 for other types.

Article no.	Type	
BPZ:SQM41.285R11	**SQM41.285R11**	• Direction of rotation right • Torque 10 Nm • Running time 30 s • Diagram no. 8 • 3-position step modulation input • Shaft no. 5 • US version / Canadian version • 120 V AC • With 90° double potentiometer
BPZ:SQM41.367A21	**SQM41.367A21**	• Direction of rotation right • Torque 18 Nm • Running time 65 s • Diagram no. 6 • 3-position step modulation input • Shaft no. 7 • European version • 230 V AC • With 90° double potentiometer
BPZ:SQM41.387R11	**SQM41.387R11**	• Direction of rotation right • Torque 18 Nm • Running time 65 s • Diagram no. 8 • 3-position step modulation input • Shaft no. 7 • US version / Canadian version • 120 V AC • With 90° double potentiometer



Actuator SQM5

Electromotoric actuators for air dampers and control valves for oil and gas burners of medium to large capacity.
Holding torque 10 Nm to 40 Nm.
Running time from 15 s to 60 s.
By exchanging the 2 motor connecting cables, the actuator's direction of rotation can be changed from counterclockwise to clockwise (factory settings: counterclockwise).
Refer to data sheet N7815 for other types.

Article no.	Type	
BPZ:SQM50.480A1	**SQM50.480A1**	• Torque / holding torque 15 Nm • Running time 34 s at 90° • Running time 49 s at 130° • 120 V AC
BPZ:SQM50.480A2	**SQM50.480A2**	• Torque / holding torque 15 Nm • Running time 34 s at 90° • Running time 49 s at 130° • 230 V AC
BPZ:SQM50.680A1	**SQM50.680A1**	• Torque / holding torque 15 Nm • Running time 68 s at 90° • Running time 98 s at 130° • 120 V AC
BPZ:SQM53.480A1	**SQM53.480A1**	• Torque / holding torque 25 Nm • Running time 30 s at 90° • Running time 43 s at 130° • 120 V AC
BPZ:SQM53.580A1	**SQM53.580A1**	• Torque / holding torque 25 Nm • Running time 45 s at 90° • Running time 65 s at 130° • 120 V AC
BPZ:SQM54.480A2	**SQM54.480A2**	• Torque / holding torque 25 Nm • Running time 30 s at 90° • Running time 43 s at 130° • 230 V AC
BPZ:SQM54.580A2	**SQM54.580A2**	• Torque / holding torque 25 Nm • Running time 45 s at 90° • Running time 65 s at 130° • 230 V AC
BPZ:SQM56.680A1	**SQM56.680A1**	• Torque / holding torque 40 Nm • Running time 60 s at 90° • Running time 87 s at 130° • 120 V AC
BPZ:SQM56.680A2	**SQM56.680A2**	• Torque / holding torque 40 Nm • Running time 60 s at 90° • Running time 87 s at 130° • 230 V AC



QPLx5 pressure switch

The pressure switch is used to supervise gas or air pressure.
Refer to data sheet N7221.

QPLx5 with automatic reset:

Pressure range	O-ring connection	
	Type	Article no.
0,1…0,3 kPa	QPL15.003B	S55722-S106-A100
0,2…1 kPa	QPL15.010B	S55722-S107-A100
0,5…5 kPa	QPL15.050B	S55722-S108-A100
0,5…15 kPa	QPL15.150B	S55722-S109-A100
10…50 kPa	QPL15.500B	S55722-S110-A100



Pressure range	¼“ connection	
	Type	Article no.
0,1…0,3 kPa	QPL25.003B	S55722-S101-A100
0,2…1 kPa	QPL25.010B	S55722-S102-A100
0,5…5 kPa	QPL25.050B	S55722-S103-A100
0,5…15 kPa	QPL25.150B	S55722-S104-A100
10…50 kPa	QPL25.500B	S55722-S105-A100

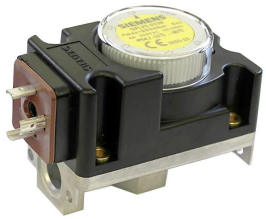

Dummy plug for RJ11

Article no.	Type	
---	---	• For 6-pin modular plug (RJ11) • Supplier recommendation: Molex, order number: 085 999 3256

AGG3 connector sets for LME75/LME76

Article no.	Type		
BPZ:AGG3.710	**AGG3.710**	• Complete connector set • RAST5 and RAST3.5 • Single pack	Example: Terminal X5-03
BPZ:AGG3.720	**AGG3.720**	• 10 complete standard connector sets • RAST5 and RAST3.5 • Packing in bags of 10 pieces for each connector type	

Connection designation	Connector	Description
X2-01	RAST5	Fan motor (M)
X2-02	RAST5	Oil preheater (OW)
X2-03	RAST5	• Alarm (AL) • Reset (EK1)
X2-09B	RAST5	Actuator (SA) (fuel valve V2-cam)
X2-09A	RAST5	Actuator (SA) (CLOSED, low-fire, high-fire, feedback, N)
X3-02	RAST5	Air pressure switch (LP)
X3-04	RAST5	Power supply (L, N, PE) for safety loop (SK)
X4-02	RAST5	Ignition (Z)
X5-01	RAST5	Gas pressure switch-min (Pmin)
X5-03	RAST5	External load controller (LR)
X6-03	RAST5	Safety valve (SV)
X7-01	RAST5	• Fuel valve (V3) • Auxiliary output (AUX) • Pilot valve (PV)
X7-02	RAST5	Fuel valve (V2)
X7-04	RAST5	• Fuel valve (V1) • Operating display (B4)
X9-04	RAST5	• Gas pressure switch (Pmin/Pmax) • Valve proving (P LT)
X10-05	RAST5	• Ionization probe • QRB • QRC
X10-06	RAST5	• QRA2 • QRA4 (USA)
X65	RAST3.5	Analog load controller (LR)
X66	RAST3.5	Actuator (SA) feedback potentiometer
X76	RAST3.5	PWM control

AGG9 connector sets for LME75/LME76

The individual connectors are delivered in packages of up to 200 pieces each.

Article no.	Type	Connector	Terminal
BPZ:AGG9.201	**AGG9.201**	RAST5	X2-09B
BPZ:AGG9.203	**AGG9.203**	RAST5	X3-02
BPZ:AGG9.209	**AGG9.209**	RAST5	X10-06
BPZ:AGG9.301	**AGG9.301**	RAST5	X2-01
BPZ:AGG9.302	**AGG9.302**	RAST5	X2-03
BPZ:AGG9.304	**AGG9.304**	RAST5	X4-02
BPZ:AGG9.306	**AGG9.306**	RAST5	X5-01
BPZ:AGG9.309	**AGG9.309**	RAST5	X6-03
BPZ:AGG9.310	**AGG9.310**	RAST5	X7-01
BPZ:AGG9.311	**AGG9.311**	RAST5	X7-02
BPZ:AGG9.313	**AGG9.313**	RAST5	X9-04
BPZ:AGG9.401	**AGG9.401**	RAST5	X2-02
BPZ:AGG9.403	**AGG9.403**	RAST5	X5-03
BPZ:AGG9.405	**AGG9.405**	RAST5	X7-04
BPZ:AGG9.501	**AGG9.501**	RAST5	X3-04
BPZ:AGG9.504	**AGG9.504**	RAST5	X10-05
BPZ:AGG9.601	**AGG9.601**	RAST5	X2-09A
BPZ:AGG9.822	**AGG9.822**	RAST3.5	X65, 2-pole
BPZ:AGG9.831	**AGG9.831**	RAST3.5	X66, 3-pole
BPZ:AGG9.841	**AGG9.841**	RAST3.5	X76, 4-pole

Example:
Terminal X5-03



OCI410 service tools

Service tool between burner control and PC. Facilitates viewing, processing, and recording of setting parameters on site using the ACS410.
Refer to data sheet N7616.

Article no.	Type	
BPZ:OCI410.30	**OCI410.30**	• Heating engineer version (standard) • Parameter change possible for the *heating engineer* password level
BPZ:OCI410.40	**OCI410.40**	• OEM version • Parameter change possible for the *OEM personnel and heating engineer* password level



PC software ACS410

PC software for parameterization and visualization of the burner control.
On request.
Refer to software documentation J7352.

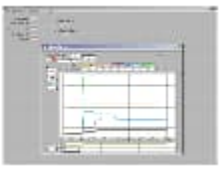

Accessories (to be ordered separately) (continued)

Cloud gateway for communication

OCI460 cloud gateway
Climatix IC communication gateway and Modbus interface with galvanic separation for burner controls, burner management systems, or flame safeguards equipped with Modbus interface or BC interface communication.
Refer to Data Sheet N7600.

OCI460.10
Article no.: **S55666-J401-A100**
- European variant

OCI460.11
Article no.: **S55666-J402-A100**
- Chinese variant



Basic unit LME75/LME76

General

Mains voltage	120 V AC +10%/-15%	230 V AC +10%/-15%
Mains frequency	50/60 Hz	50/60 Hz
External primary fuse	Max. T6.3H250V	Max. T6.3H250V



Warning!
Risk of damage to the switching contacts!
If the external primary fuse (Si) is blown due to overload or short-circuit at the terminals, the LME75 / LME76 must be replaced.

Power consumption	<10 W, typically	<10 W, typically
Protection class I	For the inputs and outputs, the PWM interface terminal X76, the BC interface terminal X56, and the plug-in space for the PME75/PME76	
Protection class II	The housing provides protection against electric shock through double or reinforced insulation. For applications without safe separation from the mains. The terminal X65 and X66 interfaces provide protection against electric shock by means of a voltage limit and protective separation. For applications with safe separation from the mains.	
Degree of protection	IP00 Note The burner or boiler manufacturer must ensure degree of protection IP40 through adequate installation of the LME75/LME76.	
Creepage distances and air gaps	• Overvoltage category III • Rated surge voltage 4 kV at 230 V AC • Pollution degree 2 • Up to 2,000 m above sea level	
Software class	Class C 2-channel structure	
Reaction time in the event of loss of flame	Depending on parameter 217.01 (see *Factory settings*)	
Permissible mounting position	Optional	
Weight	Approx. 490 g	

Terminal loading: *Inputs*

Mains voltage: The input current for the power supply is dependent on the operating status of the LME75/LME76

Undervoltage	U_{Mains} 120 V	U_{Mains} 230 V
• Safety shutdown from the operating position at mains voltage	≤ 75 V AC	≤ 165 V AC
• Restart is initiated when mains voltage exceeds	≥ 100 V AC	≥ 195 V AC

The remote lockout reset (terminal X2-03 pin 1), control thermostat or limit thermostat (terminal X5-03 pin 1), load controller (terminal X5-03 pin 2/3), POC/CPI (terminal X2-02 pin 4), pressure switch (terminal X5-01 pin 2), air pressure switch (terminal X3-02 pin 1), and actuator (terminal X2-09 pin 4) status inputs are used for system supervision and require mains-related input voltage

• Terminal X3-04 pin 1 / pin 2: Safety loop input	Refer to *Terminal loading: Outputs*	
• Input currents and input voltages		
- UeMax	UN +10%	UN +10%
- UeMin	UN -15%	UN -15%
- IeMax	2.5 mA (peak value)	2.5 mA (peak value)
- IeMin	0.8 mA (peak value)	0.8 mA (peak value)
• Contact material recommended for external signal sources (air pressure switch, pressure switch-min, pressure switch-max, etc.)	Gold-plated silver contacts	
• Transition behavior / settling behavior / bounce. - Permitted bounce time of contacts when switching on/off	Max. 50 ms (after the bounce time, the contact must stay closed or open)	
• UN	120 V AC	230 V AC
• Voltage detection		
- ON	>60 V AC	>120 V AC
- OFF	<40 V AC	<80 V AC
Terminal X65: Analog input	0...10 V DC / DC 0/4...20 mA / 0...135 Ω	

ПРОМЭЛЕКТРОНИКА / sales@prom-elec.com

Terminal output: *Outputs*

Total contact loading:

• Rated voltage	120 V AC, 50/60 Hz	230 V AC, 50/60 Hz
• Terminal X3-04: Input current for LME75/LME76	Max. 5 A	Max. 5 A

Note
The input current for the LME75 / LME76 at terminal X3-04 pin 5 also flows through safety loop terminal X3-04 pin 1 / pin 2.
The power supply in the LME75 / LME76 to the fan motor, ignition transformer, fuel valves, and actuators is interrupted as soon as one of the components opens the safety loop circuit.

Individual contact loading:

Terminal X2-01 pin 3: Fan motor

• Rated voltage	120 V AC, 50/60 Hz	230 V AC, 50/60 Hz
• Rated current	2 A (15 A max. 0.5 s)	2 A (15 A max. 0.5 s)
• Power factor	Cosφ ≥0.4	Cosφ ≥0.4

Terminal X2-02 pin 3: PWM fan motor or oil preheater
(depending on the fuel train; refer to User Documentation A7156.x)

• Rated voltage	120 V AC, 50/60 Hz	230 V AC, 50/60 Hz
• Rated current	2 A	2 A
• Power factor	Cosφ ≥0.4	Cosφ ≥0.4

Caution!
Maximum permissible current load may be exceeded!
If terminal X2-02 pin 3 is used as the connection for supplying the PWM fan motor, no other motor may be connected on terminal X2-01 pin 3.

Terminal X2-03 pin 3: Alarm output

• Rated voltage	120 V AC, 50/60 Hz	230 V AC, 50/60 Hz
• Rated current	1 A	1 A
• Power factor	Cosφ ≥0.6	Cosφ ≥0.6

Terminal X2-09 pin 7: Output relay contact K2/2 (actuator cam ZL, V2a)

• Rated voltage	120 V AC, 50/60 Hz	230 V AC, 50/60 Hz
• Rated current	1 A	1 A
• Power factor	Cosφ ≥0.4	Cosφ ≥0.4

Terminal X3-04 pin 2: Safety loop

• Rated voltage	120 V AC, 50/60 Hz	230 V AC, 50/60 Hz
• Total current	2 A	2 A
• Power factor	Cosφ ≥0.4	Cosφ ≥0.4

Terminal X4-02 pin 3: Ignition transformer

• Rated voltage	120 V AC, 50/60 Hz	230 V AC, 50/60 Hz
• Rated current	2 A	2 A
• Power factor	Cosφ ≥0.4	Cosφ ≥0.4

Terminal X6-03 pin 3: Safety valve		
• Rated voltage	120 V AC, 50/60 Hz	230 V AC, 50/60 Hz
• Rated current	1.5 A	1.5 A
• Power factor	Cosφ ≥0.6	Cosφ ≥0.6
Terminal X7-01 pin 3: Fuel valves or pilot valve (depending on the fuel train, see User Manual A7156.x)		
• Rated voltage	120 V AC, 50/60 Hz	230 V AC, 50/60 Hz
• Rated current	1 A	1 A
• Power factor	Cosφ ≥0.4	Cosφ ≥0.4
Terminal X7-02 pin 3: Fuel valve (depending on the fuel train, see User Manual A7156.x)		
• Rated voltage	120 V AC, 50/60 Hz	230 V AC, 50/60 Hz
• Rated current		
- Valve proving inactive	2 A	2 A
- Valve proving active	1 A	1 A
• Power factor	Cosφ ≥0.4	Cosφ ≥0.4
Terminal X7-04 pin 4: Fuel valve or pilot valve (depending on the fuel train, see User Manual A7156.x)		
• Rated voltage	120 V AC, 50/60 Hz	230 V AC, 50/60 Hz
• Rated current		
- Valve proving inactive	2 A	2 A
- Valve proving active	1 A	1 A
• Power factor	Cosφ ≥0.4	Cosφ ≥0.4

Note!
When activating valve proving (e.g., on shutdown), the load on the valve terminals is restricted. If the terminal load is not reduced, the design lifetime is about 100,000 burner start cycles!

Cable lengths

Terminal X2-01: Fan motor	Max. 30 m (100 pF/m), unshielded
Terminal X2-02: Multi-function input (POC, pressure switch valve proving, oil preheater), see User Manual A7156.x	Max. 30 m (100 pF/m), unshielded
Terminal X2-03 Pin 1 / 2: Remote lockout reset (laid separately)	Max. 30 m (100 pF/m), unshielded
Terminal X2-03 Pin 2 / 3: Alarm	Max. 30 m (100 pF/m), unshielded
Terminal X3-02: Air pressure switch	Max. 30 m (100 pF/m), unshielded
Terminal X3-04 Pin 1 / 2: Safety loop	Max. 30 m (100 pF/m), unshielded
Terminal X3-04 Pin 3…5: Mains supply line	Max. 100 m (100 pF/m)
Terminal X4-02 Pin 1…3: Ignition transformer	Max. 30 m (100 pF/m), unshielded
Terminal X5-01: Pressure switch-min	Max. 30 m (100 pF/m), unshielded
Terminal X5-03 Pin 1…4: Load controller	Max. 30 m (100 pF/m), unshielded
Terminal X6-03 Pin 1…3: Safety valve	Max. 30 m (100 pF/m), unshielded
Terminal X7-01 pin 1…3 / Terminal X7-02 pin 1…3 / Terminal X7-04 pin 1…4: Fuel valve	Max. 30 m (100 pF/m), unshielded
Terminal X7-01 Pin 1…3 / X7-04 Pin 1…4: Pilot valve	Max. 30 m (100 pF/m), unshielded
Terminal X9-04: Multi-function input (pressure switch), see User Manual A7156.x	Max. 30 m (100 pF/m), unshielded
Terminal X10-05 / X10-06: Flame detector	Refer to the *Flame supervision* chapter in the LME75/LME76 basic documentation (P7156)
Terminal X56: BC Interface	For use under the burner hood or in a control panel Max. 1 m (100 pF/m), unshielded
Terminal X65: Load controller analog input	Max. 30 m (100 pF/m) For >10 m, use a shielded cable and connect the shield to PE at one end
Terminal X66: Actuator potentiometer feedback	Max. 30 m (100 pF/m) For >10 m, use a shielded cable and connect the shield to PE at one end
Terminal X76: PWM fan motor	Max. 30 m (100 pF/m) For >10 m, use a shielded cable and connect the shield to PE at one end

Type of shutdown or interruption for each circuit	
Shutdown with micro switch	1-pole
Mode of operation	Type 2 B

Actuators

CLOSED / Ignition position / OPEN **Terminal X2-09 pin 1,** **Terminal X2-09 pin 2,** **Terminal X2-09 pin 3**	1 million switching cycles	1 million switching cycles
• Rated voltage	120 V AC, 50/60 Hz	230 V AC, 50/60 Hz
• Rated current	0.1 A	0.1 A
• Power factor	Cosφ ≥0.6	Cosφ ≥0.6
Output K2/2 terminal X2-09 pin 7	120 V AC, 50/60 Hz	230 V AC, 50/60 Hz
• Rated current	Max. 1 A	Max. 1 A
• Power factor	Cosφ >0.4	Cosφ >0.4

Feedback via input terminal X2-09 pin 8 on the LME75/LME76 depending on the current load of the actuator switching contact used (e.g., cam V2 / V2a).

PWM interface

Terminal X76 pin 1: Power supply	24 V DC Max. 10 mA
Terminal X76 pin 2: PWM output signal	12...24 V DC Max. 0.5 mA ~2.4 kHz
Terminal X76 pin 3: Hall input signal	12...24 V DC 0.4...1 mA
Terminal X76 pin 4: GND	

Cross-sectional areas

The cross-sectional areas of the mains power lines (L, N, PE) and, if required, the safety loop (safety limit thermostat, water shortage, etc.) must be sized for rated currents according to the selected external primary fuse. The cross-sectional areas of the other cables must be sized in accordance with the primary fuse for the LME75/LME76 (max. 6.3 AT).



Warning!
Risk of damage to the switching contacts!
If the external primary fuse (Si) is blown due to overload or short-circuit at the terminals, the LME75 / LME76 must be replaced.

Minimum cross-sectional area	0.75 mm² (single-core or multi-core)

Cable insulation must be suitable for the respective temperatures and environmental conditions.

RAST3.5 connector

Mechanical data

Connection cross sections, conductor screw connection	
• Stranded conductor, fine-wired (flexible)	Cross section Min. 0.14 mm² Max. 1.5 mm²
• Stranded conductor, fine-wired (flexible) with ferrule	Cross section Min. 0.25 mm² Max. 1 mm²
• Stripping length	Approx. 7 mm
• Screw tightening torque	0.25 Nm

RAST5 connector

Mechanical data

Insertion force / contact	≤4 N
Withdrawal force / contact	≥1 N
Tightening torque / screw	0.5 Nm
Contacting with flat pin connector	6.3 x 0.8 mm Male multipoint connector in accordance with RAST5 standard
Connection cross sections, conductor screw connection	
• Stranded conductor	Cross section max. 2.5 mm²
• Stranded conductor with ferrule	Cross section max. 2.5 mm²
• Stripping length	Approx. 8 mm

Signal cable AGV50
AZL2/OCI410 → BC interface

Signal cable	Color white Unshielded Conductor 4 x 0.141 mm² With RJ11 connector
Cable length AGV50	1 m
Place of installation	Under the burner hood (additional measures necessary for protection class II)

Dummy plug for RJ11

Dummy plug	For 6 pin modular plug (RJ11)
Supplier	Recommendation: Molex Order number: 085 999 3256

Environmental conditions

Storage	EN 60721-3-1:1997
Climatic conditions	Class 1K3
Mechanical conditions	Class 1M2
Temperature range	-40...+70°C
Humidity	<95% r.h.
Transport	EN 60721-3-2:1997
Climatic conditions	Class 2K3
Mechanical conditions	Class 2M2
Temperature range	-40...+70°C
Humidity	<95% r.h.
Operation	EN 60721-3-3:1995 + A2:1997
Climatic conditions	Class 3K3
Mechanical conditions	Class 3M2
Temperature range	-40...+60°C
Humidity	<95% r.h.
Installation altitude	Max. 2,000 m above sea level



Warning!
Condensation, formation of ice, and ingress of water are not permitted. Failure to observe this poses a risk of damaging the safety functions and the risk of electric shock.

Flame supervision with ionization probe

With LME75/LME76 at terminal X10-06.

No-load voltage at ionization probe terminal (terminal X10-05, pin 2)	300 V AC



Warning!
- **Provide protection to prevent people from coming into contact with the ionization probe (risk of electric shock)!**
- **When monitoring ionization currents in earth-free mains, connect terminal X10-06/1 pin 1 to burner ground**

Short circuit current	Max. AC 1 mA
Permissible length of detector cable (normal cable, laid separately). Multi-core cables are not permitted.	30 m (100 pF/m), unshielded

	At mains voltage	Flame intensity parameter 954.00
	120 V AC / 230 V AC	
Detector voltage between ionization probe and ground (AC voltmeter Ri ≥10 MΩ)	Approx. 300 V AC	
Switching threshold (limit values):		
Switching on (flame ON) (DC ammeter Ri ≤5 kΩ)	1.5 µA	20%
Switching off (flame OFF) (DC ammeter Ri ≤5 kΩ)	0.5 µA	<10%
Recommended detector current for reliable operation	4 µA	>40%
Switching threshold in the event of poor flame during operation (LED flashes green)	2 µA	Approx. 30%
Possible detector current with flame (typical)	30 µA	100%



Note!
As the detector line capacitance (detector line length) increases, the voltage at the ionization probe – and thus the detector current – will drop. Long line lengths and very high-ohmic flames may necessitate the use of a low-capacitance detector cable (e.g., ignition cable). In spite of special electronic circuits designed to compensate possible adverse effects of the ignition spark on the ionization current, it is important to ensure that the minimum detector current required is already available during the ignition phase. If this is not the case, the primary ignition transformer connections must be interchanged and/or the electrodes relocated.

Connection diagram

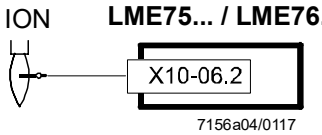

Assignment of terminals for LME75/LME76:
Terminal X10-06 pin 2
Flame signal ionization input

Measuring circuit for detector current measurement

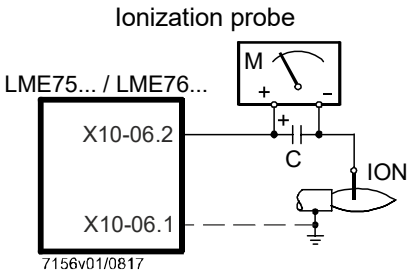

Key

C	Electrolytic condenser 100...470 µF; 10...25 V DC
ION	Ionization probe
M	Micro-ammeter Ri max. 5000 Ω

Warning!
If the ionization probe and QRA7, QRI, or LFS1 are operated simultaneously, the parameter settings in the following chapters must be observed: “Ionization probe terminal X10-06”, “QRA7/QRI terminal X10-05 (LME75 only)”, and “LFS1 terminal X10-05 (LME76 only)” in the basic documentation for the LME75/LME76 (P7156).
If this is not observed, there is a risk of device functions being impaired.

Flame supervision with QRA7

With LME75 at terminal X10-05.

Warning!
The QRA7 must not be connected to the LME76. Failure to observe this instruction will result in the LME76 or QRA7 becoming defective.

Caution!
If QRA7 flame detectors are used for flame supervision on the LME75, it must be ensured that the LME75 is permanently connected to power (conforming to EN 298), thus enabling the system to detect flame detector failures during startup and shutdown. The system generally operates with QRA7 flame detectors in intermittent operation. Failure to observe this information poses a risk of the safety functions being impaired.
Refer to chapter *Technical data* in data sheet N7712 for the QRA7 UV flame detector!

Supply voltage (terminal X10-05 pin 4 / terminal X10-05 pin 5)	
• QRA73.A17	120 V AC / 50...60 Hz
• QRA73.A27	230 V AC / 50...60 Hz
• QRA75.A17	120 V AC / 50...60 Hz
• QRA75.A27	230 V AC / 50...60 Hz
Shutter signal for detector test QRA7 in operation (terminal X10-05 pin 2)	
• Operation	14 V DC
• Detector test	21 V DC
Required flame signal voltage (terminal X10-05 pin 1)	Min. 3.5 V DC
Threshold values when flame is supervised by QRA7	
• Start prevention (extraneous light)	Flame intensity > 5% (parameter 954.01)
• Operation	Flame intensity > 50% (parameter 954.01)
Permissible length of detector cable (laid separately) Multi-core cables are not permitted.	Max. 100 m
• 6-core cable	>4 m (signal line and supply line laid separately)
• Supply line no. 1, 2, and PE	Max. 100 m (separate from signal line)
• Signal line no. 3, 4, and 5	For >10 m, use a shielded cable and connect the shield to PE at one end

Parameter	Function
954.01	Intensity of flame

Connection diagram

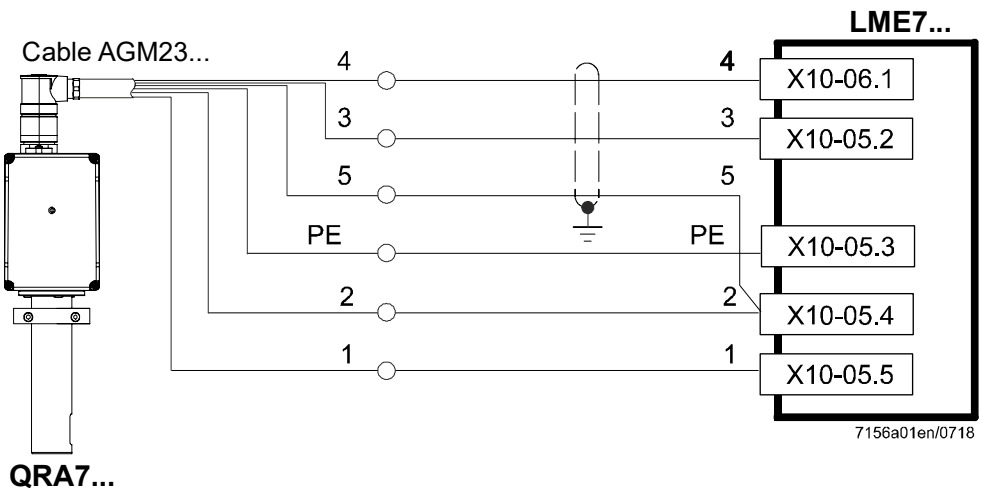

Connection diagram with flame signal measurement

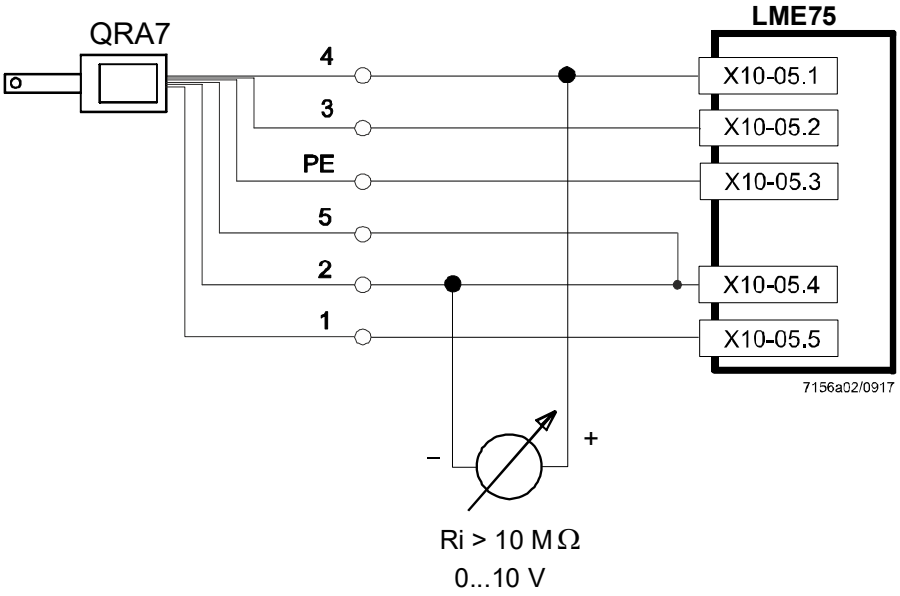

Assignment of terminals for LME75/LME76:

X10-05 pin 1	QRA7 flame signal
X10-05 pin 2	QRA7 detector test
X10-05 pin 3	PE
X10-05 pin 4	N
X10-05 pin 5	L

Warning!

- **The output terminal X10-05 pin 2 *QRA7 detector test* is not short-circuit-proof!**
  A short-circuit in terminal X10-05 pin 2 to ground can destroy the QRA7 output
- **If the ionization probe and QRA7, QRI, or LFS1 are operated simultaneously, the parameter settings in the following chapters must be observed: “Ionization probe terminal X10-06”, “QRA7/QRI terminal X10-05 (LME75 only)”, and “LFS1 terminal X10-05 (LME76 only)” in the basic documentation for the LME75/LME76 (P7156).**
  If this is not observed, there is a risk of device functions being impaired.

Flame supervision with QRI

With LME75 at terminal X10-05.

Warning!
The QRI must not be connected to the LME76. Failure to observe this instruction will result in the LME76 or QRI becoming defective.

Caution!
All measured voltages refer to connection terminal N (terminal X10-05 pin 4).

QRI detector test in operation (terminal X10-05 pin 2)	
• Operation	14 V DC
• Detector test	21 V DC
Required flame signal voltage (terminal X10-05 pin 1)	Min. 3.5 V DC
Threshold values when flame is supervised by QRI	
• Start prevention (extraneous light)	Flame intensity > 5% (parameter 954.01)
• Operation	Flame intensity > 50% (parameter 954.01)
Permissible length of detector cable (laid separately) Multi-core cables are not permitted.	Max. 100 m Min. 3 cm distance to other cables For >10 m, use a shielded cable and connect the shield to PE at one end

Parameter	Function
954.01	Intensity of flame

For more detailed information about QRI, refer to data sheet N7719.

Connection diagram

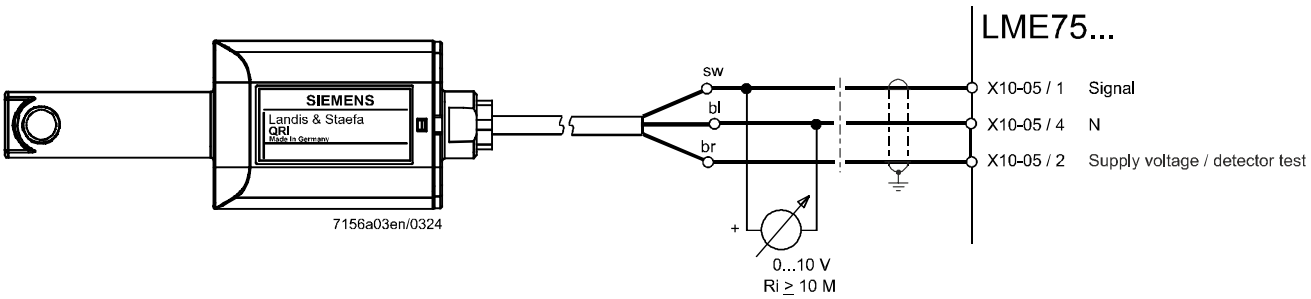

Caution!
Ensure the 3 QRI connecting wires are connected properly. If connected incorrectly to terminal X10-05, there is a risk that the LME75 and QRI may malfunction.

Flame supervision with LFS1

With LME76 at terminal X10-05.

Warning!
An LFS1 or the connection between terminal X10-05 pin 5 and terminal X10-05 pin 1 must not be connected to the LME75. Failure to observe this instruction will result in the LME75 becoming defective.

Caution!
Continuous operation of the LME76 with LFS1 is only permitted in conjunction with…

- **LFS1.11Ax and RAR9**
- **LFS1.21Ax and ionization probe**

It is only permitted to operate the LME76 with the LFS1.21Ax and QRA2/QRA4/QRA10 intermittently (with a maximum continuous operation of 24 hours).

Parameter 239 = 1 and parameter 218 = 80050.31 seconds or with external control via heat request < 24 hours.

Notes
Lifetime of the UV cell
UV cells and the QRA2/QRA4/QRA10 are subject to wear and tear and must be replaced as part of regular maintenance, at the latest at the end of the average lifetime of the UV cell. The lifetime of the UV cell corresponds to approx. 10,000 hours at a maximum of +50°C; higher ambient temperatures reduce the lifetime considerably.
For details, refer to chapter *Technical data* in data sheet N7712 for the QRA2/QRA10.
For details, refer to chapter *Technical data* in data sheet N7711 for the QRA4.

		Intensity of flame
Required flame signal during operation	Mains voltage at terminal X10-05 pin 3 **and** no mains voltage at terminal X10-05 pin 1	100%
No flame signal during operation	Mains voltage at terminal X10-05 pin 1 **or** no mains voltage at terminal X10-05 pin 3	0%
Extraneous light in standby / startup	Mains voltage at terminal X10-05 pin 3 **or** no mains voltage at terminal X10-05 pin 1	100%
No extraneous light in standby / startup	Mains voltage at terminal X10-05 pin 1 **and** no mains voltage at terminal X10-05 pin 3	0%

Parameter	Function
954.01	Intensity of flame

For more detailed information on LFS1, refer to data sheet N7782 and user documentation A7782.

Connection diagram of an ionization probe only without LFS1

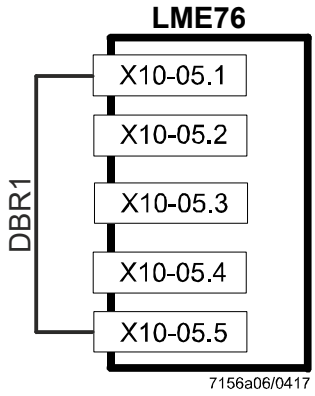

Connection diagram with LFS1

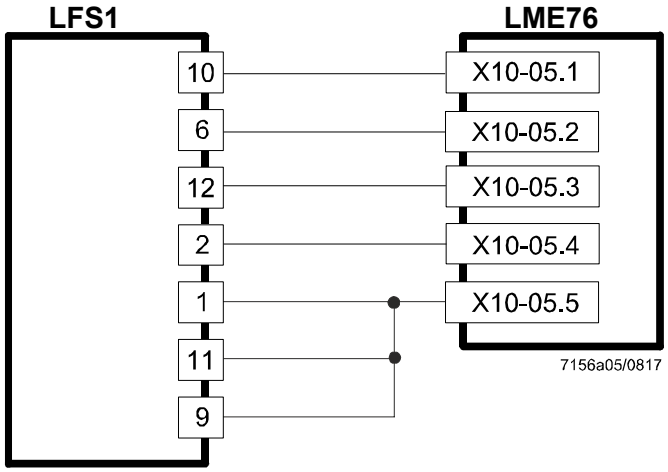

Caution!
Refer to the documentation for the LFS1
→ Data sheet N7782
→ User documentation A7782

Caution!
Refer to the documentation for the PME76
→ User documentation A7156.xx

Connection diagram with LFS1 OR operation

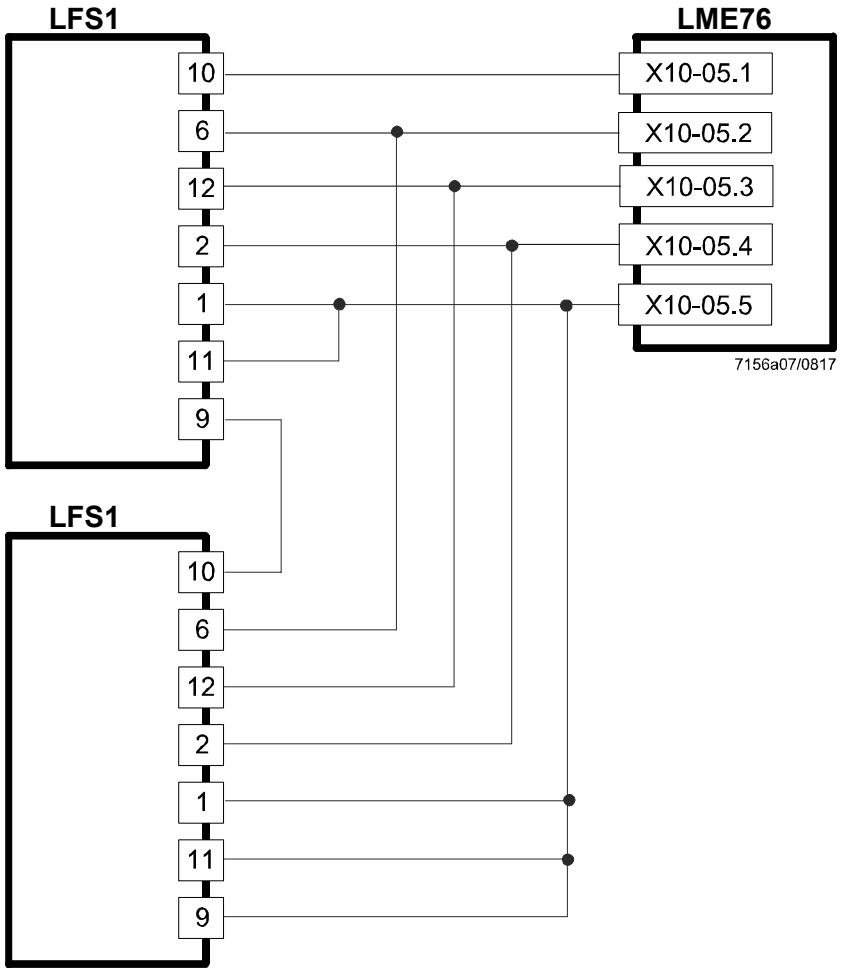

Caution!
Refer to the documentation for the PME76
→ User documentation A7156.xx

Connection diagram with LFS1 AND operation

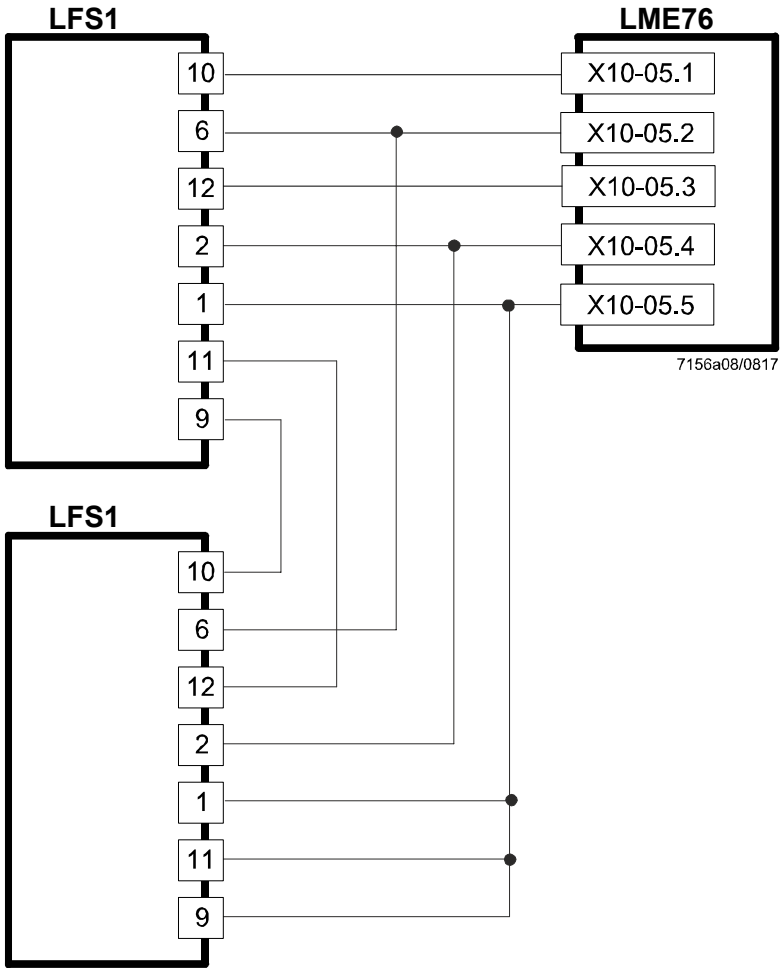

Caution!
Refer to the documentation for the PME76
→ User documentation A7156.xx

Assignment of terminals for plug AGG9 → LME75

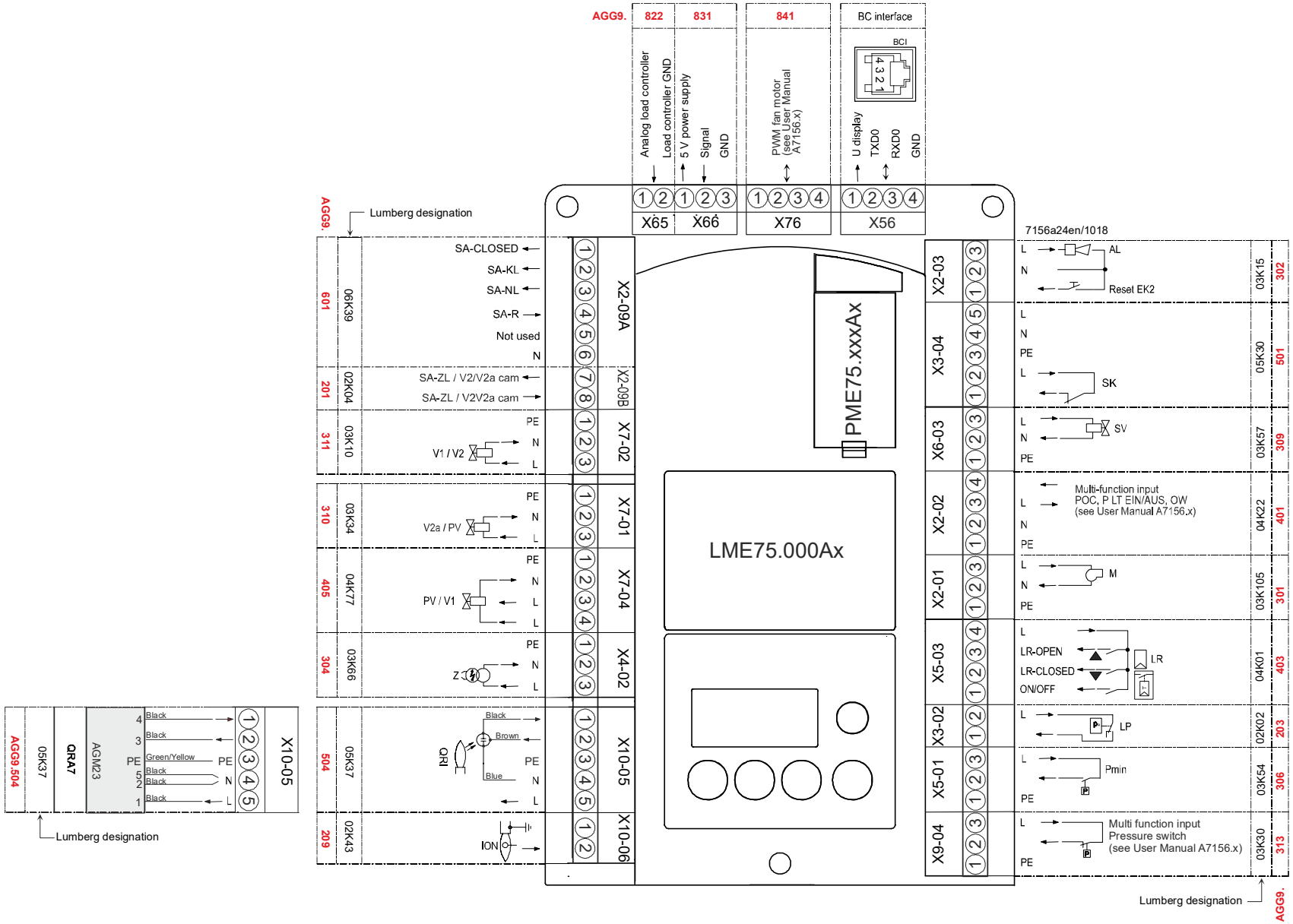

Assignment of terminals for plug AGG9 → LME76

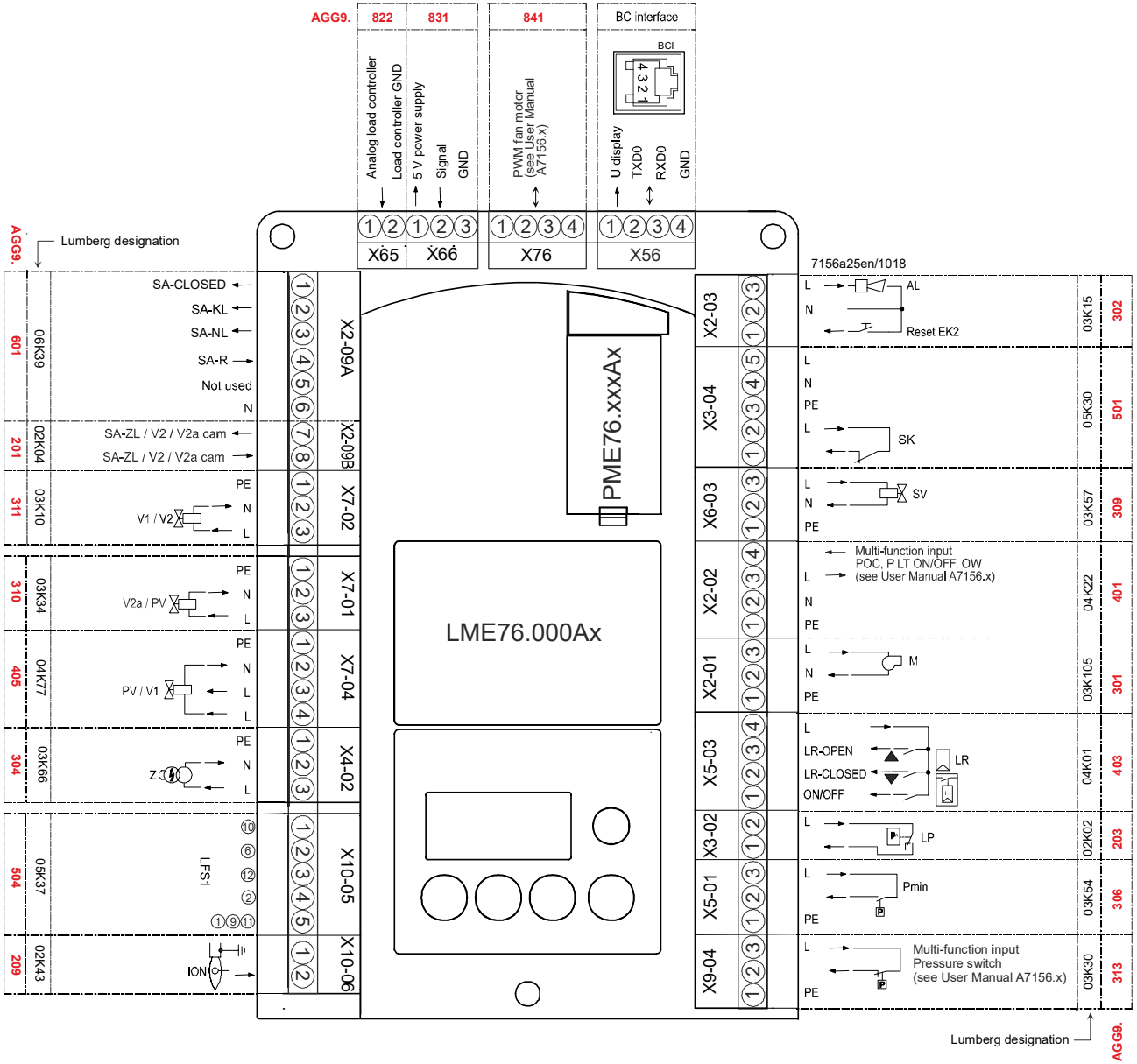

LME75 internal diagram

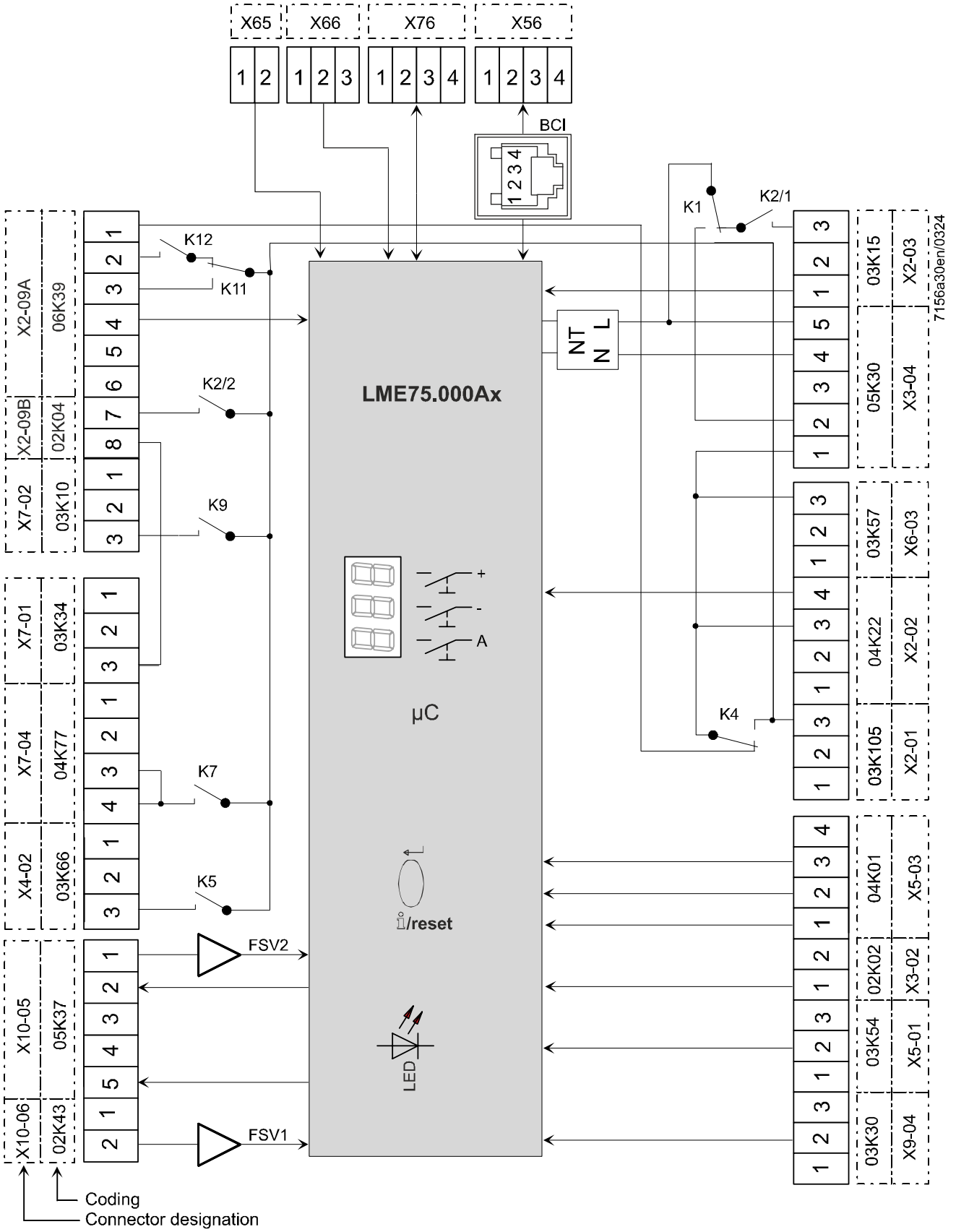

LME76 internal diagram

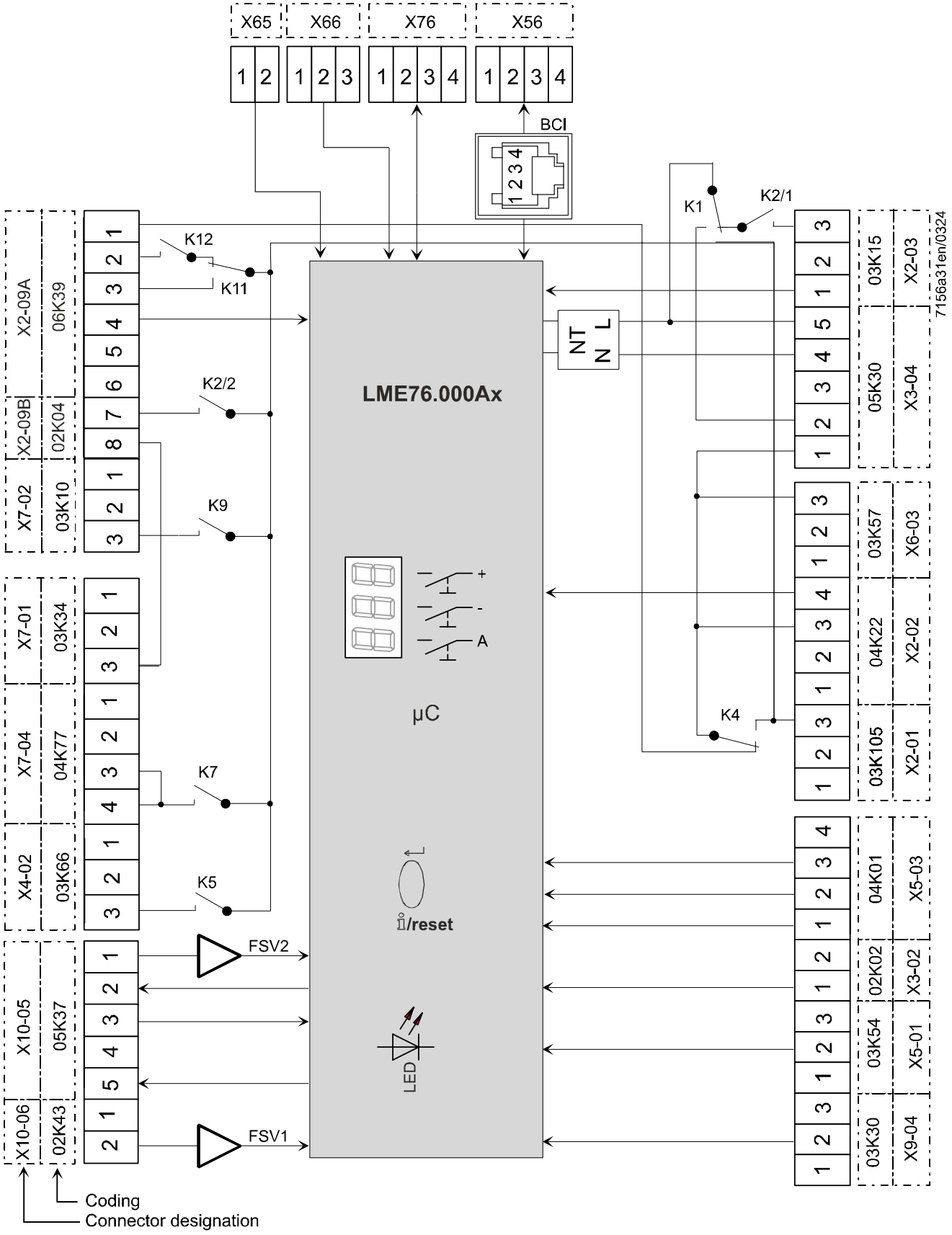

Key

AL	Alarm device
Dbr...	Wire link
 i/reset (EK1)	Lockout reset button (info button)
EK2	Remote lockout reset button
FSV	Flame signal amplifier
ION	Ionization probe
Kx	Relay contact
LED	3-color signal lamp
LFS1	Flame safeguard
LP	Air pressure switch
LR	Load controller
LR-OPEN	Load controller OPEN position
LR-CLOSED	Load controller CLOSED position
M	Fan motor
NT	Power supply unit
P LT	Pressure switch valve proving
Pmax	Pressure switch-max
Pmin	Pressure switch-min
POC	Valve closing control (proof of closure)
PV	Pilot valve
QRA7	UV flame detector
QRI	Infrared flame detector
R	Control thermostat or pressurestat
SA	Actuator
SA-KL	Actuator low-fire
SA-NL	Actuator high-fire
SA-R	Actuator feedback
SA-CLOSED	Actuator CLOSED
SA-ZL	Actuator ignition load
SK	Safety loop
STB	Safety temperature limiter
SV	Safety valve
V1	Fuel valve
V2	Fuel valve
V2a	Fuel valve
W	Temperature limiter or pressure switch
Z	Ignition transformer

	Input/output signal 1 (ON)
	Input/output signal 0 (OFF)
	Permissible signal 1 (ON) or 0 (OFF)

Dimensions

Dimensions in mm

LME75/LME76

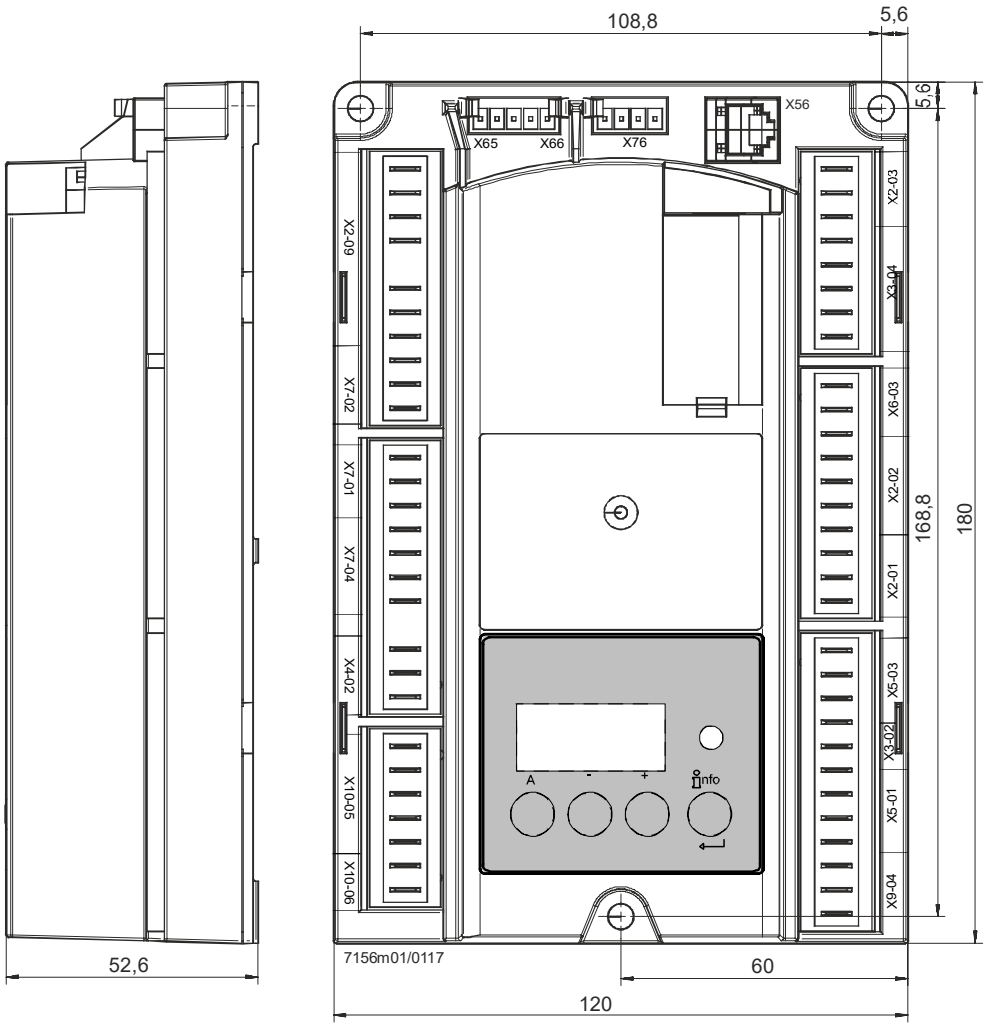

©2024 Siemens AG Smart Infrastructure, Berliner Ring 23, 76437 Rastatt, Germany
Subject to change!