Technical information
Monobloc burners

Weishaupt monarch® burners
WM 10–30 100–5 700 kW

WM 10–30

Burners with oil preheating

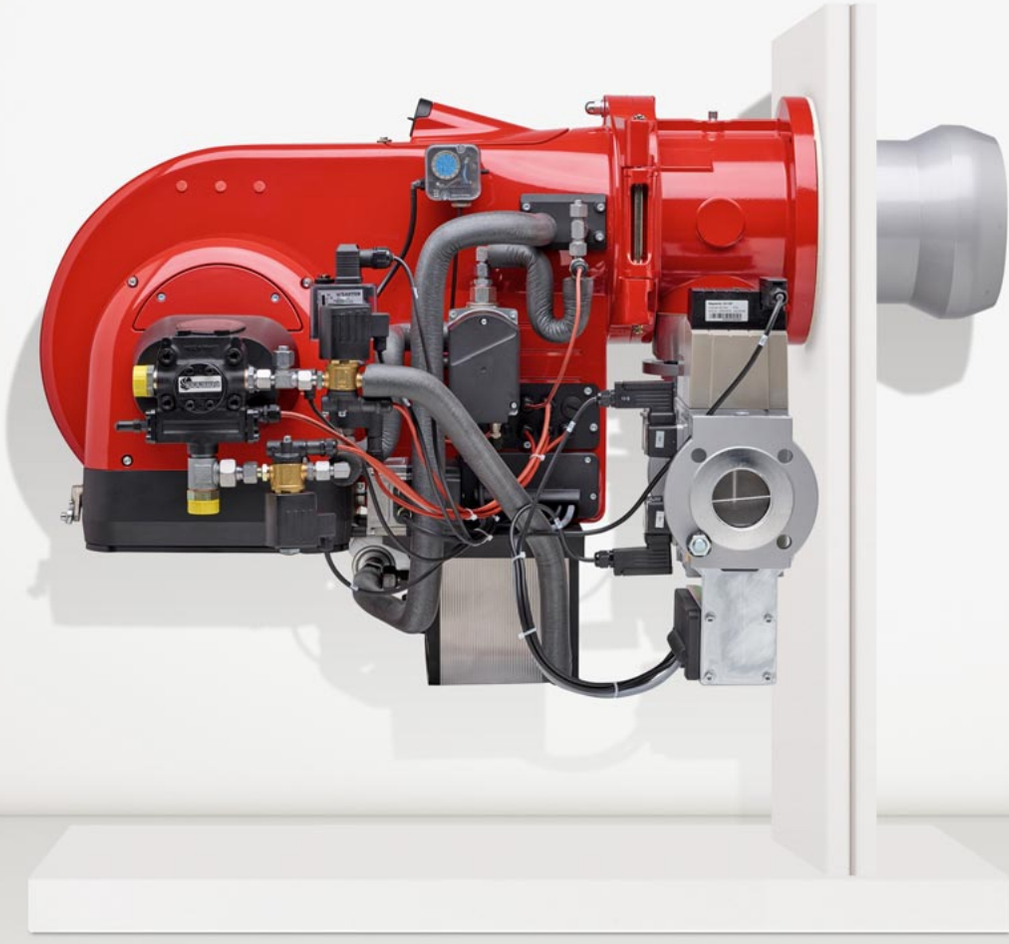

ПРОМЭЛЕКТРОНИКА / sales@prom-elec.com

Progress and tradition.



For decades, the monarch® trademark has stood for burner power and quality.

Weishaupt's monarch®-series burners have been used on a wide variety of heat generators and industrial plant for more than seven decades and their success has helped underpin Weishaupt's outstanding reputation.

The latest monarch® series is writing the next chapter in this success story. State-of-the-art technology and a compact design combine to make these powerful burners suitable for a wide range of applications.

Use.

Fuels
- Natural gas
- LPG
- Class E LFO per BS 2869 / IS 251
- Class F MFO per BS 2869 / IS 251
- Class G HFO per BS 2869 / IS 251
- Class H fuel oil per BS 2869 / IS 251 [1)]

[1)] Max. kinemaic viscosity 50 mm²/s at 50 °C

The suitability of fuels of differing quality must be confirmed in advance with Weishaupt.

Applications
Weishaupt WM 10–30 oil and dual-fuel burners are suitable for intermittent firing and continuous firing on:
- EN 303-compliant heat generators
- LTHW boilers
- HTHW boilers
- Steam boilers
- Air heaters
- Certain process applications

Permissible ambient conditions
- Ambient temperature
  -15 °C to +40 °C for gas firing
  -10 °C to +40 °C for oil firing
- Maximum 80 % relative humidity, no condensation
- Combustion air must be free of aggressive substances (halogens, chlorides, fluorides, etc.) and impurities (dust, debris, vapours, etc.)
- Adequate ventilation must be ensured for operation in enclosed spaces
- For plant in unheated areas, certain further measures may be required

Use of the burner for other applications or in ambient conditions not detailed above is not permitted without the prior written agreement of Max Weishaupt GmbH. Service intervals will be reduced in accordance with the more extreme operational conditions.

Protection class
IP 40

EU directives and regulations
The burners are independently tested and certified by a Notified Body. They fulfil the applicable requirements of the following EU directives and regulations:

EMC	EMC Directive 2014/30/EU
LVD	Low-Voltage Directive 2014/35/EU
MD	Machinery Directive 2006/42/EC
GAR	Gas Appliance Regulations (EU) 2016/426
PED[2)]	Pressure Equipment Directive 2014/68/EU
RoHS	Restriction of Hazardous Substances Directive 2011/65/EU

[2)] With the appropriate choice of equipment.

The relevant applied standards are detailed in the declaration of conformity.

All burners are labelled with:
- CE mark

Type-tested oil burners are labelled with:
- DIN CERTCO label and Reg. No.

Type-tested dual-fuel (gas / oil) burners are labelled with:
- CE-PIN per Regulation (EU) 2016/426
- Identification number of the Notified Body
- DIN CERTCO label and Reg. No.



Fossil and biogenic fuels



Higher-viscosity liquid fuels have many different origins. They include fossil fuels, such as MFO and HFO, and biogenic fuels, which are predominantly produced from rapeseed, soya beans, sunflowers, and oil palms.

Crude-based oils

The composition of oils supplied by oilfields around the world vary greatly. They vary in their viscosity, sulphur content, water content, and in the mix of other constituents. However, they are all hydrocarbon compounds.

Heavy fuel oil

Heavy fuel oil, HFO, is a high-viscosity residual fuel oil. HFO is the product remaining after the more valuable cuts of crude oil have been distilled. It is a particularly viscous, almost black oil.



Examples of biogenic fuels

Soya bean oil
Cold-pressed soya oil is extracted from soya beans, which are a type of legume (pulse). The main value of soya beans lies in their high protein and oil content (about 39 % and 17 % respectively), the latter of which is unusually high for beans.



Generally
Higher viscosity oils, for example crude oils, reprocessed waste oils, or vegetable oils such as rapeseed or soya bean oil, need to be analysed in advance. Due to the different qualities of the fuels, the burner execution has to be matched to the fuel.

Rapeseed oil
Cold-pressed rapeseed oil is extracted from various cultivars of rapeseed. Rapeseed oil is used as a raw material in the production of rapeseed methyl ester (RME) and is one of a group of oils known as fatty acid methyl esters (FAME).

Rapeseed oil has a viscosity of around 38 mm^2/s at 40 °C. However, the range of tolerance is quite large and therefore a fuel specification is always required for approval.



WM-S burners
with staged load control

Weishaupt's high-quality production is not limited to a small number of models. It offers a complete range, including some niche products.

WM-S10 and WM-S20 monarch® burners, designed for the combustion of preheated oils, are the modern sucessors to Weishaupt's legendary medium and heavy-oil burners.

The WM-S burners share the many positive features of the WM-L burners on which they are based, such as:
- A compact, aerodynamic design.
- Low operational noise levels.
- Digital combustion management providing a precise dosing of fuel and air.

They have many other key features, the most notable of which include:
- A choice between underslung or side-mounted oil preheater.
- A compact valve block, reducing oil lines to just a supply and return.
- Insulated oil lines.
- A specially designed recirculating nozzle assembly with two or three nozzles.
- A mixing assembly optimised for the fuel to ensure the best combustion results.

WM-S10 burners with staged load control are suitable for oil viscosities up to 75 mm²/s at 50 °C.

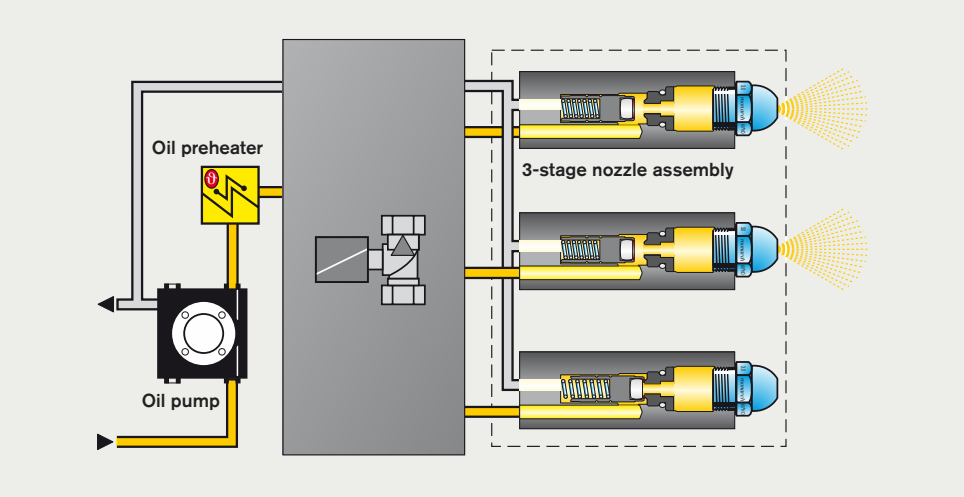

The oil-side components of a three-stage WM-S10 burner



Solenoid valve block
A new and compact solenoid valve block was developed for hydraulic control of the nozzle assembly. It brings all of the solenoid valves together within a single unit. For the first time, two-way solenoid valves are used throughout.

Compact solenoid valve block



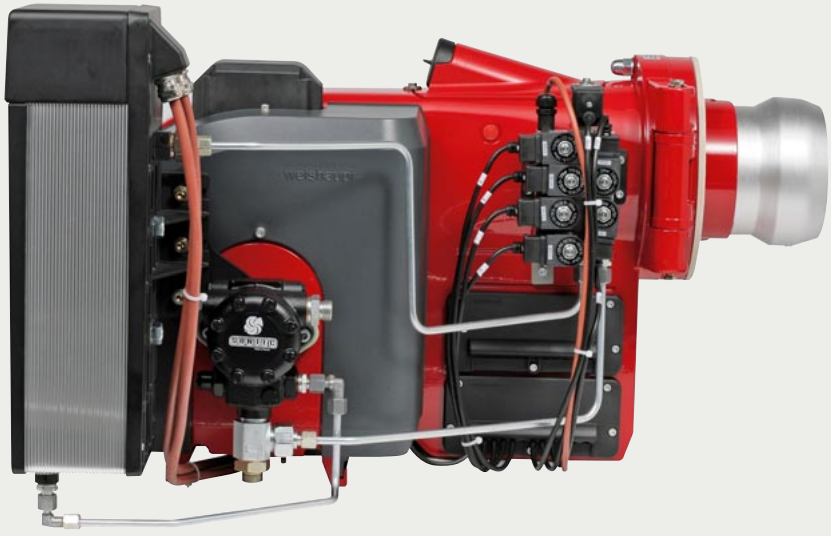

WM-S10 with underslung or side-mounted oil preheater

The right version for every application.

Load control
WM-S20 R and WM-S30 R
Depending on the type of load controller employed, the following load control options are available for single-fuel burners:
Oil: Sliding-two-stage or modulating (R)

Load control
WM-GS20 ZM-R and WM-GS30 ZM-R
Depending on the type of load controller employed, the following load control options are available for dual-fuel burners:
Gas: Sliding-two-stage or modulating (ZM)
Oil: Sliding-two-stage or modulating (R)

The output of a modulating burner is matched – within its operating range – to current heat demand.

Sliding-two stage and modulating operation both ensure a gentle and problem-free start up, along with a high degree of operational reliability.

Preheating
The burner's electric preheater is able to heat high-viscosity oil very rapidly to precisely the required atomisation temperature. This is due to the large heat-exchanging surface and the relatively small oil volume. Rapid distribuition of heat prevents any localised overheating that would lead to the 'cracking' of the oil.

Other components, such as the solenoid valve block and the nozzle assembly, are compactly constructed and kept at standby temperature by a low-power heating cartridge.

The oil lines are thermally insulated to keep heat losses between the preheater and the nozzles to a minimum. If the oil's setting point is close to or below the ambient temperature then the oil lines will need to be traced.

Recirculation
The recirculation of preheated oil all the way up to the nozzle ensures there will be oil at the ideal atomisation temperature available immediately at the time of fuel release and ignition.

Electrical connection
Local regulations and fusing requirements must be observed when connecting gas, oil, and dual-fuel burners to the electrical power supply.

Burners with oil preheating do not have all of their electrical components mounted on the burner itself. Consequently, these and any other project-related components have to be accommodated by others.

Weishaupt can offer wall-mounted or free-standing control panels for all electrical components. Alternatively, pre-assembled and tested switchgear can be supplied for integration with existing control panels.

The key benefits:
- Burner-mounted oil preheater
- Insulated oil lines
- Recirculating nozzle assembly
- Easy changeover between gas and oil on dual-fuel burners
- Digital combustion management with electronic compound regulation
- Compact design
- Sound-attenuated air inlet as standard for quieter operation
- Powerful fan with specially developed fan geometry and air damper control
- Electromagnetic clutch for decoupling of the oil pump is standard on WM-GS burners
- Easy access to all components, such as the mixing assembly, air damper and digital combustion manager
- Reliable operation with sliding-two-stage or modulating operation, depending on the burner version and method of load control
- Computer-controlled function test of each individual burner at the factory
- Burners can be supplied with pre-wired plug connections
- Excellent price / capacity relationship
- Well-established, global service network

Trademark protection
Weishaupt WM-series monarch® burners are registered as a Community Trade Mark throughout Europe.

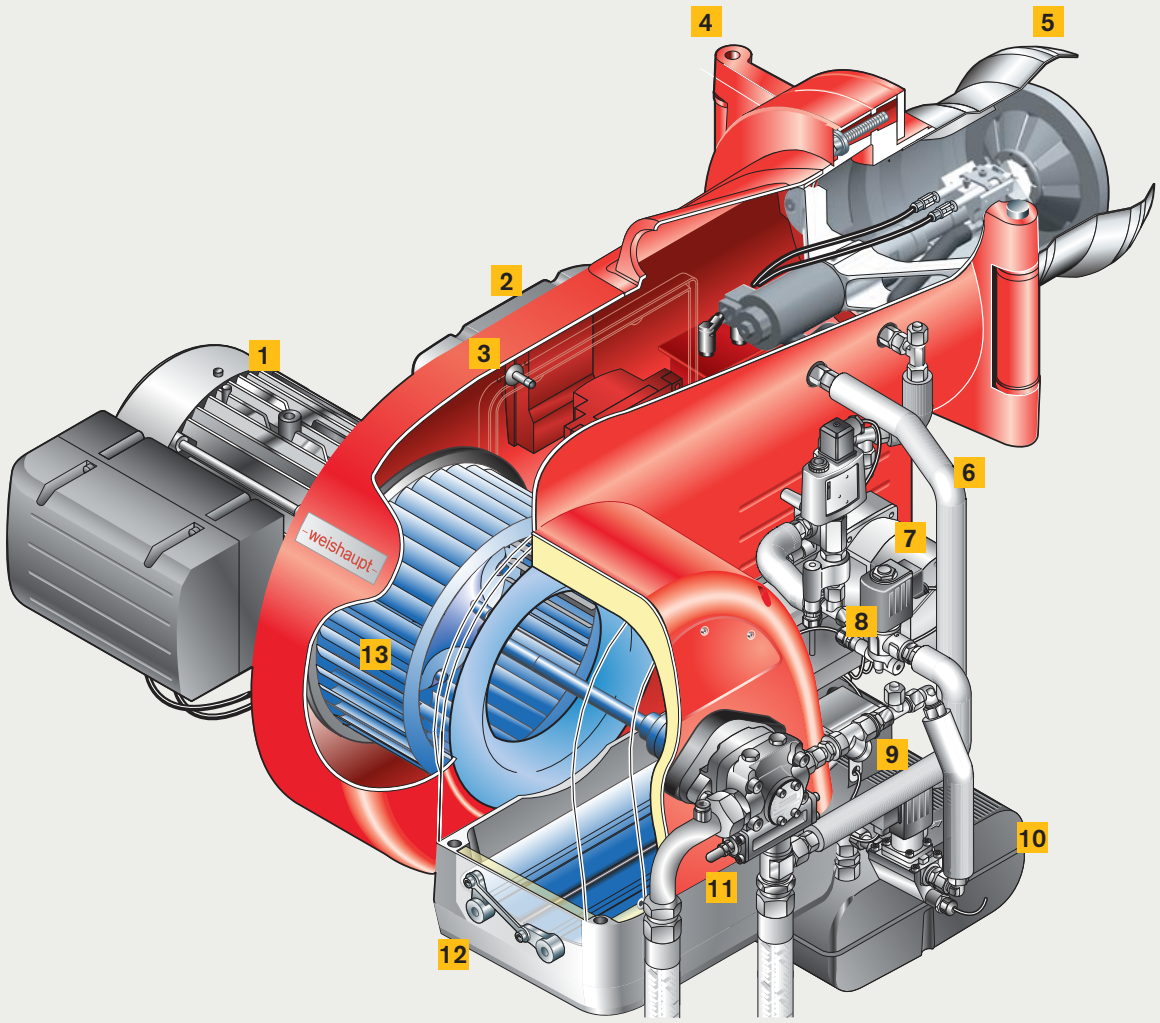

WM-S30 version R

1 Burner motor with integral star-delta combination

2 Digital combustion manager and inbuilt control and display unit

3 Flame sensor

4 Burner housing can be hinged open to the left or right-hand side

5 Mixing assembly

6 Insulated oil line

7 Oil regulator actuator

8 Heated oil solenoid valve

9 Oil strainer

10 Electric oil preheater

11 Heated oil pump

12 Sound-attenuated air inlet housing

13 Fan wheel

Oil preheater

Viscosity is one of the key criteria for the combustion of liquid fuels.

A viscosity of no more than 10 mm²/s is appropriate for optimal atomisation. Generally, low-viscosity fuels will fulfil this criterion at a temperature of 20 °C. Medium and high-viscosity fuels, however, will not. Therefore some thermal input is needed to ensure the optimal combustion of these fuels.

Weishaupt's electric preheaters are one way of bringing the oil up to a higher temperature and thus bringing its viscosity to a suitable point. Weishaupt's electric oil preheaters offer the benefits of even heat transfer, ideal temperature sensor positioning, low pressure losses, and a compact design.

1 Temperature limiter
2 Temperature regulator
3 Thermostat
4 Outlet
5 Electrical heating element
6 Heating coil
7 Inlet

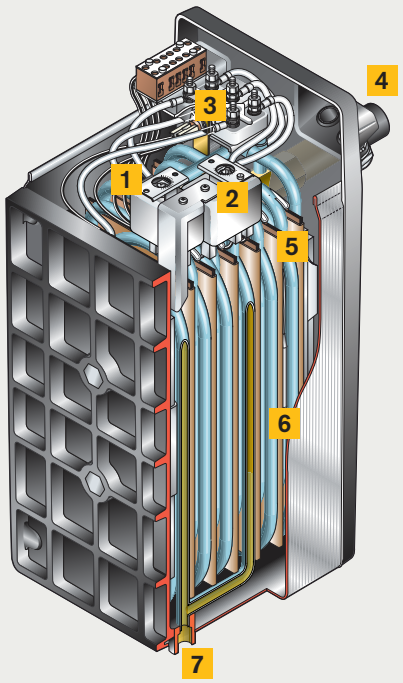

EV2D electric oil preheater

Medium preheaters are another way of bringing medium and high-viscosity fuels up to atomisation temperature. They can operate alone to preheat the oil or provide support to an electric preheater. The combined variant has the advantage that the system can be cold-started even with a single-fuel burner. If a medium preheater were to be used on its own, then an additional fuel, such as gas, would be needed to bring the system up to operating temperature.

Weishaupt's MV-type medium preheaters are suitable for LTHW, HTHW, thermal fluid, and steam. They operate on a three-pass basis, transferring heat to a double heat exchanger coil. Medium-specific and/or thermostatic controllers are used to maintain temperature by determining the flow rate of the medium.

Medium preheaters are a complete assembly, with the safety and control thermostats needed for control of the burner integrated into its connection unit

1 Temperature limiter

2 Pt100 temperature sensor for DR100

3 Temperature limiter capillary sensor

4 Housing

5 Outlet

6 Inlet

7 Electrical heating element

8 Cast aluminium heating coil

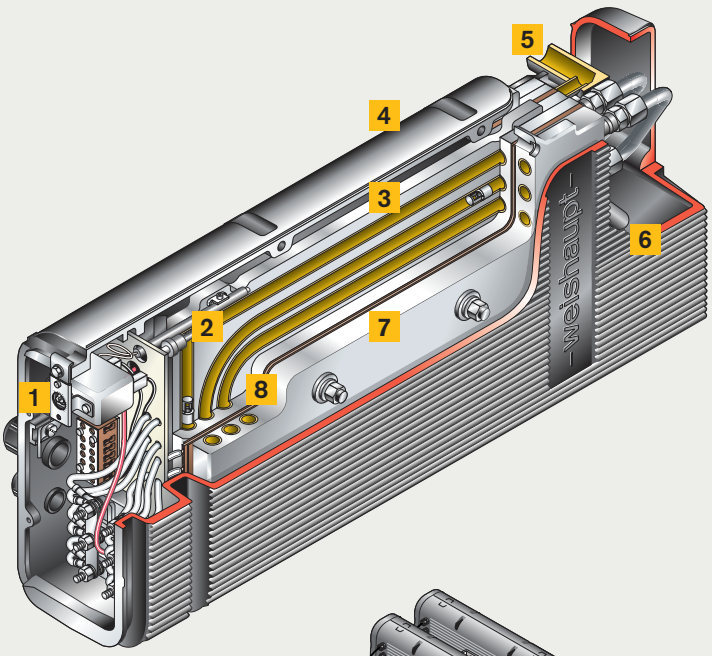

WEV2 electric oil preheater

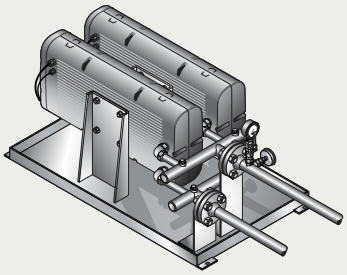

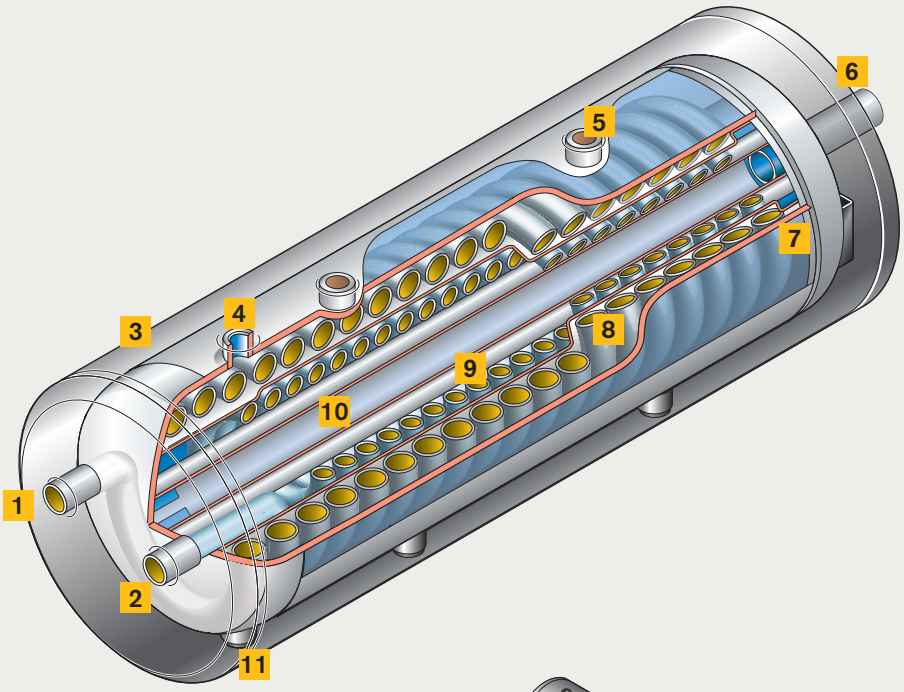

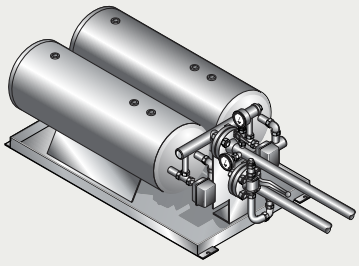

MV... medium oil preheater
as a separate preheater station

1 Outlet

2 Inlet

3 Air-insulated steel shell protection against accidental contact

4 Liquid media outlet

5 Mounting sockets

6 Medium inlet
– LTHW
– HTHW
– Thermal fluid
– Steam

7 HFO heating coil

8 Heat exchanger
– third zone

9 Heat exchanger
– second zone

10 Heat exchanger
– first zone

11 Steam outlet

Preheating temperatures above 100 °C

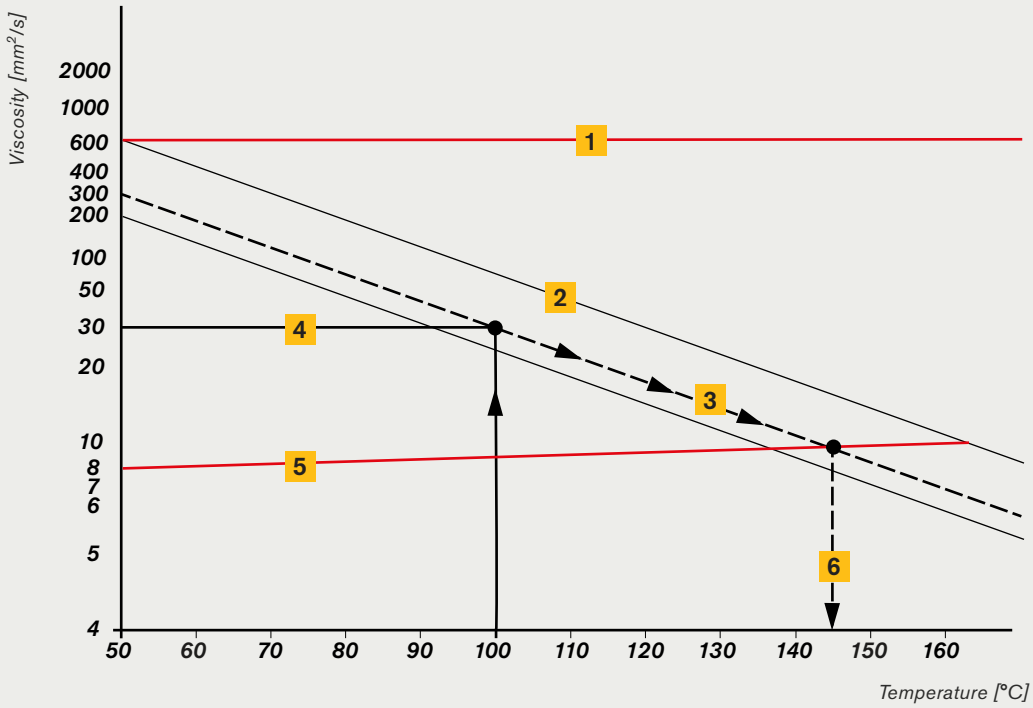

1 Max. viscosity for pump

2 Max. accidental contact protection value for heavy fuel oils S and SA per DIN 51603

3 Notional viscosity curve for the oil

4 Viscosity of the oil being used

5 Recommended nozzle viscosity

6 Preheat temperature

Viscosity/temperature chart

High-viscosity oils will always need to be preheated to temperatures in excess of 100 °C in order to reach the viscosity that is recommended for the oil nozzles.

That places many more demands on the oil supply system than a low-viscosity oil would, especially in regard to transfer.

HFO is permitted to contain a very small amount of water. Unpressurised, this water vaporises at temperatures above 100 °C. This causes pressure fluctuations which can have a detrimental effect on the burner's operational reliability.

In extreme cases, a ring main pressure of at least 5 bar has a preheating temperature of 160 °C. Given this, maximum operational reliability and safety for the burner can only be achieved when the correct oil-side components are also supplied.

Weishaupt's wide range of accessories includes oil supply components that can meet these temperature and pressure demands.

Weishaupt, who offer a one-stop solution with competent advice and all of the necessary equipment, are best-placed to meet this goal.



Oil circulation unit with oil meter

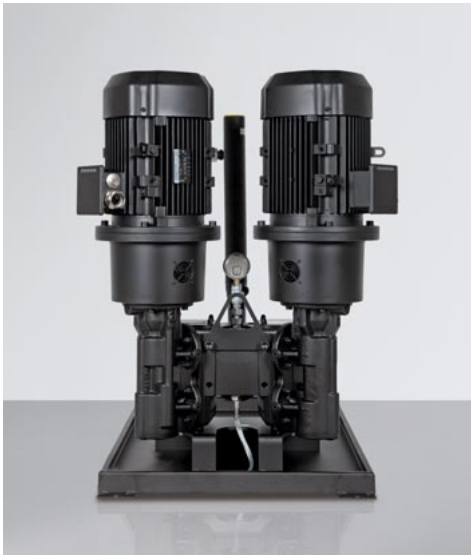

Twin-pump assembly



Air/gas separator

Options
for more flexibility.

The best products can be made even better if they are equipped with the right options.

Sliding-two-stage burners can be equipped with a **load controller** in order to benefit from the advantages of modulating operation. It is integrated into the cover over the burner's electronics and is supplied fitted and wired. The load controller is preconfigured at the factory and adapts to the behaviour of the system automatically.

In addition to a contactor, the burner motor's **large electrical junction box** can also be equipped, if required, with electronic over-current protection.

All industrial burners have options available to improve their efficiency, emissions, and safety. Equipping a burner with **VSD** (variable speed drive) will considerably reduce both its electrical consumption and noise emissions at partial load.

O_2 trim and CO control increase a system's safety and efficiency. A temperature sensor in the flue gas system will indicate that a limit value has been exceeded, which points to a fouling of the heat generator.

The **length of combustion head** required is determined by criteria such as the mounting depth of the burner, the boiler design, or the technical application. The burner's standard-length combustion head can be extended by 100, 150, 200, or 300 mm, covering the majority of requirements. Of course, longer extensions are possible upon request.

If high combustion chamber temperatures would otherwise radiate back through the burner while the plant is not operating, the burner fan will be set up to run continuously. During this time, an **electromagnetic clutch** is used to decouple the oil pump, which is driven by the fan axle. This has the advantage of keeping the pump cool and reducing wear. Additionally, the electrical power consumption of the burner motor is reduced during this continuously running fan phase.

In many applications, it is not always possible to guarantee that the combustion air being supplied to the burner will be clean and free of pollutants. For situations such as these, Weishaupt can equip the WM burners with an **air inlet flange**. By connecting a ducted extraneous air supply to this inlet flange, it is possible to draw combustion air from a "clean" and temperature-controlled zone.

The air inlet flange comes as standard with an additional air pressure switch that protects against low inlet pressure and ensures the burner is supplied with a sufficient volume of air at all times.

The W-FM 100 and W-FM 200 combustion manager's **CAN bus system** enables them to be installed either onboard the burner or, optionally, inside a separate control panel. This allows for an optimal adaptation to the operating conditions of the plant.

Integral KS20 load controller

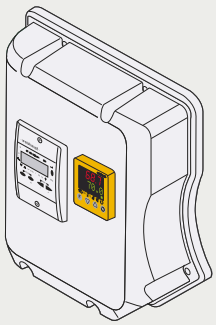

Monitoring and control of flue gases for O_2, CO and temperature

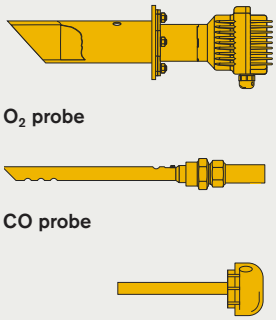

O_2 probe

CO probe

Temperature sensor

Motor junction box with contactor and optional electronic overcurrent protection

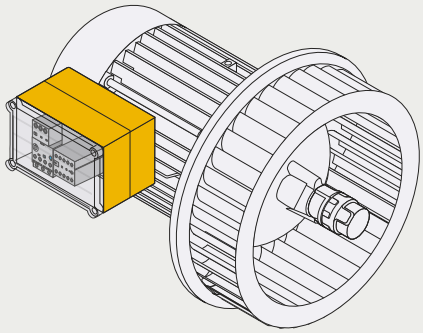

Motor-mounted frequency convertor for VSD

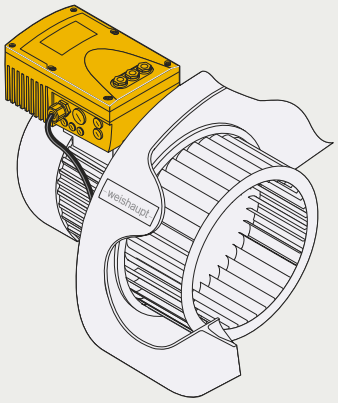

Combustion air ducted from clean areas

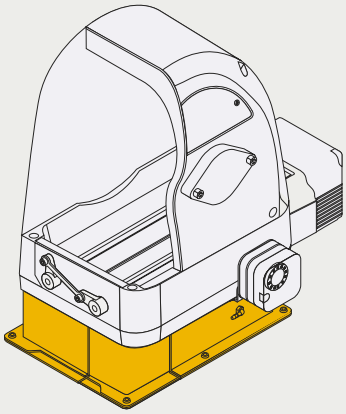

Combustion head extension for matching to the boiler door / insulation

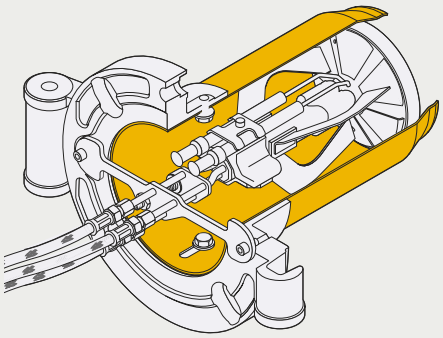

Electromagnetic clutch for oil-firing burners with continuously running fan

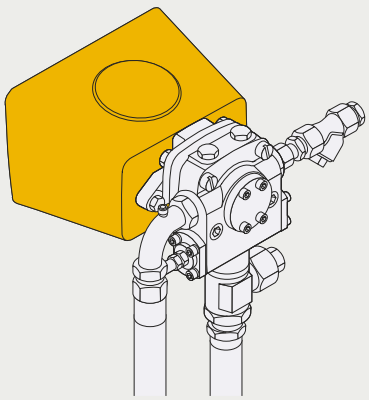

Panel-mounted W-FM 100 or W-FM 200 combustion manager

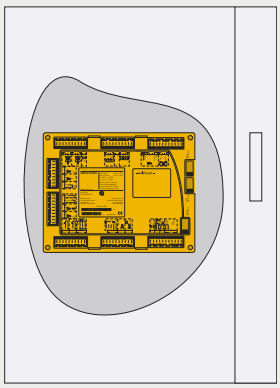

Burner-mounted W-FM 100 or W-FM 200 combustion manager

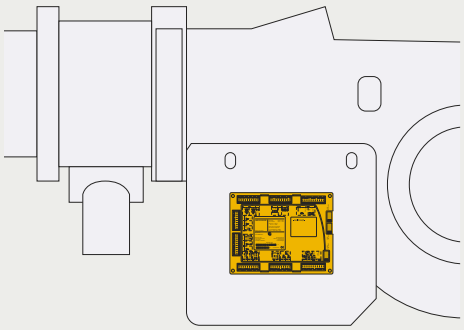

Reliable and safe.

Digital combustion management means optimal combustion figures, continuously reproducible setpoints, and ease of use.

Weishaupt WM 10–30-series oil and dual-fuel burners are equipped as standard with electronic compound regulation and digital combustion management. Today's modern combustion technologies demand a precise and continually reproducible dosing of fuel and combustion air. This is the only way to ensure optimal combustion figures over a long period of time.

Simple operation

Setting and control of the burner is achieved using the burner's control and display unit. The W-FM 50 combustion manager has a language-neutral control and display unit that is easy to understand and enables all of the data set on the combustion manager to be saved, changed, and printed.

The key benefits

- Digital combustion management makes burner operation simple and reliable
- No additional burner controls are necessary as control is effected by the combustion manager
- Commissioning and servicing takes less time. Servicing software or the combustion manager's menu-driven commissioning program is used to run through final site-specific adjustments and the combustion emission checks

General system overview Digital combustion management	W-FM 50	W-FM 100	W-FM 200	W-FM 1000 CMS
Single-fuel operation	●	●	●	●
Dual-fuel operation	–	●	●	●
Combustion manager for intermittent firing	●	●	●	●
Combustion manager for continuous firing >24 h	●[2)]	●	●	●
Flame sensor for intermittent firing	ION/QRA2/QRB	ION/QRI/QRB/QRA	ION/QRI/QRB/QRA	ION/FFS08/FFS07
Flame sensor for continuous firing > 24 h	ION	ION/QRI/QRA 73	ION/QRI/QRA 73	ION/FFS08/FFS07
Max. number of actuators in electronic compound	2	4	6	8
VSD available	●	–	●	●
O_2 trim available	–	–	●	●
Gas valve proving	●	●	●	●
4-20 mA input signal	●	○	●	●
Self-regulating PID controller for temperature or pressure	○	○	●	○
Language-neutral control and display unit	●	–	–	–
Clear text control and display unit	–	●	●	–
Control and display unit with colour graphical display	–	–	–	●
Removable control unit (max. distance)	20 m	100 m	100 m	100 m
Fuel consumption meter (switchable)	●[1)]	–	●	●
Combustion efficiency display	–	–	●	●
eBUS / Modbus interface	●	●	●	○/●
PC-supported commissioning	●	●	●	●

Please enquire regarding connections available for additional functions, e.g. flue gas dampers, oil shutoff assemblies, etc.

● Standard
○ Optional

[1)] Not in conjunction with VSD
[2)] Gas burners with ionisation probes only

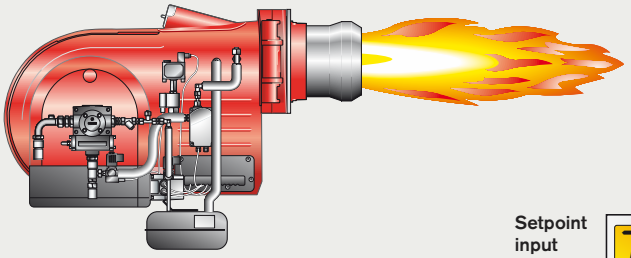

Burner with digital combustion management

Setpoint input

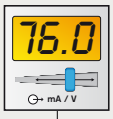



O_2 probe



Temperature sensor



CO probe



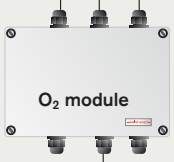

M

Burner motor

Speed sensor



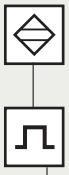

Regulating sleeve (air)

Gas feed

Air feed

Oil feed

Frequency convertor for VSD

Integral load controller

Pulse input for fuel metering

Autonomous CO monitoring (without O_2 module)

CAN bus

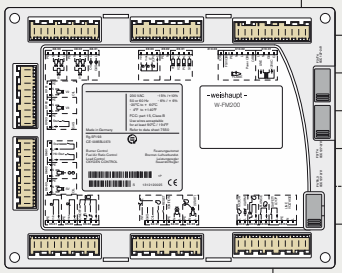

W-FM 200 combustion manager

Control and display unit on burner or in control panel

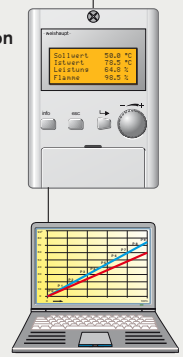

ACS 450 servicing software



Temperature or pressure sensor

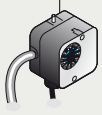

Air pressure switch



Gas pressure switch

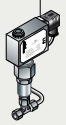

Oil pressure switch

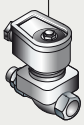

Oil valve



QRI flame sensor

Integration with building management.

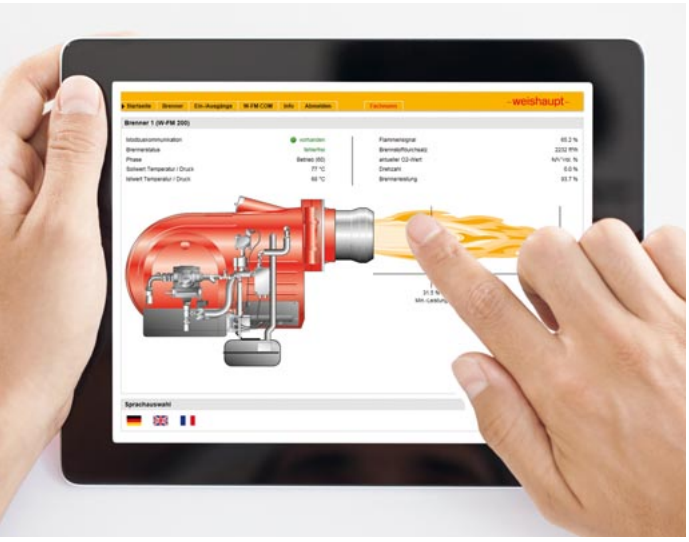

Remote monitoring made easy via tablet or laptop

Digital combustion managers provide the basis for burner communications with other, higher-level systems. The eBus and Modbus protocols are available through coupling components.

All of the usual burner and, optionally, boiler functions can be monitored and controlled through a direct, digital connection to a building management system.

A graphical HMI is available to provide a user-friendly overview of the system with its setpoints and measured values. The touch-screen display allows specific functions to be adjusted and monitored, such as the system parameters and the setpoints of individual and multi-boiler plant and other ancillary equipment.

Controls specialists, Neuberger, are a part of the Weishaupt Group and they are able to design and implement complex control solutions.

Additional optional components enable connections to be made to systems using commonplace industrial standards, such as:

- Modbus TCP/IP
- Profinet I/O
- Modbus RTU
- BacNet
- etc.

Also available in Weishaupt's product range is the W-FM COM communications module. This transmits data securely over the internet so that it can be called up and displayed in a browser window on a PC, tablet, or smart-phone, which facilitates accurate service planning for example. Even away from the internet you can be kept up to date with the operation of the burner: In the event of a safety shutdown or some other predefined trigger, an SMS text message will be sent automatically.

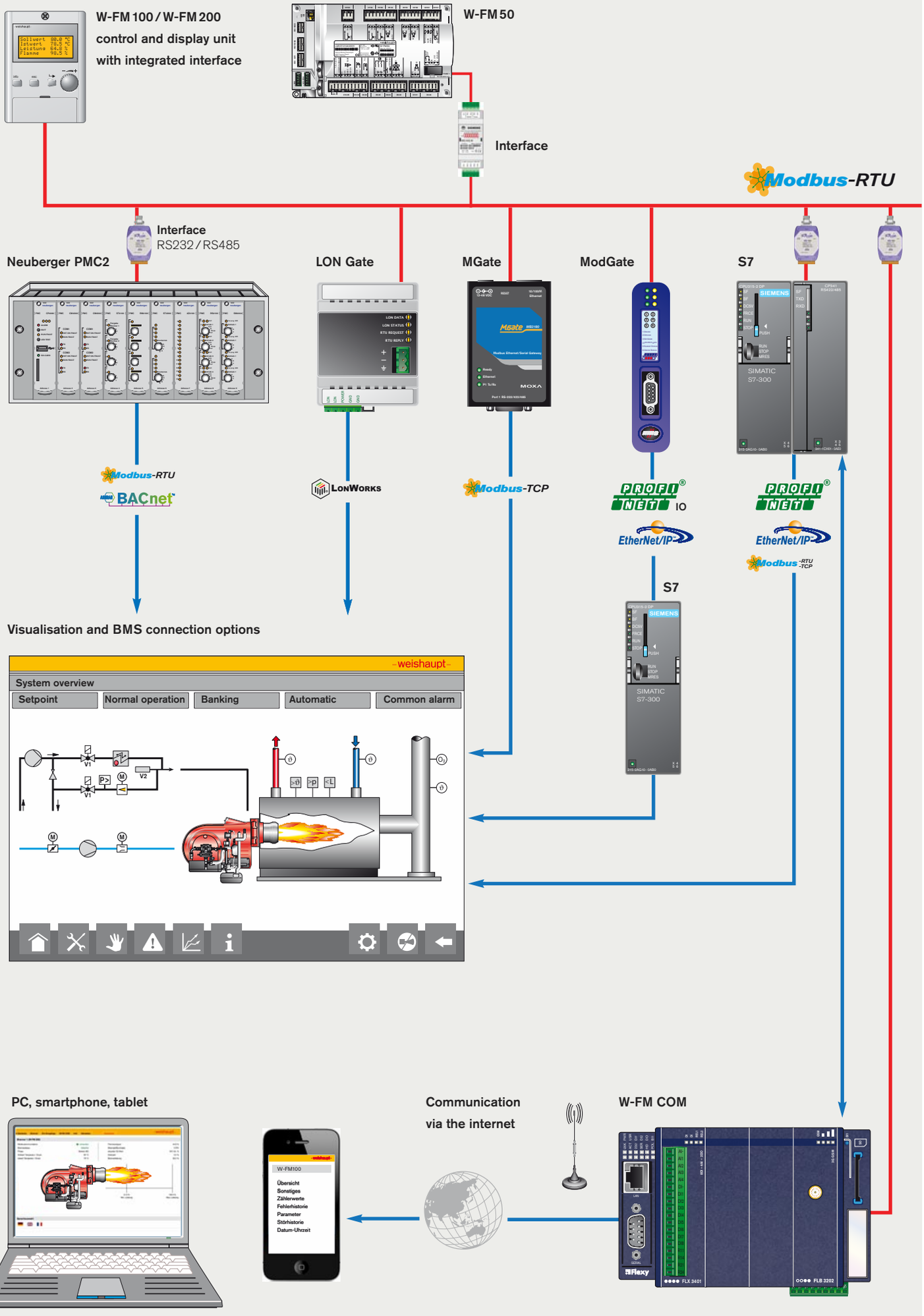

ПРОМЭЛЕКТРОНИКА / sales@prom-elec.com

Load control
Model designation
WM-S10–30
WM-GS20–30

Two-stage (Z) with low-impact start

- The burner is driven, via a two-point signal (e.g. thermostat or pressure control) to full or partial load in response to heat demand. The burner undergoes a low-impact start with nozzle 1.

Two-stage

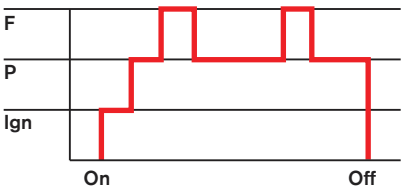

Three-stage (T)

- The burner is driven, via a two-point signal (e.g. thermostat or pressure control) to full, intermediate, or partial load in response to heat demand. Two-stage load control with low-impact start or low-impact changeover is also possible.

Three-stage

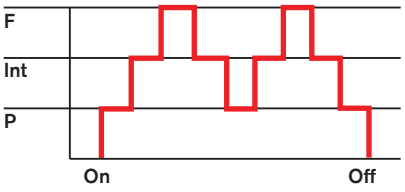

Sliding-two-stage (ZM)

- The burner is driven, via a two-point signal (e.g. thermostat or pressure control) to full or partial load in response to heat demand. Combustion remains CO and soot-free between load points.

Sliding-two-stage

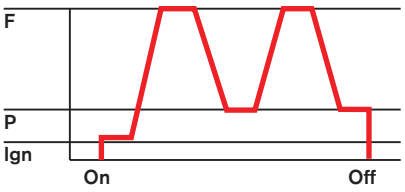

Modulating (ZM)

- An electronic controller makes infinitely variable load adjustments in response to heat demand.
- Available modulating executions:
  – W-FM 100 with optional load controller
  – W-FM 200 with standard load controller
- Alternatively, a controller can be mounted in the cover over the burner's integral electronic controls or in a separate control panel.

Modulating

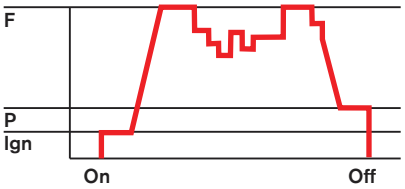

F = *Full load (nominal load)*
Int = *Intermediate load*
P = *Partial load (min. load)*
Ign = *Ignition load*

Model designation

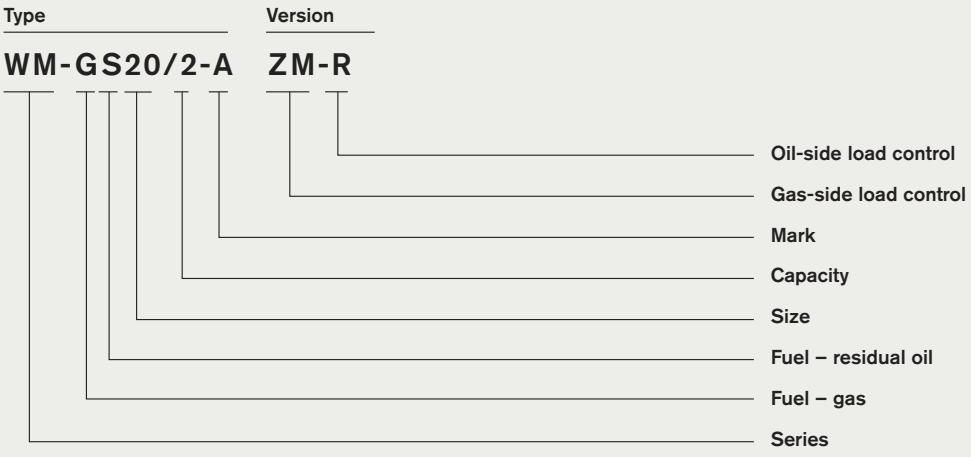

Details	Code	Meaning	Associated fuel
Series	**WM**	**Weishaupt monarch® burner**	
Fuel *	**G** **S**	**Gas** **Class E / F / G / H oil**	
Load control *	**ZM** **Z** **T** **R**	**Sliding-two-stage / modulating** **Two-stage** **Three-stage** **Sliding-two-stage / modulating**	**Gas** **Oil** **Oil** **Oil**

**) Dual-fuel burners use a combination of codes (GS, ZM-T, ZM-R).*

Operating ranges
WM-S10–30
WM-GS20–30

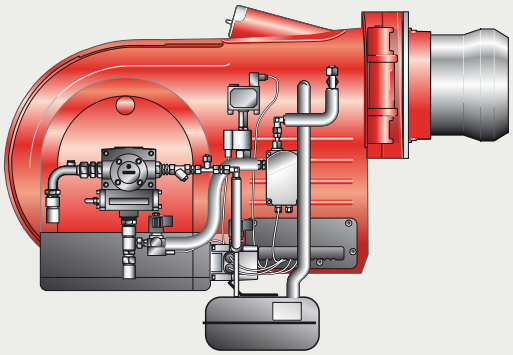

Model	Rating (kW)
WM-S10	**100 - 1120**
Oil burners, versions Z and T	
WM-S10/1-A Z	100 - 450
WM-S10/2-A Z	175 - 700
WM-S10/3-A T	230 - 880
WM-S10/4-A T	300 - 1120

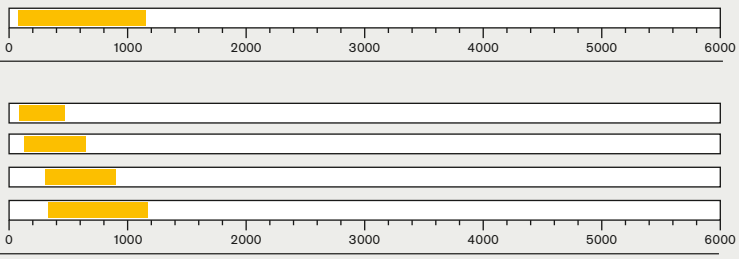

Model	Rating (kW)
WM-S20	**450 - 2450**
Oil burners, versions T and R	
WM-S20/2-A T and R	450 - 2000
WM-S20/3-A T and R	700 - 2450

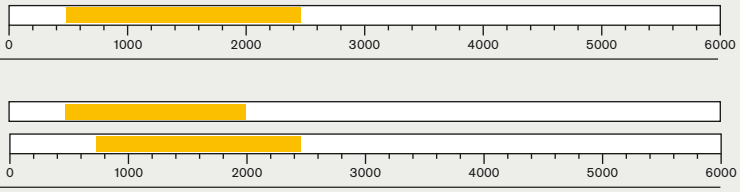

Model	Rating (kW)
WM-S30	**750 - 5400**
Oil burners, version R	
WM-S30/1-A R	750 - 2800
WM-S30/2-A R	900 - 3700
WM-S30/3-A R	1100 - 5400

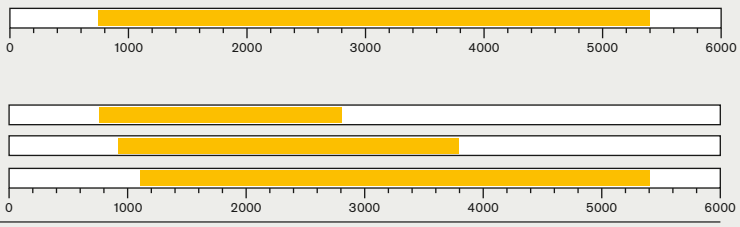

Model	Rating (kW)	
WM-GS20	**150 - 2200**	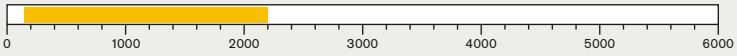
Dual-fuel burners, version ZM-R		
WM-GS20/2-A ZM-R	150 - 1700	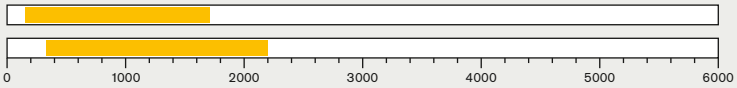
WM-GS20/3-A ZM-R	250 - 2200	

Model	Rating (kW)	
WM-GS30	**350 - 5600**	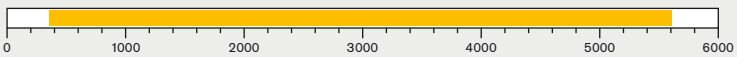
Dual-fuel burners, version ZM-R		
WM-GS30/1-A ZM-R	350 - 3100	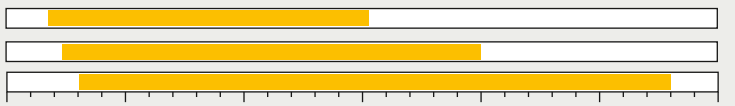
WM-GS30/2-A ZM-R	450 - 4000	
WM-GS30/3-A ZM-R	600 - 5600	

Scope of delivery
WM-S10–30
WM-GS20–30

Standard version

Fuel Version		Oil Z / T / R	Dual-fuel ZM-R
Burner housing, hinged flange, housing cover, Weishaupt burner motor, air inlet housing, fan wheel, combustion head, ignition unit, ignition cable, ignition electrodes, combustion manager with control unit, flame sensor, actuators, flange gasket, limit switch on hinged flange, fixing screws		●	●
Digital combustion management	W-FM 50 W-FM 100	● ○ / ○ [1] / ○	– ●
Class-A double gas valve assembly with valve proving effected via W-FM and pressure switch		–	●
Gas butterfly valve		–	●
Air pressure switch (required for PED compliance)		○	●
Low gas pressure switch		–	●
Preset, capacity-based mixing assembly		●	●

EN 676 stipulates that ball valves, gas filters, and gas pressure regulators form part of the burner supply (see Weishaupt accessories list). Please enquire or see the extra-equipment section of this brochure for further burner executions.

● Standard
○ Optional
– Not available

[1] WM-S10 only

Standard version

Fuel Version		Oil Z / T / R	Dual-fuel ZM-R
Actuators for compound regulation of fuel and air via W-FM:			
Air damper actuator		●	●
Gas butterfly valve actuator		–	●
Oil regulator actuator		– / – / ●	●
Oil pressure switch in return		– / – / ●	●
Burner-mounted oil pump		●	●
Oil hoses		●	●
Compact solenoid valve block with multi-stage oil-circulating nozzle assembly and pre-installed nozzles		● / ● / –	–
2 oil solenoid valves, oil regulator, nozzle head with solenoid valve„ pre-installed regulating nozzle, and safety shutoff		– / – / ●	●
Electric preheater	type EV... [4]	●	●
	type WEV... [3]	– / – / ●	●
Insulated oil lines on burner		●	●
Electromagnetic clutch		○	●
Motor-mounted star-delta combination [3]		– / – / ●	●
Motor-mounted DOL contactor [4]		●	●
IP 40 protection		●	●

EN 676 stipulates that ball valves, gas filters, and gas pressure regulators form part of the burner supply (see Weishaupt accessories list). Please enquire or see the extra-equipment section of this brochure for further burner executions.

● Standard
○ Optional
– Not available

[3] WM 30 only
[4] WM 10 / 20 only

Extra equipment
WM-S10–30
WM-GS20–30

Fuel Version		Oil Z / T / R	Dual-fuel ZM-R
Combustion head extension	by 100 mm [4]	○ / ○ / ○	○
	by 150 mm [3]	– / – / ○	○
	by 200 mm [4]	– / ○ / ○	○
	by 300 mm [3]	– / – / ○	○
W-FM 100 in lieu of W-FM 50	inbuilt	○	–
	loose	○	–
W-FM 100 loose in lieu of inbuilt		–	○
Analogue signal convertor with load controller for W-FM 100		○	○
W-FM 200 in lieu of W-FM 50 / 100 with load controller, analogue signal convertor, VSD module, and optional connection of fuel meter			
	inbuilt	○	○
	loose	○	○
W-FM 1000 CMS in lieu of W-FM 50 / 100 with colour graphical display (multi-lingual), and optional integration of customer-specific open and closed-loop control processes		○	○
KS20 controller mounted in the burner – W-FM 50		○	–
ABE with Chinese and English-langauge display, supplied loose W-FM 100 / W-FM 200		○	○
VSD with motor-mounted frequency convertor W-FM 50 / 200 / 1000 CMS		○	○
with separate frequency convertor, FC as accessory equipment W-FM 200 / 1000 CMS		○	○
SQM148 oil regulator actuator 35 Nm (W-FM 100 / 200)		– / – / ○	○
DSB158 low oil pressure switch in supply (W-FM 100 / 200)		○	○
Oil pressure gauge with ball valve, pump-mounted		○	○
with ball valve, in return		– / – / ○	○
Vacuum pressure gauge -1 to+9 bar with ball valve, in supply		○	○

○ Optional
– Not available

[3] WM 30 only
[4] WM 10 / 20 only

Fuel **Version**		**Oil** **Z / T / R**	**Dual-fuel** **ZM-R**
Trace heating of burner oil lines between pump and solenoid valve		O	O
Oil preheater mounted on side of burner [4]		O	O
Oil preheater			
	EV2C in lieu of EV2D [2]	– / O / O	O
	WEV 3.1/01 in lieu of WEV 2.2/01 [3]	– / – / O	O
	WEV 3/01 in lieu of WEV 2.2/01 [3]	– / – / O	O
Oil pump (hardened version)			
	PON	O / O / –	–
	UHE	– / – / O	O
Heating for PON oil pump		O / O / –	–
Oil hoses			
	1300 mm in lieu of 1000 mm	O / O / O	O
	1300 mm heated	O / O / O	O
	1500 mm in lieu of 1000 / 1300 mm heated	– / – / O	O
Air inlet flange for ducted-air connection with LGW air pressure switch (additional LGW50 required)		O	O
Motor with star-delta combination and over-current protection [3]		– / – / O	O
with 230 V contactor and over-current protection [4]		O	O
Special voltages (please enquire)		O	O
Control voltage 110 V		O	O
Control voltage 24 V with W-FM 1000 CMS		O	O
Solenoid valve for air pressure switch test with continuously running fan or post-purge		O	O
High gas pressure switch for screwed W-MF / DMV with low-pressure supplies		–	O
for flanged DMV / VGD with low-pressure supplies		–	O
for fitting to regulator with high-pressure supplies		–	O

O Optional
– Not available

[2] WM 20 only
[3] WM 30 only
[4] WM 10 / 20 only

Dimensions
WM-S10
Z and T versions

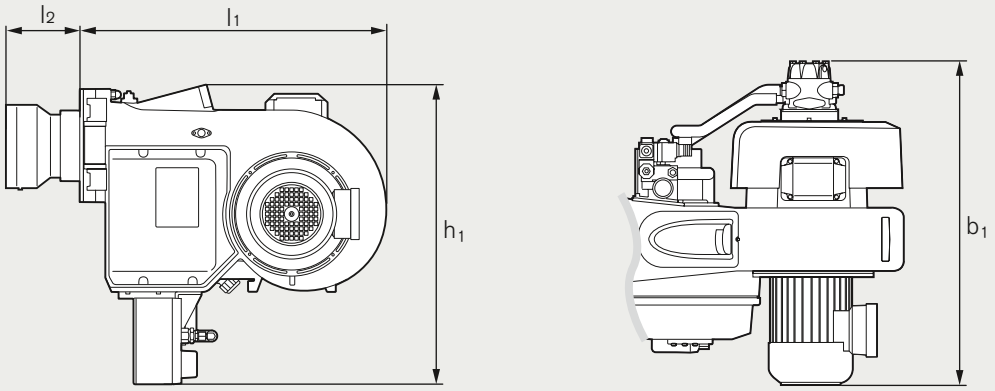

Dimensions – Z and T versions with underslung oil preheater (standard)

Dimension	Oil Z/T
l1 - Burner length excluding combustion head	659
l2 - Combustion head length	118–158
h1 - Overall burner height	645
b1 - Overall burner width	688–716

Mounting plate drilling dimensions

Dimension	Version Z/T
d4 - Inner diameter	165/185
d5 - Outer diameter	186/210

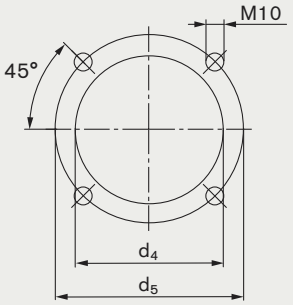

Dimensions in mm

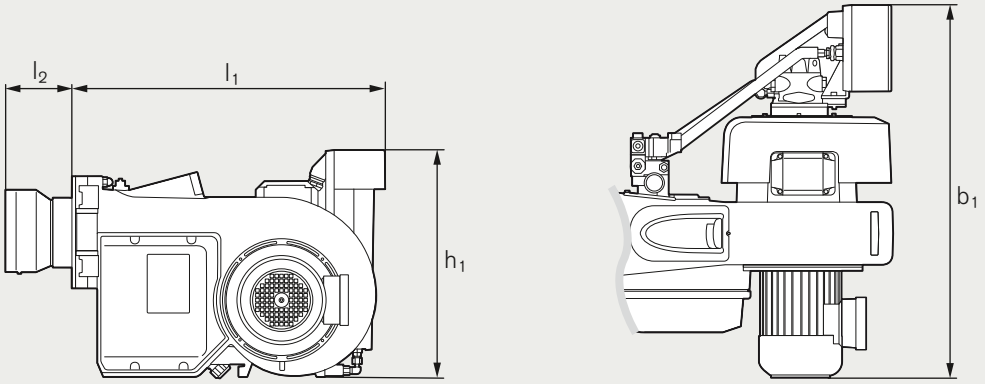

Dimensions – Z and T versions with side-mounted oil preheater (optional)

Dimension	Oil Z/T
l1 - Burner length excluding combustion head	659
l2 - Combustion head length	118–158
h1 - Overall burner height	489
b1 - Overall burner width	802–830

Dimensions in mm

Dimensions
WM-S20
WM-GS20
T, R, and ZM-R versions

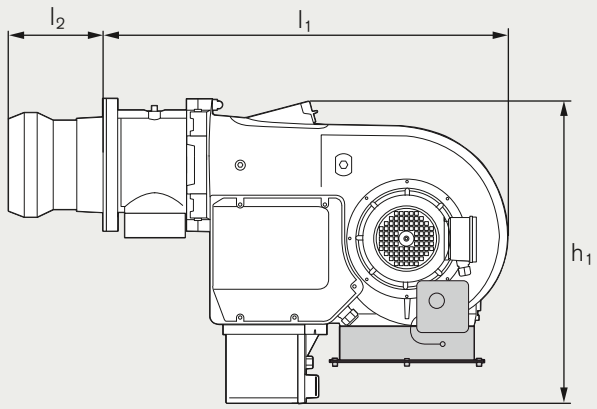

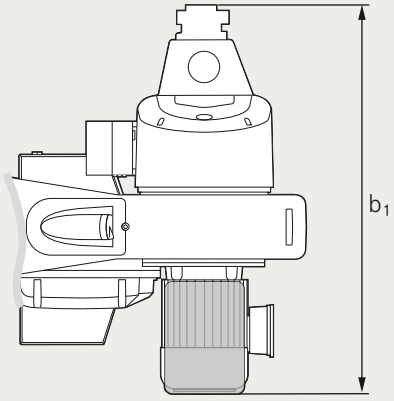

Dimensions – T, R, and ZM-R versions

Dimension	Oil T / R	Dual-fuel ZM-R
l1 - Burner length excluding combustion head	810	1010
l2 - Combustion head length	226–256	231–266
h1 - Overall burner height	757	757
b1 - Overall burner width	833–878	969–1009

Mounting plate drilling dimensions

Dimension	Version T / R / ZM-R
d4 - Inner diameter	270
d5 - Outer diameter	298

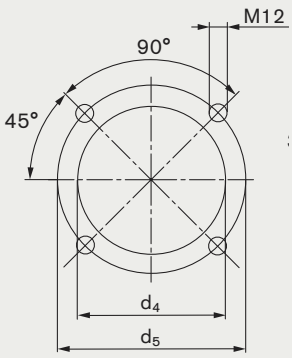

Dimensions in mm

Dimensions
WM-S30
WM-GS30
R and ZM-R versions

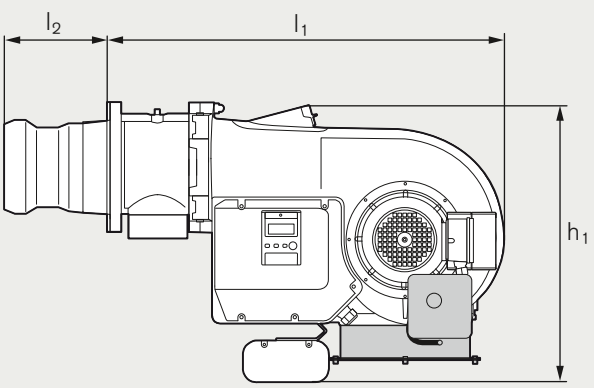

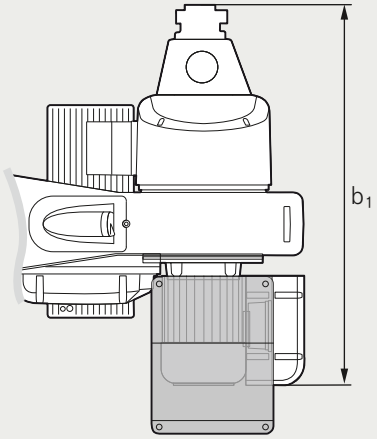

Dimensions – R and ZM-R versions

Dimension	Oil R	Dual-fuel ZM-R
l1 - Burner length excluding combustion head	941 - 956	1146 - 1166
l2 - Combustion head length	285 - 326	349 - 389
h1 - Overall burner height	873 - 890	873 - 890
b1 - Overall burner width	992 - 1042	1123 - 1173

Mounting plate drilling dimensions

Dimension	Sizes 30/1 and 30/2	Size 30/3
d4 - Inner diameter	305	375
d5 - Outer diameter	330	400

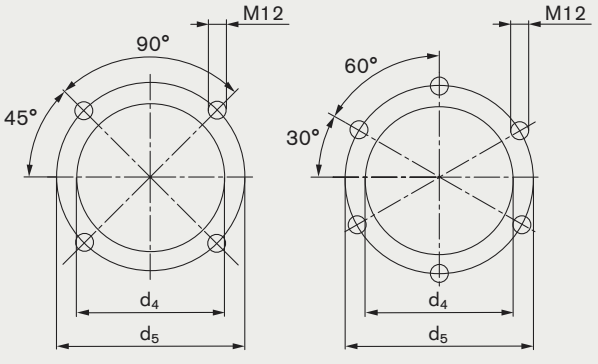

WM30/1 and WM30/2 **WM30/3**

Dimensions in mm

–weishaupt–

If you need us, we're there.

Weishaupt (UK) Ltd
Neachells Lane, Willenhall, WV13 3RG
Tel. (01902) 609841

info@weishaupt.co.uk
www.weishaupt.co.uk

*Print No. 83**212**102, May 2023*
We reserve the right to make amendments.
Reprinting prohibited.

Some illustrations depict optional extras that are available at additional cost.

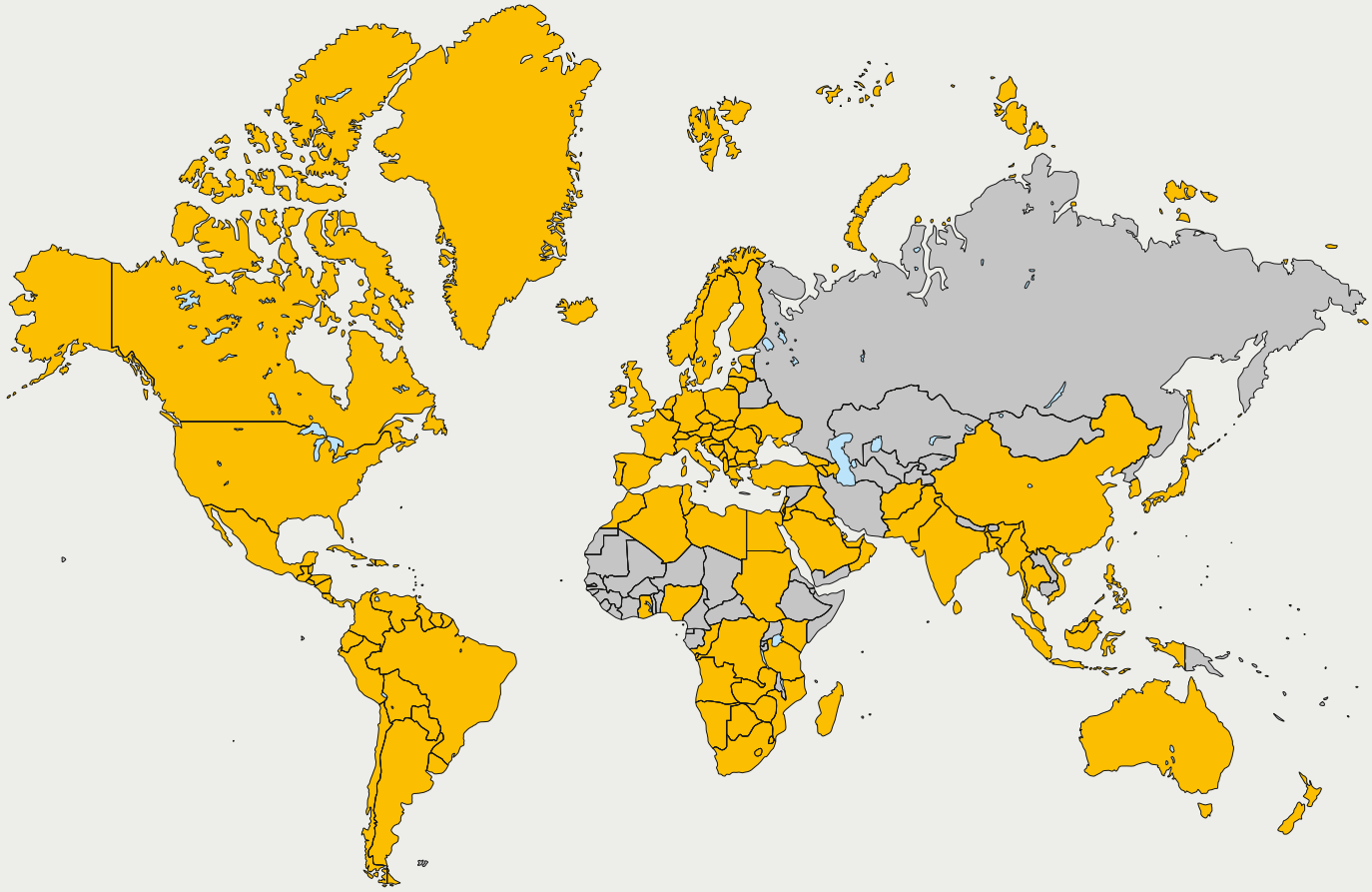

Weishaupt worldwide:

Afghanistan
Algeria
Angola
Argentina
Australia
Austria
Bahrain
Bangladesh
Belgium
Belize
Bolivia
Bosnia-Herzegovina
Botswana
Brazil
Bulgaria
Canada
Chile
China
Columbia
Congo (D. Rep.)
Congo (Rep.)
Costa Rica
Croatia
Cuba
Cyprus
Czechia
Denmark
Dominican Rep.
Ecuador
Egypt
El Salvador
Estonia
Eswatini
Faroe Islands
Finland
France
French Guiana
Germany
Ghana
Greece
Greenland
Guatemala
Guyana
Haiti
Honduras
Hungary
India
Indonesia
Iraq
Ireland
Israel
Italy
Jamaica
Japan
Jordan
Kenya
Korea (S.)
Kosovo
Kuwait
Latvia
Lebanon
Lesotho
Libya
Liechtenstein
Lithuania
Luxembourg
Madagascar
Malaysia
Malta
Mauritius
Mexico
Moldova
Monaco
Montenegro
Morocco
Mozambique
Myanmar
Namibia
Netherlands
New Zealand
Nicaragua
Nigeria
North Macedonia
Norway
Oman
Pakistan
Panama
Paraguay
Peru
Philippines
Poland
Portugal
Puerto Rico
Qatar
Romania
San Marino
Saudi Arabia
Serbia
Singapore
Slovakia
Slovenia
South Africa
Spain
Sri Lanka
Sudan
Suriname
Sweden
Switzerland
Taiwan
Tanzania
Thailand
Tunisia
Turkey
UAE
Ukraine
United Kingdom
Uruguay
USA
Vatican City
Venezuela
Vietnam
Zambia
Zimbabwe