GB

Forced draught gas burner

One-stage operation



CODE	MODEL	TYPE
3756506	RIELLO 40 FS3	565 M

20063642 (3) -01/2017

ПРОМЭЛЕКТРОНИКА / sales@prom-elec.com



Translation of the original instructions

1 Declarations ... 3

2 Information and general warnings ... 4
2.1 Information about the instruction manual ... 4
2.1.1 Introduction ... 4
2.1.2 General dangers ... 4
2.1.3 Other symbols ... 4
2.1.4 Delivery of the system and the instruction manual ... 5
2.2 Guarantee and responsibility ... 5

3 Safety and prevention ... 6
3.1 Introduction ... 6
3.2 Personnel training ... 6

4 Technical description of the burner ... 7
4.1 Burner designation ... 7
4.2 Models available ... 7
4.3 Burner categories - Countries of destination ... 7
4.4 Technical data ... 8
4.5 Maximum dimensions ... 8
4.6 Firing rate ... 9
4.6.1 Test boiler ... 9
4.6.2 Commercial boilers ... 9
4.7 Correlation between gas pressure and burner output ... 9
4.8 Burner description ... 10
4.9 Burner equipment ... 10
4.10 Electrical control box ... 11

5 Installation ... 12
5.1 Notes on safety for the installation ... 12
5.2 Instructions to avoid burnout or bad combustion of the burner ... 12
5.3 Handling ... 12
5.4 Preliminary checks ... 13
5.4.1 Control of the supply ... 13
5.4.2 Control of burner characteristics ... 13
5.5 Operating position ... 13
5.6 Securing the burner to the boiler ... 14
5.7 Combustion head adjustment ... 14
5.8 Positioning the probe - electrode ... 15
5.9 Gas feeding ... 15
5.9.1 Gas feeding line ... 15
5.9.2 Gas train ... 16
5.9.3 Gas train installation ... 16
5.10 Electrical wiring ... 17
5.10.1 Notes on safety for the electrical wiring ... 17
5.10.2 Control box ... 17
5.10.3 Electrical diagram ... 18
5.10.4 Ionisation current ... 18

6 Start-up, calibration and operation of the burner ... 19
6.1 Notes on safety for the first start-up ... 19
6.2 Adjustments prior to ignition ... 19
6.3 Combustion adjustment ... 19
6.4 Air pressure switch ... 19
6.5 Operation sequence of the burner ... 20
6.5.1 Regular operation ... 20
6.5.2 Lockout due to ignition failure ... 21
6.5.3 Lockout due to a flame or flame simulation detected during pre-purging ... 21
6.5.4 Lockout types and triggering times in case of burner malfunction ... 22
6.6 Control box reset ... 22
6.6.1 Reset using built-in button ... 22
6.6.2 Reset using remote connection ... 22
6.6.3 Colour code of the control box reset button LED ... 22
6.7 Recycle function (in the event of flame disappearance during operation) ... 22
6.8 Logging of burner operating parameters ... 22

6.9 Additional, programmable control box functions 23
6.9.1 Post-purging function (t6) 23
6.9.2 Continuous purging function (only for applications in which this is provided for) 23
6.9.3 Function setting procedure using the reset button 23
6.10 Visual diagnostics of the control box 23

7 Maintenance 25
7.1 Notes on safety for the maintenance 25
7.2 Maintenance programme 25
7.2.1 Maintenance frequency 25
7.2.2 Checking and cleaning 25
7.3 Opening the burner 26

8 Faults - Possible causes - Solutions 27
8.1 Start-up problems 27
8.2 Operating faults 28

A Appendix - Accessories 29

1 Declarations

Declaration of conformity in accordance with ISO / IEC 17050-1		
Manufacturer:	RIELLO S.p.A.	
Address:	Via Pilade Riello, 7 37045 Legnago (VR)	
Product:	Forced draught gas burner	
Model:	RIELLO 40 FS3	
These products are in compliance with the following Technical Standards:		
EN 676		
EN 12100		
and according to the European Directives:		
GAD	2009/142/EC	Gas Devices Directive
MD	2006/42/EC	Machine Directive
LVD	2014/35/UE	Low Voltage Directive
EMC	2014/30/UE	Electromagnetic Compatibility
Such products are marked as follows:		
CE	EC-0694CN7805	

The quality is guaranteed by a quality and management system certified in accordance with ISO 9001:2015.

Legnago, 01.12.2015

Executive General Manager
RIELLO S.p.A. - Burner Department
Mr. U. Ferretti

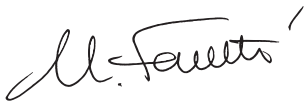

Research & Development Director
RIELLO S.p.A. - Burner Department
Mr. F. Comencini



2 Information and general warnings

2.1 Information about the instruction manual

2.1.1 Introduction

The instruction manual supplied with the burner:

- ➤ is an integral and essential part of the product and must not be separated from it; it must therefore be kept carefully for any necessary consultation and must accompany the burner even if it is transferred to another owner or user, or to another system. If the manual is lost or damaged, another copy must be requested from the Technical Assistance Service of the area;
- ➤ is designed for use by qualified personnel;
- ➤ offers important indications and instructions relating to the installation safety, start-up, use and maintenance of the burner.

Symbols used in the manual

In some parts of the manual you will see triangular DANGER signs. Pay great attention to these, as they indicate a situation of potential danger.

2.1.2 General dangers

The **dangers** can be of **3 levels**, as indicated below.



Maximum danger level!
This symbol indicates operations which, if not carried out correctly, cause serious injury, death or long-term health risks.



This symbol indicates operations which, if not carried out correctly, may cause serious injury, death or long-term health risks.



This symbol indicates operations which, if not carried out correctly, may cause damage to the machine and/or injury to people.

2.1.3 Other symbols



DANGER: LIVE COMPONENTS

This symbol indicates operations which, if not carried out correctly, lead to electric shocks with lethal consequences.



DANGER: FLAMMABLE MATERIAL

This symbol indicates the presence of flammable materials.



DANGER: BURNING

This symbol indicates the risks of burns due to high temperatures.



DANGER: CRUSHING OF LIMBS

This symbol indicates the presence of moving parts: danger of crushing of limbs.



WARNING: MOVING PARTS

This symbol indicates that you must keep limbs away from moving mechanical parts; danger of crushing.



DANGER: EXPLOSION

This symbol signals places where an explosive atmosphere may be present. An explosive atmosphere is defined as a mixture - under atmospheric conditions - of air and flammable substances in the form of gases, vapours, mist or dust in which, after ignition has occurred, combustion spreads to the entire unburned mixture.



PERSONAL PROTECTION EQUIPMENT

These symbols indicate the equipment that must be worn and kept by the operator for protection against threats against safety and/or health while at work.



OBLIGATION TO ASSEMBLE THE COVER AND ALL THE SAFETY AND PROTECTION DEVICES

This symbol signals the obligation to reassemble the cover and all the safety and protection devices of the burner after any maintenance, cleaning or checking operations.



ENVIRONMENTAL PROTECTION

This symbol gives indications for the use of the machine with respect for the environment.



IMPORTANT INFORMATION

This symbol indicates important information that you must bear in mind.

➤ This symbol indicates a list.

Abbreviations used

Ch.	Chapter
Fig.	Figure
Pag.	Page
Sec.	Section
Tab.	Table

2.1.4 Delivery of the system and the instruction manual

When the system is delivered, it is important that:

➤ the instruction manual is delivered to the user by the system manufacturer, with the recommendation to keep it in the room where the heat generator is to be installed.

➤ The instruction manual shows:
– the serial number of the burner;

.....

– the address and telephone number of the nearest Assistance Centre

.....
.....
.....

➤ The system supplier must carefully inform the user about:
– the use of the system;
– any further tests that may be required before activating the system;
– maintenance, and the need to have the system checked at least once a year by a representative of the manufacturer or another specialised technician.
To ensure a periodic check, the manufacturer recommends the drawing up of a Maintenance Contract.

2.2 Guarantee and responsibility

The manufacturer guarantees its new products from the date of installation, in accordance with the regulations in force and/or the sales contract. At the moment of the first start-up, check that the burner is integral and complete.

WARNING

Failure to observe the information given in this manual, operating negligence, incorrect installation and carrying out of non authorised modifications will result in the annulment by the manufacturer of the guarantee that it supplies with the burner.

In particular, the rights to the guarantee and the responsibility will no longer be valid, in the event of damage to things or injury to people, if such damage/injury was due to any of the following causes:

➤ incorrect installation, start-up, use and maintenance of the burner;
➤ improper, incorrect or unreasonable use of the burner;
➤ intervention of unqualified personnel;
➤ carrying out of unauthorised modifications on the equipment;
➤ use of the burner with safety devices that are faulty, incorrectly applied and/or not working;
➤ installation of untested supplementary components on the burner;
➤ powering of the burner with unsuitable fuels;
➤ faults in the fuel supply system;
➤ continuation of use of the burner when a fault has occurred;
➤ repairs and/or overhauls incorrectly carried out;
➤ modification of the combustion chamber with inserts that prevent the regular development of the structurally established flame;
➤ insufficient and inappropriate surveillance and care of those burner components most likely to be subject to wear and tear;
➤ use of non-original components, including spare parts, kits, accessories and optional;
➤ force majeure.

The manufacturer furthermore declines any and every responsibility for the failure to observe the contents of this manual.

3 Safety and prevention

3.1 Introduction

The burners have been designed and built in compliance with current regulations and directives, applying the known technical rules of safety and envisaging all the potential danger situations.

It is necessary, however, to bear in mind that the imprudent and clumsy use of the equipment may lead to situations of death risk for the user or third parties, as well as the damaging of the burner or other items. Inattention, thoughtlessness and excessive confidence often cause accidents; the same applies to tiredness and sleepiness.

It is a good idea to remember the following:

➤ The burner must only be used as expressly described. Any other use should be considered improper and therefore dangerous.

In particular:

it can be applied to boilers operating with water, steam, diathermic oil, and to other uses expressly foreseen by the manufacturer;

the type and pressure of the fuel, the voltage and frequency of the electrical power supply, the minimum and maximum deliveries for which the burner has been regulated, the pressurisation of the combustion chamber, the dimensions of the combustion chamber and the room temperature must all be within the values indicated in the instruction manual.

➤ Modification of the burner to alter its performance and destinations is not allowed.

➤ The burner must be used in exemplary technical safety conditions. Any disturbances that could compromise safety must be quickly eliminated.

➤ Opening or tampering with the burner components is not allowed, apart from the parts requiring maintenance.

➤ Only those parts envisaged by the manufacturer can be replaced.



WARNING

The manufacturer guarantees safety and proper functioning only if all burner components are intact and positioned correctly.

3.2 Personnel training

The user is the person, body or company that has acquired the machine and intends to use it for the specific purpose. He is responsible for the machine and for the training of the people working around it.

The user:

➤ undertakes to entrust the machine exclusively to suitably trained and qualified personnel;

➤ undertakes to inform his personnel in a suitable way about the application and observance of the safety instructions. With that aim, he undertakes to ensure that everyone knows the use and safety instructions for his own duties;

➤ Personnel must observe all the danger and caution indications shown on the machine.

➤ Personnel must not carry out, on their own initiative, operations or interventions that are not within their province.

➤ Personnel must inform their superiors of every problem or dangerous situation that may arise.

➤ The assembly of parts of other makes, or any modifications, can alter the characteristics of the machine and hence compromise operating safety. The manufacturer therefore declines any and every responsibility for any damage that may be caused by the use of non-original parts.

In addition:



➤ must take all the measures necessary to prevent unauthorised people gaining access to the machine;

➤ the user must inform the manufacturer if faults or malfunctioning of the accident prevention systems are noticed, along with any presumed danger situation;

➤ personnel must always use the personal protective equipment envisaged by legislation and follow the indications given in this manual.

4 Technical description of the burner

4.1 Burner designation

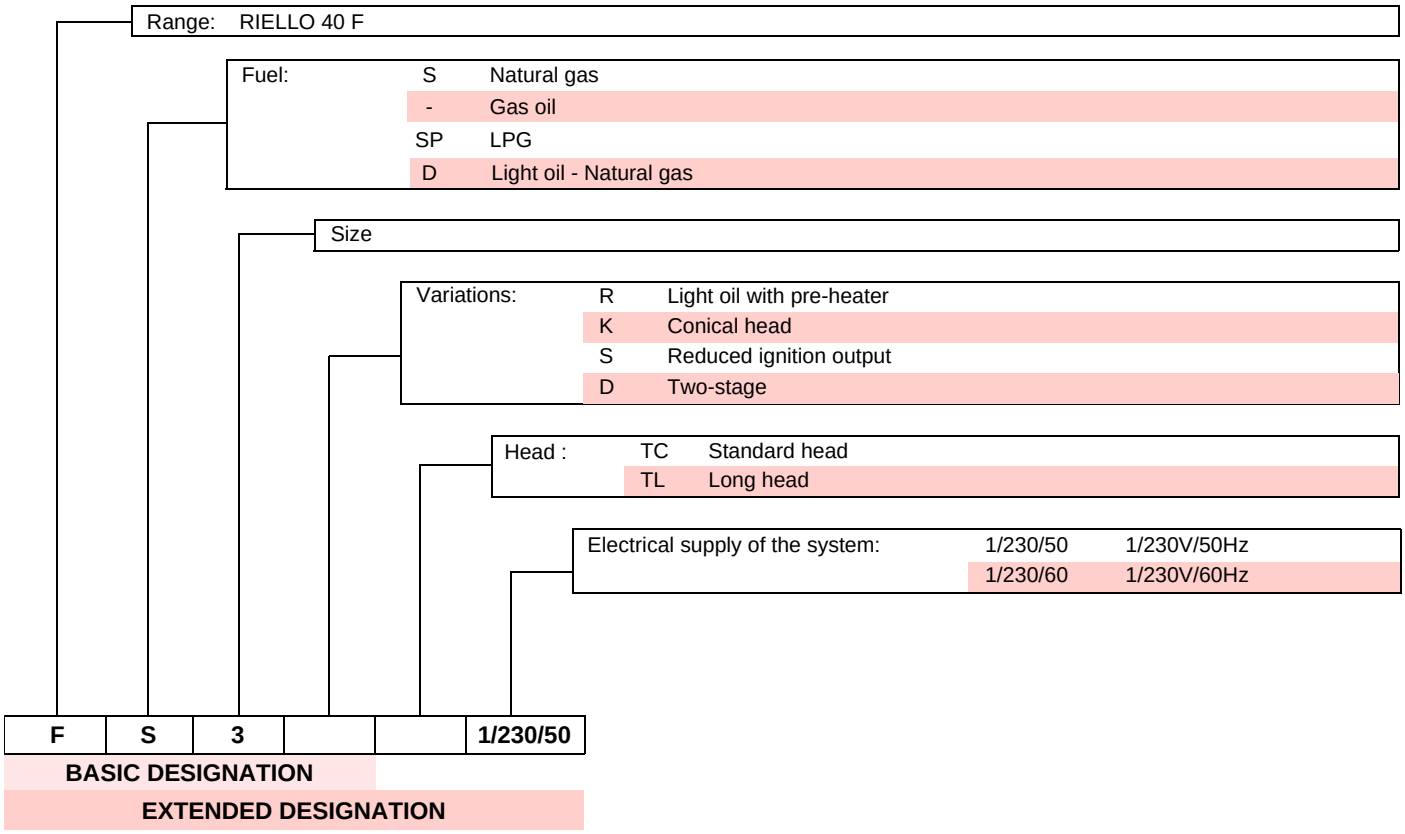

4.2 Models available

Designation	Voltage	Code
RIELLO 40 FS3	1/230/50	3756506

Tab. A

4.3 Burner categories - Countries of destination

Country of destination	Gas category
SE - FI - AT - GR - DK - ES - GB - IT - IE - PT - IS - CH - NO	I_{2H}
DE	I_{2ELL}
NL	I_{2L} - I_{2E} - I_2 (43,46 ÷ 45,3 MJ/m^3 (0°C))
FR	I_{2Er}
BE	$I_{2E(R)B}$
LU - PL	I_{2E}

Tab. B

4.4 Technical data

Model			RIELLO 40 FS3
Type			565 M
Heat output (Hi) (1)	min - max	kW kcal/h	11 ÷ 35 9,500 ÷ 30,000
Fuel		Family 2	NCV 8 ÷ 12 kWh/m^3 – 7,000 ÷ 10,340 kcal/m^3 Pressure: min. 10 mbar – max. 200 mbar
Operation			Intermittent (FS1)
Use			Boilers: water and diathermic oil
Ambient temperature		°C	0 - 50
Combustion air temperature		°C max	60
Electrical supply			1/230V/50Hz
Fan motor		rpm - rad/s V - Hz W A	2800 - 294 230 - 50 90 0.75
Ignition transformer			Primary 230V / 0.2A – Secondary 8 kV
Capacitor		µF	2
Absorbed electrical power		kW	0.15
Protection level			IP40
Weight		kg	11
Noise levels (2)	Sound pressure Sound power	dB(A)	53.8 65.0

Tab. C

(1) Reference conditions: Room temperature 20°C - Gas temperature 15°C - Barometric pressure 1013 mbar - Altitude 0 m a.s.l.

(2) Sound pressure measured in manufacturer's combustion laboratory, with burner operating on test boiler and at maximum rated output. The sound power is measured with the “Free Field” method, as per EN 15036, and according to an “Accuracy: Category 3” measuring accuracy, as set out in EN ISO 3746.

WARNING

For gas family 3 (LPG) ask for separate kit.

4.5 Maximum dimensions

The maximum dimensions of the flange and burner are given in Fig. 1.

Flange **Burner**

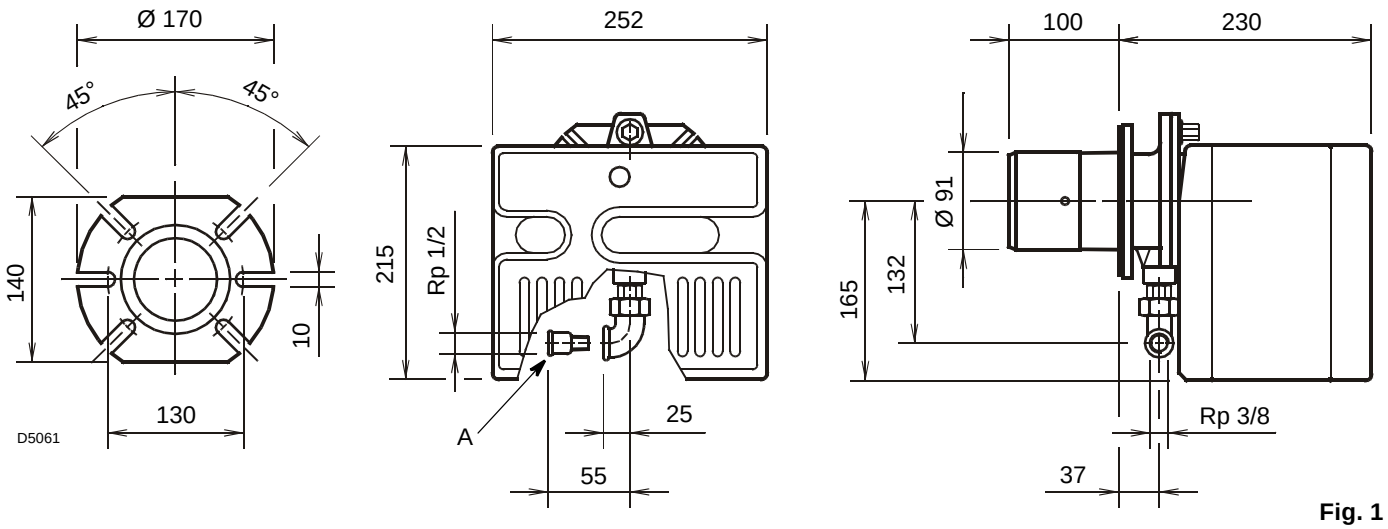

Fig. 1

Key (Fig. 1)
A Reduction pipe coupling Rp 1/2 - R 3/8

4.6 Firing rate

The burner output is chosen from within the diagram area (Fig. 2).

WARNING

The firing rate value (Fig. 2) has been obtained considering an ambient temperature of 20°C, an atmospheric pressure of 1013 mbar (approx. 0 m above sea level), and with the combustion head adjusted as shown on pag. 14.

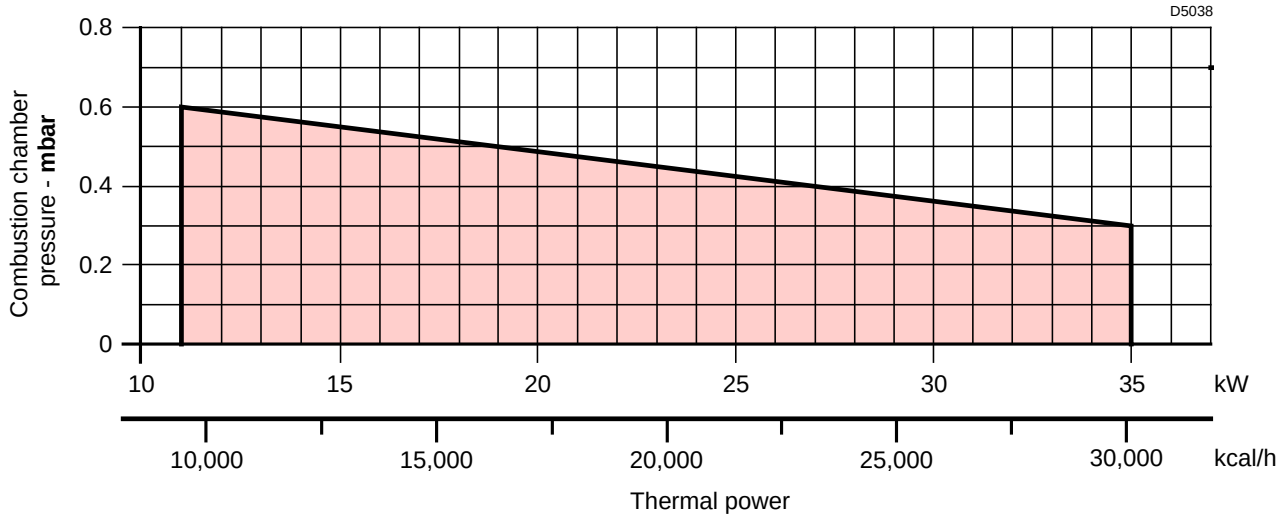

Fig. 2

4.6.1 Test boiler

The firing rate has been defined according to EN 676 standard.

4.6.2 Commercial boilers

The burner-boiler matching is assured if the boiler conforms to EN 303 and the combustion chamber dimensions are similar to those shown in the diagram EN 676.

For applications where the boiler does not conform to EN 303, or where the combustion chamber is much smaller than the dimensions given in EN 676, please consult the manufacturers.

4.7 Correlation between gas pressure and burner output

To obtain the maximum output (Fig. 3), it is necessary to have 4.5 mbar measured on the pipe coupling, with the combustion chamber at 0 mbar and gas G20 - NCV = 10 kWh/Nm^3 (8,570 kcal/Nm^3).

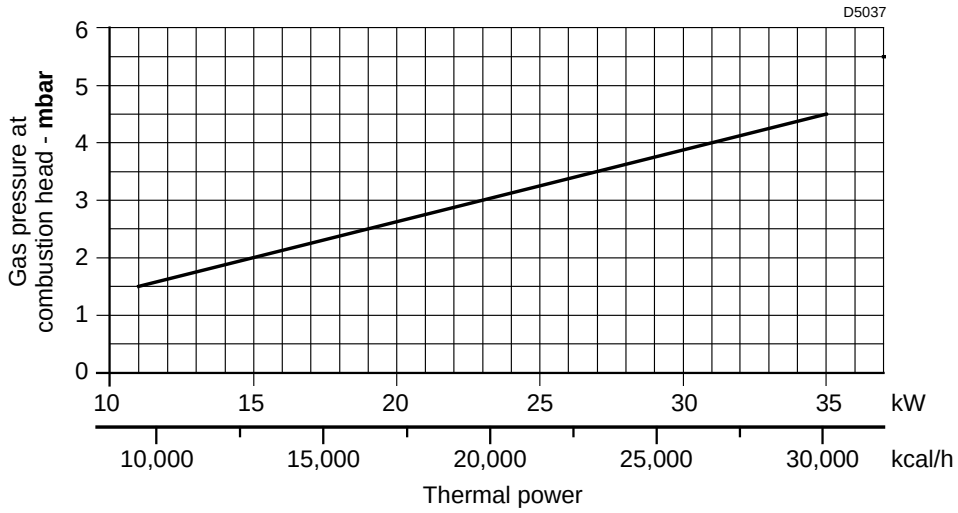

Fig. 3

Gas pressure at combustion head – mbar

4.8 Burner description

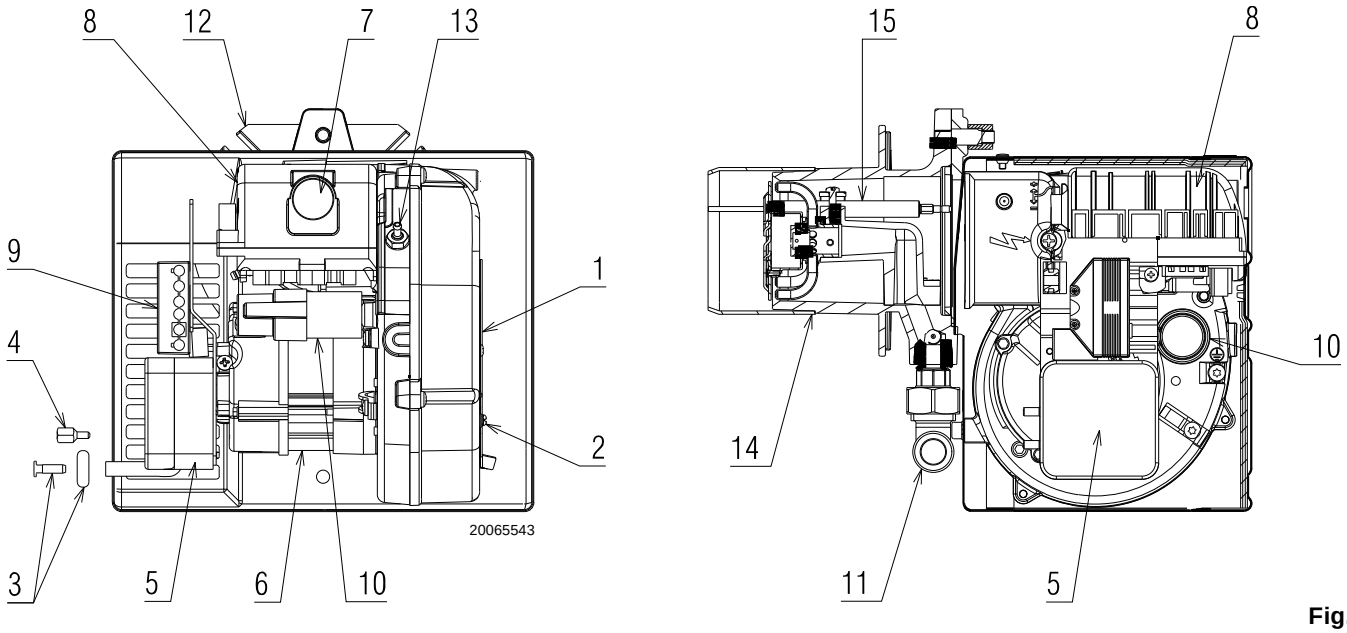

Fig. 4

1 Air damper
2 Damper fixing screws
3 Pressure test point (-)
4 Cover fixing screw
5 Air pressure switch
6 Motor
7 Lock-out signal with reset button
8 Control box
9 6-pole socket for gas train
10 Capacitor
11 Gas train elbow
12 Flange
13 Pressure test point (+)
14 Combustion head
15 Electrode-probe

WARNING

The cable grommet, supplied as standard, should be assembled on the same side as the gas train.

Check that it is possible to access the cover fixing screws once the burner has been installed. If necessary, replace them with the ones supplied

4.9 Burner equipment

Screws with nuts . . . . . No. 4
Insulating gasket . . . . . No. 1
Cover fixing screw . . . . . No. 3
Cable grommet. . . . . No. 1
Reducing pipe coupling Rp 1/2 - R 3/8 . . . . . No. 1
7-pin plug . . . . . No. 1
Instructions . . . . . No. 6
Spare parts list . . . . . No. 1

4.10 Electrical control box

Warnings

WARNING

To avoid accidents, material or environmental damage, observe the following instructions!

The control box is a safety device! Avoid opening or modifying it, or forcing its operation. Riello S.p.A. cannot assume any responsibility for damage resulting from unauthorised interventions!

➤ All interventions (assembly and installation operations, assistance, etc.) must be carried out by qualified personnel.
➤ Before modifying the wiring in the control box connection area, fully disconnect the system from the power supply (omnipolar separation).
➤ Protection against electrocution from the control box and all connected electric components is obtained with the correct assembly.
➤ Before any intervention (assembly and installation operations, assistance, etc.), ensure the wiring is in order and that the parameters are correctly set, then make the safety checks.
➤ Falls and collisions can negatively affect the safety functions. In this case, the control box must not be operated, even if it displays no evident damage.

For safety and reliability, comply with the following instructions:
– avoid conditions that can favour the development of condensate and humidity. Otherwise, before switching on again, make sure that the entire control box is perfectly dry!
– Static charges must be avoided since they can damage the control box's electronic components when touched.

Installation notes

- Check the electric wiring inside the boiler complies with the national and local safety regulations.
- Do not confuse the powered conductors with the neutral ones.
- Ensure that spliced wires cannot get into contact with neighbouring terminals. Use adequate ferrules.
- Arrange the H.V. ignition cables separately, as far as possible from the control box and the other cables.
- When wiring the unit, make sure that AC 230 V mains voltage cables are run strictly separate from extra low-voltage cables to avoid risks of electrical shock hazard.

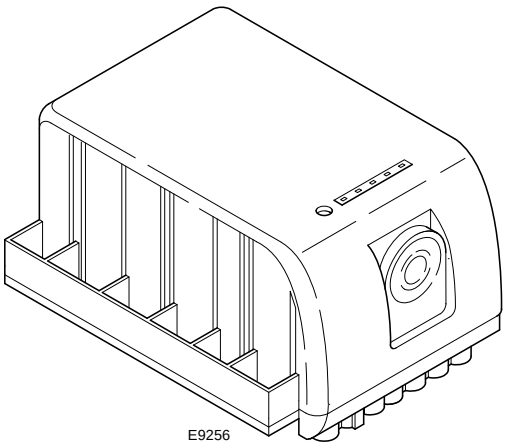

Fig. 5

Electrical characteristics

Description	Unit of measurement	Parameters
Rated power supply voltage (range), tolerance	V A.C.	210...230, +10 -15%
Rated power supply frequency (range), tolerance	Hz	50...60, +5%, -5%
Operation temperature	°C	-20...+60
IP	Protection	00
Auxiliary circuit voltage	V	230AC, 48DC, 5DC
Electrical input power	VA	40
Extreme operating current:		
- terminals V1, V2, S3 - terminals MV, SM - terminals B4	A	$0,5 (\cos\varphi = 0,6)$ $3 (\cos\varphi = 0,6)$ $0,1 (\cos\varphi = 0,6)$
Extreme length of the input signals:		
- inputs T1, T2, RS - inputs PA, PG - input SO	m	20 1 0.5
Internal fuse		F1, T4AL250V
Classification	EN298	F T C L B N

Tab. D

5 Installation

5.1 Notes on safety for the installation

After carefully cleaning all around the area where the burner will be installed, and arranging the correct lighting of the environment, proceed with the installation operations.


DANGER

All the installation, maintenance and disassembly operations must be carried out with the electricity supply disconnected.


WARNING

The installation of the burner must be carried out by qualified personnel, as indicated in this manual and in compliance with the standards and regulations of the laws in force.


DANGER

Combustion air inside the boiler must be free from hazardous mixes (e.g.: chloride, fluoride, halogen); if present, it is highly recommended to carry out cleaning and maintenance more frequently.

5.2 Instructions to avoid burnout or bad combustion of the burner

1 The burner can not be installed outside as it is suitable for operation in closed rooms only.

2 The premises the burner operates in must have openings for the air need for the combustion.
To be sure about this, you have to control CO_2 and CO in the exhaust gases with all the windows and doors closed.

3 If there are air extractors in the premises the burner works, make sure that there are openings for air to be taken in that are big enough to ensure the required air change; In any case, check that when the burner stops the extractors do not draw hot fumes from pipes through the burner.

4 When the burner is stopped, the smoke pipe must be kept open and a natural draft created in the combustion chamber. If the smoke pipe is closed, the burner must be drawn back till the extraction of blast tube from the furnace. Before operating in this way take the voltage off.

5.3 Handling

The transport weight is given in chapter "Technical data" on page 8.

Observe the permissible ambient temperatures for storage and transport: -20 ..... + 70 °C, with max. relative humidity 80%.



After positioning the burner near the installation point, correctly dispose of all residual packaging, separating the various types of material.


CAUTION

Before proceeding with the installation operations, carefully clean all around the area where the burner will be installed.



The operator must use the required equipment during installation.

5.4 Preliminary checks

5.4.1 Control of the supply

CAUTION

After removing all the packaging, check the integrity of the contents.

In the event of doubt, do not use the burner; contact the supplier.

The packaging elements (cardboard box, clips, plastic bags, etc.) must not be abandoned as they are potential sources of danger and pollution; they should be collected and disposed of in the appropriate places.

5.4.2 Control of burner characteristics

Check the identification label of the burner(Fig. 6), showing:

A the burner model
B the burner type
C the cryptographic year of manufacture
D the serial number
E the data for electrical supply and the protection level
F the electrical power consumption
G the data of the burner's minimum and maximum output possibilities (see Firing rate)
Warning. The burner output must be within the boiler's firing rate.

WARNING

A burner label that has been tampered with, removed or is missing, along with anything else that prevents the definite identification of the burner makes any installation or maintenance work difficult.

WARNING

The figure of the label (Fig. 6) is indicative. Some of the data may be arranged in a different position.

R.B.L.	A		TYP TYPE ΤΥΠΟΣ B	B	C
D			E		F
II2ELL 3B/P DE	II2H3P GB, IE,ES	II2E 3B/P LU	II2L 3B/P NL	GAS GAZ ΑΕΡΙΟΥ	☒ FAM.OIK.2 ☐ FAM.OIK.3 G
II2H3B/P DK,AT, GR,SE	Icc A		Imax A Peso Kg	RIELLO S.p.A. I-37048 Legnago (VR)	CE

20065195

Fig. 6

5.5 Operating position

WARNING

- The burner is designed to operate only in positions **1**, **2**, **3** and **4** (Fig. 7).
- Installation **1** is preferable, as it is the only one that allows the maintenance operations as described in this manual.
- Installations **2**, **3** and **4** permit operation but make maintenance and inspection of the combustion head more difficult.

DANGER

- Any other position could compromise the correct operation of the appliance.
- Installation **5** is prohibited for safety reasons.

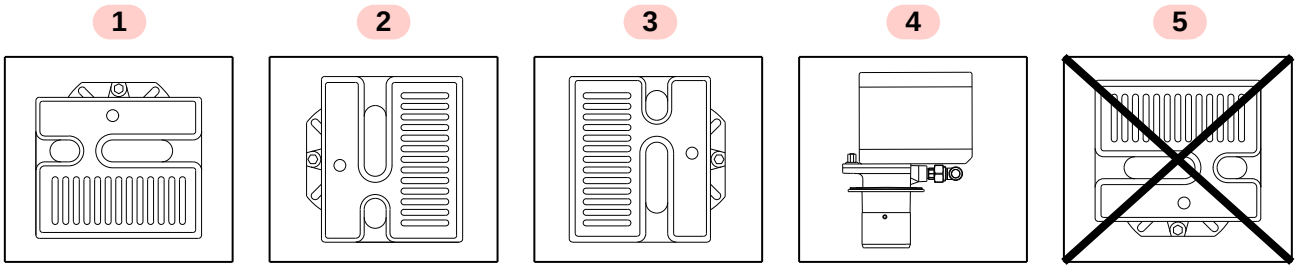

20065196

Fig. 7

5.6 Securing the burner to the boiler

Provide an adequate lifting system of the burner.

➤ Separate the combustion head assembly from the burner body by removing nut 1) and removing the group A)(Fig. 8).
➤ Fix the group B)(Fig. 8) to the boiler plate 2), inserting the supplied insulating gasket 3).

WARNING

The seal between burner and boiler must be airtight.

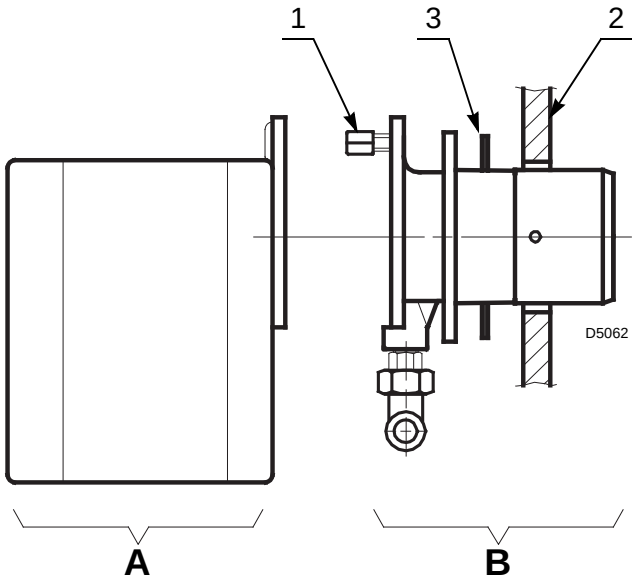

Fig. 8

5.7 Combustion head adjustment

To adjust, proceed as follows:
➤ loosen the two screws A)(Fig. 9), move the elbow B) so that the rear plate of the coupling C) coincides with the desired notch;
➤ screw in the two screws A).

To disassemble the diffuser disc holding head, proceed as follows:
➤ loosen the two screws A)(Fig. 9) without removing them;
➤ pull back the head, rotating it by about 180°,
➤ extract the head, tilting it downwards,

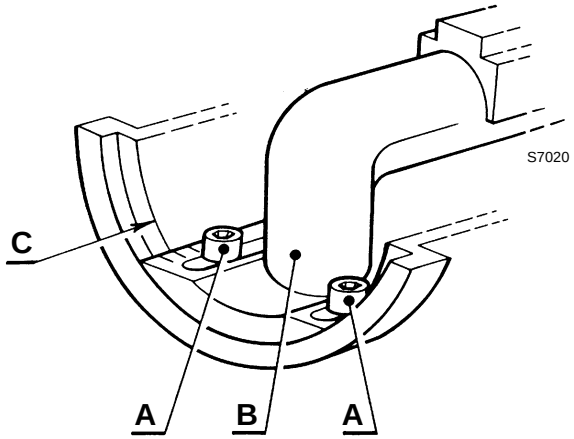

Fig. 9

Example:

The burner is installed in a 21 kW boiler.
Considering an efficiency of 90%, the burner must supply around 23kW.

The diagram (Fig. 10) shows that for this output the adjustment must be made on notch 1.

The diagram is to be used only for initial settings,. To ensure good air pressure switch operation it may be necessary to reduce this combustion head opening (notch toward pos. 0).

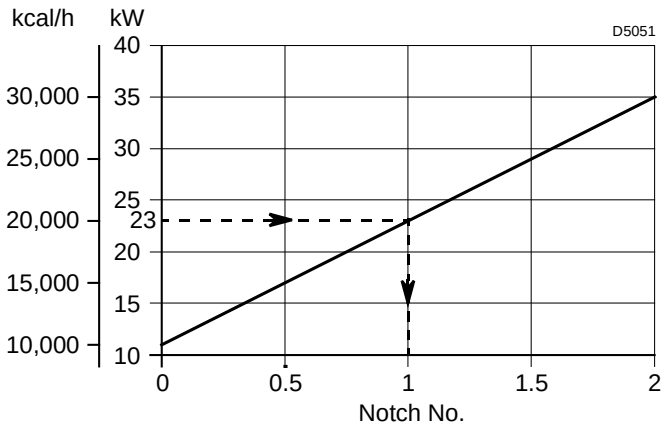

Fig. 10

5.8 Positioning the probe - electrode

WARNING

Do not turn the ignition electrode but leave it as shown in Fig. 11.

if the ignition electrode is put near the ionisation probe, the control box amplifier might be damaged.

WARNING

Place the ceramic part of the electrode A) against the diffuser disc B)(Fig. 11).

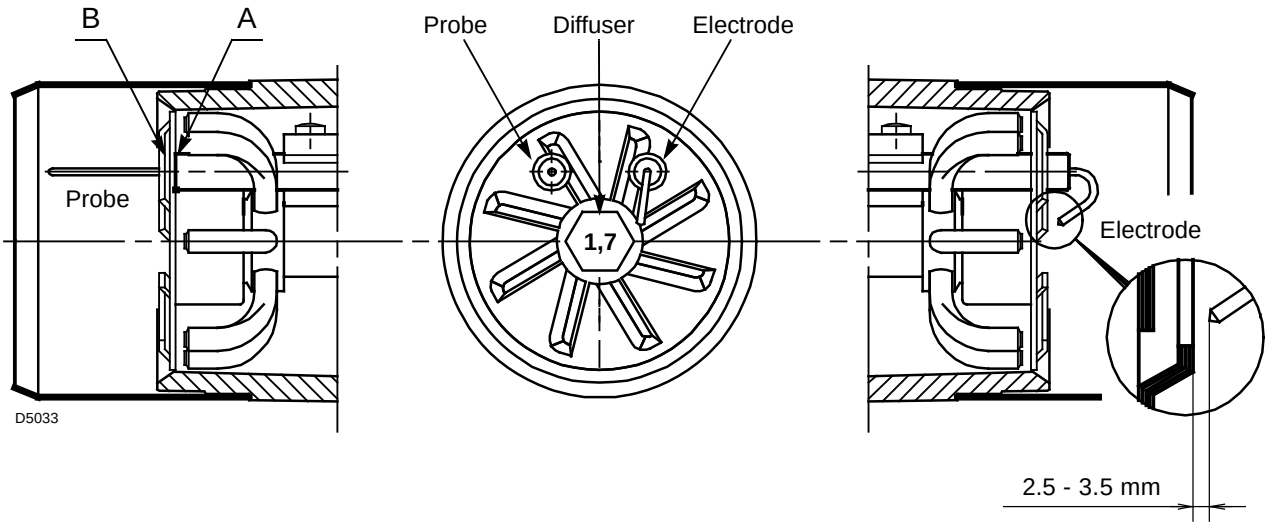

Fig. 11

5.9 Gas feeding

Explosion danger due to fuel leaks in the presence of a flammable source.

Precautions: avoid knocking, attrition, sparks and heat.

Make sure the fuel interception tap is closed before performing any operation on the burner.

WARNING

The fuel supply line must be installed by qualified personnel, in compliance with current standards and laws.

5.9.1 Gas feeding line

MBC 65/1

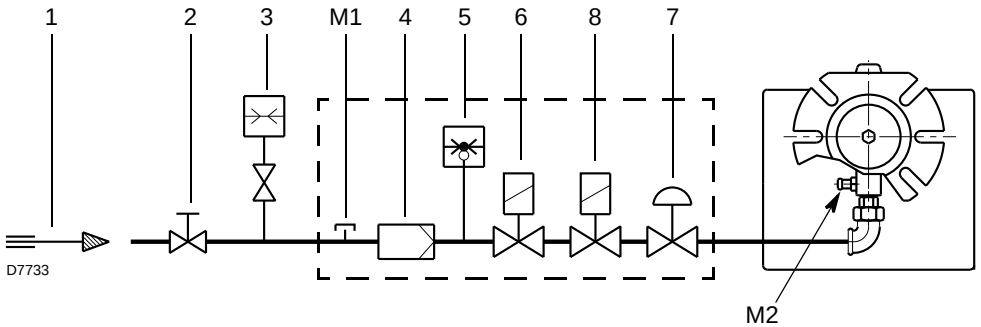

Fig. 12

Key (Fig. 12)

1 Gas input pipe
2 Manual gate (the responsibility of the installer)
3 Gas pressure gauge (the responsibility of the installer)
4 Filter
5 Gas pressure switch
6 Safety valve
7 Pressure stabiliser
8 Adjustment valve
M1 Gas-supply pressure test point on the gas pressure switch
M2 Pressure coupling test point

5.9.2 Gas train

Approved according to standard EN 676 and provided separately from the burner. Supplied separately for its adjustment, see the enclosed instructions.

The train-burner combination is indicated in Tab. E.

Code	Model	Connections		Use
		Gas train	Burner	
3970569	MBC 65/1 - RSD 20	Rp 1/2	Rp 1/2	Natural gas and LPG

Tab. E

5.9.3 Gas train installation



DANGER

Disconnect the electrical power using the main switch.



Check that there are no gas leaks.



Pay attention when handling the train: danger of crushing of limbs.



Make sure that the gas train is properly installed by checking for any fuel leaks.

The gas train 1)(Fig. 13) leaves the factory ready for installation to the burner's left.

If it is to be installed on the right, fit the valve turned by 90° with respect to the gas-out flange and with the gas pressure switch pointed upwards.

Connection between the gas supply line and the train must be made using the gas-in flange 3) supplied, and fastening screws.



WARNING

It is best to tighten screws in a criss-cross pattern.

Do not, under any circumstances, install the valve with the coil facing down.

Connect the 6 pin plug 2)(Fig. 13 of the gas train to the 6-pole socket 9)(Fig. 4 on page 10) of the burner.



WARNING

Once installation is complete, you must check for fuel leaks and make sure the gas train is working properly.

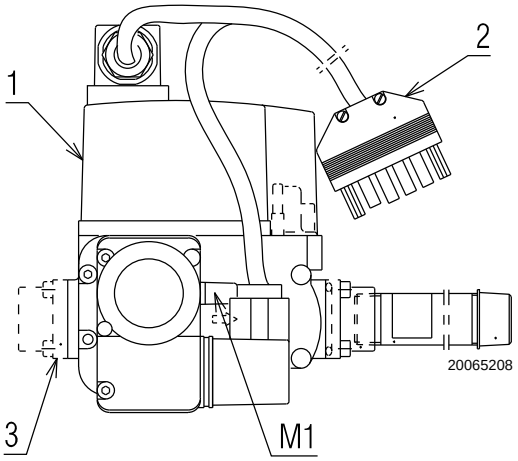

Fig. 13

5.10 Electrical wiring

5.10.1 Notes on safety for the electrical wiring

DANGER

- The electrical wiring must be carried out with the electrical supply disconnected.
- Electrical wiring must be made in accordance with the regulations currently in force in the country of destination and by qualified personnel. Refer to the wiring diagrams.
- The manufacturer declines all responsibility for modifications or connections different from those shown in the wiring diagrams.
- Check that the electrical supply of the burner corresponds to that shown on the identification label and in this manual.
- The burner has been type-approved for intermittent use.
  In the event of continuous operation, a cycle arrest must be ensured within 24 hours with the use of a time switch positioned in series with the thermostatic line. Refer to the wiring diagrams.
- The electrical safety of the device is obtained only when it is correctly connected to an efficient earthing system, made according to current standards. It is necessary to check this fundamental safety requirement. In the event of doubt, have the electrical system checked by qualified personnel. Do not use the gas tubes as an earthing system for electrical devices.
- The electrical system must be suitable for the maximum power absorption of the device, as indicated on the label and in the manual, checking in particular that the section of the cables is suitable for that level of power absorption.
- For the main power supply of the device from the electricity mains:
  - do not use adapters, multiple sockets or extensions;
  - use a multiple pole switch with at least a 3 mm gap between the contacts (overvoltage category III), as envisaged by the present safety standards.
- Do not touch the device with wet or damp body parts and/or in bare feet.
- Do not pull the electric cables.

Before carrying out any maintenance, cleaning or checking operations:

DANGER

Disconnect the electrical supply from the burner by means of the main system switch.

DANGER

Turn off the fuel interception tap.

DANGER

Avoid condensate, ice and water leaks from forming.

If the cover is still present, remove it and proceed with the electrical wiring according to the wiring diagrams.

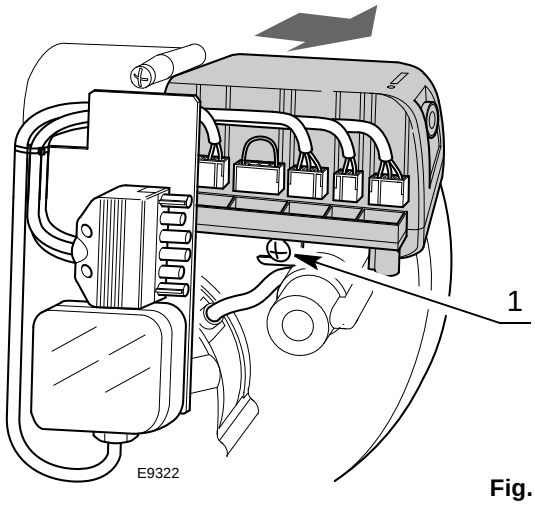

Fig. 14

5.10.2 Control box

DANGER

Disconnect the electrical supply from the burner by means of the main system switch.

To remove the control box from the burner it is necessary to:

- disconnect all the connectors connected to it, the 6-pin plug, the high voltage cables, and the earth wire (TB);
- loosen the screw 1)(Fig. 14) and pull the control box in the direction of the arrow.

For the installation:

- tighten screw 1)(Fig. 14) with a tightening torque of 1 ÷ 1.2 Nm;
- reconnect all previously disconnected connectors, making sure to connect the 7 pin power plug as the final step.

After carrying out maintenance, cleaning or checking operations, reassemble the hood and all the safety and protection devices of the burner.

5.10.3 Electrical diagram

Key (Fig. 15)

C	Motor capacitor
CN1	Ionisation probe connector
E	Ignition electrode
h1	Hour counter (230V - 0.1A max.)
MV	Fan motor
PA	Air pressure switch
PG	Min. gas pressure switch
RS	Remote reset connection
SB	Lockout light (230V - 0.5A max.)
SM	One-stage damper conn.
SO	Ionisation probe
TB	Burner earth
TL	Limit thermostat
TS	Safety thermostat
T6A	Fuse
V1	Adjustment valve
VS	Safety valve
XP6	6 pin plug/socket
XP7	7 pin/plug socket

Testing

➤ Check the shut down of the burner by opening the thermostats.

➤ Check that the burner is blocked while working by opening the connector (CN1) inserted in the probe red wire and located outside the control box.

5.10.4 Ionisation current

The minimum current necessary for the control box operation is 5 µA. The burner normally supplies a higher current value, so that no check is needed.
Anyway, if you want to measure the ionisation current, you need to open the connector (CN1)(Fig. 15) on the red wire and insert a microammeter as shown in Fig. 16.

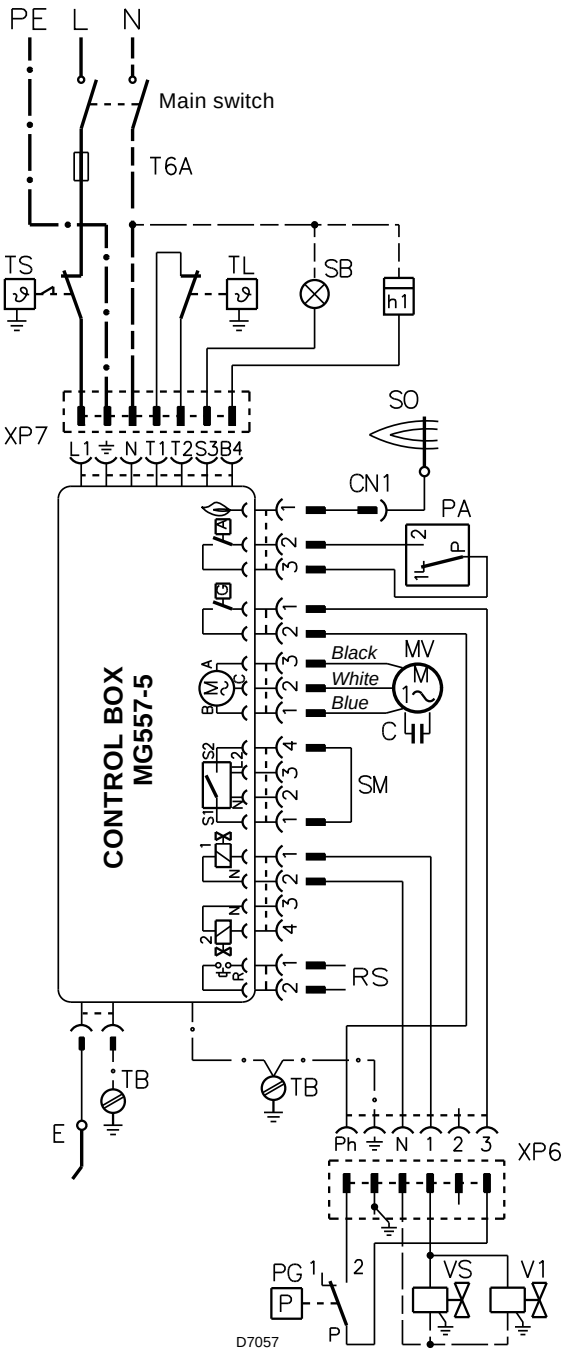

Fig. 15

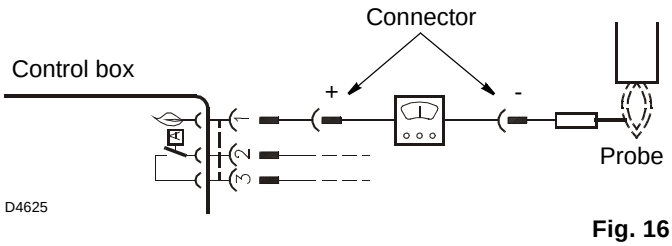

Fig. 16

6 Start-up, calibration and operation of the burner

6.1 Notes on safety for the first start-up

WARNING

The first start-up of the burner must be carried out by qualified personnel, as indicated in this manual and in compliance with the standards and regulations of the laws in force.

WARNING

Check the correct working of the adjustment, command and safety devices.

6.2 Adjustments prior to ignition

- ➤ Check the adjustment of the head as shown in pag. 14.
- ➤ Check that the air damper has been correctly adjusted.
- ➤ Slowly open the manual valves situated upstream from the gas train.
- ➤ Adjust the air pressure switch (Fig. 17) to the start of the scale.
- ➤ Purge the air from the gas line.

We recommend using a plastic tube routed outside the building and to purge air until gas is smelt.

CAUTION

Before starting up the burner, it is good practice to adjust the gas train so that ignition takes place in conditions of maximum safety, i.e. with gas delivery at the minimum.

6.3 Combustion adjustment

In conformity with EN 676 the application of the burner on the boiler, adjustment and testing must be carried out observing the instruction manual of the boiler, including verification of the CO and CO2 concentration in the flue gases, their temperatures and the average temperature of the water in the boiler.

It is advisable to set the burner according to the type of gas used and following the indications inTab. F.

EN 676		Air excess: max. output. $\lambda \leq 1.2$ – min. output$\lambda \leq 1.3$			
GAS	Theoretical max CO2 0 % O2	Setting CO2 %		CO mg/kWh	NOx mg/kWh
		$\lambda = 1.2$	$\lambda = 1.3$		
G 20	11.7	9.7	9.0	≤ 100	≤ 170
G 25	11.5	9.5	8.8	≤ 100	≤ 170
G 30	14.0	11.6	10.7	≤ 100	≤ 230
G 31	13.7	11.4	10.5	≤ 100	≤ 230

Tab. F

6.4 Air pressure switch

Adjust the air pressure switch (Fig. 17) after performing all other burner adjustments with the air pressure switch set to the start of the scale.

With the burner function at the required output, turn the knob slowly in a clockwise direction until burner lockout.

Then turn the knob anticlockwise to an extent that is around 20% of the adjusted value and then check that the burner starts up properly.

If the burner locks out again turn the knob slightly in an anticlockwise direction.

WARNING

In conformity with the standard, the air pressure switch must prevent the air pressure falling below 80% of the adjusted value and the CO in the flue gases exceeding 1% (10,000 ppm).

To check this, insert a combustion analyser in the flue, slowly reduce the burner air setting (for example with a piece of cardboard) and verify that the burner locks out before the CO value in the flue gases exceeds 1%.

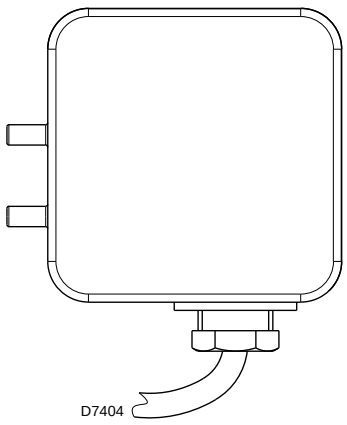

Fig. 17

6.5 Operation sequence of the burner

6.5.1 Regular operation

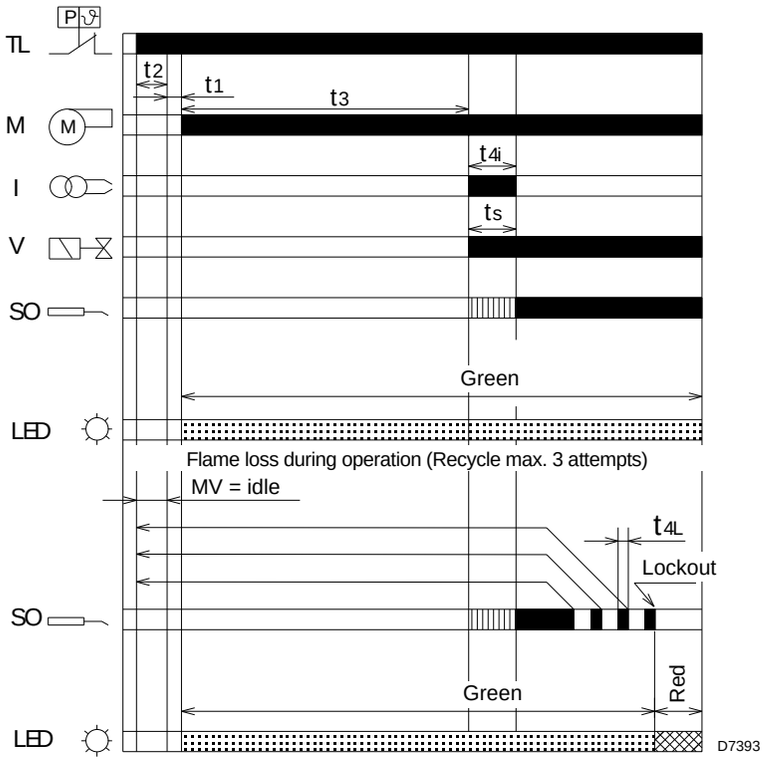

Key (Fig. 18)

I	Ignition transformer
LED	Reset button LED indicating operating status
M	Fan motor
SO	Ionisation probe
TL	Limit thermostat
V	Gas valve

Red (LED signalling)

Green (LED signalling)

No signal needs to be received

Fig. 18

Operating times (in seconds)

t1, t3l, t4l, t4a	t2l	t2	t2a	t3	t3a	t3r	ts, t4i	t6
max	max	-	-	-	max	max	-	max
1	30	3	120	40	15	70	5	360

Tab. G

t1	Standby time pending an input signal to control box: reaction time, the control box remains idle for the time **t1**.
t1l	Flame or flame simulation detected before demand for heat: the control box remains idle.
t2	Standby time after a heat request: the control box remains idle for the **t2** time.
t2a	Check whether the air pressure switch has already been moved to the work position before the required heat: the control box remains in standby status, a lockout follows if the air pressure switch remains switched for the **T2a** time.
t2l	Flame or flame simulation detected before during standby time: lockout occurs if flame or flame simulation persists for time **t2l**.
t3	Pre-purge time: start of the fan motor.
t3a	Time for checking the switching of the air pressure switch in the operating position during the pre-purging time: if the pressure switch does not switch within **t3a** a lockout follows.
t3l	Flame or flame simulation detected during pre-purging: immediate lockout.
t3r	A recycle attempt is made if there is a pressure drop during the pre-purging stage: there is then a lockout in the event of a second loss of air pressure between the 16th second and the 29th; is a loss of pressure between the 30th second and the 40th, the device goes immediately into lockout mode.
ts	Safety time: if at the end of the **ts** time there is no flame, a lockout follows.
t4a	Air pressure drop checking time during the **ts** time and the normal operation: the control box locks out immediately.
t4i	Transformer ignition time: total ignition time.
t4l	Loss of flame during operation: maximum reaction time for dropped valve - after 3 recycle attempts there is a lockout.
t6	Post-purge time: additional purging time on the opening of the heat limit thermostat (**TL**).

Tab. H

ПРОМЭЛЕКТРОНИКА / sales@prom-elec.com

6.5.2 Lockout due to ignition failure

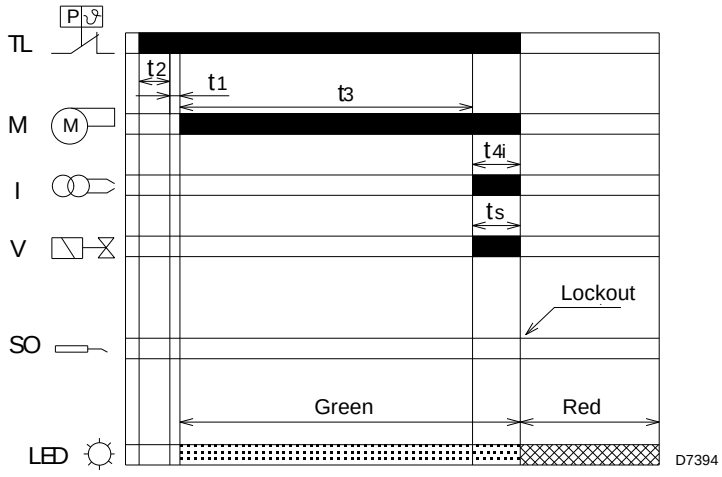

Key (Fig. 19)

I	Ignition transformer
LED	Reset button LED indicating operating status
M	Fan motor
SO	Ionisation probe
TL	Limit thermostat
V	Gas valve

Red (LED signalling)

Green (LED signalling)

Fig. 19

6.5.3 Lockout due to a flame or flame simulation detected during pre-purging

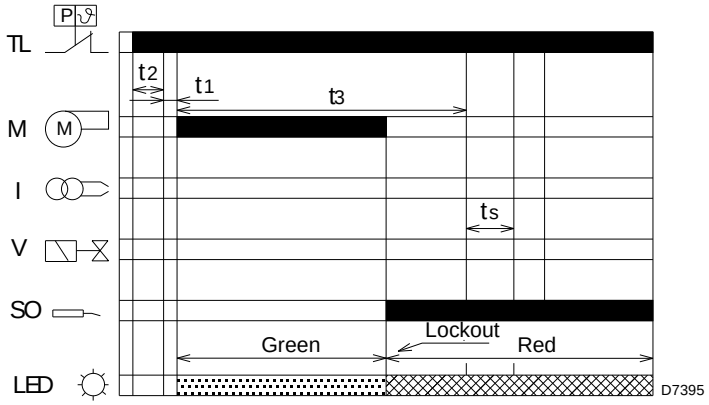

Key (Fig. 20)

I	Ignition transformer
LED	Reset button LED indicating operating status
M	Fan motor
SO	Ionisation probe
TL	Limit thermostat
V	Gas valve

Red (LED signalling)

Green (LED signalling)

Fig. 20

Operating times (in seconds)

t1, t3l, t4l, t4a	t2l	t2	t2a	t3	t3a	t3r	ts, t4i	t6
max	max	-	-	-	max	max	-	max
1	30	3	120	40	15	70	5	360

Tab. I

6.5.4 Lockout types and triggering times in case of burner malfunction

Description of types of faults	Lockout
Presence of flame during standby time “t2”	After max. 30 seconds (after TL)
Presence of flame in pre-purging, or loss of air pressure during operation	Within 1 second
Air pressure loss during pre-purging;	After max. 1 repetition within 1 second
No ignition at the end of the safety time “ts”	Within 5 seconds
Disappearance of flame during operation	After max. 3 repetitions within 1 second
Fault in air pressure switch before or after the start-up of the burner	Within 120 seconds, within 15 seconds

Tab. J

6.6 Control box reset

6.6.1 Reset using built-in button

To carry out the control box reset, proceed as follows:

➤ Press and hold the reset button for 1-2 seconds.

➤ In case the burner does not restart it is necessary to check if the limit thermostat (TL) is closed.

➤ If the control box reset button continues to blink, signalling the cause of the failure (red LED), it is necessary to press the button again for no more than 2 seconds.



WARNING

If the reset button is pressed for more than 2 seconds, the control box goes into visual diagnostic mode and the signalling LED begins to blink (see "Visual diagnostics of the control box" on page 23).

6.6.2 Reset using remote connection

An accessory connection is provided for the remote reset of the control box.

6.6.3 Colour code of the control box reset button LED

Operating status	LED colour codes
Waiting	LED switched off
Pre-purging	Green
Ignition transformer	Green
Regular flame	Green
Post-purging	Green
Recycle	Green
Continuous purging (*)	Green
Presence of flame during waiting time	LED switched off
Lockout	Red
Lockout with continuous purging (*)	Red + Green

(*) only for suitable applications.

6.7 Recycle function (in the event of flame disappearance during operation)

The control box allows recycling, i.e. the complete repetition of the starting programme, for 3 attempts maximum, in the event the flame goes out during operation.

The further disappearance of the flame (4th time) determines the lockout of the burner.

If there is a new heat request during the recycle, the 3 attempts are restored to the switch-over of the limit thermostat (TL).

6.8 Logging of burner operating parameters

The control box allows the logging (even without the electrical power supply) of the number of lockouts that have occurred, the type of lockout that has occurred (only the last one) and the operating time of the opening of the oil valve.

That way, you can determine how much fuel has been consumed during operation.

For the display of these parameters it is necessary to connect the diagnostic software kit.

6.9 Additional, programmable control box functions

6.9.1 Post-purging function (t6)

Post-ventilation is a function that maintains air ventilation even after the burner is switched off. The switching off of the burner comes about when the limit thermostat (TL) opens, with the consequent interruption of the supply of fuel of the valves. To use this function the reset button must be pressed when the limit thermostat is not switched over (burner switched off).

The post-purging time can be set for a maximum of 6 minutes, proceeding as follows:

- ➤ press the reset button for at least 5 seconds, until the signalling LED turns red.
- ➤ Set the desired time by pressing the button repeatedly: once = post-ventilation for 1 minute.
- ➤ after 5 seconds the control box will automatically indicate the minutes set, via the blinks of the red LED: 1 blink = post-purging for 1 minute.

To reset this function, simply press and hold the button for 5 seconds until the LED indicator goes red and release it without performing any operation, then wait for at least 20 seconds to allow the burner to restart.

If during post-ventilation there is a new request for heat, post-ventilation time is halted and a new operating cycle starts when the limit thermostat (TL) switches over.

The control box leaves the factory with the following setting: 0 minutes = no post-purging.

6.9.2 Continuous purging function (only for applications in which this is provided for)

Continuous purging is a function that maintains the air ventilation independently of the request for burner ignition.

From the moment when it is set, the motor remains in operation both when the limit thermostat (TL) is not switched over (burner switched off), and when the burner is in lockout.

On the switch-over of the limit thermostat (TL) the motor stops for a waiting time of 4 seconds (waiting position = t2 + t1), there is a subsequent check of the air pressure switch and the start of a new operational cycle for the burner.

The function can be set via the reset button when the limit thermostat (TL) is not switched over (burner switched off), following the procedure of the "post-purging function" paragraph and pressing the button 7 times = continuous purging.

To reset this function, simply press and hold the button for 5 seconds until the LED indicator goes red and release it without performing any operation, then wait for at least 20 seconds to allow the burner to restart.

The control box leaves the factory with the following setting: 0 minutes = no continuous post-purging.

6.9.3 Function setting procedure using the reset button

Control box function	Actions on the reset button	Status of possible use of the reset button
Reset	1 - 2 seconds	After lockout of control box
Visual diagnostic of the lockout causes	3 seconds	After lockout of control box
Post-purging	5 seconds, then press 1 time = 1 minute	With limit thermostat (TL) not switched (burner off)
Continuous purging (only for suitable applications)	5 seconds, then press 7 times = continuous purging	With limit thermostat (TL) not switched (burner off)
Resetting set functions	5 seconds	With limit thermostat (TL) not switched (burner off)
Reset of operational parameters	5 seconds	With limit thermostat (TL) switched over during pre-purging

Tab. K

6.10 Visual diagnostics of the control box

The control box supplied features a diagnostics function through which any causes of malfunctioning can be identified (indicator: red LED).

In order to be able to use this function, press and hold the reset button for at least 3 seconds from when the appliance is made safe (lockout).

The control box sends a sequence of pulses that are repeated at 2-second intervals.

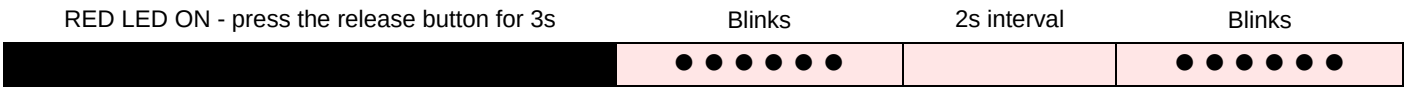

The sequence of led pulses issued by the control box identifies the possible types of malfunction, which are listed in the table Tab. L.

Signal	Possible cause
2 blinks ● ●	The flame does not stabilise at the end of the safety time: – faulty ionisation probe – faulty gas valve; – neutral/phase exchange; – faulty ignition transformer – poor burner regulation (insufficient gas)
3 blinks ● ● ●	Min. air pressure switch does not close or is already closed before the limit thermostat closing: – air pressure switch faulty – air pressure switch incorrectly regulated
4 blinks ● ● ● ●	Presence of flame: – after the closure of the limit thermostat – during pre-purging
6 blinks ● ● ● ● ● ●	Air pressure drop: – during pre-purging – during safety time or operation
7 blinks ● ● ● ● ● ● ●	Disappearance of the flame 4 times during operation: – poor burner regulation (insufficient gas) – faulty ionisation probe – faulty gas valve – short circuit between ionisation probe and earth

Tab. L



WARNING

To reset the control box after the diagnostics display, press the lockout-reset button.

7 Maintenance

7.1 Notes on safety for the maintenance

The periodic maintenance is essential for the good operation, safety, yield and duration of the burner.

It allows you to reduce consumption and polluting emissions and to keep the product in a reliable state over time.



The maintenance interventions and the calibration of the burner must only be carried out by qualified, authorised personnel, in accordance with the contents of this manual and in compliance with the standards and regulations of current laws.

Before carrying out any maintenance, cleaning or checking operations:



Disconnect the electrical supply from the burner by means of the main system switch.



Turn off the fuel interception tap.



Wait for the components in contact with heat sources to cool down completely.

7.2 Maintenance programme

7.2.1 Maintenance frequency



The gas combustion system should be checked at least once a year by a representative of the manufacturer or another specialised technician.

7.2.2 Checking and cleaning



The operator must use the required equipment during maintenance.

Combustion
Check there are no occlusions or obstructions in the fuel supply or return lines, in the air suction areas, and in the combustion product waste pipe.

Carry out an analysis of the combustion flue gases.

Significant differences with respect to the previous measurements indicate the points where most care should be exercised during maintenance.

Combustion head

Check that the positioning of the combustion head is correct and that it is properly fixed to the boiler.
Open the burner and make sure that all components of the combustion head are in good condition, not deformed by the high temperatures, free of impurities from the surroundings and correctly positioned.

Burner
Check that there are not excess wear or loosen screws.
Clean the outside of the burner.

Fan
Check that the air damper is positioned correctly.
Check to make sure that no dust has accumulated inside the fan or on its blades, as this condition will cause a reduction in the air flow rate and provoke polluting combustion.

Boiler
Clean the boiler as indicated in its accompanying instructions in order to maintain all the original combustion characteristics intact, especially the flue gas temperature and combustion chamber pressure.

Gas train
Check that the gas train is suited to the burner capacity, the type of gas used and the mains gas pressure.

Electrode-probe
Checking the proper positioning of the ionisation probe and electrode as shown in Fig. 11 on page 15.

Pressure switches
Check that the air pressure switch and the gas pressure switch are set correctly.

Gas leaks
Make sure that there are no gas leaks on the pipe between the gas meter and the burner.

Gas filter
Change the gas filter when it is dirty.

Combustion
If the combustion values measured before starting maintenance do not comply with applicable legislation or do not indicate efficient combustion, consult the Tab. F on page 19 or contact our Technical Support Service to implement the necessary adjustments.

Leave the burner working without interruptions for 10 min. and set rightly all the components stated in this manual. Then carry out a combustion check verifying:
– Percentage of CO_2 (%);
– CO content (ppm)
– NOx content (ppm)
– Ionisation current (µA)
– Smoke temperature at the flue

7.3 Opening the burner


DANGER

Disconnect the electrical supply from the burner by means of the main system switch.


DANGER

Turn off the fuel interception tap.



Wait for the components in contact with heat sources to cool down completely.

If maintenance of the combustion head is required, refer to the instructions given in "Operating position" on page 13.

For accessing to the interior of the burner, loosen the screws that secure the cover and proceed with the maintenance operation.


DANGER

Operating safety hazards

Repairs to the following components may only be carried out by the respective manufacturers or by personnel instructed by them:
- fan motor
- actuator
- air damper servomotor
- electromagnetic valves
- burner programmer

Check the operation
- Start-up of the burner with a sequence of functions (see chapter "Operation sequence of the burner" on page 20).
- Ignition device
- Air pressure switch
- Flame monitoring
- Tightness test of components to the passage of fuel



After carrying out maintenance, cleaning or checking operations, reassemble the hood and all the safety and protection devices of the burner.

8 Faults - Possible causes - Solutions

Here below you can find some causes and the possible solutions for some problems that could cause a failure to start or a bad working of the burner

In most cases, an operation irregularity leads to the lighting up of the signal inside the reset button of the control box (Fig. 4 on page 10).

When lockout lamp lights the burner will attempt to light only after pushing the reset button After this if the burner functions correctly, the lockout can be attributed to a temporary fault.

However, if lockout continues, you must determine the cause of the problem and take the action illustrated in Tab. M and Tab. N.



WARNING

In the event the burner stops, in order to prevent any damage to the installation, do not unblock the burner more than twice in a row. If the burner locks out for a third time, contact the customer service.



DANGER

In the event there are further lockouts or faults with the burner, the maintenance interventions must only be carried out by qualified, authorised personnel, in accordance with the contents of this manual and in compliance with the standards and regulations of current laws.

8.1 Start-up problems

Faults	Possible Causes	Solution
The burner does not start when the limit thermostat closes (TL).	Lack of electrical supply.	Check presence of voltage in the L1-N clamps of the 7 pin plug.
		Check the conditions of the fuses.
		Check that safety thermostat (TS) is not in lockout.
	Lack of gas.	Check the manual cock opening.
		Check that the valves charge over to the opening position and there are not short circuits.
	The gas pressure switch does not close its contact.	Adjust them.
	The connections in the control box are wrongly inserted.	Check and connect completely all the plugs.
	The air pressure switch is changed over to the operational position.	Replace the pressure switch.
Burner runs normally in pre-purging and ignition cycle and locks out after the safety time.	The phase-neutral connection is inverted.	Invert them.
	The earth connection lacks or is inefficient.	Make the earth connection efficient.
	The ionisation probe is earthed or not in contact with the flame, or its wiring to the control box is broken, or there is a fault on its insulation to the earth.	Check the right position and if necessary set it according to the instructions of this manual.
		Reset the electrical connection.
		Replace the faulty connection.
Burner starts with an ignition delay.	The ignition electrodes is wrongly positioned.	Adjust it according to the instructions of this manual.
	Air output is too high.	Set the air output according to the instructions of this manual.
	Valve brake is too close with insufficient gas output.	Adjust it.
The burner locks out after the pre-purge phase due to flame-failure.	The solenoid valves is passing too little gas.	Check the pressure in the network and/or adjust the solenoid valve according to the instructions of this manual.
	The solenoid valves are defective.	Change them.
	The ignition arc is irregular or has failed.	Check the right insertion of the connectors.
		Check the right position of the electrode according to the instructions of this manual.
	The pipe has not been purged from the air.	Carry out a complete breathing of the line of gas-supply.
The burner locks out during the pre-purge phase.	The air pressure switch does not change over to the operational position.	The pressure switch is faulty, change it.
		The air pressure is too low, (the head is bad adjusted).
	The flame exists.	Faulty valves: replace them.

Faults	Possible Causes	Solution
The burner continues to repeat the starting cycle without going on lockout.	The gas pressure in the gas-mains lies very close to the value to which the gas pressure switch has been set. The sudden drop in pressure when the valve is opened provokes the opening of the pressure switch itself, so the valve closes again immediately and the motor stops. The pressure then starts to increase again, the pressure switch closes, the start-up cycle begins again and so on.	Lower and set the pressure switch.

Tab. M

8.2 Operating faults

Fault	Possible Causes	Solution
The burner locks out during operation.	Earth probe.	Check the right position and if necessary set it according to the instructions of this manual.
		Clean or replace the ionisation probe.
	The flame disappears 4 times.	Check the gas pressure in the network and/or adjust the solenoid valve according to the instructions of this manual .
	Air pressure switch opening.	The air pressure is too low, (the head is bad adjusted).
		The air pressure switch is faulty: change it.
Burner shut down.	Gas pressure switch opening.	Check the pressure in the network and/or adjust the solenoid valve according to the instructions of this manual.

Tab. N

A Appendix - Accessories

Long head kit

Burner	Standard length (mm)	Long head length (mm)	Code
RIELLO 40 FS3	100	125	3000820

LPG kit

Burner	Code
RIELLO 40 FS3	3000881

Town gas kit

Burner	Code
RIELLO 40 FS3	3000888

Remote reset kit for control box MG 557-5

Burner	Code
RIELLO 40 FS3	3002750

Air suction kit

Burner	Code
RIELLO 40 FS3	20027571

Faults kit

Burner	Code
RIELLO 40 FS3	3001180

7 pin plug kit

Burner	Code
RIELLO 40 FS3	3000945

Software diagnostics kit

Burner	Code
RIELLO 40 FS3	3002731

Gas trains in compliance with EN 676

Please refer to manual.

RIELLO S.p.A.
I-37045 Legnago (VR)
Tel.: +39.0442.630111
http:// www.riello.it
http:// www.riello.com

Subject to modifications