EUROFLAT SERIES
TYPES C... S... M...

AUTOMATIC CONTROL SYSTEMS FOR GAS BURNERS AND GAS BURNING APPLIANCES WITH OR WITHOUT FAN

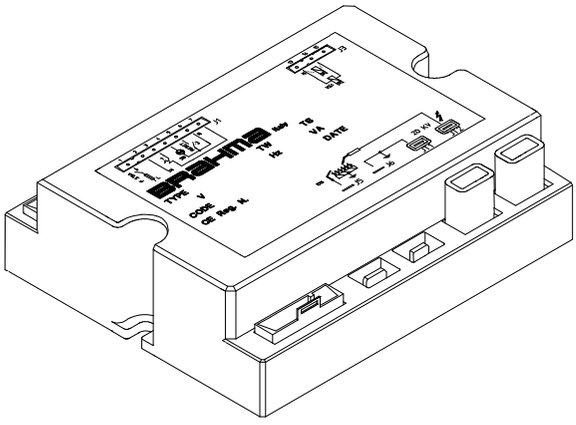

APPLICATION

The electronic systems of this range are suitable to control gas atmospheric burners with or without fan in the combustion circuit for non-permanent operation. .

The controllers of this series can be provided with non-volatile or volatile lockout; in the first version restarting the controller from a safety lockout condition can be accomplished only by a manual reset of the system. In the electric restart versions restarting the controller from a safety lockout condition can be achieved only by the interruption of the power supply and its subsequent restoration.

This series of controllers can be mounted in:

- combi boilers
- heating boilers
- warm air generators
- radiant tube heaters
- water heaters

Due to the models technical and constructive features and to their variety they can be used also for the automation of ovens, cookers, stoves and generally in gas firing installations with atmospheric burner.

FEATURES

Table 1 shows the main features of this series

Other important features are:

- EC certification type (CE PIN 0694BR1154) in accordance with Gas Appliance Directive 90/396 and the following amendment of Directive 93/68;
- In accordance with EN 298 (European standard for programming and flame control automatic systems of gas burners);
- Flame monitoring based on the rectification property of the flame (ionization);
- two independent safety contacts in series on the gas valve output (manual reset models);
- electrical service life at max. declared loading > 250.000 operations;
- inbuilt ignition device completely of solid state design and high efficiency;
- auxiliary contact for low power ignition or main gas valve control for intermittent pilot systems (this contact is not isolated from the main supply voltage by reinforced isolation, therefore the relay contact is not suitable to control SELV circuits – Safety Extra Low Voltage, e.g. 24V).

ПРОМЭЛЕКТРОНИКА / sales@prom-elec.com

TABLE 1

	BURNER						OPTION				
	Manual reset	**Electric reset**	**Single flame**	**Dual flame**	**Atmospheric without fan**	**Atmospheric with fan**	**Auxiliary contact(1)**	**Single electrode**	**EN298:1993 compliant**	**EN298:2003 (2) compliant**	**Classification code according to EN 298 (3)**
CM11	*		*		*				*	*	AMCLXN
CM31	*		*			*			*	*	FMCLXN
CM32	*			*		*	*		*	*	FMCLXN
SM11	*			*	*		*		*	*	AMCLXN
MM51	*			*	*		*	*	*	*	AMCLXN
MM32	*			*		*	*	*	*	*	FMCLXN
CE11		*	*		*				*		AMCVXN
CE31		*	*			*			*		FMCVXN
CE32		*		*		*	*		*		FMCVXN
SE11		*		*	*		*		*		AMCVXN
ME51		*		*	*		*	*	*		AMCVXN
ME32		*		*		*	*	*	*		FMCVXN

NOTE

(1): the auxiliary contact is not a SELV type (Safety Extra Low Voltage, e.g. 24V) , therefore it is not suitable to control SELV circuits.

(2): the controller is in accordance if "EN 298:2003 compliant" is written on its label and the option is marked with #

(3): flame failure during TS causes spark restoration..

TECHNICAL DATA:

Power supply: 230V~ 50/60 Hz
Upon request: 110-120V~ 50/60 Hz
Operating temperature range: -20 °C +60 °C
Humidity : max. 95 % at 40 °C
Protection degree: IP00
Times:
- waiting or pre-purge time **(TW):** 1,5…60 s
- start-up safety time **(TS):** 1,5…60 s
- response time in case of flame failure: ≤ 1 s

The times given on the controller label correspond to the guaranteed values. The actual values can differ slightly from the declared ones, pre-purge and waiting times can be longer and safety time shorter than their nominal values.

Start-up power consumption:
- versions without fan 10 VA
- versions with fan 12 VA

Operating power consumption
- versions without fan 7 VA
- versions with fan 9 VA

Max. contact ratings: Imax
- Thermostat: 4 A cos φ = 0.4
- VG1: 0.5 A cos φ = 0.4
- VG2: 0.5 A cos φ = 0.4
- Fan: 1 A cos φ = 0.4
- Lockout signal: 0.5 A cos φ = 1
- Auxiliary contact: 0.5 A cos φ = 0.4

Maximum length of external components cables 1 m
Internal fuse: 4 A time-delay
Internal fuse (versions opt. #): 5 A time-delay
External fuse: 3.15 A fast-blow

Flame control:

The flame detection device makes use of the flame rectification property (ionization); this device is not supplied with protective impedance, therefore the detection electrode is not safe to touch.
- Minimum ionization current: 1.2 μA
Upon request: 0.5 μA
-Recommended ionization current: 3÷5 times the minimum ionization current
- Cable maximum length : 1 m
- Minimum insulation resistance of cable and detection electrode to earth: ≥ 50 MΩ
- Max. parasitic capacitance of electrode: ≤ 1nF
- Max. short circuit current: < 200 μA AC
- Max. ionization current (230 V 50 Hz): 8μA DC

Ignition:
- Ignition voltage: 20 kV at 30 pF loading
- Spark repetition rate : 25 Hz
- Max. cable length: 2 m
- Recommended discharge distance : 2-4 mm
- Consumption: 2.5 VA
- Spark energy: 15 mJ

Weight: 200 g

Controllers for special applications:

Upon request it is possible to meet special requirements concerning times, spark repetition rate, minimum ionization current and operating cycle.

CONSTRUCTION

The enclosure made of plastic and self-extinguishing material protects the controller against mechanical damage caused by crash, tempering , dust and dirt of external ambient.

The PCB dimensions have been reduced by means of a module with surface mounted electronic components.

A varistor protects the controller from voltage transients on the mains supply.

An inbuilt fuse protects the controller internal relays in case of short circuit on the outputs (valves, fan and lockout signal); this fuse is not accessible, therefore the controller must be protected externally by a fast-blow fuse suitable to the connected load and never exceeding 3,15A

OVERALL DIMENSIONS

The controllers of the EUROFLAT series can be supplied with different executions but with the same container. The following figure (Fig. 1) shows the overall dimensions of the controllers.

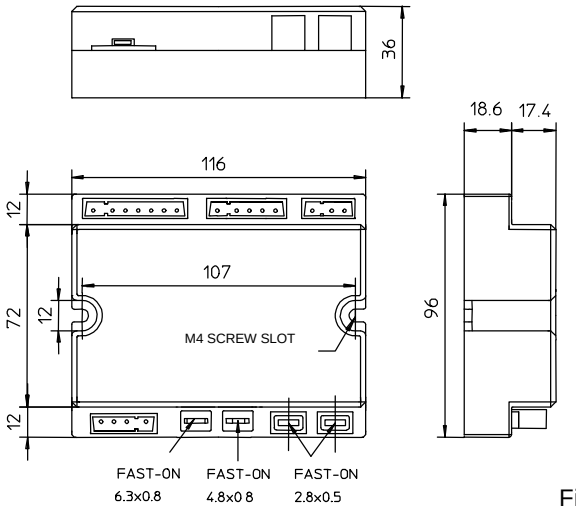

Fig.1

ACCESSORIES

The controllers can be supplied with connectors and/or reset push-button (the push-button is to be fitted to the manual reset versions). Do not fit terminals and female connectors of different marks.
The following accessories (Fig. 2) can be supplied upon request.

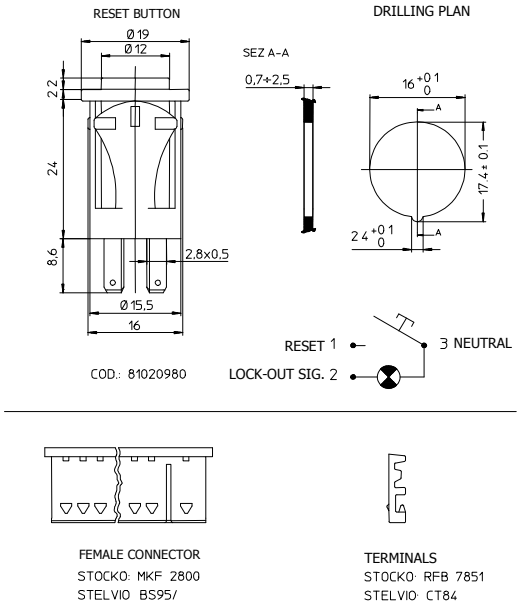

Fig.2

CONNECTION

Using non reversible connectors with different number of poles makes the connection easy and reliable. One way fast-on connectors of different sizes for ignition and detection electrodes permit their easy installation and replacement.
The dual output ignition device allows spark generation on one point (a), two points (b) or between two electrodes isolated from the metal frame of the burner (c), see Fig.3.

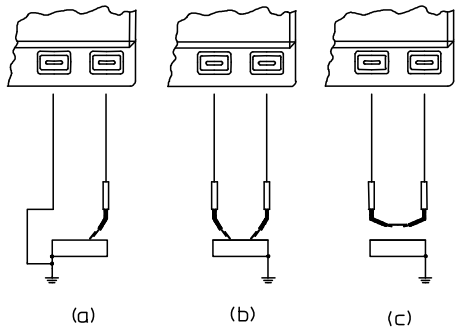

Fig.3

Regarding the controllers connection, strain reliefs and a sufficient number of earth and neutral terminals should be present in the appliance or in external connection boxes.

INSTALLATION DIRECTIONS

- The controllers are safety devices; guarantee and responsibility of the manufacturer will be debarred if the controllers are tempered with by the user.
- A regulation lockout must occur every 24 hours in order to allow the controller to check its efficiency (non-permanent operation systems)
- The controller must be connected and disconnected without power supply.
- The controller can be mounted in any position.
- Avoid exposure to dripping water.
- A ventilated installation ambient and a quite low temperature ensure the longest life of the controller.
- Before installing or replacing the controller make sure that its type, code and times are those required.
- The gas appliance in which the controller is installed must provide adequate protection against the risk of electric shock (at least IP20)

ELECTRICAL INSTALLATION

- The applicable national regulation and European standards (Ex. EN 60335-1/ EN 50165) regarding electrical safety must be respected.
- Live and neutral should be connected correctly, a mistake could cause dangerous condition, i.e. internal and external protection and safety devices could be inefficient in case thermostats and valves connection cables lose the insulation. Besides, if live-neutral polarity is not respected the controller goes to lockout at the end of safety time.
- Check cables carefully before starting the system; wrong connections can damage the controller and compromise safety.
- The earth terminal of the controller, the metal frame of the burner and the earth on the mains supply must be well connected.
- Take great care while connecting lockout signal and reset button: inverted connections can damage the controller.
- Avoid putting the detection cable close to power or ignition cables.
- Use a heat resistant detection electrode well insulated to ground and protected from possible moisture (or water in general).
- Use an ignition cable as short and straight as possible and keep it far from other conductors to reduce the emission of electromagnetic interference (max. length < 2m and insulation voltage >25 kV).

In case of live-neutral networks with unearthed neutral or live-live network (with centre of the star not earthed) the controller can operate correctly by means of a built-in resistor; however, with such networks we recommend to use our step-up transformer type AR1 .
In the event of bad insulation between phase(s) and earth the voltage on the detection electrode is reduced until it causes the lockout of the controller.

CHECKING AT START-UP

Always check the controller before the first star-up and also after every overhaul and long period of non operation. Before any ignition attempt make sure that the combustion chamber is free from gas,
then make sure that: :

- If the start-up attempt occurs without gas supply the controller goes to lockout at the end of safety time;
- When gas flow is interrupted (while the controller is in running state) power supply to gas valve/s is interrupted within 1 second and the controller proceeds to lockout after a recycle;
- Operating times and cycle are in compliance with the ones declared for the type of the used controller;
- The level of the flame signal is sufficient, see Fig. 4 for the measuring test;
- The ignition electrodes are adjusted in the most stable way for a 2-4 mm air spark gap;
- The intervention of regulators, limiters or safety devices causes a shut down of the controller according to the application type.

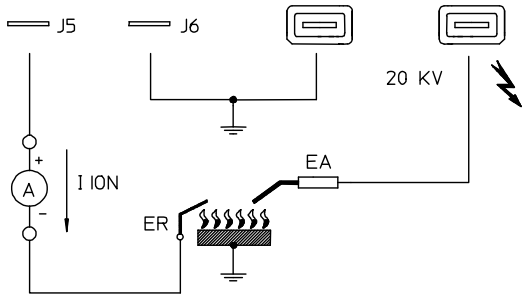

Fig.4

OPERATION

At every start the controller proceeds to a self-checking of its own components. During the pre-purge or waiting time (TW) the internal circuit makes a test of the flame signal amplifier. A parasitic flame signal or fault in the amplifier prevents the controller from starting.
In the types with fan control, before pre-purge time starts, the controller checks that the air pressure switch contact is in the "no air flow" state. Only if the test is positive the fan is energized and, with the air pressure switch in "air flow" state, pre-purge time begins.
At the end of the waiting or pre-purge time the gas valve is power supplied and the ignition device is energized and thus the safety time (TS) begins. If a flame is detected during the safety time the ignition device is inhibited and, in the models where it is provided, the independent auxiliary contact (or the main valve control) will switch from off to flame detected condition.
If no flame is detected within safety time, the controller proceeds to lock-out at the end of TS and so the gas valve and the ignition device are switched off while the lock-out signal output is power supplied.
When the flame fails during safety time, the ignition device is activated within one second.
The following diagrams are useful to understand how each controller operates.

CONTROLLER RESET

In the manual reset versions when a controller has gone to lockout, a 10 seconds interval should be allowed before attempting to reset; if this time is not observed then it's not possible to reset the system.
In general, the reset button must be in sight and in the near vicinity of the appliance. Resetting can occur by means of a conscious manual action and not by means of automatic devices like thermostats or timers.
It is allowed to combine the reset button together with the main switch on the appliance. In this case a light alarm will have to be installed.
In the electric reset versions, the controller reset is accomplished by interrupting and then restoring the power supply. The independent manual reset function is not included in these models; therefore they must be used only in the appliances where resetting through shut off is allowed by the European standards.

CONTROLLERS DENOMINATION

Type Options

(1) (2) (3) (4) OPT. (5) (6) (7) (8) (9)

Type

(1) - **C:** Separate ignition and detection electrodes .
S: Separate ignition and detection electrodes and auxiliary contact control.
M: One electrode for ignition and flame detection.
(2) - **M:** Manual reset by means of RESET button.
E: Electric reset (operation restoring by interrupting power supply).
(3) - **1:** Version without fan (for "open combustion chamber" applications).
3: Version with fan (for "closed combustion chamber" applications).
5: Version with one electrode for ignition and flame detection, without fan and auxiliary contact control.
(4) - **1:** Version with control of only one valve or valve plus auxiliary contact.
2: Version with 2 valves control.

Options

(5) - **#:** Versions in compliance with EN298:2003 (only for XMXX versions).
(6) - ***:** Special versions. Apply to our commercial offices for special requirements.
(7) - **P:** Protection against connection inversion of air pressure switch (only for XX3X versions).
(8) - **A:** Versions with increased output voltage of the ignition device .
(9) - **S:** Versions with reduced discharge frequency of the ignition device.

Example:

CM32 opt. #

C	Separate ignition and flame detection electrodes
M	Manual reset by means of RESET button
3	Version with fan (for "closed combustion chamber applications")
2	Version with 2 valves control
#	Version in compliance with EN298:2003.

WIRING DIAGRAMS

MANUAL RESET VERSIONS

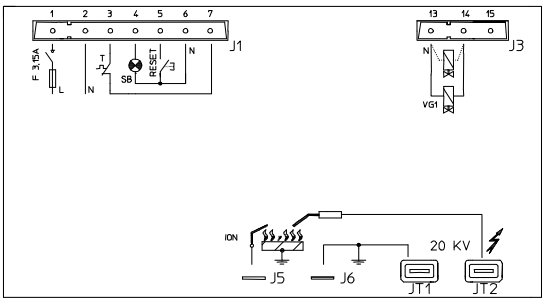

TYPE CM11

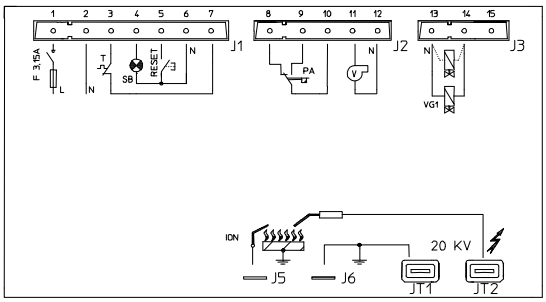

TYPE CM31

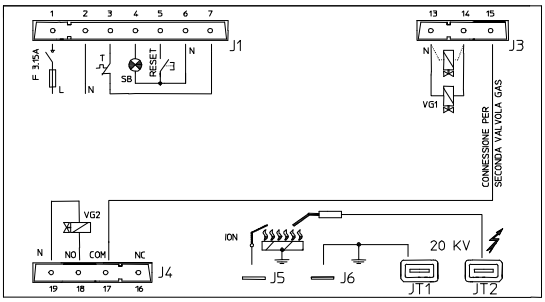

TYPE SM11

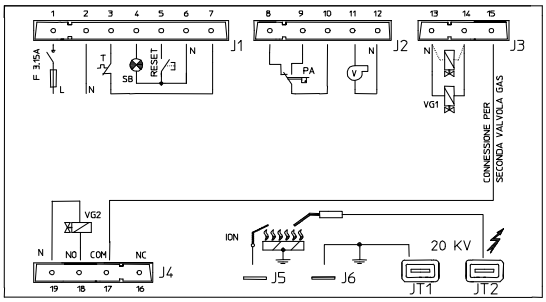

TYPE CM32

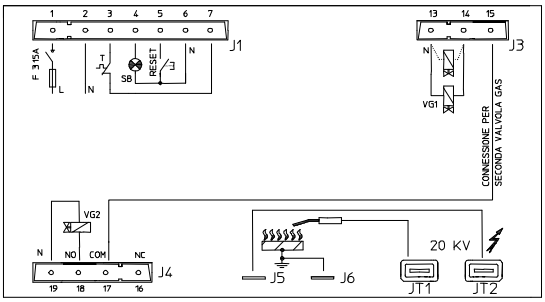

TYPE MM51

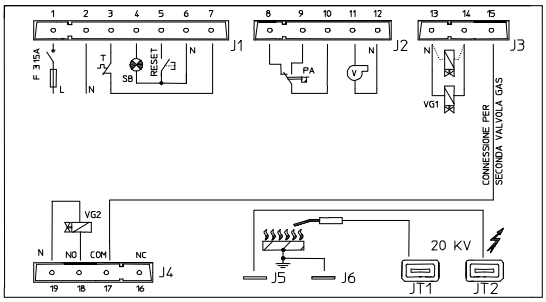

TYPE MM32



THERMOSTAT



FAN



AIR PRESSURE SWITCH



FUSE



BURNER



LOCK OUT SIGNAL



FIRST GAS VALVE



SECOND GAS VALVE

NOTE: Limit thermostat must be connected in series to the live .

ELECTRIC RESET VERSIONS

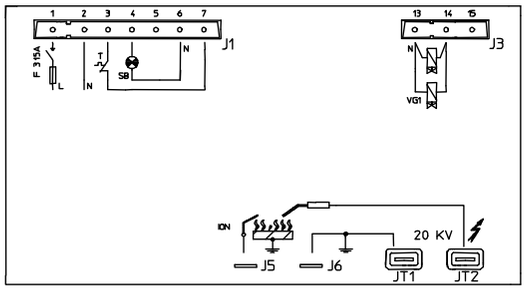

TYPE CE11

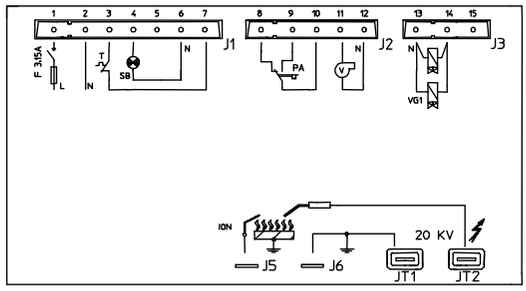

TYPE CE31

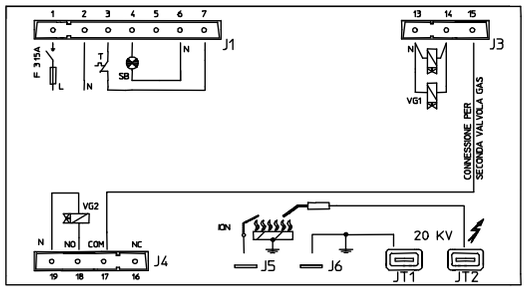

TYPE SE11

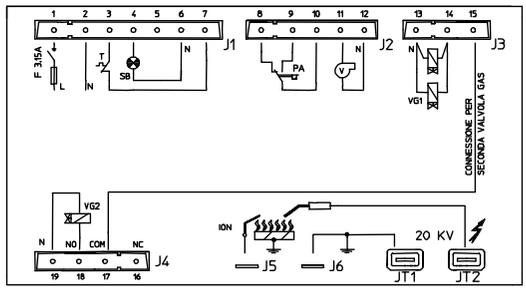

TYPE CE32

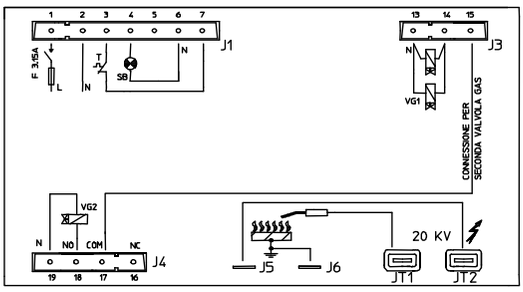

TYPE ME51

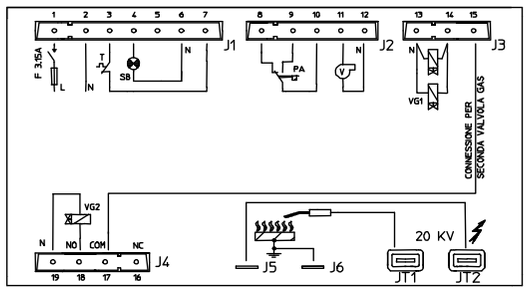

TYPE ME32



THERMOSTAT



FAN



AIR PRESSURE SWITCH



FUSE



BURNER



LOCK OUT SIGNAL



FIRST GAS VALVE



SECOND GAS VALVE

NOTA: Limit thermostat must be connected in series to the live.

ПРОМЭЛЕКТРОНИКА / sales@prom-elec.com

CYCLE DIAGRAMS

MANUAL RESET VERSION

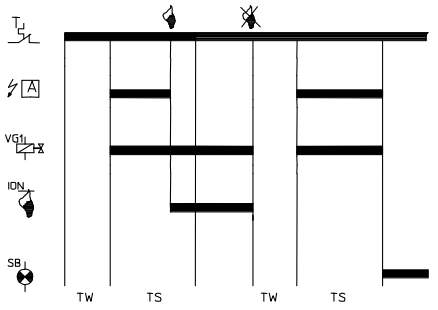

TYPE CM11

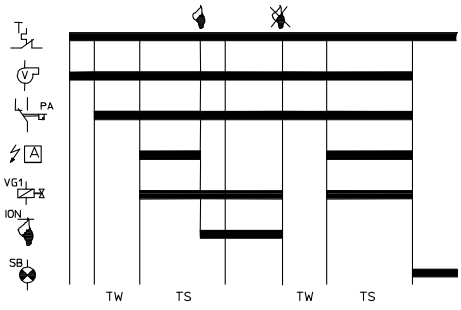

TYPE CM31

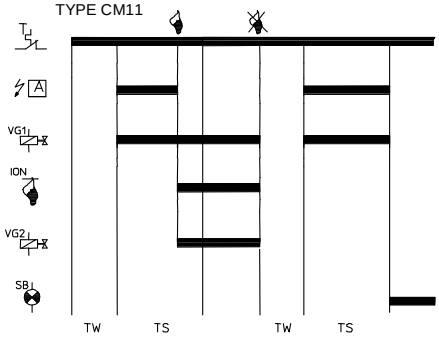

TYPE SM11 MM51

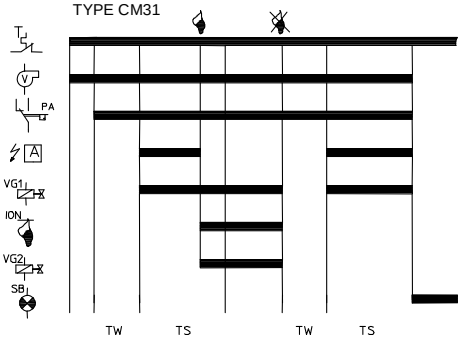

TYPE CM32 MM32

ELECTRIC RESET VERSION

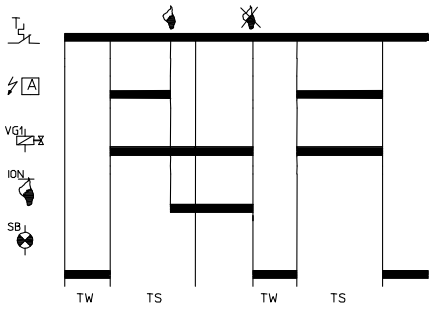

TYPE CE11

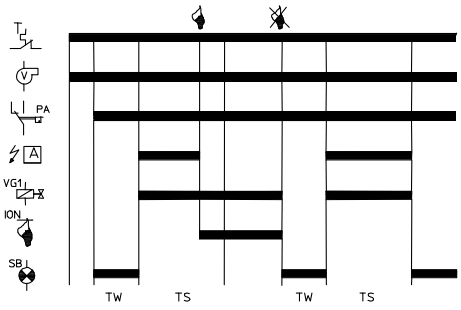

TYPE CE31

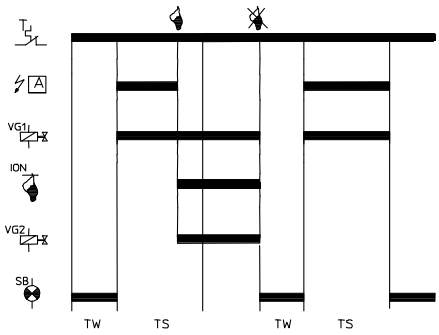

TYPE SE11 ME51

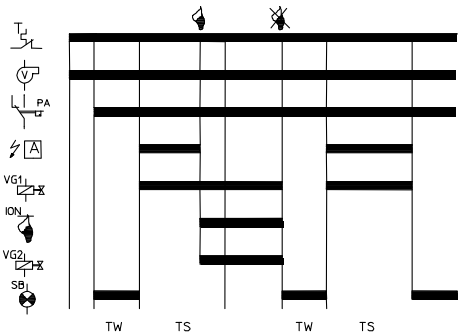

TYPE CE32 ME32

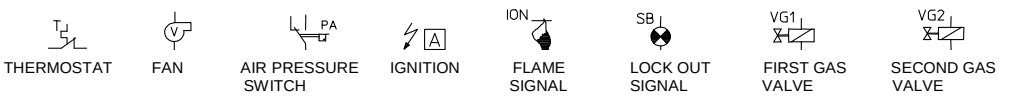

ATTENTION -> Company Brahma S.p.A. declines any responsibility for any damage resulting from the Customer's interfering with the device.

BRAHMA SpA
Via del Pontiere,31
37045 Legnago (Vr)
Tel. +39 0442 635211 – Telefax +39 0442 25683
http:// www.brahma.it
E – mail: brahma @ brahma.it

08/02/14 Subject to amendments without notice