Bruciatore di gasolio • Gas oil burner • Brûleur fioul domestique • Ölbrenner • Oliebrander

Gulliver RG1RK COD. 3736200 - 3736210 TIPO / TYPE / TYP 362 T1

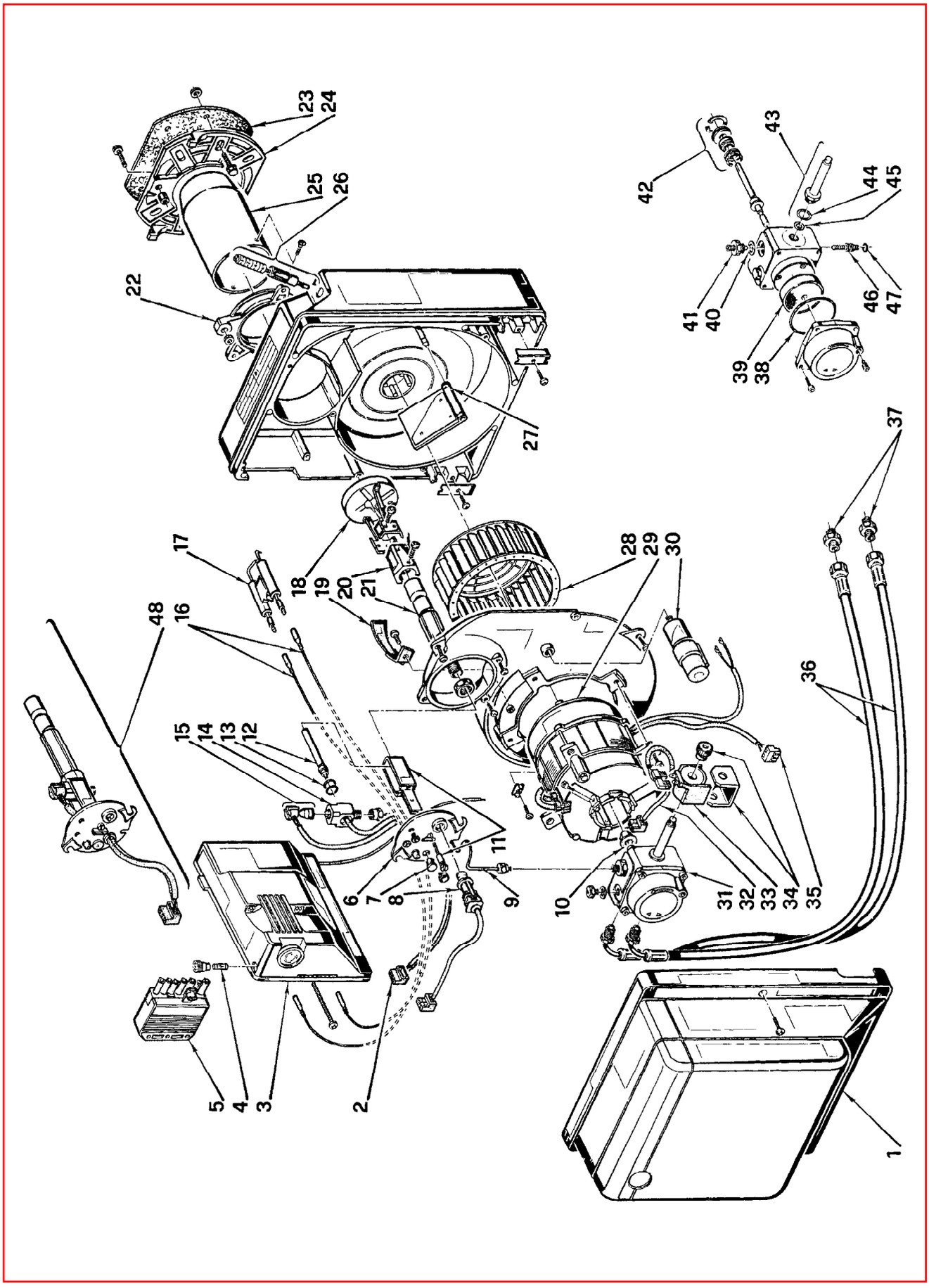

2907143 - 04/98

ПРОМЭЛЕКТРОНИКА / sales@prom-elec.com

N.	COD.	DESCRIZIONE	DESCRIPTION	DESCRIPTION	BESCHREIBUNG	BENAMING	MATRICOLA BRUCIATORE BURNER SERIAL NUMBER MATRICULE BRULEUR BRENNER KENN-NUMMER REGISTRATIENR. BRANDER
1	**3008080**	COFANO	COVER	CAPOT	VERKLEIDUNG	BRANDERKAP	
2	**3007456**	PRESA (Termostato/PTC)	SOCKET (Thermostat/PTC)	PRISE (Thermostat/PTC)	STECKDOSE (Therm./PTC)	VR. STEKKER (Therm./PTC)	
3	**3001175**	APPARECCHIATURA 553SE	CONTROL BOX 553SE	BOITE DE CONTROLE 553SE	STEUERGERÄT 553SE	CONTROLEDOOS 553SE	
4	**3007396**	FUSIBILE	FUSE	FUSIBLE	SCHMELZSICHERUNG	ZEKERING	
5	**3006937**	SPINA A 7 POLI	7 PIN PLUG	FICHE 7 POLES	7 - POLIGER STECKER	7 - POLIGE STEKKER	
6	**3007510**	COPERCHIO	COVER	COUVERCLE	DECKEL	DEKSEL	
7	**3007458**	VETRINO	VIEWING PORT	REGARD	SCHAUGLAS	KIJKGLAS	
8	**3007839**	FOTORESISTENZA	P. E. CELL	CELLULE PHOTORESIST.	FOTOWIDERSTAND	FOTOCEL	
9	**3007511**	TUBO	TUBE	TUYAU	DRUCKROHR	DRUKLEIDING	
10	**3000443**	GIUNTO	JOINT	ACCOUPLEMENT	KUPPLUNG	KOPPELING	
11	**3007512**	STAFFA E VITE	BRACKET AND SCREW	SUPPORT ET VIS	TRAGBÜGEL UND SCHRAUBE	DRAAGBEUGEL EN SCHROEF	
12	**3007464**	RISCALDATORE PTC	HEATER PTC	RECHAUFFEUR PTC	PTC ERHITZER	PTC VERWARMER	
13	**3007172**	ANELLO OR	O - RING	JOINT TORIQUE	O - RING	DICHTING O - RING	
14	**3007463**	RACCORDO	CONNECTOR	MAMELON	NIPPEL	NIPPEL	
15	**3007462**	TERMOSTATO	THERMOSTAT	THERMOSTAT	THERMOSTAT	THERMOSTAAT	
16	**3007465**	COLLEGAMENTO A.T.	HIGH VOLTAGE LEAD	CABLE HAUTE TENSION	ZÜNDKABEL	HOOGSPANNINGSKABEL	
17	**3007513**	GRUPPO ELETTRODI	ELECTRODE ASSEMBLY	GROUPE ELECTRODES	ELEKTRODESYSTEM	ELECTRODENGROEP	
18	**3007514**	ELICA	DIFFUSER DISC	ACCROCHE FLAMME	STAUSCHEIBE	VLAMHOUDER	
19	**3007475**	CONVOGLIATORE	SUCTION DUCT	CONVOYEUR D'AIR	ANSAUGÖFFNUNG	LUCHTGELEIDER	
20	**3006276**	SUPPORTINO	SUPPORT	SUPPORT	HALTERUNG	BEUGEL	
21	**3007467**	PORTAUGELLO	NOZZLE HOLDER	PORTE GICLEUR	DÜSENSTOCK	SPROEIERHOUDER	
22	**3007515**	COLLARE	COLLAR	COLLIER	INNERER FLANSCH	TEGENFLENS	
23	**3005787**	SCHERMO	GASKET	JOINT	DICHTUNG	DICHTING	
24	**3008636**	FLANGIA	FLANGE	BRIDE	FLANSCH	FLENS	
25	**3007516**	BOCCAGLIO	BLAST TUBE	GUEULARD	BRENNERROHR	BRANDERKOP	
26	**3007517**	REGOLATORE SERRANDA	AIR DAMPER REGULATOR	SYSTEME REGLAGE D'AIR	LUFTKLAPPENREGLER	LUCHTREGELINGSYSTEEM	
27	**3007519**	ERRANDA	AIR DAMPER	VOLET AIR	LUFTKLAPPE	LUCHTKLEP	
28	**3007476**	GIRANTE	FAN	VENTILATEUR	GEBLÄSERAD	VENTILATOR	
29	**3008489**	MOTORE	MOTOR	MOTEUR	MOTOR	MOTOR	
30	**3007479**	CONDENSATORE 4 μF	CAPACITOR 4 μF	CONDENSATEUR 4 μF	KONDENSATOR 4 μF	CONDENSATOR 4 μF	
31	**3007771**	POMPA	PUMP	POMPE	PUMPE	POMP	
32	**3007772**	COLLEGAMENTO	LEAD	CABLE DE CONNEXION	VERBINDUNG	VERBINDINGSKABEL	
33	**3007565**	BOBINA	COIL	BOBINE	MV SPULE	SPOEL	
34	**3007566**	MANTELLO E POMELLO	SHELL AND KNOB	ETRIER ET ECROU	BÜGEL UND KNOPF	BEUGEL EN MOER	
35	**3007454**	PRESA (Motore)	SOCKET (Motor)	PRISE (Moteur)	STECKDOSE (Motor)	STOPCONTACT (Motor)	
36	**3005720**	TUBO FLESSIBILE	FLEXIBLE OIL LINE	FLEXIBLE	SCHLAUCH	FLEXIBEL	
37	**3009068**	RACCORDO	CONNECTOR	MAMELON	NIPPEL	NIPPEL	
38	**3007162**	ANELLO OR	O - RING	JOINT TORIQUE	O - RING	DICHTING O - RING	
39	**3005719**	FILTRO	FILTER	FILTRE	FILTER	FILTER	
40	**3007087**	GUARNIZIONE	SEAL	JOINT	DICHTUNG	PAKKING	
41	**3007268**	RACCORDO	CONNECTOR	MAMELON	NIPPEL	NIPPEL	
42	**3000439**	ORGANO DI TENUTA	PUMP SEAL	ORGANE D'ETANCHEITE	WELLENDICHTUNG	ASDICHTING	
43	**3007582**	VALVOLA	NEEDLE VALVE	VALVE	NADELVENTIL	VENTIEL	
44	**3007173**	ANELLO OR	O - RING	JOINT TORIQUE	O - RING	DICHTING O - RING	
45	**3007156**	ANELLO OR	O - RING	JOINT TORIQUE	O - RING	DICHTING O - RING	
46	**3007202**	REGOLATORE	REGULATOR	REGULATEUR	REGLER	REGELAAR	
47	**3007028**	ANELLO OR	O - RING	JOINT TORIQUE	O - RING	DICHTING O - RING	

ПРОМЭЛЕКТРОНИКА / sales@prom-elec.com

N.	COD.	DESCRIZIONE	DESCRIPTION	DESCRIPTION	BESCHREIBUNG	BENAMING	MATRICOLA BRUCIATORE BURNER SERIAL NUMBER MATRICULE BRULEUR BRENNER KENN-NUMMER REGISTRATIENR. BRANDER
48	**3007657**	**ASSIEME PORTAUGELLO** Comprende le pos. 2-6-7-11 12-13-14-15-21.	**NOZZLE HOLDER ASSEMBLY** Includes codes: 2-6-7-11-12-13 14-15-21.	**PORTE GICLEUR** Comprend les pos. 2-6-7-11-12 13-14-15-21.	**DÜSENSTOCK** Beinhalter Pos. 2-6-7-11-12-13 14-15-21.	**SPROEIERHOUDER-GROEP** Inclusief pos. 2-6-7-11-12-13 14-15-21.	