Honeywell

RM7885A
7800 SERIES Relay Modules

INSTALLATION INSTRUCTIONS

APPLICATION

The Honeywell RM7885A are microprocessor-based integrated burner controls for semi-automatically fired gas, oil, or combination fuel single burner applications. The RM7885A Relay Modules are intended to replace the R485B Protectorelay™ Primary Control and the R4075C,D,E Industrial Flame Safeguard Primary Controls. The
RM7885A System consists of a relay module, subbase and amplifier. Options include Personal Computer Interface, keyboard display module (KDM), Data ControlBus Module™, remote display mounting, expanded annunciator and Combustion System Manager® Software.

The RM7885A are adaptable to continuous firing, high-low or modulating firing rate for semi-automatic burner sequencing.

This document covers the following modules:

RM7885A1015
RM7885A2015

Functions the RM7885A provide include flame supervision, system status indication, system or self-diagnostics and troubleshooting.

The RM7885A operates with any of the following types of ignition:

1. Torch-ignited main burner using the S445A Start-Stop Station, or any conventional knee- or foot-operated start-stop station.
2. Torch-ignited pilot using the S445A Start-Stop Station, or any conventional knee- or foot-operated start-stop station.
3. Direct-ignition oil burner or electrically-ignited pilot, using the S445A Start-Stop Station, which maintains electric ignition as long as the Start Switch is depressed (up to 15 minutes).

This document provides installation and static checkout instructions. Other applicable publications are:

Form Number	Description
63-2278	Q7700A Network Interface Unit Product Data
65-0084	Q7800A,B 22-Terminal Wiring Subbase Product Data
65-0090	S7800A Keyboard Display Module Product Data.
65-0091	S7810A Data ControlBus Module™ Product Data
65-0095	S7820 Remote Reset Module Product Data
65-0097	221729C Dust Cover Packing Sheet
65-0101	S7830 Expanded Annunciator Product Data
65-0131	221818A Extension Cable Assembly Product Data
65-0229	7800 SERIES RELAY MODULES Checkout and Test
65-0295	NEMA4 covers for 2-line VF KDM, 50023821-001 w/o reset, 50023821-002 with reset
32-00110	4-line LCD KDM S7800A2142
32-00160	Tester for 2000 Series Flame Relays A7800A2010, (accommodates grounding pin)
32-00166	NEMA4 covers for 4-line KDM, 204729A w/o reset, 204729B with reset
32-00235	R7824, R7847, R7848, R7849, R7851, R7861, R7886 Flame Amplifiers for the 7800 SERIES Product Data

SPECIFICATIONS

Electrical Ratings (See Table 3):
Voltage and Frequency:
120 Vac (+10/-15%), 50/60 Hz (± 10%).
Power Dissipation: 10W maximum.
Maximum Total Connected Load: 2000 VA.
Fusing Total Connected Load: 15A maximum, type S/C or equivalent.

SIL3 Capable

32-00215-01

ПРОМЭЛЕКТРОНИКА / sales@prom-elec.com

Environmental Ratings:
Ambient Temperature:
Operating: -40°F to +140°F (-40°C to +60°C).
Storage: -40°F to +150°F (-40°C to +66°C).
Humidity: 85% relative humidity continuous, noncondensing.
Vibration: 0.5G environment.

SIL 3 Capable:
SIL 3 Capable in a properly designed Safety Instrumented System. See form number 65-0312-04 for Certificate Agreement.

Approvals:
cULus Underwriters Laboratories Inc. Listed: File No. MP268. ANSI/UL 60730-2-5 / CSA C22.2 No. 60730-2-5 - Automatic Electrical Controls for Household and Similar Use, Part 2-5: Particular Requirements for Automatic Electrical Burner Control Systems
FM Factory Mutual Approved: Report No. 1V9A0.AF.
EAC TC N RU д-US.Аи30.В.04013
Exida IEC/EN 61508:2010 Parts 1-7, SIL 3 capable.
FCC Federal Communications Commission: Part 15, Class B, Emissions.
Swiss Re (formerly Industrial Risk Insurers): Acceptable.

INSTALLATION

When Installing this Product...

1. Read these instructions carefully. Failure to follow them could damage the product or cause a hazardous condition.
2. Check the ratings given in the instructions and marked on the product to make sure the product is suitable for the application.
3. Installer must be a trained, experienced, flame safeguard service technician.
4. After installation is complete, check out the product operation as provided in these instructions.

⚠ WARNING
Fire or Explosion Hazard.
Can cause severe injury, death or property damage.
Verify safety requirements when installing a control on a burner.

⚠ WARNING
Electrical Shock Hazard or Equipment Damage.
Can cause severe injury, death or equipment damage.
Disconnect power supply before beginning installation.

IMPORTANT

1. *Wiring connections for the relay modules are unique; refer to Fig. 2 or the appropriate Specifications for proper subbase wiring.*
2. *Wiring must comply with all applicable codes, ordinances and regulations.*
3. *Wiring must comply with NEC Class 1 (Line Voltage) wiring.*
4. *Loads connected to the RM7885A must not exceed those listed on the RM7885A label or the Specifications; see Table 1.*
5. *Limits and interlocks must be rated to simultaneously carry and break current to the ignition transformer, pilot valve, and main fuel valve(s).*
6. *All external timers must be listed or component-recognized by authorities who have proper jurisdiction.*
7. *For on-off gas-fired systems, some authorities who have jurisdiction prohibit the wiring of any limit or operating contacts in series between the flame safeguard control and the main fuel valve(s).*
8. *Two flame detectors can be connected in parallel with the exception of Infrared Flame Detectors (C7015).*
9. *This equipment generates, uses and can radiate radio frequency energy and, if not installed and used in accordance with the instructions, can cause interference with radio communications. It has been tested and found to comply with the limits for a*
   Class B computing device of Part 15 of FCC rules, which are designed to provide reasonable protection against such interference when operated in a commercial environment. Operation of this equipment in a residential area can cause interference, in which case, the users, at their own expense, may be required to take whatever measures are required to correct this interference.
10. *This digital apparatus does not exceed the Class B limits for radio noise for digital apparatus set out in the Radio Interference Regulations of the Canadian Department of Communications.*

Location

Humidity

Install the relay module where the relative humidity never reaches the saturation point. The relay module is designed to operate in a maximum 85% relative humidity continuous, noncondensing, moisture environment. Condensing moisture can cause a safety shutdown.

Vibration

Do not install the relay module where it can be subjected to vibration in excess of 0.5G continuous maximum vibration.

Weather

The relay module is not designed to be weather tight. When installed outdoors, protect the relay module in an approved weather-tight enclosure.

Mounting of Remote Keyboard or Reset Module

To comply with CE EN60730 for remote mounting of the KDM and/or Remote Reset Module it is necessary to provide electrical separation using insulation at least equivalent to double or reinforced insulation.

This can be accomplished by either:

1. Optically isolating the communication and/or remote reset lines from the control cabinet.
2. Providing physical separation from the communication and/or remote reset lines using electrical conduit and a 204718A Remote Display Cover Assembly or other suitable enclosure that meets IP40 class of protection.

Mounting Wiring Subbase

1. Mount the subbase in any position except horizontally with the bifurcated contacts pointing down. The standard vertical position is recommended. Any other position decreases the maximum ambient temperature rating.
2. Select a location on a wall, burner or electrical panel. The Q7800 can be mounted directly in the control cabinet. Be sure to allow adequate clearance for servicing, installation, access or removal of the RM7885A, expanded annunciator, keyboard display module, flame amplifier, flame amplifier signal voltage probes, run/test switch, electrical signal voltage probes and electrical field connections.
3. For surface mounting, use the back of the subbase as a template to mark the four screw locations. Drill the pilot holes.
4. Securely mount the subbase using four no. 6 screws (not provided).

NOTE: You might receive an error code 101 (via KDM) if one of the following conditions exist:

a. The screws securing the relay to the subbase are not tight enough, re-tighten to insure there is no gap between the relay and the subbase.
b. If you attempt to place a 2000 series relay on a non-compatible 1000 series subbase, this indicates that you must:
   - Change out the subbase to a Q7800A2003/U or Q7800A2005/U
   - Choose a compatible 1000 series relay module

Relay Module and Subbase Compatiblity

NOTE: There are several different subbase models that can be purchased. It is important to note which subbase is compatible with the relay module when purchasing new, repair or replacement parts.

Series 1000 Relay Modules

All relay product codes that start with a 1 (example: EC7820A**1**026/U) can be used with existing subbase Q7800A1003/U and Q7800A1005/U.

Series 2000 Relay Modules

All relay product codes that start with a 2 (example: EC7820A**2**026/U) must be used with subbase Q7800A2003/U and Q7800A2005/U.

Subbase Compatibility

Any Relay Module in the 1000 Series with a Software Revision level number starting with a "5" or greater will be compatible with all subbase models both installed and newly purchased. This includes (Q7800A1005/U, Q7800B1003/U), and the 2000 Series subbases (Q7800A2005/U, Q7800B2003/U).

See Fig. 1 for Software Revision Level number location on the label (located on the rear of the relay module).

Any relay module in the new 2000 series will only be able to be installed on subbase Q7800A2005/U, Q7800B2003/U and will not be backward compatible with any Q7800A1003/U and Q7800A1005/U subbases already installed in the field.



Fig. 1. Software revision location.

IMPORTANT

Make sure to check the relay model number and the software revision level on the relay.

If you attempt to place a 2000 series relay on a non-compatible 1000 series subbase, you will receive an error code of 101. This indicates that you must a) change out the subbase to a Q7800A2003/U or Q7800A2005/U or b) choose a compatible 1000 series relay module.

Wiring Subbase

⚠ WARNING

Electrical Shock Hazard.
Can cause severe injury, death or equipment damage.
Disconnect the power supply before beginning installation.

The internal block diagram of the RM7885A is shown in Fig. 1.

1. For proper subbase wiring and sequence chart, refer to Fig. 2. For other possible wiring hookups, see Fig. 3 through 6.
2. For proper remote wiring of the KDM, refer to the Specifications for the 2-line VDF KDM (65-0090), the 4-line LCD KDM (32-00110), Data ControlBus Module™ (65-0091) or Extension Cable Assembly (65-0131).
3. Disconnect the power supply from the main disconnect before beginning installation to prevent electrical shock and equipment damage. More than one disconnect may be required.
4. All wiring must comply with all applicable electrical codes, ordinances and regulations. Wiring, where required, must comply with NEC, Class 1 (Line Voltage) wiring.
5. For recommended wire size and type, see Table 1.
6. For recommended grounding practices, see Table 2.
7. Recommended wire routing of leadwires:
   a. Do not run high voltage ignition transformer wires in the same conduit with the flame detector, Data ControlBus Module™, or Remote Reset Module wiring.
   b. Do not route flame detector, Data ControlBus Module™ or Remote Reset Module leadwires in conduit with line voltage circuits.
   c. Enclose flame detector leadwires without armor cable in metal cable or conduit.
   d. Follow directions in flame detector, Data ControlBus Module™, or Remote Reset Module Instructions.
8. For KDM, because the KDM is powered from a low voltage, energy limited source, it can be mounted outside of a control panel if it is protected from mechanical damage.

NOTE: A 13 Vdc power supply must be used any time more than one KDM is used. A maximum of two KDM, Data ControlBus[a] Modules or S7810B Multi-Drop Switch Modules are allowed in any combination.

9. Maximum wire lengths:
   a. RM7885A leadwires: The maximum leadwire length is 300 feet (91 meters) to terminal inputs (Control, Preignition Interlock, Running/Lockout Interlock, High Fire Switch and Low Fire Switch).
   b. Flame Detector leadwires: The maximum flame sensor leadwire length is limited by the flame signal strength.
   c. Remote Reset leadwires: The maximum length of wire is 1000 feet (305 meters) to a Remote Reset pushbutton.
   d. Data ControlBus Module[a]: The maximum Data ControlBus Module™ cable length depends on the number of system modules connected, the noise conditions and the cable used. The maximum length of all Data ControlBus Module[a] interconnecting wire is 4000 feet (1219 meters).
10. Be sure loads do not exceed the terminal ratings. Refer to the label on the RM7885A or to the terminal ratings in Table 4.

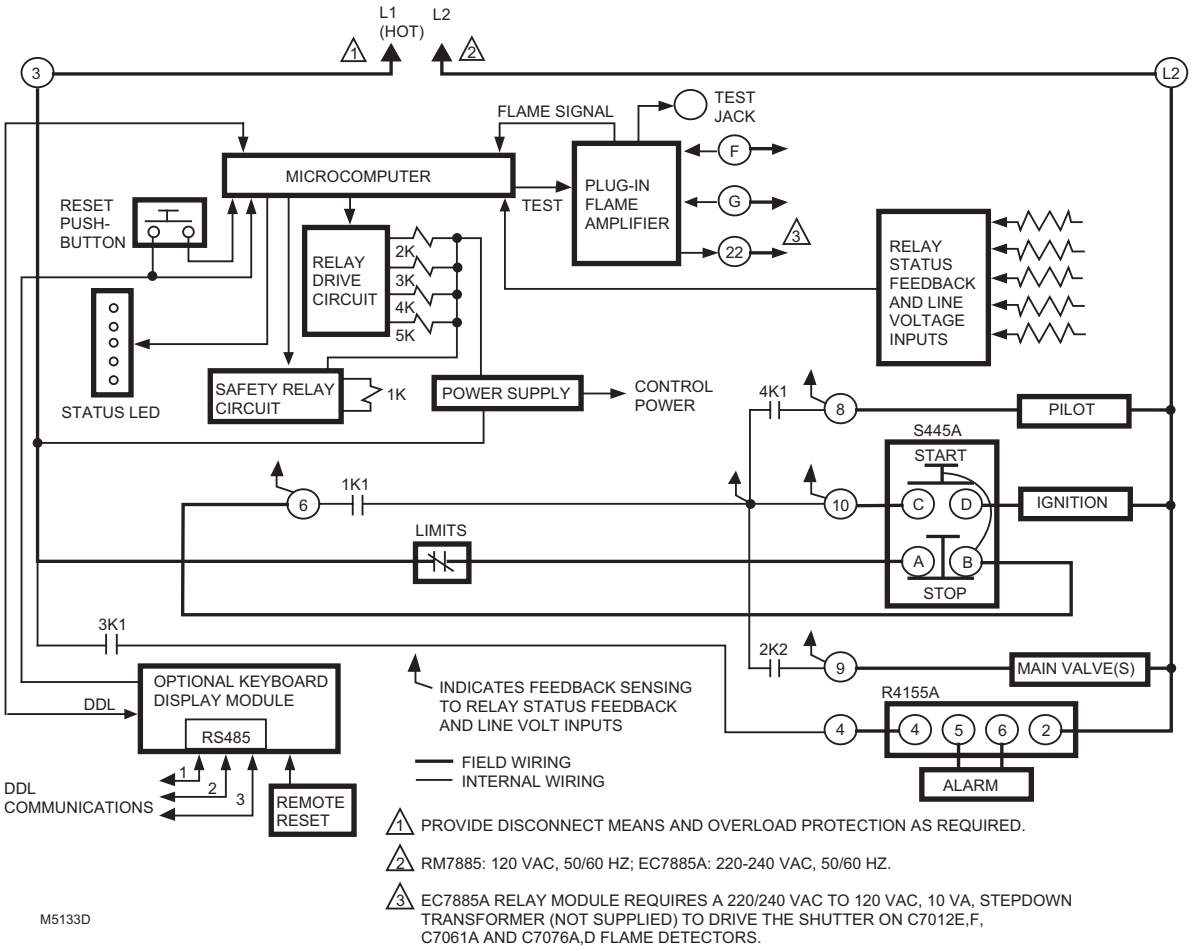

Fig. 2. Internal block diagram of RM7885A (see Fig. 2 through 6 for detailed wiring instructions).

Table 1. Recommended Wire Sizes and Part Numbers.

Application	Recommended Wire Size	Recommended Part Numbers
Line voltage terminals	14, 16, or 18 AWG copper conductor, 600 volt insulation, moisture-resistant wire.	TTW60C, THW75C, THHN90C.
Keyboard Display Module	22 AWG two-wire twisted pair with ground, or five-wire.	Belden 8723 shielded cable or equivalent.
Data ControlBus Module™	22 AWG two-wire twisted pair with ground, or five-wire.	Belden 8723 shielded cable or equivalent.
Remote Reset Module	22 AWG two-wire twisted pair, insulated for low voltage.	—
Communication Interface ControlBus™ Module	22 AWG two-wire twisted pair with ground.	Belden 8723 shielded cable or equivalent.
13 Vdc full-wave rectified transformer power input	18 AWG wire insulated for voltages and temperatures for given application.	TTW60C, THW75C, THHN90C.

The Keyboard Display Module, Data ControlBus Module™ (for remote mounting or communications) or Communication Interface ControlBus Module must be wired in a daisy chain configuration, (1(a)-1(a), 2(b)-2(b), 3(c)-3(c)). The order of interconnection of all the devices listed above is not important. Be aware that modules on the closest and farthest end of the daisy chain configuration string require a 120 ohm (1/4 watt minimum) resistor termination across terminals 1 and 2 of the electrical connectors for connections over 100 feet (31 meters).

Table 2. Recommended Grounding Practices.

Ground Type	Recommended Practice
Earth ground (subbase and relay module).	Use to provide a connection between the subbase and the control panel of the equipment. Earth ground must be capable of conducting enough current to blow the 15A fuse (or breaker) in the event of an internal short circuit. Use wide straps or brackets to provide minimum length, maximum surface area ground conductors. If a leadwire must be used, use 14 AWG copper wire. Make sure that mechanically tightened joints along the ground path are free of nonconducting coatings and protected against corrosion on mating surfaces.
Signal ground (KDM, Data ControlBus Module™, Communications Interface ControlBus Module).	Use the shield of the signal wire to ground the device to the signal ground terminal 3(c) of each device. Connect the shield at both ends of the daisy chain to earth ground.

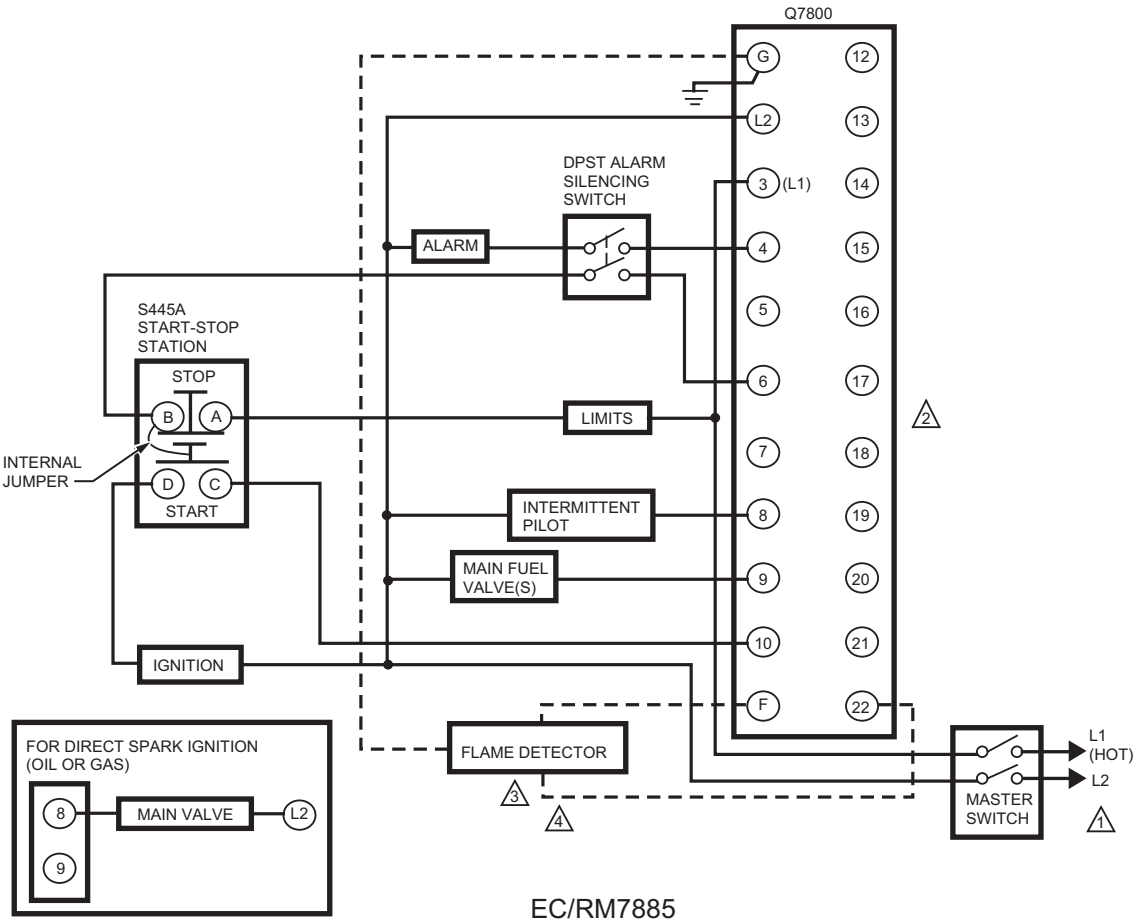

EC/RM7885

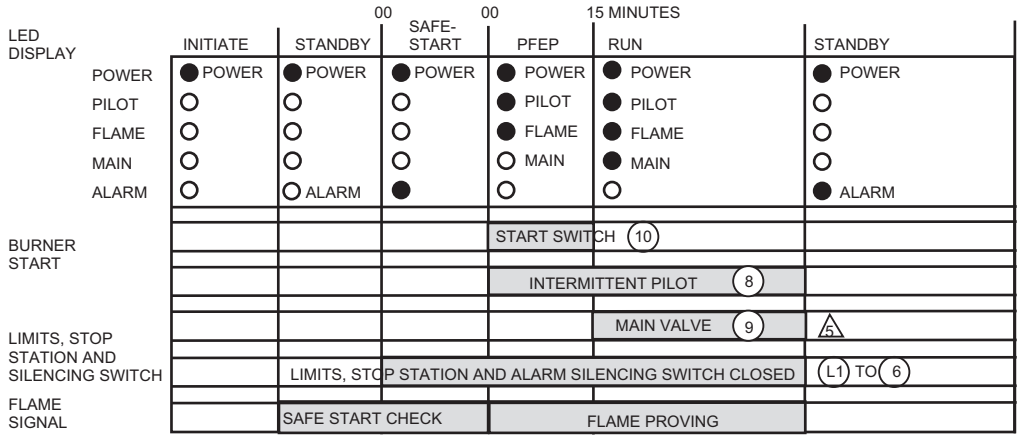

1 RM7785A: 120 VAC, 50/60 HZ; EC7885A: 220-240 VAC, 50/60 HZ POWER SUPPLY. PROVIDE DISCONNECT MEANS AND OVERLOAD PROTECTION AS REQUIRED.

2 DO NOT CONNECT ANY WIRES TO UNUSED TERMINALS.

3 SEE FLAME DETECTOR SPECIFICATION FOR CORRECT WIRING.

4 220-240 VAC TO 120 VAC, 10 VA MINIMUM STEP-DOWN TRANSFORMER (NOT PROVIDED) REQUIRED TO DRIVE SHUTTER (EC7885A ONLY).

5 MAIN FUEL VALVE WILL BE ENERGIZED WHEN FLAME IS PROVEN.

M15109A

Fig. 3. Wiring subbase and sequence chart for RM7885A.

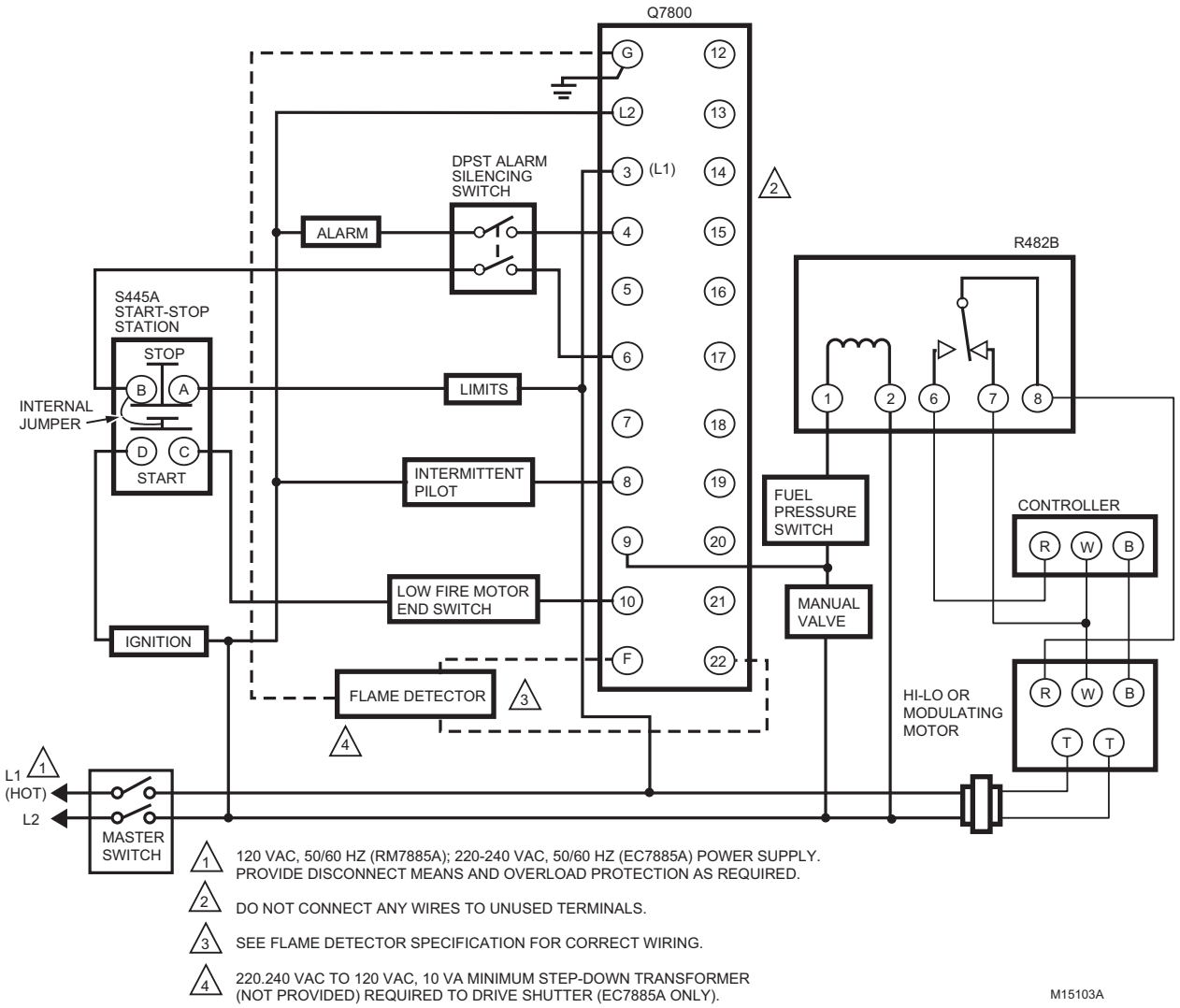

Fig. 4. High-low or modulating burner wiring diagram.

ПРОМЭЛЕКТРОНИКА / sales@prom-elec.com

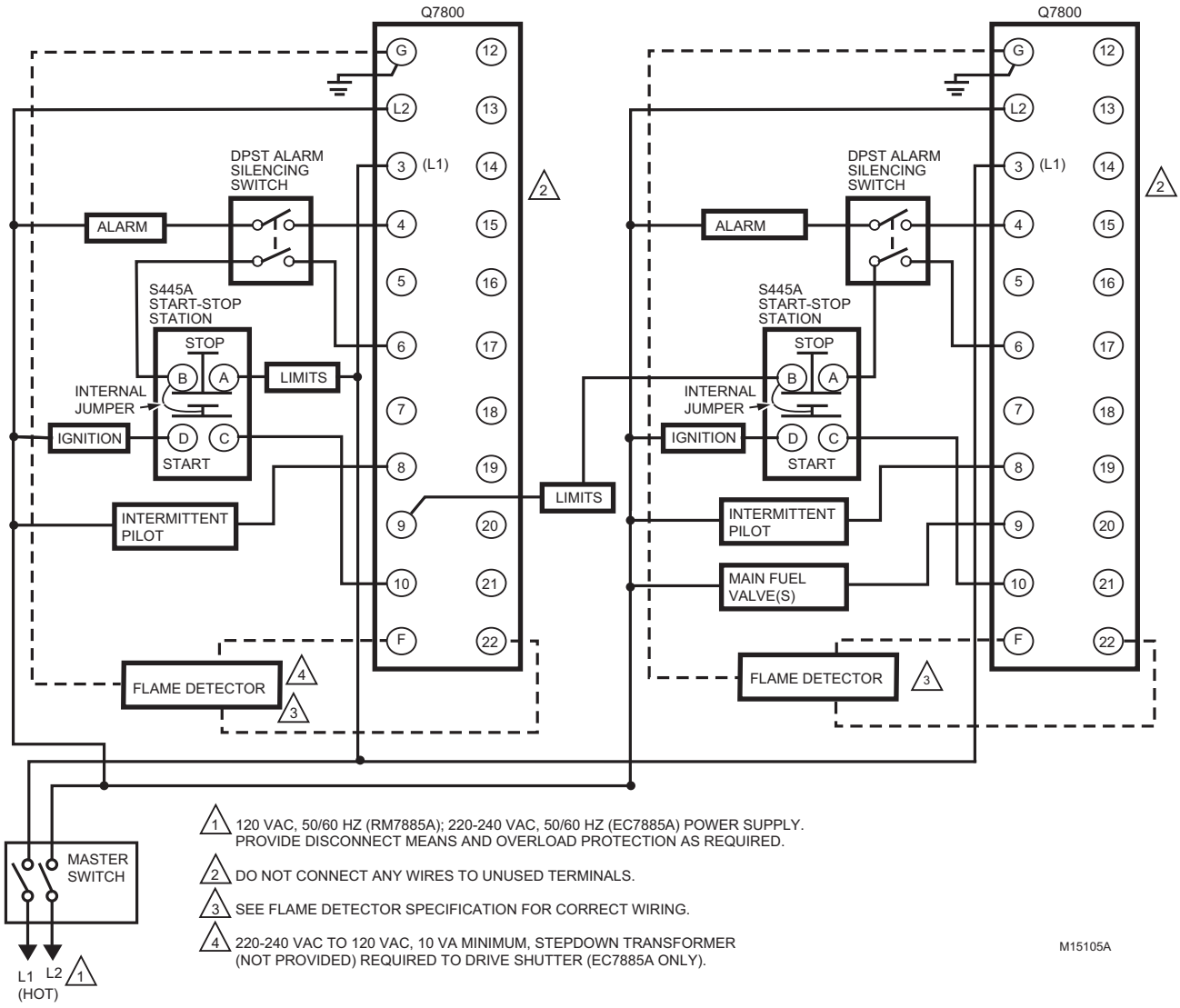

Fig. 5. Cascading two or more burners or supervising two or more pilots when required for safe ignition of one burner.

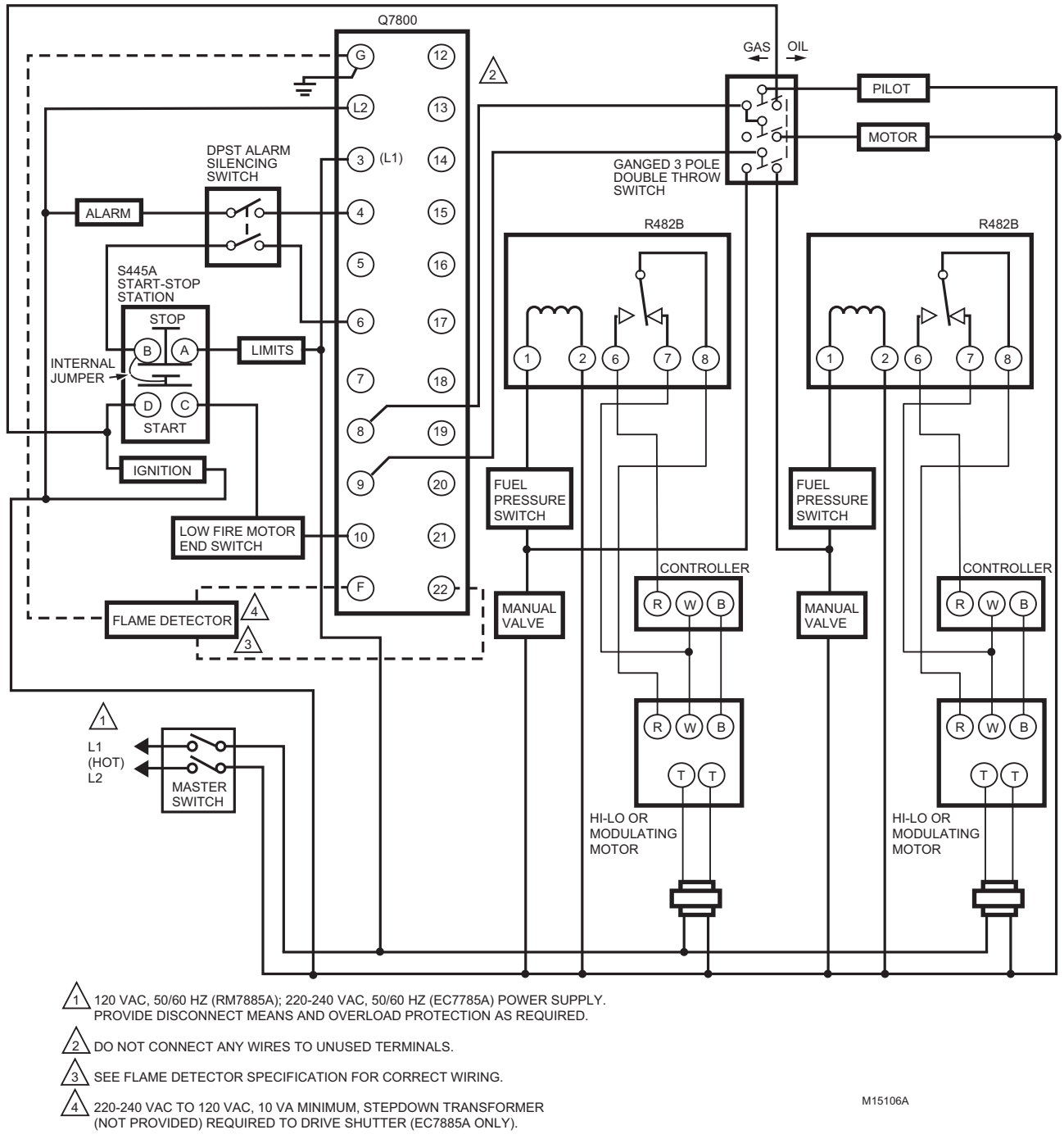

1 120 VAC, 50/60 HZ (RM7885A); 220-240 VAC, 50/60 HZ (EC7785A) POWER SUPPLY. PROVIDE DISCONNECT MEANS AND OVERLOAD PROTECTION AS REQUIRED.

2 DO NOT CONNECT ANY WIRES TO UNUSED TERMINALS.

3 SEE FLAME DETECTOR SPECIFICATION FOR CORRECT WIRING.

4 220-240 VAC TO 120 VAC, 10 VA MINIMUM, STEPDOWN TRANSFORMER (NOT PROVIDED) REQUIRED TO DRIVE SHUTTER (EC7885A ONLY).

Fig. 6. Dual fuel with high-low or modulating burner.

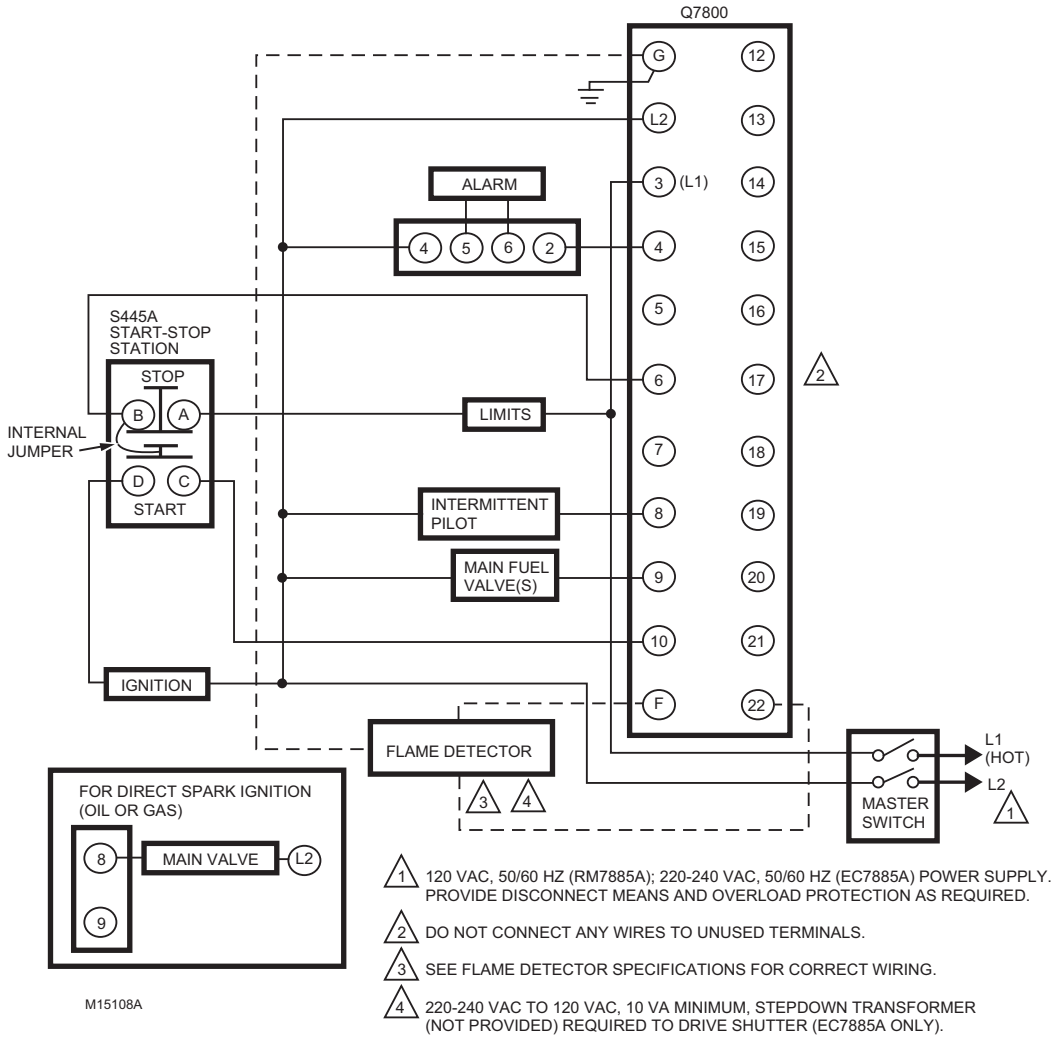

Fig. 7. RM7885A wiring with R4155 alarm silencing relay.

Final Wiring Check

1. Check the power supply circuit. The voltage and frequency tolerance must match those of the RM7885A. A separate power supply circuit may be required for the RM7885A. Add the required disconnect means and overload protection.
2. Check all wiring circuits and complete Static Checkout in Table 3 before installing the RM7885A on the subbase.
3. Install all electrical connectors.
4. Restore panel power.

STATIC CHECKOUT

After checking all wiring, perform this checkout before installing the RM7885A on the subbase. These tests verify that the Q7800 Wiring Subbase is wired correctly, and the external controllers, limits, interlocks, actuators, valves, transformers, motors and other devices are operating properly.

⚠ WARNING

Explosion Hazard.
Can cause severe injury, death, or equipment damage.

1. Close all manual fuel shutoff valve(s) before starting these tests.
2. Use extreme care while testing the system. Line voltage is present on most terminal connections when power is on.
3. Open the master switch before installing or removing a jumper on the subbase.
4. Before continuing to the next test, be sure to remove test jumper(s) used in the previous test.
5. Replace all limits and interlocks that are not operating properly. Do not bypass limits and interlocks.

CAUTION
Electrical Surge Hazard.
Can cause equipment damage.
Do not perform a dielectric test with the RM7885A installed. Internal surge protectors will break down and conduct a current. This can cause the RM7885A to fail the dielectric test or possibly destroy the internal lightning and high current protection.

Equipment Recommended

1. Voltmeter (1M ohm/volt minimum sensitivity) set on the 0 to 300 Vac scale.
2. Two jumper wires, no. 14 wire, insulated, 12 in. (305 mm) long with insulated alligator clips at both ends.

General Instructions

1. Perform all applicable tests listed in Static Checkout, Table 3, in the order listed.
2. Make sure all manual fuel shutoff valve(s) are closed.
3. For each test, open the master switch and install the jumper wire(s) between the subbase wiring terminals listed in the Test Jumpers column.
4. Close the master switch before observing operation.
5. Read the voltage between the subbase wiring terminals listed in the Voltmeter column.
6. If there is no voltage or the operation is abnormal, check the circuits and external devices as described in the last column.
7. Check all wiring for correct connections, tight terminal screws, correct wire, and proper wiring techniques. Replace all damaged or incorrectly sized wires.
8. Replace faulty controllers, limits, interlocks, actuators, valves, transformers, motors and other devices, as required.
9. Make sure normal operation is obtained for each required test before continuing the checkout.
10. After completing each test, be sure to remove the test jumper(s).

WARNING
Explosion Hazard.
Can cause severe injury, death or property damage.
Be sure all manual fuel shutoff valves are closed.

Table 3. Static Checkout.

Test No.	Test Jumpers	Voltmeter	Normal Operation	If Operation is Abnormal, Check These Items
1	—	L2-3	Line Voltage.	**1.** Master switch. **2.** Power connected to the master switch. **3.** Overload protection (fuse, circuit breaker, etc.) has not opened the power line.
2	3-4	—	Alarm sounds.	**1.** Alarm. **2.** Alarm Silencing Switch.
3	— (May need to jumper limits, if used.)	L2-6	Line voltage.	**1.** Limit. **2.** Stop station. **3.** Alarm Silencing Switch.
4	3-8	—	Pilot Valve opens.	**1.** Listen for click or feel head of valve for activation. **2.** Actuator, if used. **3.** Pilot Valve.
5	3-9	—	Main Fuel Valve(s) open(s).	**1.** Listen for click or feel head of valve for activation. **2.** Actuator, if used. **3.** Pilot Valve.
6	3-10	—	Push Start Switch and listen for ignition noise.	**1.** Start Switch. **2.** Ignition transformer.
Final	**CAUTION** **Equipment Damage Hazard.** **Failure to remove test connections can damage equipment.** After completing these tests, open the master switch and remove all test jumpers from the subbase terminals. Remove any bypass jumpers from the low fuel pressure limits.			

Table 4. Terminal Ratings.

Terminal No.	Description	Ratings
G	Flame Sensor Ground	—
Earth G	Earth Ground[a]	—
L2(N)	Line Voltage Common	—
3	Line Voltage Supply (L1)	120 Vac (+10/-15%), 50/60 Hz, ±10%).[b]
4	Alarm	120 Vac, 1A pilot duty.
5	Unused.	—
6	Stop Station	120 Vac,8A run, 43A inrush.
7	Unused	—
8	Pilot Valve	120 Vac.[c]
9	Main Fuel Valve	120 Vac.[c]
10	Start Input	120 Vac.
F(11)	Flame Sensor	60 to 220 Vac, current limited.
12-21	Unused	—
22	Shutter	120 VAc, 0.5A.

[a] See Table 2.

[b] 2000 VA maximum connected load to RM7885A Assembly.

[c] See Tables 5 and 6 for device load combination for terminals 8 and 9.

Table 5. Combination for Terminals 8 and 9.

Combination	Pilot Fuel 8	Main 9
1	B	D
2	A	D
3	D	No Load
4	D	D
5	C	D
6	C	C
7	C	No Load

Table 6. Composition of Each Combination.

A	B	C	D
%0 VA Pilot Duty plus 4.5A ignition.	180 VA ignition plus Motor Valves with: 660 VA inrush, 360 VA open, 250 VA hold.	2A Pilot Duty.	65 VA Pilot Duty plus Motor Valves with: 3850 VA inrush, 700 VA open, 250 VA hold.

Mounting RM7885A Relay Module

1. Mount the RM7885A vertically on the Q7800 Subbase, or mount horizontally with the knife blade terminals pointing down. When mounted on the Q7800A, the RM7885A must be in an electrical enclosure.
2. When mounting in an electrical enclosure, provide adequate clearance for servicing, installation and removal of the RM7885A, KDM, flame amplifier, flame amplifier signal voltage probes, electrical signal voltage probes, and electrical connections.
   a. Allow an additional two inches (51 mm) below the RM7885A for the flame amplifier mounting.
   b. Allow an optional three-inch (76 mm) minimum to both sides of the RM7885A for electrical signal voltage probes.
3. Make sure no subbase wiring is projecting beyond the terminal blocks. Tuck in wiring against the back of the subbase so it does not interfere with the knife blade terminals or bifurcated contacts.

IMPORTANT

The RM7885A must be installed with a plug-in motion rather than a hinge action.

4. Mount the RM7885A by aligning the four L-shaped corner guides and knife blade terminals with the bifurcated contacts on the wiring subbase and securely tightening the two screws without deforming the plastic.

Mounting Other System Components (Fig. 7)

Refer to the applicable specifications for mounting other system components.

PRINCIPAL TECHNICAL FEATURES

The RM7885A provides all customary flame safeguard functions as well as significant advancements in safety, annunciation, and system diagnostics.

Safety Shutdown (Lockout) Occurs If:

1. INITIATE Period:
   a. AC line power errors occurred, see Operation.
   b. Four minute INITIATE period has been exceeded.
2. STANDBY Period:
   a. Flame signal is present after 40 seconds.
   b. Intermittent pilot valve terminal is energized.
   c. Main valve terminal is energized.
   d. Internal system fault occurred.
3. SAFE START CHECK:
   a. Flame signal is present.
   b. Intermittent pilot valve terminal is energized.
   c. Main valve terminal is energized.
   d. Internal system fault occurred.
4. IGNITION Period:
   a. Intermittent pilot valve terminal is not energized.
   b. Start Switch is energized longer than 15 minutes.
   c. Main valve terminal is energized.
   d. Internal system fault occurred.
5. RUN Period:
   a. No flame is present.
   b. Pilot valve terminal is not energized.
   c. Main valve terminal is not energized.
   d. Internal system fault occurred.

OPERATION

Sequence of Operation

The RM7885A has the operating sequences listed below; see Fig. 2. The RM7885A LEDs provide positive visual indication of the program sequence: POWER, PILOT, FLAME, MAIN and ALARM.

NOTE: The alarm will sound until a flame is sensed.

Initiate

The RM7885A enters the INITIATE sequence when the relay module is initially powered. The RM7885A can also enter the INITIATE sequence if the relay module verifies voltage fluctuations of +10/-15% or frequency fluctuations of ±10% during any part of the operating sequence. The INITIATE sequence lasts for ten seconds unless the voltage or frequency tolerances are not met. When not met, a hold condition is initiated and displayed on the optional KDM for at least five seconds; when met, the INITIATE sequence restarts. If the condition is not corrected and the hold condition exists for four minutes, the RM7885A locks out. Causes for hold conditions in the INITIATE sequence:

a. AC line dropout detection.
b. AC line noise that can prevent a sufficient reading of the line voltage inputs.
c. Brownouts caused by a low line voltage.
d. Line frequency out of range.

Standby

The RM7885A is in the STANDBY mode after completing the INITIATE startup or when the Stop Switch is pressed. The POWER LED blinks every four seconds, signifying that an internal hardware check is completed. The alarm LED is also lit and the external alarm (if used) is activated.

Normal Start-Up

When the Start Switch is pressed, the ignition transformer is energized and power is applied to terminal 10 of the relay module. If all microprocessor monitored circuits are in the correct state, the relay module starts a Safe Start Check and Ignition Trials.

Safe Start Check (Two Seconds)

The RM7885A conducts a two-second Safe Start Check and verifies that critical loads are in the proper state prior to startup and that no flame is present in the combustion chamber.

Ignition Trials

Following the Safe Start Check, the RM7885A provides power to the Intermittent Pilot Valve, terminal 8, and turns on the PILOT LED. When flame is proven, the FLAME LED lights, the ALARM LED turns off, and the relay module turns on the Main Valve and the MAIN LED. The Start Switch can be released, which shuts off the ignition transformer.

NOTE: The Pilot Valve follows the Start Switch until the flame is proven. Then it controls the RM7885A (for example, pushing and releasing the Start Switch turns on and off the ignition transformer and the pilot valve until the flame is proven). Not releasing the Start Switch causes a shutdown after 15 minutes.

Run

The RM7885A is now in RUN and remains in RUN until the Stop Switch is pressed or a limit opens terminal 6.

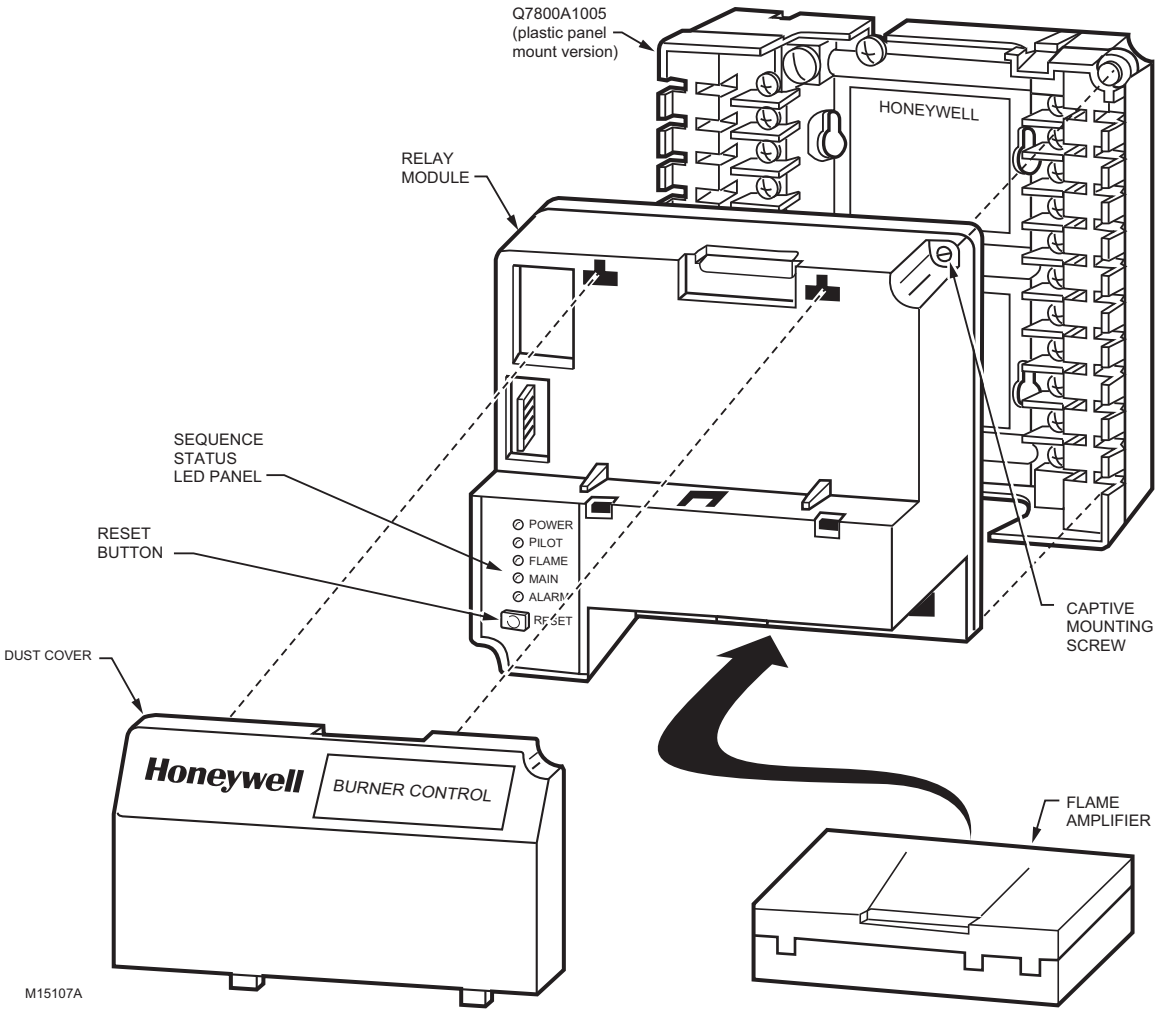

Fig. 8. RM7885A Relay Module exploded view.

SAFETY AND SECURITY

Physical device protection

Device shall be accessible to authorized personnel only – Installation on publicly accessible places is not recommended as this could lead to unwanted and potentially unsafe changes to device (wiring, configuration, etc).

It is recommended to lock the device in an enclosed cabinet with access allowed only to approved and trained personnel. Also, it is strongly advised to keep all the wiring of device physically secure.

Physical protection of the device is applied via Run/Test switch label/seal. It is intended to prevent and detect unauthorized access.

Modbus & DDL Interface security

Any conducts critical to device functionality (DDL, Modbus lines etc.) shall be physically protected (installed outside public access) since they could be damaged or tampered-with by unauthorized people, either accidentally or for purpose.

Modbus RS-485 & DDL protocols do not support security features. For DDL interface - only DDL devices shall be connected to the Burner Controller DDL line.

License agreement

Copying and reverse engineering is prohibited by the law.

For More Information

The Honeywell Thermal Solutions family of products includes Honeywell Combustion Safety, Eclipse, Exothermics, Hauck, Kromschröder and Maxon. To learn more about our products, visit ThermalSolutions.honeywell.com or contact your Honeywell Sales Engineer.

Honeywell Process Solutions

Honeywell Thermal Solutions (HTS)
1250 West Sam Houston Parkway
South Houston, TX 77042
ThermalSolutions.honeywell

Honeywell

® U.S. Registered Trademark
© 2019 Honeywell International Inc.
32-00215—01 M.S. 08-19
Printed in Mexico